ROCKLAND COUNTY
SOLID WASTE MANAGEMENT AUTHORITY
"ROCKLAND GREEN"
172 Main Street
Nanuet, NY 10954

REQUEST FOR PROPOSALS

REBID

RFP 2025-02

FOR THE RENOVATION OF ROCKLAND GREEN ADMINISTRATIVE HEADQUARTERS AND CONSTRUCTION OF AN IMMERSIVE THEATRE EXPERIENCE AT 172 MAIN STREET IN NANUET, NY 10954

May 5, 2025

RECEIPT CONFIRMATION

(This form must be completed by each member of the Proposer team and returned to Rockland Green within 5 days of Proposer's receipt of this RFP)

PLEASE COMPLETE AND RETURN THIS CONFIRMATION FORM BY EMAIL WITHIN 5 WORKING DAYS OF RECEIVING THE RFP PACKAGE TO:

Ryan Montal, Confidential Assistant to the Executive Director
Rockland Green
Email: rmontal@rocklandgreen.com

Failure to return this form may result in no further communication or addenda regarding this RFP.

Contractor Name:_____

Address:_____

City:_____ State_____ Zip Code_____

Contact Person:_____

Phone Number: _____ Ext._____ Fax: _____

Email:_____

I have received a copy of the above noted RFP.

_____ We will be submitting a Proposal for RFP 2025-02

_____ We will NOT be submitting a Proposal **– (please indicate reason)**

_____ We are evaluating the RFP and will make a decision after the mandatory Site visit and meeting

I authorize Rockland Green to send further correspondence that Rockland Green deems to be of an urgent nature by the following methods:

Courier Collect: _____ Mail: _____

Email: _____

Signature: _____

Title: _____

NOTICE TO PROPOSERS

DOCUMENT #: RFP-2025-02

Rockland Green, also known as the Rockland County Solid Waste Management Authority ("Rockland Green"), is seeking proposals from contractors to complete all aspects of the design, construction, and equipping of an immersive theater at Rockland Green Headquarters in Nanuet, NY, as well as the renovation of the headquarters. The work must be performed in accordance with the RFP specifications.

This notice serves as an iteration of RFP-2025-02 and may include clarifications, modifications, or updated instructions relevant to the original solicitation. Interested proposers are advised to review the most current version of the RFP to ensure compliance with all requirements.

The RFP-2025-02 document will be available starting Monday, May 5th, 2025. Interested parties may obtain a copy from the Rockland Green office, located at 172 Main Street, Nanuet, NY 10954, between 9:00 a.m. and 4:00 p.m., Monday through Friday (excluding holidays), or download it from Rockland Green's website at rocklandgreen.com under the Businesses - Contract Opportunities section.

For inquiries regarding the RFP distribution, please contact:
Ryan Montal
Confidential Assistant to the Executive Director
Phone: (845) 753-2200 ext. 626
Email: rmontal@rocklandgreen.com

Proposal Submission Requirements:

-Proposers must submit one (1) original proposal, four (4) copies, and a searchable PDF copy on a USB flash drive.

-Proposals must be sealed and clearly labeled on the outside with:
"RFP-2025-02 Enclosed" along with the Proposer's name and the title of the RFP.

-Sealed proposals must be delivered to Rockland Green by Friday, May 23rd, 2025, at 2:00 p.m. (local time) at:

Rockland Green
172 Main Street, Nanuet, NY 10954

Proposals submitted by mail should be addressed to:
Ryan Montal, Confidential Assistant to the Executive Director
Rockland Green
172 Main Street, Nanuet, NY 10954

Proposers are advised to comply with all applicable federal, state, and local laws, including the submission of the required Affidavit of Non-Collusion included in the proposal forms.

Rockland Green strongly encourages the participation of Minority and Women-Owned Business Enterprises (M/WBEs) to the fullest extent possible.

By order of
Rockland Green
172 Main Street
Nanuet, New York 10954
By: Gerard M. Damiani, Jr., Executive Director

Table of Contents

I. INTRODUCTION 1
a. Background 1
b. Administrative Headquarters and Construction of an Immersive Theatre Experience Overview 1
c. Business Structure 2
i. Contract 2
ii. Pricing Structure Overview 2
iii. Security Instruments for the Contract 3
iv. Warranties – Manufacturers' and Workmanship 4
v. Liquidated Damages 4
II. SCOPE OF SERVICES 5
a. The Work 5
b. Proposed Alterations 5
c. Project Schedule 6
d. Project Submittals 6
e. Subcontractors 6
f. Project Labor Agreement 6
g. Hours of Work and Overtime 7
h. Management and Coordination of the Work on the Site 7
i. New York State Prevailing Wage Rates 7
III. PROCUREMENT PROTOCOL 7
a. Proposal Bond 7
b. Procurement Schedule 8
c. Mandatory Site Visit and Meeting 9
d. Site Access and Investigation 9
e. Questions Concerning this RFP 10
f. Addenda or Amendments to this RFP 11
g. Clarification Requests 11
h. Proposer Interviews 11
IV. SPECIFICATIONS AND CONTRACT DRAWINGS 11

V. GOVERNMENTAL APPROVALS 12
VI. TERMS AND CONDITIONS OF PROCUREMENT 12
a. Rockland Green Reservation of Rights 12
b. Confidential/Trade Secret Information 14
c. Expense of Proposal Preparation 15
d. Modifications to Proposals 15
e. Termination of Negotiations 15
f. Withdrawal from Procurement Process 15
g. No Rockland Green Liability 16
h. Continuing Obligation of Proposers 16
i. Minority and Women's Business Enterprises 16
j. No Discrimination and Affirmative Action Plan 16
VII. PROPOSAL FORMS 17
VIII. PROPOSAL CONTENT 17
a. Section I: Cover Letter and Executive Summary 17
b. Section II: Proposal 18
i. Project Approach 18
ii. Qualifications and Experience 19
c. Section III: Proposal Forms 21
IX. SUBMISSION REQUIREMENTS 21
X. PROPOSAL EVALUATION 22
a. General 22
b. Evaluation Team 22
c. Minimum Qualification Criteria 22
d. Comparative Evaluation Criteria 23
e. Award of Contract 25

APPENDICES:

Appendix A	Defined Terms
Appendix B	Specifications
Appendix C	Contract Drawings
Appendix C-1	Site Description
Appendix D	Proposal Forms

1. Signature Page
2. Addenda Acknowledgment Form
3. Qualifications Form
4. Affidavit of Non-Collusion
5. Disclosure Affidavit
6. Affirmative Action Plan
7. Exceptions to this RFP and/or the Contract
8. Consent of Surety
9. FOIL Acknowledgement Form
10. Prevailing Wage Law Violations
11. Certification of Site Conditions
12. Insurance Company Letter of Intent
13. Past and Present Performance Information Form
14. Acknowledgment regarding Drawings and Specifications
15. Proposed Alterations
16. Price Proposal Form

Appendix E	Required Insurance
Appendix F	Prevailing Wage Rates
Appendix G	Project Labor Agreement (Draft)
Appendix H	Contract (Draft)
Appendix I	Forms of Bonds

- Form of Proposal Bond
- Form of Performance Bond
- Form of Labor and Materials Payment Bond

Appendix J	Site Visit Protocol

I. INTRODUCTION[1]

a. Background

Rockland Green is proposing to renovate their existing office building, located at 172 Main Street, Nanuet, NY, and intends to renovate the existing Administrative Headquarters and to construct an Immersive Theatre Experience. A description of the Site upon which the existing office building is situated is attached hereto as Appendix C-1. The new Administrative Headquarters is expected to be operational 270 days from the Notice to Proceed.

b. Administrative Headquarters and Construction of an Immersive Theatre Experience Overview

In this RFP, Rockland Green is soliciting proposals to complete all of the Work required to renovate the existing Administrative Headquarters and to construct an Immersive Theatre Experience (the "Work" or "Project").

Rockland Green will enter into a single Contract with the selected Proposer for the entirety of the Work, which is detailed in the Drawing and Specifications that are included as Appendices B and C respectively hereto. The Work includes, but is not limited to, A new immersive theater and exhibit space, a conference room, an ADA-accessible restroom, upgraded finishes, enhanced lighting, an improved HVAC system, a solar array, an emergency generator, updated exterior finishes, and various site improvements, all as indicated in the Drawings and Specifications.

Intrinsic in the selected Proposer's role is the coordination of the Work on the Site, including Work performed by Subcontractors. Likewise, the selected Proposer will be responsible for managing the Project Schedule so that Final Completion is achieved by the date required by Rockland Green.

This RFP is issued in accordance with Rockland Green's procurement policy. Rockland Green is not subject to Section 101 of the General Municipal Law, and therefore separate contracts for each aspect of the Work are not required, and Rockland Green will enter into a single Contract for all of the Work. Rockland Green will require the Project Labor Agreement (attached hereto as Appendix G) between the selected Proposer, Rockland Green, the labor unions representing Subcontractors, and non-unionized Subcontractors who will perform any portion of the Work. All Work must be performed in accordance with the Contract between the selected Proposer and Rockland Green, including the final Drawings and Specifications set forth therein, all as further defined and discussed in this RFP.

[1] For the purposes of this Request for Proposals ("RFP"), and for eventual use in the Contract, a list of defined terms has been developed. Unless otherwise specified in this RFP, all capitalized terms used in this RFP refer to the words and phrases listed in Appendix A ("Defined Terms") hereto. The Defined Terms may be revised and expanded before incorporation into the Contract.

An award will be made to the responsible Proposer whose Proposal is determined in writing to be the most advantageous to Rockland Green, taking into consideration price and non-price evaluation factors set forth in this RFP. Rockland Green has the right to select the Proposer whose Proposal best satisfies the interests of Rockland Green, and not necessarily on the basis of price or any other single factor.

The Drawings and Specifications attached as Appendices B and C hereto, respectively, include Rockland Green's current design and Specifications for the Administrative Headquarters and Construction of an Immersive Theatre Experience, which were completed by the Architect and Engineer.

Additionally, as discussed in more detail in Article II below, Proposers are invited to include with their Proposals an optional discussion of potential proposed alterations and/or improvements to the Drawings and/or Specifications for Rockland Green's consideration ("Proposed Alterations"). Any such Proposed Alterations may be in addition to those product substitution requests that are referenced in the Specifications. Substitution requests will only be considered due to non-availability of a specified product through no fault of the Contractor.

Rockland Green's Administrative Headquarters and Immersive Theater Experience and Exhibit Spaces is an essential service for residents in Rockland County, and as such, the Work being sought hereunder constitutes an essential service as well.

Proposers should carefully review this document, including the Appendices, which constitutes the formal RFP for the Project, to ensure a clear understanding of Rockland Green's needs, objectives, and scope of services requested herein. Proposals must be prepared according to the requirements set forth in this RFP, including the format and content guidelines. The Proposals will be reviewed and evaluated using the process further described herein.

c. Business Structure
    i. Contract

The definitive statement of the mutual responsibility and liability of Rockland Green and the selected Proposer for the Project will be a single Contract, that includes all Work procured hereunder, and which will be issued via addendum to this RFP as Appendix H hereto. Proposers are required to include in their Proposals their comments to the Contract, if any, in the form of a mark-up thereto. (See Proposal Form 7.)

The final Contract will include appendices that will be modified to include the details of the selected Proposer's Proposal. If there are any Proposed Alterations from the selected Proposer's Proposal that Rockland Green decides to implement, such alterations or improvements will be included in the scope of Work that is subject to the Contract.

ii. Pricing Structure Overview

The selected Contractor will be paid a fixed amount for the Contract Price for all of the Work based on a Schedule of Values, (which will include any Proposed Alterations that are selected by Rockland Green), all in accordance with the Contract. As noted, Rockland Green will consider Proposed Alterations that are submitted with a Proposal. In turn, due to the Proposers having the opportunity to submit Proposed Alterations, Rockland Green expects no Contractor requested change orders after the Contract is awarded, and therefore the fixed Contract Price is not expected to change over the term of the Contract.

For use in Rockland Green's evaluation of Proposals in response to this RFP, Proposers must disclose the number of change orders and the primary causes or reasons therefor for the five reference projects that are required in Proposal Form 13, for both itself and for its proposed Subcontractors. Rockland Green will consider the number of change orders and the primary causes or reasons therefor as part of its evaluation of Proposals in response to this RFP.

During performance of the Work, the Contractor will be required to submit Applications for Payment with supporting documentation to Rockland Green representing that the quantity of Work has reached the level for which payment is requested, that the Work has been properly performed in strict compliance with the Contract Documents, and that the Contractor knows of no reason why payment should not be made as requested.

Rockland Green will retain ten percent (10%) of each payment until Final Completion, as further detailed in the Contract. The Contract Price shall be the Contractor's entire compensation and reimbursement for the Work. Any cost overruns will be the responsibility of the Contractor. All as further detailed in the Contract.

iii. Security Instruments for the Contract

As of the effective date of the Contract and throughout the term of the Contract, the Contractor shall furnish to Rockland Green and maintain, with Rockland Green as beneficiary: (i) a Performance Bond, and (ii) a Labor and Materials Payment Bond, effective for the full duration of the Contract, each in an amount equal to 100% of the Contract Price. The Performance Bond and Labor and Materials Payment Bond shall each be in the applicable form set forth in Appendix I, and shall each be issued by a surety company or companies rated 'A' or better per current A.M. Best Company ratings and listed in the United States Treasury Department's Circular 570. Such surety shall be properly registered and licensed to conduct business in the State. Agents of bonding companies which write the bonds shall furnish the necessary power of attorney, bearing the seal of the company, and evidencing such agent's authority to execute the particular type of bond to be furnished, as well as the right of the surety company to do business in the State.

The Contractor will also be required to provide the Required Insurance, and meet the requirements relative thereto as are set forth in Appendix E. Required Insurance must be issued by an insurance carrier authorized to do business in the State, that carry a Best's "A" or equivalent rating, and that is satisfactory to Rockland Green, to protect the parties from and against any and all claims, demands, actions, judgments, costs, expenses and liabilities of every kind and nature

which may arise or result, directly or indirectly, from or by reason of the Contractor's performance (or the performance of its Subcontractors) of its responsibilities under the Contract. Such insurance shall be maintained at the Contractor's and the Subcontractor's sole cost and expense. Rockland Green shall be listed as a Certificate Holder and additional insured on all such policies as further described in Appendix E of this RFP.

Proposers must provide with their Proposals, evidence of their ability and intention to provide the Security Instruments, including:

(1) a Performance Bond in an amount equal to One Hundred Percent (100%) of the total Contract Price (by way of submission of Proposal Form 8, Consent of Surety)
(2) a Labor and Materials Payment Bond in an amount equal to One Hundred Percent (100%) of the total Contract Price (by way of submission of Proposal Form 8, Consent of Surety); and
(3) the Required Insurance (by way of submission of Proposal Form 12, Insurance Company Letter of Intent).

The Contractor's failure to provide and maintain such Security Instruments shall constitute an immediate event of default under the Contract. The cost of providing any and all Security Instruments shall be borne by the Contractor.

iv. Warranties – Manufacturers' and Workmanship

The Contractor will be required to provide all manufacturers' warranties and a one-year warranty on workmanship commencing from the date of Final Completion and subject to the terms and conditions of the Contract. As set forth in the Contract, the one-year warranty on workmanship includes a full-scale inspection by the Contractor at the end of the Warranty Period, as well as any required Work identified in the inspection.

The Contractor must also obtain from all Subcontractors, vendors, suppliers and other persons from which the Contractor procures structures, improvements, fixtures, machinery, equipment and materials to be incorporated in the Work such warranties and guarantees as are normally provided with respect thereto and as are specifically required in the Contract, each of which shall be assigned to Rockland Green to the full extent of the terms thereof.

The Contractor acknowledges that the Contract Price contains the entire compensation due the Contractor for any and all Warranty work to be performed by the Contractor or its Subcontractors or agents.

v. Liquidated Damages

Time is of the essence for Rockland Green to have the Rockland Green Administrative Headquarters operational. Therefore, except as otherwise excused due to Uncontrollable Circumstances or Rockland Green Fault, the Contractor shall pay daily Liquidated Damages in the amount of two thousand dollars per day ($2,000/day) to Rockland Green commencing on the 45th

day after the Scheduled Substantial Completion Date, if Substantial Completion has not been achieved by then. In addition, if the Contractor does not achieve Final Completion by the 45th day following the scheduled date for Final Completion, the Contractor shall also be responsible for the payment of Liquidated Damages to Rockland Green in the amount of one thousand dollars per day ($1,000/day), all in accordance with the Contract.

II. SCOPE OF SERVICES

a. The Work

The scope of the Work that will fall under a single contract between the selected Proposer and Rockland Green pursuant to this RFP encompasses all of the Work for the Project, which includes, but is not limited to, A new immersive theater and exhibit space, a conference room, an ADA-accessible restroom, upgraded finishes, enhanced lighting, an improved HVAC system, a solar array, an emergency generator, updated exterior finishes, and various site improvements, all as indicated in the Drawings and Specifications attached hereto as Appendices B and C. Because Rockland Green is not subject to Section 101 of the General Municipal Law, Rockland Green will enter into one contract with the selected Proposer for all of the Work. Rockland Green reserves the right to modify the scope of Work at any time before execution of a Contract to add, delete, or otherwise amend any item(s), as it deems necessary, in its sole judgment, and in the best interest of Rockland Green.

b. Proposed Alterations

Proposers are invited to include with their Proposals an additional discussion of potential proposed alterations and/or value engineering to the Drawings and/or Specifications for Rockland Green's consideration. By offering Proposers the opportunity to propose alterations, Rockland Green in turn anticipates no Contractor requested change orders after the Contract is awarded.

Any such Proposed Alterations must be accompanied by the information set forth in Section VIII(b)(i)(c), on page 19 below. All Proposers must also complete Proposal Form 15 and indicate whether their Proposal includes Proposed Alterations. Proposers must also include the cost or savings associated with such Proposed Alterations in the appropriate section of Price Proposal Form 16.

Rockland Green will consider any such Proposed Alterations during its evaluation of the Proposals received in response to this RFP; however, a Proposer's decision not to submit Proposed Alterations will not negatively impact Rockland Green's evaluation of that Proposal. Rockland Green is not obligated to accept or reject any such Proposed Alterations, but rather Rockland Green may discuss and negotiate them with the Proposer(s) who submit them, and may elect to implement any one or more or none of them, and if applicable, will include them in the scope of Work under the Contract. Rockland Green expects no Contractor requested change orders after Contract execution.

c. Project Schedule

Time is of the essence for Rockland Green to have the Administrative Headquarters operational. The selected Contractor will be responsible for developing, managing and maintaining the Project Schedule. The Contractor must achieve Substantial Completion no later than the 270 days from the Notice to Proceed. As set forth herein, Proposers must submit a proposed Project Schedule as part of their Proposals, indicating how many days from the Notice to Proceed will be required to achieve Substantial Completion. Rockland Green encourages aggressive, but realistic schedules to ensure that the Administrative Headquarters and Theatre Experience is operational as soon as is reasonably possible. Such proposed Project Schedule will be included as part of Rockland Green's evaluation. Also, as further set forth above and in the Contract, the Contractor will be responsible for Liquidated Damages if it fails to meet the dates agreed upon for Substantial Completion and Final Completion.

d. Project Submittals

The Contractor will be required to comply with the schedule and process for submission, review, and approval of all Submittals in accordance with the Contract Documents. The Contractor must not perform any Work for which the Contract Documents require a Submittal unless the respective Submittal has been approved by Rockland Green. The Work will be in accordance with approved Submittals, however, the Contractor will not be relieved of responsibility for errors or omissions set forth in Submittals regardless of Rockland Green's approval thereof.

e. Subcontractors

Proposers are required to include with their Proposals a list of Subcontractors proposed for the performance of any part of the Work. In addition, the Proposers must provide a description of responsibilities, relevant experience, qualifications, and certificates and licenses of proposed Subcontractors relevant to the Work each Subcontractor would be hired to perform. Proposers must complete Proposal Form 3, Qualifications Form, for all proposed Subcontractors.

Rockland Green shall have the right to approve any and all Subcontractors. The approval or withholding thereof by Rockland Green of any proposed Subcontractor shall not create any liability of Rockland Green to the Contractor, to third parties or otherwise. The use of any Subcontractor that is debarred, suspended or disqualified from Rockland Green, the County, or State contracting is strictly prohibited. Rockland Green will not award the Contract to a Proposer who proposes to use a Subcontractor who is debarred, suspended or disqualified from Rockland Green, the County, or State contracting.

f. Project Labor Agreement

The selected Proposer and its Subcontractors must be signatories to the Project Labor Agreement before commencing any Work on the Project. The Project Labor Agreement is attached hereto as Appendix G. Pursuant to the Project Labor Agreement, the selected Proposer and all

Subcontractors must employ union labor, however a maximum of 12% of employees by craft may be from a source other than a Local Union. Subcontractors may be used to perform any part of the Work, subject to Rockland Green's right of approval and subject to their being a signatory to the Project Labor Agreement.

g. Hours of Work and Overtime

Hours of work are set forth in the Project Labor Agreement. Overtime work may be necessary to conform to the requirements of the Contract, and is addressed in the Project Labor Agreement. Except as detailed in the Project Labor Agreement, the Work shall progress on the Project every work day during the week and continuously week by week, until the Project is complete.

h. Management and Coordination of the Work on the Site

The Contractor shall be responsible for the Site, and for managing and coordinating all of the Work with and between itself and all Subcontractors. The Contractor must also cooperate in coordinating all Work with the work of Rockland Green, its operators, and other contractors and consultants, and any other forces permitted by Rockland Green to perform work at the Site, or enter the Site, without an increase in the Contract Time or the Contract Price.

i. New York State Prevailing Wage Rates

Proposers are advised that the State of New York requires minimum wage standards for municipal projects for the full duration of construction as prepared by the New York Department of Labor and set forth in the Prevailing Wage Law. A copy of the New York State Prevailing Wage Rates listing for Rockland County is presented in Appendix F, and is included in the Project Labor Agreement.

III. PROCUREMENT PROTOCOL

By submitting a Proposal in response to this RFP, the Proposer is acknowledging that the requirements, scope of Work, and the evaluation process, outlined in this RFP are fair, equitable, not unduly restrictive, understood and agreed to. The submission of a Proposal in response to this RFP shall be considered a representation that the Proposer has carefully inspected all conditions which affect or may, at some future date, affect the performance covered by the Proposal, and that the Proposer is fully informed concerning Rockland Green's operations and the conditions to be encountered, and the character, quality, and quantity of Work to be performed, including Rockland Green's position that no Contractor requested change orders will be executed after Contract execution. In addition, a submission shall indicate that the Proposer is familiar with all federal, State, and local laws which in any way affect the performance of the Work. Any exceptions to the content of the RFP must be presented to Rockland Green prior to the Proposal Submission Date by submission of Proposal Form 7. Proposals must be received by the Proposal Submission Date. Proposals received after the Proposal Submission Date will be late and ineligible for consideration.

a. Proposal Bond

Each Proposal must be accompanied by a Proposal Bond or certified check payable to the order of Rockland Green, in the amount of 5% of the proposed Contract Price. The Proposal Bond must be in the form attached hereto as Appendix I and provide that prior to the expiration or termination of the Proposal Bond, the Proposer shall (1) if so requested by Rockland Green, negotiate an agreement with Rockland Green, and (2) enter into the Contract if the Proposer's Proposal is so selected by Rockland Green; and (3) furnish a properly executed Performance Bond. If the Contractor fails to comply with the above, the surety will pay to Rockland Green, as liquidated damages, the full amount of the Proposal Bond or, as applicable, the certified check shall become the property of Rockland Green and be deposited in Rockland Green's accounts.

Any Proposal Bond must be valid for at least 180 days from the Proposal submission date. If the Contract has not been executed prior to the expiration of the Proposal Bond, Rockland Green may require the renewal of the Proposal Bond for an additional 180 days. No Proposal will be considered, unless it is accompanied by the required certified check or Proposal Bond. The form of the Proposal Bond which must be submitted is set forth in Appendix I.

The certified check or Proposal Bond submitted by Proposers will be returned within ten (10) business days after the earliest to occur of (1) the rejection of the Proposal of such Proposer by Rockland Green, and (2) the execution of the Contract by and between Rockland Green and the selected Proposer.

b. Procurement Schedule

The schedule for this procurement is as follows:

Activity	**Date**
Issue RFP	May 5, 2025
Mandatory Site Visit & Meeting	May 8, 2025 @ 11 AM
Deadline for receipt of questions concerning RFP	May 15, 2025
Proposal submission date	May 23, 2025 @ 2 PM
Proposal evaluation period	May 26 - June 16, 2025
Contract Award	June 16, 2025

c. Mandatory Site Visit and Meeting

Attendance at the Site visit and meeting is mandatory for any entity wishing to submit a Proposal. A failure to attend may preclude a company from proposing on the Work. Any and all are welcome to attend the mandatory Site visit and meeting at the existing office building located at 172 Main Street in Nanuet, New York. In the event a qualified representative of the Proposer is unable to attend the mandatory Site visit and meeting, it may submit to Rockland Green for its consideration documentation supporting the reason for missing the Site visit and meeting. Rockland Green may waive the Site visit and meeting requirement in its sole discretion.

For planning purposes, each potential Proposer must notify Ryan Montal, Confidential Assistant to the Executive Director at rmontal@rocklandgreen.com in writing three (3) days prior to the mandatory Site visit and meeting to indicate the total number of individuals representing such potential Proposer that will be in attendance at the Site visit and meeting. Any individuals representing the Proposer at the Site visit and meeting must be employees or principals of the Proposer. A Proposer may not use a surrogate as its representative at the mandatory Site visit and meeting.

Proposers must familiarize themselves with all field conditions at the Site, including the the Administrative Headquarters and Theatre Experience pursuant to the Work procured herein. Failure of the Proposers to familiarize themselves with all conditions existing at the Site will not relieve them of their obligation to furnish all materials, labor and overtime necessary to carry out the provisions of the Contract Documents and to complete the contemplated Work if they are selected.

All Proposers that visit the Site shall comply with the Site Visit Protocol set forth in Appendix J.

d. Site Access and Investigation

Rockland Green recognizes that Proposers may need access to the Site during the Proposal preparation period, in addition to the mandatory Site visit. Proposers may schedule an individual visit to the Site, in addition to the mandatory Site visit, by contacting Rockland Green. All Proposers that visit the Site at any time shall comply with the Site Visit Protocol set forth in Appendix J. No such individual Site visit shall be scheduled prior to the date of the mandatory Site visit and meeting.

Proposers are solely responsible for conducting their own independent research and due diligence for their preparation of the Proposals and subsequent delivery of services under the Contract. Proposers should satisfy themselves by personal investigation and any other means they deem necessary, as to the conditions affecting the proposed services and the cost thereof. No information derived from any part of this RFP, or from Rockland Green or its agents, employees, advisors or consultants, shall relieve the Contractor from any risk or from fulfilling all terms and

conditions of the Contract. Rockland Green is not responsible for the completeness or accuracy of any information presented in this RFP or otherwise distributed as made available during this procurement process. Proposers are, therefore, strongly encouraged to make all inspections and review all available and relevant information, prior to the submittal of the Proposal, which are necessary in their judgment in order to undertake this responsibility.

e. Questions Concerning this RFP

Following issuance of this RFP, the Proposers may submit written questions to Rockland Green to assist the Proposers in the preparation of their Proposals. Rockland Green may, but shall not be obligated to, respond to such questions. All responses to any questions and requests for additional information which Rockland Green determines to be deserving of response will be issued to all potential Proposers of record in the form of addenda to this RFP which will be issued via email. The last day for submission of written questions will be on the date set forth in the procurement schedule above. Any questions submitted after the deadline for questions may be answered by Rockland Green at its discretion.

No oral interpretation, instruction, or information concerning this RFP given by any agent, employee, advisor, or consultant of Rockland Green shall be binding on Rockland Green. Proposers relying on such oral information risk having their response to this RFP deemed unresponsive by Rockland Green. Rockland Green will not be responsible for any explanation or interpretation of this RFP, unless such explanation or interpretation of this RFP is given in accordance with this written procedure.

Should a Proposer find discrepancies in, or omissions from, this RFP, the Proposer shall immediately notify Rockland Green, in writing, and a written addendum, if necessary, will be delivered to each Proposer.

All inquiries, correspondence, questions or clarifications shall be directed to:

Ryan Montal, Confidential Assistant to Executive Director
Rockland Green
172 Main Street
Nanuet, NY 10954
Email: rmontal@rocklandgreen.com

With a copy to:

John Cirilli, AIA, LEED
Partner
Michael Shilale Architects, LLP.
Email: jcirilli@shilale.com

Except as set forth in this section with regard to procedures for inquiries, correspondence, questions or clarifications, in order to ensure fairness during the procurement process as of the date

this RFP is released to the public and throughout the procurement process and negotiations of a Contract, Proposers or their employees, representatives or agents shall not contact any Rockland Green Board member, any Rockland Green employee (other than Ryan Montal or a designated Rockland Green employee or such other individual as instructed by Rockland Green), or any of Rockland Green's technical or legal consultants.

If a Proposer or its employee, representative or agent contacts a Rockland Green Board member, any Rockland Green employee (other than Ryan Montal or a designated Rockland Green employee or such other individual as instructed by Rockland Green), or any of Rockland Green's technical or legal consultants in relation to this RFP, such Proposer risks either being disqualified from submitting a Proposal in response to this RFP or having its Proposal rejected by Rockland Green.

f. Addenda or Amendments to this RFP

During the period provided for preparation of Proposals, Rockland Green may issue addenda to this RFP. These addenda will be numbered consecutively and will be distributed by email to all who are registered with Rockland Green as having received a copy of this RFP. These addenda will be issued by, or on behalf of, Rockland Green and will constitute a part of this RFP. Each Proposer is required to acknowledge receipt of all addenda at the time of submission of its Proposal by submitting an executed Addendum Acknowledgment Form included as Proposal Form 2. All responses to this RFP shall be prepared with full consideration of the addenda issued prior to the Proposal Submission Date.

g. Clarification Requests

After receipt of Proposals, Rockland Green may, at its sole discretion, conduct discussions with Proposers to clarify any information submitted in the Proposal or assure that the Proposers fully understood and responded to the requirements of the RFP.

Once Proposals have been reviewed, Rockland Green may request that the Proposer submit additional information or clarify certain aspects of its Proposal. Such requests from Rockland Green will be made via written request for clarifications issued via email. Timely responses to such requests will be required before Rockland Green can continue to evaluate the Proposal.

h. Proposer Interviews

After the Proposal Submission Date, Rockland Green may require Proposers to make oral presentations or to attend interviews with representatives of Rockland Green.

IV. SPECIFICATIONS AND CONTRACT DRAWINGS

Proposers must acknowledge an understanding of and ability to comply with, at a minimum, the Specifications set forth in Appendix B and the Drawings set forth in Appendix C by submitting Proposal Form 14. If a Proposer proposes Proposed Alterations for Rockland

Green's consideration, it must include revised Drawings and Specifications (as applicable). The final Drawings and Specifications will be agreed to by the Parties and included in the Contract.

V. GOVERNMENTAL APPROVALS

Because Rockland Green is a public benefit corporation, the Work is exempt from County and local building permitting requirements. Certain state building codes apply to the Project and they are listed in the Drawings. The Architect will make a determination about the Work's compliance with the applicable building codes prior to Final Completion. If any other Government Approvals are necessary or required, the Contractor will be responsible for timely preparing applications and obtaining and paying the cost therefor. The Contractor will only submit such applications as it deems in good faith to be complete, including all necessary studies and documentation. Rockland Green will cooperate with the Contractor in the submission of all applications for Governmental Approvals which the Contractor is obligated to submit, if any.

VI. TERMS AND CONDITIONS OF PROCUREMENT

a. Rockland Green Reservation of Rights

This RFP constitutes an invitation to companies to submit Proposals to Rockland Green. This section describes Rockland Green's responsibilities, rights, and options as they relate to various business, legal, and financial aspects of the procurement effort. By responding to this RFP, Proposers acknowledge and consent to the following conditions relative to the procurement process and the selection of a Proposer to negotiate an agreement with Rockland Green. Without limitation, Rockland Green reserves, holds, and may exercise, at its sole discretion, the following rights and conditions:

1. This RFP does not obligate Rockland Green to procure or contract for any services whatsoever, nor does it obligate Rockland Green to procure the Work.
2. All costs incurred by Proposers in connection with responding to this RFP, the evaluation and selection process undertaken in connection with this procurement, and any negotiations entered into in connection with developing the Contract will be borne by the Proposers.
3. All Proposals become the property of Rockland Green and will not be returned.
4. Rockland Green may reject and return unopened any responses not received by the deadline for receipt of Proposals or may extend the deadline date for submission of Proposals and modify schedule dates.
5. Rockland Green reserves the right, at any time, to determine that any or all Proposers will not be selected for further consideration and to notify such Proposers of Rockland Green's determination.
6. Rockland Green has the right to reject, for any reason, any and all Proposals and components thereof and to eliminate any and all Proposers responding to the RFP from further consideration for this procurement.

7. Rockland Green may conduct clarification discussions, at any time, with one (1) or more Proposers and request additional information relating thereto.
8. Rockland Green may receive questions from Proposers and provide such answers, as it deems appropriate.
9. Rockland Green reserves the right to designate, at any time, one (1) or more Proposers with whom it may select to have a full evaluation of their Proposal(s).
10. Rockland Green has the right to select the Proposal that is the most advantageous to Rockland Green, taking into consideration price and non-price evaluation factors set forth in this RFP, and not necessarily on the basis of price or any other single factor. Rockland Green is not required to accept the lowest cost Proposal.
11. Rockland Green reserves the right to cancel this RFP without issuing another RFP or to amend, supplement, or otherwise modify this RFP, including the scope of services, or otherwise request additional information without prior notice.
12. Rockland Green reserves the right to request Proposers to send a representative to attend Rockland Green interviews.
13. Rockland Green reserves the right to require additional information from one or more Proposers to supplement or clarify the Proposals submitted.
14. Rockland Green reserves the right to conduct investigations of the Proposers, and their responses to this RFP and to request additional evidence to support the information included in any such response.
15. Rockland Green reserves the right to conduct investigations of the Proposer's proposed Subcontractors, and to request additional evidence to regarding any proposed Subcontractor.
16. Rockland Green reserves the right to visit and examine any of the facilities referenced in the Proposal and others owned, operated, and/or built by the Proposer to observe and inspect such facilities.
17. Rockland Green reserves the right to waive any technicalities or immaterial irregularities in any Proposal received, in accordance with Applicable Law.
18. Rockland Green has the right to eliminate any Proposer who submits an incomplete and inadequate response or is not responsive to the requirements of this RFP.
19. Rockland Green reserves the right to issue additional or subsequent solicitations for Proposals.
20. To the extent deemed appropriate by Rockland Green, Rockland Green may select and enter into discussions and to conduct simultaneous negotiations with one or more of the Proposer(s) submitting Proposals.
21. Rockland Green, in its sole discretion, has the right to discontinue negotiations with any selected Proposer at any time prior to the execution of the Contract.

22. Rockland Green reserves the right to enter into agreements for only portions (or not to enter into agreements for any) of the services solicited in this RFP with one or more of the Proposers based upon Rockland Green's judgment of the best single Proposal or combination of Proposals to address Rockland Green's objectives.
23. All activities related to this RFP and the performance under the Contract shall be subject to Applicable Law.
24. Neither Rockland Green, its staff, its representatives, nor any of its consultants will be liable for any claims or damages resulting from the solicitation, collection, review, or evaluation of responses to this RFP.
25. Rockland Green reserves the right to eliminate any Proposer that has a record of material non-compliance with any Applicable Law,
26. Rockland Green reserves the right to waive any mandatory pre-proposal conference, Site visit or meeting on a case-by-case basis.
27. Rockland Green reserves the right to award one single contract for all services described herein or multiple contracts for such services.
28. Notwithstanding any other provision set forth herein, no contract, agreement, bid or proposal awarded by Rockland Green shall be binding and valid until fully executed by the parties.
29. Rockland Green reserves the right to accept and implement any or none of the Proposed Alterations that are included in a Proposer's Proposal.

b. Confidential/Trade Secret Information

Rockland Green is subject to New York State's Freedom of Information law (NY CLS Pub O §§ 84-90) ("FOIL"). Should your submission to this RFP contain "trade secrets," or other information that the disclosure of which could reasonably be expected to be harmful to business interests, you must ensure that such information is clearly identified and marked as such. Identification must be specific by item or paragraph and the following notice should be inserted in the front of the Proposal:

NOTICE

The data on pages _____ of this proposal identified by an asterisk (*) contain technical or financial information, which are trade secrets and/or whose disclosure would cause substantial injury to the Proposer's competitive position. The Proposer requests that such data be used only for the evaluation of the proposal, but understands that the disclosure will be limited to the extent that Rockland Green considers proper under the law. If an agreement is entered into with this Proposer, Rockland Green shall have the right to use or disclose the data as provided in the Agreement, unless otherwise obligated by law.

Rockland Green does not assume any responsibility for disclosure or use of marked data for any purpose. Marked information will be treated as confidential third party information.

Should marked information be the subject of a request under FOIL, you may be requested either to consent to the request, or make representation explaining why the information should not be disclosed.

By submitting a Proposal, any Proposer not selected relinquishes any claim or right to be compensated for or to object to the use of ideas, approaches, concepts, designs or other elements of its Proposal which may be included in the Contract executed with the selected Proposer.

c. Expense of Proposal Preparation

Each Proposal and preparation of all information required pursuant to this RFP shall be prepared at the sole cost and expense (including engineering and legal costs) of the Proposer. In addition, the Proposer shall be solely responsible for all costs (including engineering and legal costs) incurred in connection with the evaluation and selection process undertaken in connection with this procurement and any negotiations entered into in connection with developing a Contract. There shall be no claims whatsoever against Rockland Green, its staff, or its consultants or agents for reimbursement of the costs or expenses (including engineering and legal costs) incurred during the preparation of the Proposal or other information required by this RFP or the procurement process or in connection with the selection process or contract negotiations. Each Proposer that enters into the procurement process shall prepare the required materials and submittals at its own expense and with the express understanding that they cannot make any claims whatsoever for reimbursement from Rockland Green for the costs and expenses associated with the process.

d. Modifications to Proposals

Before opening the Proposals, a Proposer may correct or modify the Proposal by written notice received by Rockland Green prior to the time and date specified in the procurement schedule above. After opening of the Proposals, Rockland Green may waive minor informalities or allow the Proposer to correct such informalities. If a mistake is clearly evident on the face of the Proposal, Rockland Green shall correct the mistake and so notify the Proposer in writing, and the Proposer may not withdraw the Proposal. A Proposer may withdraw a Proposal if a mistake is clearly evident on the face of the Proposal but the intended correction is not similarly evident.

e. Termination of Negotiations

Rockland Green in its sole discretion may, at any time, exclude a Proposer from further participation in the negotiation process if it determines that such Proposer is failing to progress in the negotiations or if the terms of its Proposal provide less value than those of the other Proposers. Rockland Green will give written notice of its decision to the Proposer which shall be sent in writing signed by an authorized representative of Rockland Green, and delivered to the Proposer by certified mail or overnight courier.

f. Withdrawal from Procurement Process

A Proposer may withdraw a Proposal prior to the date and time set for the opening of Proposals provided that a written request to withdraw the Proposal is hand delivered to the Executive Director of Rockland Green, by or on behalf of an authorized representative of the Proposer, or the request is delivered by certified mail or overnight courier.

g. No Rockland Green Liability

Neither Rockland Green, its staff, its representatives, nor any of its consultants will be liable for any claims or damages resulting from the solicitation, collection, review or evaluation of responses to this RFP. Rockland Green assumes no responsibility for the completeness or the accuracy of any information presented in this RFP, or other information distributed or made available during this procurement process. Without limiting the generality of the foregoing, Rockland Green will not be bound by or be responsible for any explanation or interpretation of the proposed documents other than those prepared in writing. In no event may a Proposer to this RFP rely on any oral statement made by Rockland Green or any of Rockland Green's agents, employees, advisors or consultants.

h. Continuing Obligation of Proposers

Any Proposer(s) selected to negotiate with Rockland Green have a continuing obligation to provide Rockland Green with any information requested in this RFP which requires updating due to circumstances that have changed or occurred since the submission of its Proposal. Such obligation shall remain in place until Rockland Green has awarded the Contract.

i. Minority and Women's Business Enterprises

The Authority encourages the fullest possible utilization of Minority and Women Owned Business Enterprises (M/WBE).

j. No Discrimination and Affirmative Action Plan

The Contractor shall not discriminate or permit discrimination by any of its officers, employees, agents and representatives against any person because of age, race, color, religion, national origin, sex, sexual orientation or physical or mental disability, or any other protected category. The Contractor must take all actions reasonably necessary to ensure that applicants are employed, and that employees are treated during employment, without regard to their age, race, color, religion, national origin, sex, sexual orientation or physical or mental disability or any other protected category. Such action shall include, without limitation, recruitment and recruitment advertising; layoff or termination; upgrading, demotion, transfer, rates of pay or other forms of compensation; and selection for training, including apprenticeship. The Contractor shall impose the non-discrimination provisions of this section by contract on all Subcontractors hired with Rockland Green's consent to perform work related to performance of its obligations under the Contract and shall take all reasonable actions necessary to enforce such provisions. The Contractor will post in conspicuous places, available to employees and applicants for employment, notices

setting forth the provisions of this non-discrimination clause. The Contractor shall comply with Rockland Green's Affirmative Action Program and demonstrate compliance with Rockland Green's Affirmative Action Program by submitting Proposal Form 6.

Proposers must have in place sexual harassment policies that are compliant with the New York Human Rights Law ("NYHRL"), and shall provide annual training to all of their employees in accordance with the NYHRL.

VII. PROPOSAL FORMS

Each Proposer must fill out all of the Proposal Forms completely. Proposers must use "N/A" to specify any items set forth in the Proposal Forms that are not applicable to a Proposer. To provide additional information, the Proposer should use separate sheets of paper following the Proposal Form format.

VIII. PROPOSAL CONTENT

This section describes the information that must be included in each Proposal, and the order in which it must be presented. All Proposals must include the following information, in order set forth below:

Section I: Cover Letter and Executive Summary

Section II: Proposal

A. Project Approach (including optional Proposed Alterations)
B. Qualifications and Experience
C. Proposal Security

Section III: Proposal Forms

a. Section I: Cover Letter and Executive Summary

The cover letter is the Proposer's official letter transmitting the complete Proposal to Rockland Green. The cover letter will designate the individuals who will be the key technical and business negotiators. This letter is to be typed on the Proposer's letterhead and is to be signed by an officer of the Proposer who is empowered to sign such material and to commit the Proposer to the obligations contained in the Proposal. If the Proposer is a joint venture, the Proposer shall provide binding letters from each party in the joint venture stating its role and its willingness to meet the requirements of this RFP and any Contract that will be executed. The partners shall be jointly and severally liable to meet the Proposer's obligations.

The executive summary must be presented as a separate document summarizing in clear and concise language, the information contained in all other parts of the Proposal (except for pricing information) and shall include an introduction and overview section and a conclusion. The

executive summary shall also summarize the information contained in the Proposal Forms, including whether the Proposer included any Proposed Alterations. This shall include, for the Contractor and for each Subcontractor, the form of business organization, ownership description, and the proposed role in the Project.

The executive summary should be drafted so that it may be easily understood by persons not having a technical background. In addition, the executive summary shall be limited to five (5) pages, including tables and graphs. Rockland Green may distribute the executive summary to public officials, representatives of public interest groups, and other major project participants; therefore, the Proposer should not include any data in the executive summary that the Proposer judges to be confidential. The executive summary should not contain any price, cost, or economic data. Rockland Green assumes no liability for disclosure or use of any data presented in the executive summary.

Proposers shall include in the executive summary details on how the Work will be performed and how the goals of Rockland Green as set forth in this RFP will be achieved, as well as a representation of Proposer's ability to provide the security required in this RFP.

b. Section II: Proposal

i. Project Approach

a. Proposals must include a complete narrative of the Proposer's assessment of the Work to be performed, demonstrating the Proposer's understanding of the desired overall Project expectations and requirements, which must include:

1. the Proposer's approach to the Project, including identification of those portions of the Work that will be undertaken directly by the Proposer, and what portions of the Work will be subcontracted and to which Subcontractors;
2. a description of resources necessary to fulfill the requirements;
3. a detailed Project Schedule, indicating how many days from the Notice to Proceed will be required to achieve Substantial Completion;
4. any assumptions; and
5. any key issues, constraints, and/or challenges.

b. Rockland Green is aware of the shortage of certain materials and the delivery schedule issues presented by the current market. As such, if there are materials that will require long lead times, Proposers must provide that information to Rockland Green as part of their Proposal, along with a methodology for how it intends to address the situation.

c. All Proposer's must complete Proposal Form 15 and indicate whether their Proposal includes Proposed Alterations for Rockland Green's consideration. Proposals that include Proposed Alterations must be accompanied by revised Drawings and Specifications, as well as a detailed explanation as to how any such Proposed Alterations would: (i) impact the cost to construct the Project, (ii) impact the cost to operate or maintain the Rockland Green

Administrative Headquarters over time, (iii) improve the function of the Rockland Green Administrative Headquarters; (iv) add value for Rockland Green, the employees who will work at the Rockland Green Administrative Headquarters; and/or (vi) shorten the construction time period (without jeopardizing the quality of the design), among other potential alterations and/or improvements. Proposers must also include the cost or savings associated with such Proposed Alterations in the appropriate section of Proposal Form 16.

ii. Qualifications and Experience

General Qualifications and Experience - To enable Rockland Green to evaluate a Proposer's ability and resources to carry out the Work, the Proposer must complete the Qualifications Form included at Proposal Form 3 for the Proposer and each Subcontractor, and must submit with its Proposal the following information for itself and for each Subcontractor:

1. A description of the Proposer's and Subcontractor's organization, its history, its ownership and its organizational structure, a description of divisions by functional area, and the location of offices in the Northeast region, as well as a description of the history of the relationship the Proposer has with each proposed Subcontractor.

2. Project descriptions for at least three (3) projects, completed within the past five (5) years, which are substantially similar in scope and size, completed by each Subcontractor and by the Proposer. Provide examples of projects of similar use and function or other office interior renovations, if possible. The goal of this section is for the Proposers to provide information relating to their experience, the basis of which said Proposer purports to be qualified to carry out all Work required for this Project. The project description must contain the project name, project owner, project location, project narrative, and project dates.

3. Proposers and Subcontractors shall provide no less than five (5) references for projects performed in the last five (5) years. Both Proposers and Subcontractors must complete Proposal Form 13.

4. Audited financial statements, prepared on an accrual basis in accordance with Generally Accepted Accounting Principles, and all relevant notes, for a) the Proposer, and b) each Subcontractor, in a form which clearly indicates assets, liabilities and net worth over the most recent three (3) year period or as many years as the firm has been in business if less than three (3) years. Proposers and Subcontractors who do not demonstrate financial solvency or who are in bankruptcy proceedings will not be considered. This information also allows Rockland Green to assess the Proposer's ability to secure adequate financing, if any is necessary for the Work.

5. Evidence of the Proposer's and Subcontractors' authorization to do business in the State, or commitment to obtain such authorization prior to commencement of the Work.

6. Relevant, related experience for each key team member, including general trade industry

credentials, licensing, educational programs completed, institutional credentials and certifications, and training for each of the key personnel. Include resumes for all key team members.

Regulatory Experience, Compliance and Litigation - To enable Rockland Green to evaluate a Proposer's regulatory experience and compliance, the Proposal shall describe the Proposer's, each Subcontractor's, and each key team member's, experience and effectiveness in dealing with governmental agencies regulating construction and their experience and record of compliance with permits, licenses, approvals, and other regulatory actions. The Proposal shall identify any major incidents of non-compliance, a description of corrective action taken for such incidents, the present status of compliance, and whether regulatory agency sanctions were imposed. The Proposer and each Subcontractor shall disclose any litigation, pending or complete, that relates to or could impact its provision of the Work.

Record of Contract Performance - To enable Rockland Green to evaluate a Proposer's record of contract performance, the Proposer shall identify any cases where the Proposer or any Subcontractor failed to complete any work which it was contracted to perform or had a contract terminated by a government agency due to the quality of its work. If this has occurred, indicate when, where, and the reasons for such termination. If the Proposer or any other Subcontractor has paid any liquidated damages, fines or penalties in connection with the design or construction of any project, the Proposer shall indicate when, where, and under what circumstances such payment was made. On Proposal Form 13, Proposers must also identify the number of change orders and the primary causes or reasons therefor for the five reference projects provided.

Labor Relations – As noted in this RFP, a Project Labor Agreement will be utilized. As such, the Proposer shall describe its experience with and approach to the Project Labor Agreement, citing specific examples of projects completed under a Project Labor Agreement.

The Proposer shall also describe its and each Subcontractor's compliance history with the New York Department of Labor (as well as other jurisdictions) regarding the payment of prevailing wages. To the extent the Proposer, or any member of the proposer team, has been investigated or cited within the past five (5) years for failure to pay prevailing wages or otherwise comply with Applicable Law pertaining to the payment of wages and benefits, including the Prevailing Wage Law or any similar laws in other jurisdictions, the Proposer must so indicate in its Proposal.

Safety Record – The Proposer and each Subcontractor shall provide OSHA logs and discuss its overall safety program including any violations cited by governmental safety agencies or Occupational Safety and Health Administration (OSHA), recognized safety awards, and the Proposer's lost-time accident record compared with industry standards, all within the past three (3) years.

Proposal Security – Each Proposal must be accompanied by a Proposal Bond in the form attached hereto in Appendix I or certified check payable to the order of Rockland Green, in the amount of 5% of the proposed Contract Price, as required herein. Proposers must also submit with their

Proposals a Consent of Surety (Proposal Form 8) and an Insurance Company Letter of Intent (Proposal Form 12) to indicate their ability to obtain the Performance Bond and Labor and Materials Payment Bond and Required Insurance.

c. Section III: Proposal Forms

Proposers must fully complete, execute, and include all Proposal Forms with their Proposals. The Price Proposal Form must include all costs to fully execute, deliver and complete all aspects of the Work. Such costs shall include, but are not limited to the following: materials, labor, tools, equipment, utilities, transportation, supervision and other items to complete the Work, submittals, coordination, shipping, receiving, unloading, storing, protecting, assembly, erecting, rigging, aligning, wiring, painting, sealing, inspecting, and quality control, in full compliance and adherence to the Contract Documents and Contract Standards. Proposals shall remain firm for a minimum of one hundred and eighty (180) days.

IX. SUBMISSION REQUIREMENTS

a. This section contains instructions regarding the submission of the Proposals. Late Proposals will be considered non-responsive and shall be returned to the Proposer unopened. No Proposal will be accepted unless filed on or before the Proposal Submission Date and at the place designated herein. Proposals received prior to the time of opening will be securely kept unopened.

b. Proposals shall be submitted with the Proposal Forms set forth in this RFP. All blank spaces for Proposal prices shall be properly filled in, in ink, or typed, in both words and figures. In case of any price shown in words and its equivalent shown in figures do not agree, the written words shall be binding on the Proposer. All Proposal Forms included in this RFP must be completed and submitted with the Proposal in order to be considered a responsive Proposal.

c. The Proposal documents shall be typed or printed (1-1/2 spacing) on 8-1/2 inch by 11 inch paper, except for figures or drawings which may be prepared at a larger size in order to be legible.

d. Proposals shall be enclosed in a sealed opaque envelope plainly marked on the outside with the statement "RFP-2025-02 - Proposal Enclosed," with the Proposer's name and title of the RFP.

e. One (1) original with original signatures and five (5) paper copies of the Proposal shall be submitted. One electronic copy on an external drive must also be submitted. No email submissions will be accepted. One copy must be clearly marked "original" and must contain all original executed documents.

f. Proposals shall be delivered to:

Rockland Green Administrative Headquarters
172 Main Street
Nanuet, NY 10954
ATTN: Ryan Montal, Confidential Assistant to the Executive Director

X. PROPOSAL EVALUATION

a. General

All Proposals will be evaluated by the procedures and criteria described in this section for the ultimate purpose of determining to whom Rockland Green will award the Contract. An award will be made to the responsible Proposer whose Proposal is determined in writing to be the most advantageous to Rockland Green, taking into consideration price and non-price evaluation factors set forth in this RFP. Rockland Green has the right to select the Proposer whose Proposal best satisfies the interests of Rockland Green, and not necessarily on the basis of price or any other single factor.

The evaluation team will evaluate each Proposal to determine if the Minimum Qualification Criteria set forth in section (c) below are met. Only those Proposers whose Proposals meet the Minimum Qualification Criteria will be considered responsible Proposers and be further evaluated. If the Proposal meets the Minimum Qualification Criteria, then the evaluation team will evaluate the Proposals using the Comparative Evaluation Criteria set forth in section (d) below in order to make a determination of which Proposal is the most advantageous to Rockland Green.

b. Evaluation Team

The Proposal evaluation and selection process described in this section of the RFP will be conducted by an evaluation team led by Rockland Green. The evaluation team will be composed of personnel from Rockland Green and assisted by its consultants. The evaluation team will review and evaluate Proposals and select one (1) or more Proposers with whom Rockland Green will conduct contract negotiations.

c. Minimum Qualification Criteria

The Minimum Qualification Criteria that each Proposer is required to meet are set forth below. Proposals that do not meet the Minimum Qualification Criteria will not be further evaluated by the evaluation team. Each Proposer or Proposal, as applicable, must satisfy the following Minimum Qualification Criteria:

1. All Proposal Forms must be fully and properly completed and all requested information must be provided.

2. The Proposer and all Subcontractors must commit to be registered or authorized to do business in the State of New York, prior to commencement of any Work should they be selected.
3. The Proposer must have successfully constructed no less than three (3) projects similar in scope and size.
4. The Proposer must have at least five (5) years of successful experience in the completion of projects similar in scope and size.
5. The Proposer and all Subcontractors must be financially solvent and must not be in bankruptcy.
6. The Proposer and all Subcontractors must have a demonstrated track record of compliance with Applicable Law. The Proposer, or members of the Proposer team, may be disqualified if credible evidence indicates a lack of commitment to compliance with law, including environmental laws and permit requirements or business integrity. The types of occurrences that will result in disqualification include, but are not limited to:
   - Filing of misleading or false declarations or failing to disclose material information in connection with any governmental filing, including a response to this RFP;
   - Bribery, corrupt business practices, paying consideration for the purpose of improperly influencing a public procurement process;
   - Conduct that would constitute discrimination under the laws of the State of New York and the United States; and
   - The debarment of the Proposer (including any member of the Proposer team) and their officers, principals, stockholders, Affiliates and subsidiaries by the State of New York, thereby prohibiting them from entering into contracts with Rockland Green, or the debarment of the Proposer (including any member of the Proposer team) and their officers, principals, stockholders, Affiliates and subsidiaries by any state in the United States or its political subdivisions from entry into contracts with such government entity. Further, the Proposer must state that it will not use any contractors or Subcontractors who are so debarred, without the expressed written approval of Rockland Green.

Any person who willfully fails to disclose required information or who knowingly discloses false information will not be considered and can be punished by civil or criminal penalties, or both, and will not be awarded the Contract.

d. Comparative Evaluation Criteria

Proposals meeting the Minimum Evaluation Criteria will then be further evaluated by the evaluation team in order to make a determination of which Proposal is the most advantageous to

Rockland Green. Rockland Green has the right to select the Proposer whose Proposal best satisfies the interests of Rockland Green, and not necessarily on the basis of price or any other single factor. The overall net cost of the Proposal is a major criterion in the selection, but not the only determining factor. The criteria set forth below are not necessarily listed in the order of importance and are not necessarily of equal weight. Proposers must provide all information, documents or data necessary to address each of the Comparative Evaluation Criteria.

Rockland Green will evaluate Proposals by applying the following criteria:

1. *Project Approach* – Rockland Green will consider:

    a. The Proposer's assessment of the Work to be performed and their approach, including the proposed Project Schedule and proposed Subcontractors; and

    b. Proposer's identified key issues, constraints and challenges, as well as methods for overcoming potential delays; and

    c. (if submitted) Proposed Alterations. Rockland Green will consider how any such Proposed Alterations would impact the cost to construct the Project and/or the cost to maintain the Rockland Green Administrative Headquarters over time, as well as how the Proposal would improve the function of the Rockland Green Administrative Headquarters or add value for Rockland Green, the employees who will work at the Rockland Green Administrative Headquarters. Rockland Green will also consider how the Proposed Alterations would impact the Project Schedule. By way of example, Rockland Green will consider Proposed Alterations and/or value engineering that for example: would (i) impact the cost to construct the Project, (ii) impact the cost to operate or maintain the Rockland Green Administrative Headquarters over time, (iii) improve the function of the Rockland Green Administrative Headquarters; (iv) add value for Rockland Green, the employees who will work at the Rockland Green Administrative Headquarters; and/or (vi) shorten the construction time period (without jeopardizing the quality of the design), among other potential alterations and/or improvements. A Proposer's decision not to submit Proposed Alterations will not negatively impact Rockland Green's evaluation of that Proposal.

2. *Qualifications and Relevant Experience* – Rockland Green will consider:

    a. Whether the Proposer, Subcontractors and key team members have the requisite capabilities, licensing/certification, and experience to perform the Work.

    b. The extent of Proposers' and Subcontractors' previous experience on similar projects;

    c. References – Rockland Green will evaluate the strength and character from each of the Proposer's project references provided. Such evaluation will consider the Proposer's history of compliance with project schedules, as well as the quality of

its completed work. It should be noted, Rockland Green has the right to conduct independent reference checks, and as such, may contact other entities for which the Proposer has completed a project but who have not been listed as references.

3. *Regulatory Experience, Compliance and Litigation* - Rockland Green will consider a Proposer's and each Subcontractor's record for regulatory compliance with permits, licenses, approvals, and other regulatory actions in prior projects; and Proposers' and Subcontractors' records of litigation.

4. *Record of Contract Performance* – Rockland Green will consider Proposer's record of contractual compliance on prior projects, based upon, but not limited to, number of change orders and the reasons therefor for reference projects, recorded contract disputes, and record of payment of actual or liquidated damages.

5. *Financial Capacity* – Rockland Green will evaluate the financial strengths of the Proposer and Subcontractors. The financial capacity assessment will consider the adequacy of the Proposer and Subcontractors to assure full and timely performance of the Contractor's obligations under the Contract and the overall financial stability of the Contractor and Subcontractors.

6. *Labor Relations* - Rockland Green will consider the Proposer's and each Subcontractors' compliance history with the New York Department of Labor, and the payment of prevailing wages in particular. Rockland Green will also consider a Proposer's and each Subcontractor's experience with projects completed under a Project Labor Agreement.

7. *Safety Record* – Rockland Green will consider the Proposer's and each Subcontractor's safety record.

8. *Contract* - Rockland Green will consider any exceptions the Proposer may take to the Contract or to provisions related to any of the Security Instruments. The evaluation will also be based on the degree to which the Proposer accepts the risk posture and general business deal set forth in the Contract. This criterion will also be used to assess the degree of risk which the Proposer is judged to be assuming under the terms of the Proposal.

9. *Price* - Rockland Green will evaluate the Proposer's pricing set forth on Proposal Form 16. Rockland Green is not bound to accept the lowest price or any Proposal of those submitted. Rockland Green will consider the Price proposed for the base services, as well as the costs or savings of any Proposed Alterations.

e. Award of Contract

An award will be made to the responsible Proposer whose Proposal is considered the most advantageous to Rockland Green. Rockland Green has the right to select the Proposer whose Proposal best satisfies the interests of Rockland Green, and not necessarily on the basis of price or any other single factor. The successful Proposer will be notified by a written notice, signed by a

duly authorized representative of Rockland Green. No other act of Rockland Green shall constitute the award of the Proposal.

APPENDICES

Appendix A	Defined Terms
Appendix B	Specifications
Appendix C	Contract Drawings
Appendix C-1	Site Description
Appendix D	Proposal Forms

1. Signature Page
2. Addenda Acknowledgment Form
3. Qualifications Form
4. Affidavit of Non-Collusion
5. Disclosure Affidavit
6. Affirmative Action Plan
7. Exceptions to this RFP and/or the Contract
8. Consent of Surety
9. FOIL Acknowledgement Form
10. Prevailing Wage Law Violations
11. Certification of Site Conditions
12. Insurance Company Letter of Intent
13. Past and Present Performance Information Form
14. Acknowledgment regarding Drawings and Specifications
15. Proposed Alterations
16. Price Proposal Form

Appendix E	Required Insurance
Appendix F	Prevailing Wage Rates
Appendix G	Project Labor Agreement (Draft)
Appendix H	Contract (Draft)
Appendix I	Forms of Bonds

- Form of Proposal Bond
- Form of Performance Bond
- Form of Labor and Materials Payment Bond

Appendix J	Site Visit Protocol

APPENDIX A

DEFINED TERMS

APPENDIX A
DEFINED TERMS

Affiliate: Any person, corporation or other entity directly or indirectly controlling or controlled by another person, corporation or other entity or under direct or indirect common control with such person, corporation or other entity.

Applicable Law: Means those local building codes referenced in the Drawings, other reference codes and standards and regulatory requirements specifically noted in the Specifications, as well as any law, rule, codes, standards, regulation, requirement, policy, consent decree, consent order, consent agreement, permit, guideline, action, determination or order of, or Governmental Approval issued by, any Governmental Body having jurisdiction, applicable from time to time to any activities associated with the subject matter of the Contract, or any other transaction or matter contemplated hereby (including, but not limited to, any of the foregoing which concern health, safety, fire, environmental protection, labor relations, mitigation monitoring plans, State building codes, non-discrimination and the payment of prevailing wages).

Application for Payment: Monthly applications from the Contractor to Rockland Green for payment, on the form required by the Specifications, and subject to the Contract.

Architect: Means Michael Shilale Architects, LLp, who will serve as Rockland Green's representative during the Project.

Contract:	Means the contract for the Renovation of Rockland Green Administrative Headquarters and Construction of an Immersive Theatre Experience, together with all appendices and any Contract Modifications thereto.
Contract Documents:	The Contract and all of its exhibits and attachments, and any Contract Modifications thereto.
Contract Drawings or Drawings:	The graphic and pictorial portions of the Contract Documents showing the design, location and dimensions of the Work, generally, including plans, elevations, sections, details, schedules, and diagrams, as set forth in Appendix C.
Contract Price or Contract Sum:	The price to be paid by Rockland Green to the selected Contractor for the performance of the Work.
Contract Standards:	The standards, terms, conditions, methods, techniques and practices imposed or required by: (i) Applicable Law, (ii) the Specifications, (iii) the Contract Drawings, (iv) Good Engineering and Construction Practice, (v) Good Industry Practice, (vi) applicable equipment manufacturers' specifications, (vii) applicable Insurance Requirements, and (viii) any other standard, term, condition or requirement specifically provided in the Contract to be observed by the Contractor.
Contract Time:	The period of time, including authorized adjustments as addressed in the Contract, allotted in the Contract Documents for completion of the Work.
Contractor:	The person, partnership, or corporation who enters into the Contract with Rockland Green.

Contractor Fault: Means the falsity of any material representation made by the Contractor under the Contract or any breach, failure, non-performance or non-compliance by the Contractor with its obligations thereunder caused by any willful or negligent act, error or omission by the Contractor, its officials, agents, employees, representatives or independent contractors or Subcontractors which materially and adversely affects Rockland Green's performance or rights or obligations under the Contract.

County: The County of Rockland, New York.

Final Completion: Means the date upon which the Work is complete in accordance with the Contract Documents, including but not limited to any punch list items, and the submission of all documentation required by the Contract Documents.

Good Engineering and Construction Practice: Those methods, techniques, standards and practices which, at the time they are to be employed and in light of the circumstances known or reasonably believed to exist at such time, are generally recognized and accepted as good engineering and construction practices for the engineering and construction industries as followed in the Northeast region of the United States.

Good Industry Practice: Those methods, techniques, standards and practices which, at the time they are to be employed and in light of the circumstances known or reasonably believed to exist at such time, are general accepted as good in the industry.

Governmental Approval: All orders of approval, permits, licenses, authorizations, consents, certifications, registrations, exemptions, rulings, entitlements and approvals issued by a Governmental Body of whatever kind and however described which are required under Applicable Law to be obtained or maintained by any person with respect to the Work.

Governmental Body: Any federal, state, regional or local legislative, executive, judicial or other governmental board, agency, authority, commission, administration, court or other body, or any official thereof having jurisdiction over the Site, the Contractor, the Work, or the Project.

Insurance Requirement: Any rule, regulation, code, or requirement issued by any fire insurance rating bureau or any body having similar functions or by any insurance company that has issued an insurance policy as required under this RFP, as in effect during the Term of the Contract, compliance with which is a condition to the effectiveness of such policy.

Labor and Materials Payment Bond: Means the bond that guarantees the timely payment by the Contractor for all labor, materials, supplies, implements, machinery and equipment to be furnished with respect to the Work throughout the term of the Contract.

Liquidated Damages: Those damages payable by the Contractor for a failure to achieve Substantial Completion and/or Final Completion as set forth in the Contract.

Owner: The Rockland County Solid Waste Management Authority, a/k/a Rockland Green.

Performance Bond: Means the bond that guarantees the Contractor's timely performance of its obligations under the Contract for the benefit of Rockland Green throughout the term of the Contract.

Prevailing Wage Law: Articles 8 and 9 of the New York Labor Law, as amended.

Project: Means the Work procured under this RFP.

Project Labor Agreement: The agreement between Rockland Green, the Contractor, the labor unions representing Subcontractors, and non-unionized Subcontractors, governing the terms and conditions of employment for all workers on the Project.

Project Schedule: The schedule that the Proposer intends to follow to achieve Substantial Completion and Final Completion by the required date. The Project Schedule will be agreed upon and included as an exhibit to the Contract.

Proposal: A Proposer's submission in response to this RFP.

Proposal Bond: Has the meaning set forth in the RFP.

Proposal Forms: The forms attached to this RFP, which are to be completed and submitted by the Proposer as part of its Proposal.

Proposed Alterations: An optional discussion, provided by Proposers in response to the RFP, of potential proposed alterations and/or improvements to the Drawings and/or Specifications for Rockland Green's consideration and may (i) impact the cost to construct the Project, (ii) impact the cost to operate or maintain the Rockland Green Administrative Headquarters over time, (iii) improve the function of the Rockland Green Administrative Headquarters; (iv) add value for Rockland

Green, the employees who will work at the Rockland Green Administrative Headquarters; and/or (vi) shorten the construction time period (without jeopardizing the quality of the design), among other proposed alterations.

Proposer: The entity(ies) submitting a Proposal for the performance of the Work.

Rating Service: Moody's Investors Service, Inc., Fitch, Inc. or Standard & Poor's Rating Services, a division of the McGraw-Hill Companies, Inc., or any of their respective successors and assigns and, if such corporation shall be dissolved or liquidated or shall no longer perform the functions of a securities rating agency, "Rating Service" shall be deemed to refer to any other nationally recognized securities rating agency designated by Rockland Green.

Request for Proposals or RFP: This request for proposals document(s) issued by Rockland Green to renovate the existing Administrative Headquarters and to construct an Immersive Theatre Experience located at 172 Main Street in Nanuet, NY, as amended and supplemented.

Required Insurance: The insurance to be provided and maintained by the Contractor in accordance with Appendix E of this RFP.

Rockland Green or RG CARES: The Rockland County Solid Waste Management Authority a/k/a Rockland Green a/k/a RG CARES.

Rockland Green Fault: Means any breach (including the falsity of any material representation made by Rockland Green under the Contract), failure, non-performance or non-compliance by Rockland Green with its obligations under the Contract to the extent

not directly attributable to any Uncontrollable Circumstance or Contractor Fault that materially and adversely affects the Contractor's performance or rights or obligations under this Contract.

Schedule of Values: The document apportioning the entire Contract Price among the different elements of the Work for the purposes of periodic and final payment.

Scheduled Substantial Completion Date: Means the date upon which the Contractor is required to achieve Substantial Completion in accordance with the Contract.

Security Instruments: The Proposal Bond, Performance Bond, Labor and Materials Payment Bond and Required Insurance.

Site: The real property owned by Rockland Green, located at 172 Main Street, Nanuet, and all ancillary property up to and including the fence line, upon which the existing building with be renovated into the new Rockland Green Administrative Headquarters pursuant to this RFP is located. The Site is more specifically described in Appendix C-1.

Specifications: Those Specifications for the Work as set forth in Appendix B.

State: The State of New York.

Subcontract: An agreement between the Contractor and a Subcontractor, or between a Subcontractor and a sub-subcontractor, as applicable.

Subcontractor: Every person (other than employees of the Contractor) employed or engaged by the Contractor or any person

directly or indirectly in privity with the Contractor (including every subcontractor of whatever tier) for any portion of the Work, whether for the furnishing of labor, materials, equipment, supplies, services, or otherwise in connection with the Work.

Submittals: Sketches, working drawings, shop drawings, studies and analysis, specifications, and calculations as required to adequately perform the Work.

Substantial Completion: The date upon which the Work meets all of the conditions set forth in the Contract for Substantial Completion.

Uncontrollable Circumstance: Means any act, event or condition that is beyond the reasonable control of the party relying thereon as justification for not performing an obligation or complying with any condition required of such party under the Contract, and that materially interferes with or materially increases the cost or time required for performing its obligations thereunder (other than payment obligations), to the extent that such act, event or condition is not the result of the willful or negligent act, error or omission, failure to exercise reasonable diligence, or breach of the Contract on the part of such party.

(A) Inclusions: Subject to the foregoing, Uncontrollable Circumstances shall include the following:

(1) a Change in Law;

(2) naturally occurring events (except weather conditions normal for the northeast region of the United States) such as landslides, underground movement, earthquakes, fires, tornadoes, floods, epidemics, lightning, and other acts of God;

(3) explosion, sabotage or similar occurrence, acts of a declared public enemy, extortion, war, terrorism, blockade or insurrection, riot or civil disturbance;

(4) the failure of any appropriate federal, State, authority or local public agency or private utility having operational jurisdiction in the area in which the Work is being performed; and

(5) acts of terror of a public enemy.

(B) Exclusions: It is specifically understood that none of the following acts, events or circumstances shall constitute Uncontrollable Circumstances:

(1) any act, event, or circumstance that would not have occurred if the affected party had complied with its obligations under the Contract;

(2) general economic conditions, interest or inflation rates, or currency fluctuation;

(3) with respect to Rockland Green, any changes in the financial condition of Rockland Green and with respect to the Contractor, any changes in the financial condition of the Contractor, or their Affiliates or Subcontractors affecting their ability to perform their respective obligations;

(4) the consequences of error, neglect or omissions by the Contractor or any of its employees, agents, suppliers, Subcontractors or Affiliates in the performance of the Work;

(5) the failure of the Contractor to secure patents or licenses or similar authorizations in connection with any technology or machinery necessary to perform its obligations hereunder;

(6) strikes;

(7) labor disputes involving employees of the Contractor, its Affiliates or Subcontractors;

(8) any increase for any reason in premiums charged by the Contractor's insurers or the insurance markets generally for the Required Insurance; and

(9) any impact of prevailing wages, laws or rates on the Contractor's costs with respect to wages and benefits.

Warranty: Means any original equipment manufacturer's warranty, any express or implied warranty provided by Applicable Law or common application and usage in the construction industry, and the one-year warranty provided by the Contractor on workmanship for the Work, which includes a full-scale inspection at the end of the Warranty Period.

Warranty Period: Means the period commencing on the date of Final Completion and continuing through one-year unless otherwise extended as provided herein.

Work: Means all of the work required to be performed by the Contractor under the Contract, all in accordance with the Contract Documents.

APPENDIX B

SPECIFICATIONS

PROJECT MANUAL

Renovations of Rockland Green Administrative Headquarters and Construction of an Immersive Theatre Experience

172 Main Street
Nanuet, NY, 10954

MSA
MICHAEL SHILALE ARCHITECTS, L.L.P.

140 Park Avenue New City, NY 10956
TEL 845-708-9200 FAX 845-708-9222
E-mail info@shilale.com Web www.shilale.com

MSA File No. 40034G
February 18, 2025

© 2024, MICHAEL SHILALE ARCHITECTS, LLP, ALL RIGHTS RESERVED

SERIES 0 BIDDING REQUIREMENTS AND CONTRACT FORMS

SECTION	TITLE
000010	TITLE PAGE
000030	TABLE OF CONTENTS
000040	LIST OF DRAWINGS

DIVISION 01 - GENERAL REQUIREMENTS

SECTION	TITLE
011000	SUMMARY
012100	ALLOWANCES
012200	UNIT PRICES
012300	ALTERNATES
012500	SUBSTITUTION PROCEDURES
012501	REQUEST FOR SUBSTITUTION FORM
012600	CONTRACT MODIFICATION PROCEDURES
012900	PAYMENT PROCEDURES
013100	PROJECT MANAGEMENT & COORDINATION
013101	REQUEST FOR INFORMATION FORM
013200	CONSTRUCTION PROGRESS DOCUMENTATION
013300	SUBMITTAL PROCEDURES
014000	QUALITY REQUIREMENTS
014001	STATEMENT OF SPECIAL INSPECTIONS AND TESTS
014200	REFERENCES
015000	TEMPORARY FACILITIES AND CONTROLS
016000	PRODUCT REQUIREMENTS
017300	EXCECUTION
017419	CONSTRUCTION WASTE MANAGEMENT AND DISPOSAL
017700	CLOSEOUT PROCEDURES
017823	OPERATION & MAINTENANCE DATA
017839	PROJECT RECORD DOCUMENTS
017900	DEMONSTRATIONS AND TRAINING

DIVISION 02 – EXISTING CONDITIONS

SECTION	TITLE
024119	SELECTIVE DEMOLITION

DIVISION 03 – CONCRETE

SECTION	TITLE

DIVISION 04 – MASONRY

SECTION	TITLE
042000	UNIT MASONRY
042200	CONCRETE UNIT MASONRY

DIVISION 05 – METALS

SECTION	TITLE
054000	COLD-FORMED METAL FRAMING (MSA to Confirm)
055213	PIPE AND TUBE RAILINGS (MSA to Confirm)

DIVISION 06 – WOOD, PLASTICS, AND COMPOSITES

SECTION	TITLE
061053	MISCELLANEOUS ROUGH CARPENTRY
064116	PLASTIC-LAMINATE-CLAD ARCHITECTURAL CABINETS

DIVISION 07 – THERMAL AND MOISTURE PROTECTION

SECTION	TITLE
070150.19	PREPARATION FOR REROOFING
072100	THERMAL INSULATION
074113.16	STANDING-SEAM METAL ROOF PANELS
075323	ETHYLENE-PROPYLENE-DIENE-MONOMER (EPDM) ROOFING
076200	SHEET METAL FLASHING AND TRIM
077100	ROOF SPECIALTIES
077200	ROOF ACCESSORIES
077253	SNOW GUARDS
078413	PENETRATION FIRESTOPPING
078443	JOINT FIRESTOPPING
079200	JOINT SEALANTS

DIVISION 08 – OPENINGS

SECTION	TITLE
081416	FLUSH WOOD DOORS
081613	FIBERGLASS REINFORCED POLYESTER (FRP) DOORS
084113	ALUMINUM-FRAMED ENTRANCES AND STOREFRONTS
087100	DOOR HARDWARE
088000	GLAZING

DIVISION 09 – FINISHES

SECTION	TITLE
092216	NON-STRUCTURAL METAL FRAMING
092900	GYPSUM BOARD
093013	CERAMIC TILING
095113	ACOUSTICAL PANEL CEILINGS
096500	MULTILAYER/RIGID CORE FLOORING
096513	RESILIENT BASE AND ACCESSORIES
096519	RESILIENT TILE FLOORING
096813	TILE CARPETING
096816	SHEET CARPETING
098129	SPRAYED ACOUSTICAL INSULATION
098700	POTASSIUM SILICATE COATING & STAIN
099123	INTERIOR PAINTING

DIVISION 10 – SPECIALTIES

SECTION	TITLE
101423.16	ROOM-IDENTIFICATION PANEL SIGNAGE
102800	TOILET, BATH, AND LAUNDRY ACCESSORIES
104413	FIRE PROTECTION CABINETS
104416	FIRE EXTINGUISHERS

DIVISION 12 – FURNISHINGS

SECTION	TITLE
122413	ROLLER WINDOW SHADES

DIVISION 22 – PLUMBING

SECTION	TITLE
220500	COMMON WORK RESULT FOR PLUMBING
220523	VALVES
220529	PIPE HANGERS AND SUPPORTS
220553	PIPE AND VALVE IDENTIFICATION
220576	DRAINAGE ACCESSORIES
220577	FLOOR AND AREA DRAINS
220700	PIPING INSULATION
220800	CLEANING AND TESTING
221023	FACILITY NATURAL GAS PIPING
221100	DOMESTIC WATER PIPING
221119	WATER SUPPLY ACCESSORIES
221300	SANITARY WASTE AND VENT PIPING
223400	GAS FIRED DOMESTIC WATER HEATER
224200	PLUMBING FIXTURES

DIVISION 23 – HEATING, VENTILATING AND AIR CONDITIONING

SECTION	TITLE
230500	COMMON WORK RESULTS FOR HVAC
230523	VALVES
230529	PIPE HANGERS AND SUPPORTS
230550	VIBRATION ISOLATION
230553	PIPE AND VALVE IDENTIFICATION
230554	DUCT AND EQUIPMENT IDENTIFICATION
230593	CLEANING AND TESTING
230594	BALANCING OF SYSTEMS
230713	DUCT INSULATION
230719	PIPING INSULATION
230800	COMMISSIONING OF HVAC BY OWNER
230900	INSTRUMENTATION AND CONTROL FOR HVAC
230993	SEQUENCE OF OPERATIONS FOR HVAC CONTROLS
232000	HVAC PIPING
232001	STRAINERS
232003	THERMOMETERS AND GAUGES
232006	HYDRONIC SPECIALTIES
233113	METAL DUCTWORK

233300	DUCTWORK ACCESSORIES
233417	CEILING EXHAUST FANS
233713	DIFFUSER, REGISTERS, AND GRILLES
233723	ROOF MOUNTED AIR INLETS OUTLETS
234100	AIR FILTERS
235123	GAS VENTS (TYPE B)
235413	ELECTRIC CABINET HEATERS
237223	PACKAGED ROOFTOP DOAS UNIT WITH ENERGY RECOVERY
237314	VARIABLE FREQUENCY DRIVES
238129	VARIABLE REFRIGERANT FLOW SYSTEM
238237	FINNED TUBE RADIATION

DIVISION 26 – ELECTRICAL

SECTION	TITLE
260100	GENERAL PROVISIONS FOR ELECTRICALWORK
260221	MOTORS AND MOTOR CONTROLLERS
260519	LOW VOLTAGE ELECTRICAL POWER CONDUCTORS AND CABLES
260523	CONTROL-VOLTAGE ELECTRICAL POWER CABLES
260526	GROUNDING AND BONDING FOR ELECTRICAL SYSTEMS
260529	HANGERS AND SUPPORTS FOR ELECTRICAL SYSTEMS
260533	RACEWAYS AND BOXES FOR ELECTRICAL SYSTEMS
260539	UNDERFLOOR RACEWAYS FOR ELECTRICAL SYSTEMS
260543	UNDERGROUND DUCTS AND RACEWAYS FOR ELECTRICAL SYSTEMS
260544	SLEEVES AND SLEEVE SEALS FOR ELECTRICAL RACEWAYS AND CABLING
260548	VIBRATION AND SEISMIC CONTROL FOR ELECTRICAL SYSTEMS
260553	IDENTIFICATION FOR ELECTRICAL SYSTEMS
260923	LIGHTING CONTROL DEVICESs
260936	MODULAR DIMMING CONTROLS
262413	SWITCHBOARDS
262416	PANELBOARDS
262719	MULTI-OUTLET ASSEMBLIES
262726	WIRING DEVICES
262816	ENCLOSED SWITCHES AND CIRCUIT BREAKERS
263213	GAS ENGINE DRIVEN GENERATOR SETS
263600	TRANSFER SWITCHES
264113	LIGHTING PROTECTION FOR STRUCTURES
264313	SURGE PROTECTION FOR LOW VOLTAGE ELECTRCAL POWER CIRCUITS
265119	LED INTERIOR LIGHTING
265213	EMERGENCY AND EXIST LIGHTING

DIVISION 28 – ELECTRONIC SAFETY AND SECURITY

SECTION	TITLE
283102	PROTECTED PREMISES FIRE ALARM EMERGENCY COMMUNICATIONS SYSTEM

LIST OF DRAWINGS

A-000	COVER SHEET	02-18-2025
A-001	LEGENDS, ABBREVIATIONS & NOTES	02-18-2025
B-100	BUILDING CODE ANALYSIS	02-18-2025
B-101	BUILDING CODE ANALYSIS	02-18-2025
B-102	BUILDING CODE ANALYSIS	02-18-2025
B-110	FIRST FLOOR EGRESS PLAN	02-18-2025
B-111	SECOND FLOOR EGRESS PLAN	02-18-2025
S-100	MECH. EQUIPS & SOLAR ARRAYS SUPPORT ON EXIST. ROOF FRAMING PLAN	02-18-2025
S-300	TYPICAL DETAILS & JOIST REINFROCING DETAILS	02-18-2025
D-101	FIRST FLOOR DEMO PLAN	02-18-2025
D-102	SECOND FLOOR DEMO PLAN	02-18-2025
D-103	ROOF DEMO PLAN	02-18-2025
D-200	BUILDING DEMO ELEVATIONS	02-18-2025
A-101	PROPOSED FIRST FLOOR PLAN	02-18-2025
A-102	PROPOSED SECOND FLOOR PLAN	02-18-2025
A-103	ROOF PLAN	02-18-2025
A-200	ELEVATIONS	02-18-2025
A-300	BUILDING SECTIONS	02-18-2025
A-310	EXTERIOR WALL SECTIONS	02-18-2025
A-401	FIRST FLOOR REFLECTED CEILING PLAN	02-14-2025
A-402	SECOND FLOOR REFLECTED CEILING PLAN	02-18-2025
A-500	EXTERIOR DETAILS	02-18-2025
A-530	ROOF DETAILS	02-18-2025
A-531	ROOF DETAILS	02-18-2025
A-600	FINISH SCHEULE & PARTITIONS	02-18-2025
A-601	PARTITION TYPES & DETAILS	02-18-2025
A-610	DOOR & HARDWARE SCHEDULE	02-18-2025

A-620	BATHROOM ELEVATIONS	02-18-2025
A-621	CONFERENCE ROOM ELEVATIONS	02-18-2025
A-630	INTERIOR WALL SECTIONS	02-18-2025
A-635	INTERIOR DETAILS	02-18-2025
FF-701	FIRST FLOOR FURNITURE PLAN	02-18-2025
FF-702	SECOND FLOOR FURNITURE PLAN	02-18-2025
PV-100	PHOTOVOLTAIC SITE PLAN	02-18-2025
M-001	MECHANICAL GENERAL NOTES, SYMBOLS, ABBREVIATIONS	02-18-2025
M-002	MECHANICAL SCHEDULES -1	02-18-2025
M-003	MECHANICAL SCHEDULES -2	02-18-2025
M-004	MECHANICAL SCHEDULES -3	02-18-2025
MD-101	MECHANICAL FIRST FLOOR PLAN – DEMOLITION	02-18-2025
MD-102	MECHANICAL SECOND FLOOR PLAN – DEMOLITION	02-18-2025
MD-103	MECHANICAL ROOF PLAN – DEMOLITION	02-18-2025
M-101	MECHANICAL FIRST FLOOR PIPING INSTALLATION	02-18-2025
M-102	MECHANICAL SECOND FLOOR PIPING INSTALLATION	02-18-2025
M-103	MECHANICAL ROOF PLAN – INSTALLATION	02-18-2025
M-201	MECHANICAL FIRST FLOOR DUCTWORK INSTALLATION	02-18-2025
M-202	MECHANICAL SECOND FLOOR DUCTWORK INSTALLATION	02-18-2025
M-301	VENTILATION RISER DIAGRAM	02-18-2025
M-302	VRF PIPING RISER DIAGRAM	02-18-2025
M-401	CONTROL ABBREV, SYMBOLS, BMS OVERALL & HTG PLNT CONTROL DIAGRAMS	02-18-2025
M-402	DOAS AND VRF CONTROL DIAGRAM	02-18-2025
M-501	MECHANICAL DETAILS -1	02-18-2025
M-502	MECHANICAL DETAILS -2	02-18-2025
M-503	MECHANICAL DETAILS -3	02-18-2025
P-001	PLUMBING GENERAL NOTES	02-18-2025
P-002	PLUMBING SITE PLAN	02-18-2025
PD-101	PLUMBING FIRST FLOOR DEMOLITION	02-18-2025

PD-103	PLUMBING ROOF PLAN – DEMOLITION	02-18-2025
P-101	PLUMBING FIRST FLOOR INSTALLATION PLAN	02-18-2025
P-102	PLUMBING SECOND FLOOR – INSTALLATION	02-18-2025
P-103	PLUMBING ROOF PLAN – INSTALLATION	02-18-2025
P-501	DETAILS	02-18-2025
P-502	DETAILS	02-18-2025
P-503	PLUMBING RISER DIAGRAMS	02-18-2025
E-001	ELECTRICAL GENERAL NOTES & SYMBOLS	02-18-2025
ED-101	ELECTRICAL FIRST FLOOR – DEMOLITION	02-18-2025
ED-102	ELECTRICAL SECOND FLOOR – DEMOLITION	02-18-2025
ED-103	ELECTRICAL ROOF – DEMOLITION	02-18-2025
E-101	ELECTRICAL FIRST FLOOR – INSTALLATION	02-18-2025
E-102	ELECTRICAL SECOND FLOOR – INSTALLATION	02-18-2025
E-103	ELECTRICAL ROOF PLAN – INSTALLATION	02-18-2025
E-104	ELECTRICAL SITE PLAN	02-18-2025
E-111	ELECTRICAL FIRST FLOOR EQUIPMENT – INSTALLATION	02-18-2025
E-112	ELECTRICAL SECOND FLOOR EQUIPMENT – INSTALLATION	02-18-2025
E-113	ELECTRICAL SOLAR PLAN – INSTALLATION	02-18-2025
E-201	ELECTRICAL FIRST FLOOR RCP – INSTALLATION	02-18-2025
E-202	ELECTRICAL SECOND FLOOR RCP – INSTALLATION	02-18-2025
E-203	ELECTRICAL LIGHTING CONTROLS	02-18-2025
E-204	ELECTRICAL AV CONTROLS	02-18-2025
E-301	ELECTRICAL POWER RISER	02-18-2025
E-302	ELECTRICAL SYSTEMS PARTIAL RISERS	02-18-2025
E-401	ELECTRICAL PANEL SCHEDULES SHEET NO. 1	02-18-2025
E-402	ELECTRICAL PANEL SCHEDULES SHEET NO. 2	02-18-2025
E-501	ELECTRICAL DETAILS	02-14-2025
FA-001	FIRE ALARM GENERAL NOTES	02-14-2025
FA-002	FIRE ALARM RISER AND IO MATRIX	02-18-2025

FA-101	FIRE ALARM FIRST FLOOR – INSTALLATION	02-18-2025
FA-102	FIRE ALARM SECOND FLOOR – INSTALLATION	02-18-2025

SECTION 011000 - SUMMARY

PART 1 - GENERAL

1.1 RELATED DOCUMENTS

A. Drawings and general provisions of the Contract, including General and Supplementary Conditions and other Division 01 Specification Sections, apply to this Section.

1.2 SUMMARY

A. Section Includes:

1. Project information.
2. Work covered by Contract Documents.
3. Multiple Work Packages.
4. Work under Owner's separate contracts.
5. Contractor's use of site and premises.
6. Coordination with occupants.
7. Work restrictions.
8. Specification and Drawing conventions.
9. Miscellaneous provisions.

B. Related Requirements:

1. Section 015000 "Temporary Facilities and Controls" for limitations and procedures governing temporary use of Owner's facilities.
2. Section 017300 "Execution" for coordination of Owner-installed products.

1.3 DEFINITIONS

A. Work Package: A group of specifications, drawings, and schedules prepared by the design team to describe a portion of the Project Work for pricing, permitting, and construction.

1.4 PROJECT INFORMATION

A. Project Identification: 44023 .

1. Project Location: 140 Park Avenue, New City, New York, 10956, United States.

B. Owner: Rockland Green, 172 Main Street, Nanuet, NY 10954.

1. Owner's Representative: Gerard M. Damiani, Executive Director.

C. Architect: Michael Shilale Architects, LLP, 140 Park Avenue, New City, New York, 10956.

Copyright © 2025 by the American Institute of Architects. Warning: This AIA MasterSpec-based document is protected by U.S. Copyright Law and International Treaties. It was created by "Michael Shilale Architects, LLP" for "Renovation of Rockland Green Administrative Headquarters and Construction of an Immersive Theatre Experience". A valid, current MasterSpec license is required for editing and use of this document for any other project.(22360)

1. Architect's Representative: Michael Shilale Architects, LLP.

D. Architect's Consultants: Architect has retained the following design professionals, who have prepared designated portions of the Contract Documents:

1. MEP & Structural : GPI Engineering .

E. Contractor: to be selected has been engaged as Contractor for this Project.

1.5 WORK COVERED BY CONTRACT DOCUMENTS

A. The Work of Project is defined by the Contract Documents and includes, but is not limited to, the following:

1. Remove existing boiler and replace with new high efficiency boiler. New elements to be installed such as: housekeeping pad, hot water heater, intake vent, exhaust flue and circulating pumps. Existing oil tank to be decommissioned and removed. and other Work indicated in the Contract Documents.

B. Type of Contract:

1. Project will be constructed under coordinated, concurrent multiple contracts. See Section 011200 "Multiple Contract Summary" for a list of multiple contracts, a description of work included under each of the multiple contracts, and the responsibilities of Project coordinator.

1.6 WORK UNDER OWNER'S SEPARATE CONTRACTS

A. Work with Separate Contractors: Cooperate fully with Owner's separate contractors, so work on those contracts may be carried out smoothly, without interfering with or delaying Work under this Contract or other contracts. Coordinate the Work of this Contract with work performed under Owner's separate contracts.

B. Concurrent Work: Owner will award separate contract(s) for the following construction operations at Project site. Those operations will be conducted simultaneously with Work under this Contract.

1.7 CONTRACTOR'S USE OF SITE AND PREMISES

A. Unrestricted Use of Site: Each Contractor shall have full use of Project site for construction operations during construction period. Contractor's use of Project site is limited only by Owner's right to perform work or to retain other contractors on portions of Project.

B. Limits on Use of Site: Limit use of Project site to Work in areas indicated. Do not disturb portions of Project site beyond areas in which the Work is indicated.

Copyright © 2025 by the American Institute of Architects. Warning: This AIA MasterSpec-based document is protected by U.S. Copyright Law and International Treaties. It was created by "Michael Shilale Architects, LLP" for "Renovation of Rockland Green Administrative Headquarters and Construction of an Immersive Theatre Experience". A valid, current MasterSpec license is required for editing and use of this document for any other project.(22360)

1. Limits on Use of Site: Confine construction operations to work area defined on drawings .
2. Driveways, Walkways and Entrances: Keep driveways parking garage, loading areas, and entrances serving premises clear and available to Owner, Owner's employees, and emergency vehicles at all times. Do not use these areas for parking or for storage of materials.
   a. Schedule deliveries to minimize use of driveways and entrances by construction operations.
   b. Schedule deliveries to minimize space and time requirements for storage of materials and equipment on-site.

C. Condition of Existing Building: Maintain portions of existing building affected by construction operations in a weathertight condition throughout construction period. Repair damage caused by construction operations.

D. Condition of Existing Grounds: Maintain portions of existing grounds, landscaping, and hardscaping affected by construction operations throughout construction period. Repair damage caused by construction operations.

1.8 COORDINATION WITH OCCUPANTS

A. Partial Owner Occupancy: Owner will occupy the premises during entire construction period, with the exception of areas under construction. Cooperate with Owner during construction operations to minimize conflicts and facilitate Owner usage. Perform the Work so as not to interfere with Owner's operations. Maintain existing exits unless otherwise indicated.

1. Maintain access to existing walkways, corridors, and other adjacent occupied or used facilities. Do not close or obstruct walkways, corridors, or other occupied or used facilities without written permission from Owner and authorities having jurisdiction.
2. Provide not less than 72 hours' notice to Owner of activities that will affect Owner's operations.

B. Owner Limited Occupancy of Completed Areas of Construction: Owner reserves the right to occupy and to place and install equipment in completed portions of the Work, prior to Substantial Completion of the Work, provided such occupancy does not interfere with completion of the Work. Such placement of equipment and limited occupancy shall not constitute acceptance of the total Work.

1. Architect will prepare a Certificate of Substantial Completion for each specific portion of the Work to be occupied prior to Owner acceptance of the completed Work.
2. Obtain a Certificate of Occupancy from authorities having jurisdiction before limited Owner occupancy.
3. Before limited Owner occupancy, mechanical and electrical systems shall be fully operational, and required tests and inspections shall be successfully completed. On occupancy, Owner will operate and maintain mechanical and electrical systems serving occupied portions of Work.
4. On occupancy, Owner will assume responsibility for maintenance and custodial service for occupied portions of Work.

Copyright © 2025 by the American Institute of Architects. Warning: This AIA MasterSpec-based document is protected by U.S. Copyright Law and International Treaties. It was created by "Michael Shilale Architects, LLP" for "Renovation of Rockland Green Administrative Headquarters and Construction of an Immersive Theatre Experience". A valid, current MasterSpec license is required for editing and use of this document for any other project.(22360)

1.9 WORK RESTRICTIONS

A. Comply with restrictions on construction operations.

1. Comply with limitations on use of public streets, work on public streets, rights of way, and other requirements of authorities having jurisdiction.

B. On-Site Work Hours: Limit work to between 7 a.m. to 4 p.m., Monday through Friday, unless otherwise indicated. Work hours may be modified to meet Project requirements if approved by Owner and authorities having jurisdiction.

1. Weekend Hours: with approval by the owner .
2. Early Morning Hours: with approval by the owner .
3. Work in Existing Building: not permitted while school is in session .
4. Hours for Utility Shutdowns: to be coordinated with the owner 48 hours in advance .
5. Hours for Core Drilling or loud activities : to be coordinated with owner 48 hours in advance .

C. Existing Utility Interruptions: Do not interrupt utilities serving facilities occupied by Owner or others unless permitted under the following conditions and then only after arranging for temporary utility services according to requirements indicated:

1. Notify Architect Owner not less than two days in advance of proposed utility interruptions.
2. Obtain Architect's written permission before proceeding with utility interruptions.

D. Noise, Vibration, Dust, and Odors: Coordinate operations that may result in high levels of noise and vibration, dust, odors, or other disruption to Owner occupancy with Owner.

1. Notify Architect not less than two days in advance of proposed disruptive operations.
2. Obtain Architect's written permission before proceeding with disruptive operations.

E. Employee Identification: Provide identification tags for Contractor personnel working on Project site. Require personnel to use identification tags at all times.

F. Employee Screening: Comply with Owner's requirements for drug and background screening of Contractor personnel working on Project site.

1. Maintain list of approved screened personnel with Owner's representative.

1.10 SPECIFICATION AND DRAWING CONVENTIONS

A. Specification Content: The Specifications use certain conventions for the style of language and the intended meaning of certain terms, words, and phrases when used in particular situations. These conventions are as follows:

1. Imperative mood and streamlined language are generally used in the Specifications. The words "shall," "shall be," or "shall comply with," depending on the context, are implied where a colon (:) is used within a sentence or phrase.

Copyright © 2025 by the American Institute of Architects. Warning: This AIA MasterSpec-based document is protected by U.S. Copyright Law and International Treaties. It was created by "Michael Shilale Architects, LLP" for "Renovation of Rockland Green Administrative Headquarters and Construction of an Immersive Theatre Experience". A valid, current MasterSpec license is required for editing and use of this document for any other project.(22360)

2. Text Color: Text used in the Specifications, including units of measure, manufacturer and product names, and other text may appear in multiple colors or underlined as part of a hyperlink; no emphasis is implied by text with these characteristics.
3. Hypertext: Text used in the Specifications may contain hyperlinks. Hyperlinks may allow for access to linked information that is not residing in the Specifications. Unless otherwise indicated, linked information is not part of the Contract Documents.
4. Specification requirements are to be performed by Contractor unless specifically stated otherwise.

B. Division 00 Contracting Requirements: General provisions of the Contract, including General and Supplementary Conditions, apply to all Sections of the Specifications.

C. Division 01 General Requirements: Requirements of Sections in Division 01 apply to the Work of all Sections in the Specifications.

D. Drawing Coordination: Requirements for materials and products identified on Drawings are described in detail in the Specifications. One or more of the following are used on Drawings to identify materials and products:

1. Terminology: Materials and products are identified by the typical generic terms used in the individual Specifications Sections.
2. Abbreviations: Materials and products are identified by abbreviations scheduled on Drawings and published as part of the U.S. National CAD Standard.
3. Keynoting: Materials and products are identified by reference keynotes referencing Specification Section numbers found in this Project Manual.

PART 2 - PRODUCTS (Not Used)

PART 3 - EXECUTION (Not Used)

END OF SECTION 011000

Copyright © 2025 by the American Institute of Architects. Warning: This AIA MasterSpec-based document is protected by U.S. Copyright Law and International Treaties. It was created by "Michael Shilale Architects, LLP" for "Renovation of Rockland Green Administrative Headquarters and Construction of an Immersive Theatre Experience". A valid, current MasterSpec license is required for editing and use of this document for any other project.(22360)

SECTION 012100 - ALLOWANCES

PART 1 - GENERAL

1.1 RELATED DOCUMENTS

A. Drawings and general provisions of the Contract, including General and Supplementary Conditions and other Division 01 Specification Sections, apply to this Section.

1.2 SUMMARY

A. Section includes administrative and procedural requirements governing allowances.

B. Types of allowances include the following:

1. Lump-sum allowances.
2. Unit-cost allowances.
3. Quantity allowances.
4. Testing and inspecting allowances.

C. Related Requirements:

1. Section 012200 "Unit Prices" for procedures for using unit prices, including adjustment of quantity allowances when applicable.
2. Section 012600 "Contract Modification Procedures" for procedures for submitting and handling Change Orders.
3. Section 014000 "Quality Requirements" for procedures governing the use of allowances for field testing by an independent testing agency.

1.3 DEFINITIONS

A. Allowance: A quantity of work or dollar amount included in the Contract, established in lieu of additional requirements, used to defer selection of actual materials and equipment to a later date when direction will be provided to Contractor. If necessary, additional requirements will be issued by Change Order.

1.4 SELECTION AND PURCHASE

A. At the earliest practical date after award of the Contract, advise Architect of the date when final selection, or purchase and delivery, of each product or system described by an allowance must be completed by the Owner to avoid delaying the Work.

B. At Architect's request, obtain proposals for each allowance for use in making final selections. Include recommendations that are relevant to performing the Work.

Copyright © 2025 by the American Institute of Architects. Warning: This AIA MasterSpec-based document is protected by U.S. Copyright Law and International Treaties. It was created by "Michael Shilale Architects, LLP" for "Renovation of Rockland Green Administrative Headquarters and Construction of an Immersive Theatre Experience". A valid, current MasterSpec license is required for editing and use of this document for any other project.(22360)

C. Purchase products and systems selected by Architect from the designated supplier.

1.5 ACTION SUBMITTALS

A. Submit proposals for purchase of products or systems included in allowances in the form specified for Change Orders.

1.6 INFORMATIONAL SUBMITTALS

A. Submit invoices or delivery slips to show actual quantities of materials delivered to the site for use in fulfillment of each allowance.

B. Submit time sheets and other documentation to show labor time and cost for installation of allowance items that include installation as part of the allowance.

C. Coordinate and process submittals for allowance items in same manner as for other portions of the Work.

1.7 LUMP-SUM ALLOWANCES

A. Allowance shall include cost to Contractor of specific products and materials ordered by Owner or selected by Architect under allowance and shall include freight , and delivery to Project site.

B. Unless otherwise indicated, Contractor's costs for receiving and handling at Project site, labor, installation, overhead and profit, and similar costs related to products and materials ordered by Owner or selected by Architect under allowance shall be included as part of the Contract Sum and not part of the allowance.

C. Unused Materials: Return unused materials purchased under an allowance to manufacturer or supplier for credit to Owner, after installation has been completed and accepted.

1. If requested by Architect, retain and prepare unused material for storage by Owner. Deliver unused material to Owner's storage space as directed.

1.8 UNIT-COST ALLOWANCES

A. Allowance shall include cost to Contractor of specific products and materials ordered by Owner or selected by Architect under allowance and shall include freight and delivery to Project site.

B. Unless otherwise indicated, Contractor's costs for receiving and handling at Project site, labor, installation, overhead and profit, and similar costs related to products and materials ordered by Owner or selected by Architect under allowance shall be included as part of the Contract Sum and not part of the allowance.

C. Unused Materials: Return unused materials purchased under an allowance to manufacturer or supplier for credit to Owner, after installation has been completed and accepted.

Copyright © 2025 by the American Institute of Architects. Warning: This AIA MasterSpec-based document is protected by U.S. Copyright Law and International Treaties. It was created by "Michael Shilale Architects, LLP" for "Renovation of Rockland Green Administrative Headquarters and Construction of an Immersive Theatre Experience". A valid, current MasterSpec license is required for editing and use of this document for any other project.(22360)

1. If requested by Architect, retain and prepare unused material for storage by Owner. Deliver unused material to Owner's storage space as directed.

1.9 QUANTITY ALLOWANCES

A. Allowance shall include cost to Contractor of specific products and materials ordered by Owner or selected by Architect under allowance and shall include [**taxes,**]freight and delivery to Project site.

B. Unless otherwise indicated, Contractor's costs for receiving and handling at Project site, labor, installation, overhead and profit, and similar costs related to products and materials ordered by Owner or selected by Architect under allowance shall be included as part of the Contract Sum and not part of the allowance.

C. Unused Materials: Return unused materials purchased under an allowance to manufacturer or supplier for credit to Owner, after installation has been completed and accepted.

1. If requested by Architect, retain and prepare unused material for storage by Owner. Deliver unused material to Owner's storage space as directed.

1.10 TESTING AND INSPECTING ALLOWANCES

A. Testing and inspecting allowances include the cost of engaging testing agencies, actual tests and inspections, and reporting results.

B. The allowance does not include incidental labor required to assist the testing agency or costs for retesting if previous tests and inspections result in failure. The cost for incidental labor to assist the testing agency shall be included in the Contract Sum.

C. Costs of testing and inspection services not specifically required by the Contract Documents are Contractor responsibilities and are not included in the allowance.

D. At Project closeout, credit unused amounts remaining in the testing and inspecting allowance to Owner by Change Order.

1.11 ADJUSTMENT OF ALLOWANCES

A. Allowance Adjustment: To adjust allowance amounts, prepare a Change Order proposal based on the difference between purchase amount and the allowance, multiplied by final measurement of work-in-place where applicable. If applicable, include reasonable allowances for cutting losses, tolerances, mixing wastes, normal product imperfections, required maintenance materials, and similar margins.

1. Include installation costs in purchase amount only where indicated as part of the allowance.
2. If requested, prepare explanation and documentation to substantiate distribution of overhead costs and other markups.

Copyright © 2025 by the American Institute of Architects. Warning: This AIA MasterSpec-based document is protected by U.S. Copyright Law and International Treaties. It was created by "Michael Shilale Architects, LLP" for "Renovation of Rockland Green Administrative Headquarters and Construction of an Immersive Theatre Experience". A valid, current MasterSpec license is required for editing and use of this document for any other project.(22360)

3. Submit substantiation of a change in scope of Work, if any, claimed in Change Orders related to unit-cost allowances.
4. Owner reserves the right to establish the quantity of work-in-place by independent quantity survey, measure, or count.

B. Submit claims for increased costs due to a change in the scope or nature of the allowance described in the Contract Documents, whether for the purchase order amount or Contractor's handling, labor, installation, overhead, and profit.

1. Do not include Contractor's or subcontractor's indirect expense in the Change Order cost amount unless it is clearly shown that the nature or extent of Work has changed from what could have been foreseen from information in the Contract Documents.
2. No change to Contractor's indirect expense is permitted for selection of higher- or lower-priced materials or systems of the same scope and nature as originally indicated.

PART 2 - PRODUCTS (Not Used)

PART 3 - EXECUTION

3.1 EXAMINATION

A. Examine products covered by an allowance promptly on delivery for damage or defects. Return damaged or defective products to manufacturer for replacement.

3.2 PREPARATION

A. Coordinate materials and their installation for each allowance with related materials and installations to ensure that each allowance item is completely integrated and interfaced with related work.

3.3 SCHEDULE OF ALLOWANCES

A. Allowance No. 1: Quantity Allowance: Deck Replacement: Include 200 SF of roof deck replacement.

B. Allowance No. 2: Quantity Allowance: Masonry Repointing: Include 20 LF of repointing as specified in section 04120.64 “Brick Masonry Repointing”

C. Allowance No. 3: Quantity Allowance: Masonry Repair: Include 200 SF of repair as specified in section 04120.63 “Brick Masonry Repair”

D. Allowance No.4: Lump-sum Allowance: Contactor shall include the sum of $515,000 to provide and install new kitchenette cabinets and countertop.

END OF SECTION 012100

Copyright © 2025 by the American Institute of Architects. Warning: This AIA MasterSpec-based document is protected by U.S. Copyright Law and International Treaties. It was created by "Michael Shilale Architects, LLP" for "Renovation of Rockland Green Administrative Headquarters and Construction of an Immersive Theatre Experience". A valid, current MasterSpec license is required for editing and use of this document for any other project.(22360)

SECTION 012200 - UNIT PRICES

PART 1 - GENERAL

1.1 RELATED DOCUMENTS

A. Drawings and general provisions of the Contract, including General and Supplementary Conditions and other Division 01 Specification Sections, apply to this Section.

1.2 SUMMARY

A. Section includes administrative and procedural requirements for unit prices.

B. Related Requirements:

1. Section 012100 "Allowances" for procedures for using unit prices to adjust quantity allowances.
2. Section 012600 "Contract Modification Procedures" for procedures for submitting and handling Change Orders.
3. Section 014000 "Quality Requirements" for field testing by an independent testing agency.

1.3 DEFINITIONS

A. Unit price is an amount incorporated into the Agreement, applicable during the duration of the Work as a price per unit of measurement for materials, equipment, or services, or a portion of the Work, added to or deducted from the Contract Sum by appropriate modification, if the scope of Work or estimated quantities of Work required by the Contract Documents are increased or decreased.

1.4 PROCEDURES

A. Unit prices include all necessary material, plus cost for delivery, installation, insurance, overhead, and profit.

B. Measurement and Payment: See individual Specification Sections for work that requires establishment of unit prices. Methods of measurement and payment for unit prices are specified in those Sections.

C. Owner reserves the right to reject Contractor's measurement of work-in-place that involves use of established unit prices and to have this work measured, at Owner's expense, by an independent surveyor acceptable to Contractor.

Copyright © 2025 by the American Institute of Architects. Warning: This AIA MasterSpec-based document is protected by U.S. Copyright Law and International Treaties. It was created by "Michael Shilale Architects, LLP" for "Renovation of Rockland Green Administrative Headquarters and Construction of an Immersive Theatre Experience". A valid, current MasterSpec license is required for editing and use of this document for any other project.(22360)

D. List of Unit Prices: A schedule of unit prices is included in Part 3. Specification Sections referenced in the Part 3 "Schedule of Unit Prices" Article contain requirements for materials described under each unit price.

PART 2 - PRODUCTS (Not Used)

PART 3 - EXECUTION

3.1 SCHEDULE OF UNIT PRICES

A. Unit Price No. 1

1. Provide a price to add or remove 20 SF of existing roof decking.

B. Unit Price No. 2

1. Provide a price to add or remove 20 LF of masonry repointing.

C. Unit Price No. 3

1. Provide a price to add or remove 20 SF of masonry repair.

END OF SECTION 012200

Copyright © 2025 by the American Institute of Architects. Warning: This AIA MasterSpec-based document is protected by U.S. Copyright Law and International Treaties. It was created by "Michael Shilale Architects, LLP" for "Renovation of Rockland Green Administrative Headquarters and Construction of an Immersive Theatre Experience". A valid, current MasterSpec license is required for editing and use of this document for any other project.(22360)

SECTION 012300 - ALTERNATES

PART 1 - GENERAL

1.1 RELATED DOCUMENTS

A. Drawings and general provisions of the Contract, including General and Supplementary Conditions and other Division 01 Specification Sections, apply to this Section.

1.2 SUMMARY

A. Section includes administrative and procedural requirements for alternates.

1.3 DEFINITIONS

A. Alternate: An amount proposed by bidders and stated on the Bid Form for certain work defined in the bidding requirements that may be added to or deducted from the base bid amount if the Owner decides to accept a corresponding change either in the amount of construction to be completed or in the products, materials, equipment, systems, or installation methods described in the Contract Documents.

1. Alternates described in this Section are part of the Work only if enumerated in the Agreement.
2. The cost or credit for each alternate is the net addition to or deduction from the Contract Sum to incorporate alternates into the Work. No other adjustments are made to the Contract Sum.

1.4 PROCEDURES

A. Coordination: Revise or adjust affected adjacent work as necessary to completely integrate work of the alternate into Project.

1. Include, as part of each alternate, miscellaneous devices, accessory objects, and similar items incidental to or required for a complete installation, whether or not indicated as part of alternate.

B. Execute accepted alternates under the same conditions as other Work of the Contract.

C. Schedule: A Part 3 "Schedule of Alternates" Article is included at the end of this Section. Specification Sections referenced in schedule contain requirements for materials necessary to achieve the work described under each alternate.

Copyright © 2025 by the American Institute of Architects. Warning: This AIA MasterSpec-based document is protected by U.S. Copyright Law and International Treaties. It was created by "Michael Shilale Architects, LLP" for "Renovation of Rockland Green Administrative Headquarters and Construction of an Immersive Theatre Experience". A valid, current MasterSpec license is required for editing and use of this document for any other project.(22360)

PART 2 - PRODUCTS (Not Used)

PART 3 - EXECUTION

3.1 SCHEDULE OF ALTERNATES

A. Alternate No. 1: Void

B. Alternate No. 2: 100 SF of masonry repointing.

C. Alternate No. 3: Provide glass walls and doors with obscure glass at second floor conference room.

D. Alternate No. 4: Provide roof ballasted solar panel system.

END OF SECTION 012300

Copyright © 2025 by the American Institute of Architects. Warning: This AIA MasterSpec-based document is protected by U.S. Copyright Law and International Treaties. It was created by "Michael Shilale Architects, LLP" for "Renovation of Rockland Green Administrative Headquarters and Construction of an Immersive Theatre Experience". A valid, current MasterSpec license is required for editing and use of this document for any other project.(22360)

SECTION 012500 - SUBSTITUTION PROCEDURES

PART 1 - GENERAL

1.1 RELATED DOCUMENTS

A. Drawings and general provisions of the Contract, including General and Supplementary Conditions and other Division 01 Specification Sections, apply to this Section.

1.2 SUMMARY

A. Section includes administrative and procedural requirements for substitutions.

B. Related Requirements:

1. Section 012100 "Allowances" for products selected under an allowance.
2. Section 012300 "Alternates" for products selected under an alternate.
3. Section 016000 "Product Requirements" for requirements for submitting comparable product submittals for products by listed manufacturers.

1.3 DEFINITIONS

A. Substitutions: Changes in products, materials, equipment, and methods of construction from those required by the Contract Documents.

1. Substitutions for Cause: Changes proposed by Contractor that are required due to changed Project conditions, such as unavailability of product, regulatory changes, or unavailability of required warranty terms.
2. Substitutions for Convenience: Changes proposed by Contractor or Owner that are not required to meet other Project requirements but may offer advantage to Contractor or Owner.

1.4 ACTION SUBMITTALS

A. Substitution Requests: Submit documentation identifying product or fabrication or installation method to be replaced. Include Specification Section number and title and Drawing numbers and titles.

1. Substitution Request Form: Use form provided in Project Manual .
2. Documentation: Show compliance with requirements for substitutions and the following, as applicable:
   a. Statement indicating why specified product or fabrication or installation method cannot be provided, if applicable.

Copyright © 2025 by the American Institute of Architects. Warning: This AIA MasterSpec-based document is protected by U.S. Copyright Law and International Treaties. It was created by "Michael Shilale Architects, LLP" for "Renovation of Rockland Green Administrative Headquarters and Construction of an Immersive Theatre Experience". A valid, current MasterSpec license is required for editing and use of this document for any other project.(22360)

b. Coordination of information, including a list of changes or revisions needed to other parts of the Work and to construction performed by Owner and separate contractors that will be necessary to accommodate proposed substitution.
c. Detailed comparison of significant qualities of proposed substitutions with those of the Work specified. Include annotated copy of applicable Specification Section. Significant qualities may include attributes, such as performance, weight, size, durability, visual effect, sustainable design characteristics, warranties, and specific features and requirements indicated. Indicate deviations, if any, from the Work specified.
d. Product Data, including drawings and descriptions of products and fabrication and installation procedures.
e. Samples, where applicable or requested.
f. Certificates and qualification data, where applicable or requested.
g. List of similar installations for completed projects, with project names and addresses as well as names and addresses of architects and owners.
h. Material test reports from a qualified testing agency, indicating and interpreting test results for compliance with requirements indicated.
i. Research reports evidencing compliance with building code in effect for Project, from ICC-ES .
j. Detailed comparison of Contractor's construction schedule using proposed substitutions with products specified for the Work, including effect on the overall Contract Time. If specified product or method of construction cannot be provided within the Contract Time, include letter from manufacturer, on manufacturer's letterhead, stating date of receipt of purchase order, lack of availability, or delays in delivery.
k. Cost information, including a proposal of change, if any, in the Contract Sum.
l. Contractor's certification that proposed substitution complies with requirements in the Contract Documents, except as indicated in substitution request, is compatible with related materials and is appropriate for applications indicated.
m. Contractor's waiver of rights to additional payment or time that may subsequently become necessary because of failure of proposed substitution to produce indicated results.

3. Architect's Action: If necessary, Architect will request additional information or documentation for evaluation within seven days of receipt of a request for substitution. Architect will notify Contractor through Construction Manager of acceptance or rejection of proposed substitution within 15 days of receipt of request, or seven days of receipt of additional information or documentation, whichever is later.
   a. Forms of Acceptance: Change Order, Construction Change Directive, or Architect's Supplemental Instructions for minor changes in the Work.
   b. Use product specified if Architect does not issue a decision on use of a proposed substitution within time allocated.

1.5 QUALITY ASSURANCE

A. Compatibility of Substitutions: Investigate and document compatibility of proposed substitution with related products and materials. Engage a qualified testing agency to perform compatibility tests recommended by manufacturers.

Copyright © 2025 by the American Institute of Architects. Warning: This AIA MasterSpec-based document is protected by U.S. Copyright Law and International Treaties. It was created by "Michael Shilale Architects, LLP" for "Renovation of Rockland Green Administrative Headquarters and Construction of an Immersive Theatre Experience". A valid, current MasterSpec license is required for editing and use of this document for any other project.(22360)

1.6 PROCEDURES

A. Coordination: Revise or adjust affected work as necessary to integrate work of the approved substitutions.

1.7 SUBSTITUTIONS

A. Substitutions for Cause: Submit requests for substitution immediately on discovery of need for change, but not later than 15 days prior to time required for preparation and review of related submittals.

1. Conditions: Architect will consider Contractor's request for substitution when the following conditions are satisfied. If the following conditions are not satisfied, Architect will return requests without action, except to record noncompliance with these requirements:
   a. Requested substitution is consistent with the Contract Documents and will produce indicated results.
   b. Substitution request is fully documented and properly submitted.
   c. Requested substitution will not adversely affect Contractor's construction schedule.
   d. Requested substitution has received necessary approvals of authorities having jurisdiction.
   e. Requested substitution is compatible with other portions of the Work.
   f. Requested substitution has been coordinated with other portions of the Work.
   g. Requested substitution provides specified warranty.
   h. If requested substitution involves more than one contractor, requested substitution has been coordinated with other portions of the Work, is uniform and consistent, is compatible with other products, and is acceptable to all contractors involved.

B. Substitutions for Convenience: Architect will consider requests for substitution if received within 60 days after commencement of the Work . Requests received after that time may be considered or rejected at discretion of Architect.

1. Conditions: Architect will consider Contractor's request for substitution when the following conditions are satisfied. If the following conditions are not satisfied, Architect will return requests without action, except to record noncompliance with these requirements:
   a. Requested substitution offers Owner a substantial advantage in cost, time, energy conservation, or other considerations, after deducting additional responsibilities Owner must assume. Owner's additional responsibilities may include compensation to Architect for redesign and evaluation services, increased cost of other construction by Owner, and similar considerations.
   b. Requested substitution does not require extensive revisions to the Contract Documents.
   c. Requested substitution is consistent with the Contract Documents and will produce indicated results.
   d. Substitution request is fully documented and properly submitted.
   e. Requested substitution will not adversely affect Contractor's construction schedule.
   f. Requested substitution has received necessary approvals of authorities having jurisdiction.

Copyright © 2025 by the American Institute of Architects. Warning: This AIA MasterSpec-based document is protected by U.S. Copyright Law and International Treaties. It was created by "Michael Shilale Architects, LLP" for "Renovation of Rockland Green Administrative Headquarters and Construction of an Immersive Theatre Experience". A valid, current MasterSpec license is required for editing and use of this document for any other project.(22360)

g. Requested substitution is compatible with other portions of the Work.
h. Requested substitution has been coordinated with other portions of the Work.
i. Requested substitution provides specified warranty.
j. If requested substitution involves more than one contractor, requested substitution has been coordinated with other portions of the Work, is uniform and consistent, is compatible with other products, and is acceptable to all contractors involved.

PART 2 - PRODUCTS (Not Used)

PART 3 - EXECUTION (Not Used)

END OF SECTION 012500

Copyright © 2025 by the American Institute of Architects. Warning: This AIA MasterSpec-based document is protected by U.S. Copyright Law and International Treaties. It was created by "Michael Shilale Architects, LLP" for "Renovation of Rockland Green Administrative Headquarters and Construction of an Immersive Theatre Experience". A valid, current MasterSpec license is required for editing and use of this document for any other project.(22360)

Request for Substitution

This form must be completely filled in with all relevant data by the Subcontractor and submitted to the Project Manager for consideration before any request to change the drawing or specification requirements will be considered.

REFERENCE DATA

Project name: _____ Date of Request: _____

Location: _____ Architect's Job No: _____

Request by (firm): _____

Address: _____

Contact person: _____ Phone: _____ FAX: _____

Subcontract works: _____ Package No: _____

SUBSTITUTION REQUEST DATA

SUBSTITUTION REQUESTED IS FOR:

- ☐ Named product.
- ☐ Product type, material, finish or formulation.
- ☐ Fabrication or installation methods.

Reason for request: _____

PRODUCT / MATERIAL / METHOD FOR WHICH SUBSTITUTION IS REQUESTED IS SHOWN ON THE FOLLOWING DOCUMENTS:

Specification: Section No: _____ Page(s): _____ Clause No(s): _____

Drawings: (List No's of all Drawings affected): _____

COST/BENEFIT ANALYSIS

Describe in detail any alteration to any other part of the Works required by use of the requested substitution:

_____

Total nett cost of any such other required alterations, including overhead and profit: $ _____

Cost of Builder's administration (to be filled in by Builder): $ _____

Cost of Architect's documentation and administration (to be filled in by Project Manager): $ _____

Total cost of such other alterations (to be filled in by Project Manager): $ _____

Total cost savings achieved (from page 2, to be filled in by Project Manager): $ _____

Total cost/benefit to Proprietor (to be filled in by Project Manager): $ _____

Benefits to Proprietor other than financial: _____

ADDITIONAL INFORMATION REQUIRED

COMPLETE THE REVERSE SIDE AS APPLICABLE.

ATTACH THE FOLLOWING INFORMATION:

1 Manufacturer's technical data sheets on proposed products.
2 Manufacturer's standard form of warranty.
3 Letter on manufacturer's letterhead stating that manufacturer will warrant products as specified, if specification

COMPARISON OF OPTIONS

Fill in the following blanks as are applicable to the product, material or method type. As a guide, if the item is mentioned in the Specification as a performance or materials requirement, then information about the proposed substitution is required by the Project Manager to evaluate the proposed substitution. Requests lacking relevant information will be returned without action.

SPECIFIED PRODUCT, MATERIAL OR METHOD

Description: _____

Product Name: _____

Type: _____

Model No: _____

Fire rating (hours): _____

Thickness: _____

Composition: _____

Availability (time): _____

Country of manufacture: _____

Substrate preparation required: _____

Length of warranty available (years): _____

Sound transfer coefficient (STC): _____

Exposure class: _____

Resistance to chemicals (list): _____

Other specified performance criteria (list):

UNIT COST OF PRODUCT / MATERIAL (Must be completed):

$ _____ What _____

Units required: _____ Total value: $ _____

PROPOSED SUBSTITUTION

Description: _____

Product Name: _____

Type: _____

Model No: _____

Fire rating (hours): _____

Thickness: _____

Composition: _____

Availability (time): _____

Country of manufacture: _____

Substrate preparation required: _____

Length of warranty available (years): _____

Sound transfer coefficient (STC): _____

Exposure class: _____

Resistance to chemicals (list): _____

Other specified performance criteria (list):

UNIT COST OF PRODUCT / MATERIAL (Must be completed):

$ _____ What _____

Units required: _____ Total value: $ _____

BUILDER'S REVIEW

I certify that I have checked the above documentation for the proposed Request for Substitution and warrant it to be substantially complete and accurate:

Signed by: _____

Date: _____

PROJECT MANAGER'S ACTION

☐ Request approved.

☐ Request approved subject to qualifications per attached documentation.

☐ Request denied.

☐ Refer Variation Order No: _____

Approved by: _____

Date: _____

Comments: _____

SECTION 012600 - CONTRACT MODIFICATION PROCEDURES

PART 1 - GENERAL

1.1 RELATED DOCUMENTS

A. Drawings and general provisions of the Contract, including General and Supplementary Conditions and other Division 01 Specification Sections, apply to this Section.

1.2 SUMMARY

A. Section includes administrative and procedural requirements for handling and processing Contract modifications.

B. Related Requirements:

1. Section 012500 "Substitution Procedures" for administrative procedures for handling requests for substitutions made after the Contract award.
2. Section 013100 "Project Management and Coordination" for requirements for forms for contract modifications provided as part of web-based Project management software.

1.3 MINOR CHANGES IN THE WORK

A. Architect will issue through Construction Manager supplemental instructions authorizing minor changes in the Work, not involving adjustment to the Contract Sum or the Contract Time, on AIA Document G731. .

1.4 PROPOSAL REQUESTS

A. Owner-Initiated Proposal Requests: Architect will issue a detailed description of proposed changes in the Work that may require adjustment to the Contract Sum or the Contract Time. If necessary, the description will include supplemental or revised Drawings and Specifications.

1. Work Change Proposal Requests issued by Architect are not instructions either to stop work in progress or to execute the proposed change.
2. Within 20 days, when not otherwise specified, after receipt of Proposal Request, submit a quotation estimating cost adjustments to the Contract Sum and the Contract Time necessary to execute the change.
   a. Include a list of quantities of products required or eliminated and unit costs, with total amount of purchases and credits to be made. If requested, furnish survey data to substantiate quantities.
   b. Indicate applicable taxes, delivery charges, equipment rental, and amounts of trade discounts.
   c. Include costs of labor and supervision directly attributable to the change.

Copyright © 2025 by the American Institute of Architects. Warning: This AIA MasterSpec-based document is protected by U.S. Copyright Law and International Treaties. It was created by "Michael Shilale Architects, LLP" for "Renovation of Rockland Green Administrative Headquarters and Construction of an Immersive Theatre Experience". A valid, current MasterSpec license is required for editing and use of this document for any other project.(22360)

d. Include an updated Contractor's construction schedule that indicates the effect of the change, including, but not limited to, changes in activity duration, start and finish times, and activity relationship. Use available total float before requesting an extension of the Contract Time.
e. Quotation Form: Use forms acceptable to Architect .

B. Contractor-Initiated Proposals: If latent or changed conditions require modifications to the Contract, Contractor may initiate a claim by submitting a request for a change to Architect .

1. Include a statement outlining reasons for the change and the effect of the change on the Work. Provide a complete description of the proposed change. Indicate the effect of the proposed change on the Contract Sum and the Contract Time.
2. Include a list of quantities of products required or eliminated and unit costs, with total amount of purchases and credits to be made. If requested, furnish survey data to substantiate quantities.
3. Indicate applicable taxes, delivery charges, equipment rental, and amounts of trade discounts.
4. Include costs of labor and supervision directly attributable to the change.
5. Include an updated Contractor's construction schedule that indicates the effect of the change, including, but not limited to, changes in activity duration, start and finish times, and activity relationship. Use available total float before requesting an extension of the Contract Time.
6. Comply with requirements in Section 012500 "Substitution Procedures" if the proposed change requires substitution of one product or system for product or system specified.
7. Proposal Request Form: Use form acceptable to Architect .

1.5 ADMINISTRATIVE CHANGE ORDERS

A. Allowance Adjustment: See Section 012100 "Allowances" for administrative procedures for preparation of Change Order Proposal for adjusting the Contract Sum to reflect actual costs of allowances.

B. Unit-Price Adjustment: See Section 012200 "Unit Prices" for administrative procedures for preparation of Change Order Proposal for adjusting the Contract Sum to reflect measured scope of unit-price work.

1.6 CHANGE ORDER PROCEDURES

A. On Owner's approval of a Work Change Proposal Request, Architect will issue a Change Order for signatures of Owner and Contractor on AIA Document G731 .

1.7 CONSTRUCTION CHANGE DIRECTIVE

A. Construction Change Directive: Architect may issue a Construction Change Directive on AIA Document G714CMa . Construction Change Directive instructs Contractor to proceed with a change in the Work, for subsequent inclusion in a Change Order.

Copyright © 2025 by the American Institute of Architects. Warning: This AIA MasterSpec-based document is protected by U.S. Copyright Law and International Treaties. It was created by "Michael Shilale Architects, LLP" for "Renovation of Rockland Green Administrative Headquarters and Construction of an Immersive Theatre Experience". A valid, current MasterSpec license is required for editing and use of this document for any other project.(22360)

1. Construction Change Directive contains a complete description of change in the Work. It also designates method to be followed to determine change in the Contract Sum or the Contract Time.

B. Documentation: Maintain detailed records on a time and material basis of work required by the Construction Change Directive.

1. After completion of change, submit an itemized account and supporting data necessary to substantiate cost and time adjustments to the Contract.

PART 2 - PRODUCTS (Not Used)

PART 3 - EXECUTION (Not Used)

END OF SECTION 012600

Copyright © 2025 by the American Institute of Architects. Warning: This AIA MasterSpec-based document is protected by U.S. Copyright Law and International Treaties. It was created by "Michael Shilale Architects, LLP" for "Renovation of Rockland Green Administrative Headquarters and Construction of an Immersive Theatre Experience". A valid, current MasterSpec license is required for editing and use of this document for any other project.(22360)

SECTION 012900 - PAYMENT PROCEDURES

PART 1 - GENERAL

1.1 RELATED DOCUMENTS

A. Drawings and general provisions of the Contract, including General and Supplementary Conditions and other Division 01 Specification Sections, apply to this Section.

1.2 SUMMARY

A. Section includes administrative and procedural requirements necessary to prepare and process Applications for Payment.

B. Related Requirements:

1. Section 012100 "Allowances" for procedural requirements governing the handling and processing of allowances.
2. Section 012200 "Unit Prices" for administrative requirements governing the use of unit prices.
3. Section 012600 "Contract Modification Procedures" for administrative procedures for handling changes to the Contract.
4. Section 013200 "Construction Progress Documentation" for administrative requirements governing the preparation and submittal of the Contractor's construction schedule.

1.3 SCHEDULE OF VALUES

A. Coordination: Coordinate preparation of the schedule of values with preparation of Contractor's construction schedule.

1. Coordinate line items in the schedule of values with items required to be indicated as separate activities in Contractor's construction schedule.
2. Submit the schedule of values to Architect through Construction Manager at earliest possible date, but no later than seven days before the date scheduled for submittal of initial Applications for Payment.
3. Subschedules for Phased Work: Where the Work is separated into phases requiring separately phased payments, provide subschedules showing values coordinated with each phase of payment.
4. Subschedules for Separate Elements of Work: Where the Contractor's construction schedule defines separate elements of the Work, provide subschedules showing values coordinated with each element.
5. Subschedules for Separate Design Contracts: Where the Owner has retained design professionals under separate contracts who will each provide certification of payment requests, provide subschedules showing values coordinated with the scope of each design services contract, as described in Section 011000 "Summary."

Copyright © 2025 by the American Institute of Architects. Warning: This AIA MasterSpec-based document is protected by U.S. Copyright Law and International Treaties. It was created by "Michael Shilale Architects, LLP" for "Renovation of Rockland Green Administrative Headquarters and Construction of an Immersive Theatre Experience". A valid, current MasterSpec license is required for editing and use of this document for any other project.(22360)

1.4 APPLICATIONS FOR PAYMENT

A. Each Application for Payment following the initial Application for Payment shall be consistent with previous applications and payments, as certified by Architect and Construction Manager and paid for by Owner.

B. Payment Application Times: The date for each progress payment is indicated in the Owner/Contractor Agreement. The period of construction work covered by each Application for Payment is the period indicated in the Agreement.

C. Application for Payment Forms: Use AIA Document G702 and AIA Document G703 as form for Applications for Payment.

D. Application Preparation: Complete every entry on form. Notarize and execute by a person authorized to sign legal documents on behalf of Contractor. Architect will return incomplete applications without action.

1. Entries shall match data on the schedule of values and Contractor's construction schedule. Use updated schedules if revisions were made.
2. Include amounts for work completed following previous Application for Payment, whether or not payment has been received. Include only amounts for work completed at time of Application for Payment.
3. Include amounts of Change Orders and Construction Change Directives issued before last day of construction period covered by application.
4. Indicate separate amounts for work being carried out under Owner-requested project acceleration.

E. Stored Materials: Include in Application for Payment amounts applied for materials or equipment purchased or fabricated and stored, but not yet installed. Differentiate between items stored on-site and items stored off-site.

1. Provide certificate of insurance, evidence of transfer of title to Owner, and consent of surety to payment for stored materials.
2. Provide supporting documentation that verifies amount requested, such as paid invoices. Match amount requested with amounts indicated on documentation; do not include overhead and profit on stored materials.
3. Provide summary documentation for stored materials indicating the following:
   a. Value of materials previously stored and remaining stored as of date of previous Applications for Payment.
   b. Value of previously stored materials put in place after date of previous Application for Payment and on or before date of current Application for Payment.
   c. Value of materials stored since date of previous Application for Payment and remaining stored as of date of current Application for Payment.

F. Transmittal: Submit three signed and notarized original copies of each Application for Payment to Construction Manager by a method ensuring receipt. One copy shall include waivers of lien and similar attachments if required.

1. Transmit each copy with a transmittal form listing attachments and recording appropriate information about application.

Copyright © 2025 by the American Institute of Architects. Warning: This AIA MasterSpec-based document is protected by U.S. Copyright Law and International Treaties. It was created by "Michael Shilale Architects, LLP" for "Renovation of Rockland Green Administrative Headquarters and Construction of an Immersive Theatre Experience". A valid, current MasterSpec license is required for editing and use of this document for any other project.(22360)

G. Waivers of Mechanic's Lien: With each Application for Payment, submit waivers of mechanic's lien from entities lawfully entitled to file a mechanic's lien arising out of the Contract and related to the Work covered by the payment .

1. Submit partial waivers on each item for amount requested in previous application, after deduction for retainage, on each item.
2. When an application shows completion of an item, submit conditional final or full waivers.
3. Owner reserves the right to designate which entities involved in the Work must submit waivers.
4. Submit final Application for Payment with or preceded by conditional final waivers from every entity involved with performance of the Work covered by the application who is lawfully entitled to a lien.
5. Waiver Forms: Submit executed waivers of lien on forms acceptable to Owner.

H. Initial Application for Payment: Administrative actions and submittals that must precede or coincide with submittal of first Application for Payment include the following:

1. List of subcontractors.
2. Schedule of values.
3. Contractor's construction schedule (preliminary if not final).
4. Combined Contractor's construction schedule (preliminary if not final) incorporating Work of multiple contracts, with indication of acceptance of schedule by each Contractor.
5. Products list (preliminary if not final).
6. Sustainable design action plans, including preliminary project materials cost data.
7. Schedule of unit prices.
8. Submittal schedule (preliminary if not final).
9. List of Contractor's staff assignments.
10. List of Contractor's principal consultants.
11. Copies of building permits.
12. Copies of authorizations and licenses from authorities having jurisdiction for performance of the Work.
13. Initial progress report.
14. Report of preconstruction conference.

I. Application for Payment at Substantial Completion: After Architect issues the Certificate of Substantial Completion, submit an Application for Payment showing 100 percent completion for portion of the Work claimed as substantially complete.

1. Include documentation supporting claim that the Work is substantially complete and a statement showing an accounting of changes to the Contract Sum.
   a. Complete administrative actions, submittals, and Work preceding this application, as described in Section 017700 "Closeout Procedures."
2. This application shall reflect Certificate(s) of Substantial Completion issued previously for Owner occupancy of designated portions of the Work.

J. Final Payment Application: After completing Project closeout requirements, submit final Application for Payment with releases and supporting documentation not previously submitted and accepted, including, but not limited, to the following:

Copyright © 2025 by the American Institute of Architects. Warning: This AIA MasterSpec-based document is protected by U.S. Copyright Law and International Treaties. It was created by "Michael Shilale Architects, LLP" for "Renovation of Rockland Green Administrative Headquarters and Construction of an Immersive Theatre Experience". A valid, current MasterSpec license is required for editing and use of this document for any other project.(22360)

1. Evidence of completion of Project closeout requirements.
2. Certification of completion of final punch list items.
3. Insurance certificates for products and completed operations where required and proof that taxes, fees, and similar obligations were paid.
4. Updated final statement, accounting for final changes to the Contract Sum.
5. AIA Document G706.
6. AIA Document G706A.
7. AIA Document G707.
8. Evidence that claims have been settled.
9. Final meter readings for utilities, a measured record of stored fuel, and similar data as of date of Substantial Completion or when Owner took possession of and assumed responsibility for corresponding elements of the Work.
10. Final liquidated damages settlement statement.
11. Proof that taxes, fees, and similar obligations are paid.
12. Waivers and releases.

PART 2 - PRODUCTS (Not Used)

PART 3 - EXECUTION (Not Used)

END OF SECTION 012900

Copyright © 2025 by the American Institute of Architects. Warning: This AIA MasterSpec-based document is protected by U.S. Copyright Law and International Treaties. It was created by "Michael Shilale Architects, LLP" for "Renovation of Rockland Green Administrative Headquarters and Construction of an Immersive Theatre Experience". A valid, current MasterSpec license is required for editing and use of this document for any other project.(22360)

SECTION 013100 - PROJECT MANAGEMENT AND COORDINATION

PART 1 - GENERAL

1.1 RELATED DOCUMENTS

A. Drawings and general provisions of the Contract, including General and Supplementary Conditions and other Division 01 Specification Sections, apply to this Section.

1.2 SUMMARY

A. Section includes administrative provisions for coordinating construction operations on Project, including, but not limited to, the following:

1. General coordination procedures.
2. Coordination drawings.
3. RFIs.
4. Digital project management procedures.
5. Project meetings.

B. Each contractor shall participate in coordination requirements. Certain areas of responsibility are assigned to a specific contractor.

C. Related Requirements:

1. Section 011200 "Multiple Contract Summary" for a description of the division of work among separate contracts and responsibility for coordination activities not in this Section.
2. Section 013200 "Construction Progress Documentation" for preparing and submitting Contractor's construction schedule.
3. Section 017300 "Execution" for procedures for coordinating general installation and field-engineering services, including establishment of benchmarks and control points.
4. Section 017700 "Closeout Procedures" for coordinating closeout of the Contract.
5. Section 019113 "General Commissioning Requirements" for coordinating the Work with Owner's Commissioning Authority.

1.3 DEFINITIONS

A. RFI: Request for Information. Request from Owner, Construction Manager, Architect, or Contractor seeking information required by or clarifications of the Contract Documents.

Copyright © 2025 by the American Institute of Architects. Warning: This AIA MasterSpec-based document is protected by U.S. Copyright Law and International Treaties. It was created by "Michael Shilale Architects, LLP" for "Renovation of Rockland Green Administrative Headquarters and Construction of an Immersive Theatre Experience". A valid, current MasterSpec license is required for editing and use of this document for any other project.(22360)

1.4 INFORMATIONAL SUBMITTALS

A. Subcontract List: Prepare a written summary identifying individuals or firms proposed for each portion of the Work, including those who are to furnish products or equipment fabricated to a special design. Include the following information in tabular form:

1. Name, address, telephone number, and email address of entity performing subcontract or supplying products.
2. Number and title of related Specification Section(s) covered by subcontract.
3. Drawing number and detail references, as appropriate, covered by subcontract.

B. Key Personnel Names: Within 15 days of starting construction operations, submit a list of key personnel assignments, including superintendent and other personnel in attendance at Project site. Identify individuals and their duties and responsibilities; list addresses, cellular telephone numbers, and e-mail addresses. Provide names, addresses, and telephone numbers of individuals assigned as alternates in the absence of individuals assigned to Project.

1. Post copies of list in Project meeting room, in temporary field office, and in prominent location in each built facility. Keep list current at all times.

1.5 GENERAL COORDINATION PROCEDURES

A. Coordination of Multiple Contracts: Each contractor shall cooperate with Project coordinator, who shall coordinate its construction operations with those of other contractors and entities to ensure efficient and orderly installation of each part of the Work. Each contractor shall coordinate its own operations with operations included in different Sections that depend on each other for proper installation, connection, and operation.

1. Schedule construction operations in sequence required to obtain the best results, where installation of one part of the Work depends on installation of other components, before or after its own installation.
2. Coordinate installation of different components with other contractors to ensure maximum performance and accessibility for required maintenance, service, and repair.
3. Make adequate provisions to accommodate items scheduled for later installation.

B. Prepare memoranda for distribution to each party involved, outlining special procedures required for coordination. Include such items as required notices, reports, and list of attendees at meetings.

1. Prepare similar memoranda for Owner and separate contractors if coordination of their Work is required.

C. Administrative Procedures: Coordinate scheduling and timing of required administrative procedures with other construction activities and scheduled activities of other contractors and direction of Project coordinator to avoid conflicts and to ensure orderly progress of the Work. Such administrative activities include, but are not limited to, the following:

1. Preparation of Contractor's construction schedule.
2. Preparation of the schedule of values.

Copyright © 2025 by the American Institute of Architects. Warning: This AIA MasterSpec-based document is protected by U.S. Copyright Law and International Treaties. It was created by "Michael Shilale Architects, LLP" for "Renovation of Rockland Green Administrative Headquarters and Construction of an Immersive Theatre Experience". A valid, current MasterSpec license is required for editing and use of this document for any other project.(22360)

3. Installation and removal of temporary facilities and controls.
4. Delivery and processing of submittals.
5. Progress meetings.
6. Preinstallation conferences.
7. Project closeout activities.
8. Startup and adjustment of systems.

1.6 COORDINATION DRAWINGS

A. Coordination Drawings, General: Prepare coordination drawings according to requirements in individual Sections, and additionally where installation is not completely indicated on Shop Drawings, where limited space availability necessitates coordination, or if coordination is required to facilitate integration of products and materials fabricated or installed by more than one entity.

1. Content: Project-specific information, drawn accurately to a scale large enough to indicate and resolve conflicts. Do not base coordination drawings on standard printed data. Include the following information, as applicable:
   a. Use applicable Drawings as a basis for preparation of coordination drawings. Prepare sections, elevations, and details as needed to describe relationship of various systems and components.
   b. Coordinate the addition of trade-specific information to coordination drawings by multiple contractors in a sequence that best provides for coordination of the information and resolution of conflicts between installed components before submitting for review.
   c. Indicate functional and spatial relationships of components of architectural, structural, civil, mechanical, and electrical systems.
   d. Indicate space requirements for routine maintenance and for anticipated replacement of components during the life of the installation.
   e. Show location and size of access doors required for access to concealed dampers, valves, and other controls.
   f. Indicate required installation sequences.
   g. Indicate dimensions shown on Drawings. Specifically note dimensions that appear to be in conflict with submitted equipment and minimum clearance requirements. Provide alternative sketches to Architect indicating proposed resolution of such conflicts. Minor dimension changes and difficult installations will not be considered changes to the Contract.

B. Coordination Drawing Organization: Organize coordination drawings as follows:

1. Floor Plans and Reflected Ceiling Plans: Show architectural and structural elements, and mechanical, plumbing, fire-protection, fire-alarm, and electrical Work. Show locations of visible ceiling-mounted devices relative to acoustical ceiling grid. Supplement plan drawings with section drawings where required to adequately represent the Work.
2. Plenum Space: Indicate subframing for support of ceiling and wall systems, mechanical and electrical equipment, and related Work. Locate components within plenums to accommodate layout of light fixtures and other components indicated on Drawings. Indicate areas of conflict between light fixtures and other components.

Copyright © 2025 by the American Institute of Architects. Warning: This AIA MasterSpec-based document is protected by U.S. Copyright Law and International Treaties. It was created by "Michael Shilale Architects, LLP" for "Renovation of Rockland Green Administrative Headquarters and Construction of an Immersive Theatre Experience". A valid, current MasterSpec license is required for editing and use of this document for any other project.(22360)

3. Mechanical Rooms: Provide coordination drawings for mechanical rooms, showing plans and elevations of mechanical, plumbing, fire-protection, fire-alarm, and electrical equipment.
4. Structural Penetrations: Indicate penetrations and openings required for all disciplines.
5. Slab Edge and Embedded Items: Indicate slab edge locations and sizes and locations of embedded items for metal fabrications, sleeves, anchor bolts, bearing plates, angles, door floor closers, slab depressions for floor finishes, curbs and housekeeping pads, and similar items.
6. Mechanical and Plumbing Work: Show the following:
   a. Sizes and bottom elevations of ductwork, piping, and conduit runs, including insulation, bracing, flanges, and support systems.
   b. Dimensions of major components, such as dampers, valves, diffusers, access doors, cleanouts and electrical distribution equipment.
   c. Fire-rated enclosures around ductwork.
7. Electrical Work: Show the following:
   a. Runs of vertical and horizontal conduit 1-1/4 inches in diameter and larger.
   b. Light fixture, exit light, emergency battery pack, smoke detector, and other fire-alarm locations.
   c. Panel board, switchboard, switchgear, transformer, busway, generator, and motor-control center locations.
   d. Location of pull boxes and junction boxes, dimensioned from column center lines.
8. Fire-Protection System: Show the following:
   a. Locations of standpipes, mains piping, branch lines, pipe drops, and sprinkler heads.
9. Review: Architect will review coordination drawings to confirm that, in general, the Work is being coordinated, but not for the details of the coordination, which are Contractor's responsibility. If Architect determines that coordination drawings are not being prepared in sufficient scope or detail, or are otherwise deficient, Architect will so inform Contractor, who shall make suitable modifications and resubmit.
10. Coordination Drawing Prints: Prepare coordination drawing prints according to requirements in Section 013300 "Submittal Procedures."

C. Coordination Digital Data Files: Prepare coordination digital data files according to the following requirements:

1. File Preparation Format:
   a. DWG , Version , operating in Microsoft Windows operating system.
2. File Submittal Format: Submit or post coordination drawing files using PDF format.
3. Architect will furnish Contractor one set of digital data files of Drawings for use in preparing coordination digital data files.
   a. Architect makes no representations as to the accuracy or completeness of digital data files as they relate to Drawings.
   b. Digital Data Software Program: Drawings are available in Autocad 2020. .
   c. Contractor shall execute a data licensing agreement in the form of AIA Document C106 Agreement form acceptable to Owner and Architect.

Copyright © 2025 by the American Institute of Architects. Warning: This AIA MasterSpec-based document is protected by U.S. Copyright Law and International Treaties. It was created by "Michael Shilale Architects, LLP" for "Renovation of Rockland Green Administrative Headquarters and Construction of an Immersive Theatre Experience". A valid, current MasterSpec license is required for editing and use of this document for any other project.(22360)

1.7 REQUEST FOR INFORMATION (RFI)

A. General: Immediately on discovery of the need for additional information, clarification, or interpretation of the Contract Documents, Contractor shall prepare and submit an RFI in the form specified.

1. Architect will return without response those RFIs submitted to Architect by other entities controlled by Contractor.
2. Coordinate and submit RFIs in a prompt manner to avoid delays in Contractor's work or work of subcontractors.

B. Content of the RFI: Include a detailed, legible description of item needing information or interpretation and the following:

1. Project name.
2. Owner name.
3. Owner's Project number.
4. Name of Architect and Construction Manager.
5. Architect's Project number.
6. Date.
7. Name of Contractor.
8. RFI number, numbered sequentially.
9. RFI subject.
10. Specification Section number and title and related paragraphs, as appropriate.
11. Drawing number and detail references, as appropriate.
12. Field dimensions and conditions, as appropriate.
13. Contractor's suggested resolution. If Contractor's suggested resolution impacts the Contract Time or the Contract Sum, Contractor shall state impact in the RFI.
14. Contractor's signature.
15. Attachments: Include sketches, descriptions, measurements, photos, Product Data, Shop Drawings, coordination drawings, and other information necessary to fully describe items needing interpretation.
    a. Include dimensions, thicknesses, structural grid references, and details of affected materials, assemblies, and attachments on attached sketches.

C. RFI Forms: Form bound in Project Manual .

1. Attachments shall be electronic files in PDF format.

D. Architect's and Construction Manager's Action: Architect and Construction Manager will review each RFI, determine action required, and respond. Allow seven days for Architect's response for each RFI. RFIs received by Architect or Construction Manager after 1:00 p.m. will be considered as received the following working day.

1. The following Contractor-generated RFIs will be returned without action:
    a. Requests for approval of submittals.
    b. Requests for approval of substitutions.
    c. Requests for approval of Contractor's means and methods.
    d. Requests for coordination information already indicated in the Contract Documents.

Copyright © 2025 by the American Institute of Architects. Warning: This AIA MasterSpec-based document is protected by U.S. Copyright Law and International Treaties. It was created by "Michael Shilale Architects, LLP" for "Renovation of Rockland Green Administrative Headquarters and Construction of an Immersive Theatre Experience". A valid, current MasterSpec license is required for editing and use of this document for any other project.(22360)

e. Requests for adjustments in the Contract Time or the Contract Sum.
f. Requests for interpretation of Architect's actions on submittals.
g. Incomplete RFIs or inaccurately prepared RFIs.

2. Architect's action may include a request for additional information, in which case Architect's time for response will date from time of receipt by Architect or Construction Manager of additional information.
3. Architect's action on RFIs that may result in a change to the Contract Time or the Contract Sum may be eligible for Contractor to submit Change Proposal according to Section 012600 "Contract Modification Procedures."
   a. If Contractor believes the RFI response warrants change in the Contract Time or the Contract Sum, notify Architect and Construction Manager in writing within 5 days of receipt of the RFI response.

E. RFI Log: Prepare, maintain, and submit a tabular log of RFIs organized by the RFI number. Submit log monthly .

1. Project name.
2. Name and address of Contractor.
3. Name and address of Architect and Construction Manager.
4. RFI number, including RFIs that were returned without action or withdrawn.
5. RFI description.
6. Date the RFI was submitted.
7. Date Architect's and Construction Manager's response was received.
8. Identification of related Minor Change in the Work, Construction Change Directive, and Proposal Request, as appropriate.
9. Identification of related Field Order, Work Change Directive, and Proposal Request, as appropriate.

F. On receipt of Architect's and Construction Manager's action, update the RFI log and immediately distribute the RFI response to affected parties. Review response and notify Architect and Construction Manager within seven days if Contractor disagrees with response.

1.8 DIGITAL PROJECT MANAGEMENT PROCEDURES

A. Use of Architect's Digital Data Files: Digital data files of Architect's CAD drawings will be provided by Architect for Contractor's use during construction.

1. Digital data files may be used by Contractor in preparing coordination drawings, Shop Drawings, and Project Record Drawings.
2. Architect makes no representations as to the accuracy or completeness of digital data files as they relate to Contract Drawings.
3. Digital Drawing Software Program: Contract Drawings are available in Autocad 2020 .
4. Contractor shall execute a data licensing agreement in the form of AIA Document C106 Digital Data Licensing Agreement .
   a. Subcontractors and other parties granted access by Contractor to Architect's digital data files shall execute a data licensing agreement in the form of AIA Document C106 .
5. The following digital data files will be furnished for each appropriate discipline:
   a. Floor plans.

Copyright © 2025 by the American Institute of Architects. Warning: This AIA MasterSpec-based document is protected by U.S. Copyright Law and International Treaties. It was created by "Michael Shilale Architects, LLP" for "Renovation of Rockland Green Administrative Headquarters and Construction of an Immersive Theatre Experience". A valid, current MasterSpec license is required for editing and use of this document for any other project.(22360)

b. Reflected ceiling plans.

B. PDF Document Preparation: Where PDFs are required to be submitted to Architect, prepare as follows:

1. Assemble complete submittal package into a single indexed file, incorporating submittal requirements of a single Specification Section and transmittal form with links enabling navigation to each item.
2. Name file with submittal number or other unique identifier, including revision identifier.
3. Certifications: Where digitally submitted certificates and certifications are required, provide a digital signature with digital certificate on where indicated.

1.9 PROJECT MEETINGS

A. General: Construction Manager will schedule and conduct meetings and conferences at Project site unless otherwise indicated.

1. Attendees: Inform participants and others involved, and individuals whose presence is required, of date and time of each meeting. Notify Owner and Architect of scheduled meeting dates and times a minimum of seven days prior to meeting.
2. Agenda: Prepare the meeting agenda. Distribute the agenda to all invited attendees.
3. Minutes: Construction Manager will record significant discussions and agreements achieved. Distribute the meeting minutes to everyone concerned, including Owner and Architect, within three days of the meeting.

B. Preconstruction Conference: Construction Manager will schedule and conduct a preconstruction conference before starting construction, at a time convenient to Owner and Architect, but no later than 15 days after execution of the Agreement.

1. Attendees: Authorized representatives of Owner , Construction Manager, Architect, and their consultants; Contractor and its superintendent; major subcontractors; suppliers; and other concerned parties shall attend the conference. Participants at the conference shall be familiar with Project and authorized to conclude matters relating to the Work.
2. Agenda: Discuss items of significance that could affect progress, including the following:
   a. Responsibilities and personnel assignments.
   b. Tentative construction schedule.
   c. Phasing.
   d. Critical work sequencing and long lead items.
   e. Designation of key personnel and their duties.
   f. Lines of communications.
   g. Use of web-based Project software.
   h. Procedures for processing field decisions and Change Orders.
   i. Procedures for RFIs.
   j. Procedures for testing and inspecting.
   k. Procedures for processing Applications for Payment.
   l. Distribution of the Contract Documents.
   m. Submittal procedures.
   n. Preparation of Record Documents.
   o. Use of the premises and existing building.

Copyright © 2025 by the American Institute of Architects. Warning: This AIA MasterSpec-based document is protected by U.S. Copyright Law and International Treaties. It was created by "Michael Shilale Architects, LLP" for "Renovation of Rockland Green Administrative Headquarters and Construction of an Immersive Theatre Experience". A valid, current MasterSpec license is required for editing and use of this document for any other project.(22360)

p. Work restrictions.
q. Working hours.
r. Owner's occupancy requirements.
s. Responsibility for temporary facilities and controls.
t. Procedures for moisture and mold control.
u. Procedures for disruptions and shutdowns.
v. Construction waste management and recycling.
w. Parking availability.
x. Office, work, and storage areas.
y. Equipment deliveries and priorities.
z. First aid.
aa. Security.
bb. Progress cleaning.

3. Minutes: Entity responsible for conducting meeting will record and distribute meeting minutes.

C. Preinstallation Conferences: Conduct a preinstallation conference at Project site before each construction activity when required by other Sections and when required for coordination with other construction.

1. Attendees: Installer and representatives of manufacturers and fabricators involved in or affected by the installation and its coordination or integration with other materials and installations that have preceded or will follow, shall attend the meeting. Advise Architect , Construction Manager of scheduled meeting dates.
2. Agenda: Review progress of other construction activities and preparations for the particular activity under consideration, including requirements for the following:
   a. Contract Documents.
   b. Options.
   c. Related RFIs.
   d. Related Change Orders.
   e. Purchases.
   f. Deliveries.
   g. Submittals.
   h. Review of mockups.
   i. Possible conflicts.
   j. Compatibility requirements.
   k. Time schedules.
   l. Weather limitations.
   m. Manufacturer's written instructions.
   n. Warranty requirements.
   o. Compatibility of materials.
   p. Acceptability of substrates.
   q. Temporary facilities and controls.
   r. Space and access limitations.
   s. Regulations of authorities having jurisdiction.
   t. Testing and inspecting requirements.
   u. Installation procedures.
   v. Coordination with other work.
   w. Required performance results.
   x. Protection of adjacent work.

Copyright © 2025 by the American Institute of Architects. Warning: This AIA MasterSpec-based document is protected by U.S. Copyright Law and International Treaties. It was created by "Michael Shilale Architects, LLP" for "Renovation of Rockland Green Administrative Headquarters and Construction of an Immersive Theatre Experience". A valid, current MasterSpec license is required for editing and use of this document for any other project.(22360)

y. Protection of construction and personnel.

3. Record significant conference discussions, agreements, and disagreements, including required corrective measures and actions.
4. Reporting: Distribute minutes of the meeting to each party present and to other parties requiring information.
5. Do not proceed with installation if the conference cannot be successfully concluded. Initiate whatever actions are necessary to resolve impediments to performance of the Work and reconvene the conference at earliest feasible date.

D. Project Closeout Conference: Construction Manager will schedule and conduct a project closeout conference, at a time convenient to Owner and Architect, but no later than 90 days prior to the scheduled date of Substantial Completion.

1. Conduct the conference to review requirements and responsibilities related to Project closeout.
2. Attendees: Authorized representatives of Owner, Construction Manager, Architect, and their consultants; Contractor and its superintendent; major subcontractors; suppliers; and other concerned parties shall attend the meeting. Participants at the meeting shall be familiar with Project and authorized to conclude matters relating to the Work.
3. Agenda: Discuss items of significance that could affect or delay Project closeout, including the following:
   a. Preparation of Record Documents.
   b. Procedures required prior to inspection for Substantial Completion and for final inspection for acceptance.
   c. Procedures for completing and archiving web-based Project software site data files.
   d. Submittal of written warranties.
   e. Requirements for completing sustainable design documentation.
   f. Requirements for preparing operations and maintenance data.
   g. Requirements for delivery of material samples, attic stock, and spare parts.
   h. Requirements for demonstration and training.
   i. Preparation of Contractor's punch list.
   j. Procedures for processing Applications for Payment at Substantial Completion and for final payment.
   k. Submittal procedures.
   l. Coordination of separate contracts.
   m. Owner's partial occupancy requirements.
   n. Installation of Owner's furniture, fixtures, and equipment.
   o. Responsibility for removing temporary facilities and controls.
4. Minutes: Entity conducting meeting will record and distribute meeting minutes.

E. Progress Meetings: Construction Manager will conduct progress meetings at regular intervals.

1. Coordinate dates of meetings with preparation of payment requests.
2. Attendees: In addition to representatives of Owner , Construction Manager, and Architect, each contractor, subcontractor, supplier, and other entity concerned with current progress or involved in planning, coordination, or performance of future activities shall be represented at these meetings. All participants at the meeting shall be familiar with Project and authorized to conclude matters relating to the Work.

Copyright © 2025 by the American Institute of Architects. Warning: This AIA MasterSpec-based document is protected by U.S. Copyright Law and International Treaties. It was created by "Michael Shilale Architects, LLP" for "Renovation of Rockland Green Administrative Headquarters and Construction of an Immersive Theatre Experience". A valid, current MasterSpec license is required for editing and use of this document for any other project.(22360)

3. Agenda: Review and correct or approve minutes of previous progress meeting. Review other items of significance that could affect progress. Include topics for discussion as appropriate to status of Project.
   a. Contractor's Construction Schedule: Review progress since the last meeting. Determine whether each activity is on time, ahead of schedule, or behind schedule, in relation to Contractor's construction schedule. Determine how construction behind schedule will be expedited; secure commitments from parties involved to do so. Discuss whether schedule revisions are required to ensure that current and subsequent activities will be completed within the Contract Time.
      1) Review schedule for next period.
   b. Review present and future needs of each entity present, including the following:
      1) Interface requirements.
      2) Sequence of operations.
      3) Status of submittals.
      4) Status of sustainable design documentation.
      5) Deliveries.
      6) Off-site fabrication.
      7) Access.
      8) Site use.
      9) Temporary facilities and controls.
      10) Progress cleaning.
      11) Quality and work standards.
      12) Status of correction of deficient items.
      13) Field observations.
      14) Status of RFIs.
      15) Status of Proposal Requests.
      16) Pending changes.
      17) Status of Change Orders.
      18) Pending claims and disputes.
      19) Documentation of information for payment requests.
4. Minutes: Entity responsible for conducting the meeting will record and distribute the meeting minutes to each party present and to parties requiring information.
   a. Schedule Updating: Revise Contractor's construction schedule after each progress meeting, where revisions to the schedule have been made or recognized. Issue revised schedule concurrently with the report of each meeting.

F. Coordination Meetings: Project Coordinator will conduct Project coordination meetings at regular intervals. Project coordination meetings are in addition to specific meetings held for other purposes, such as progress meetings and preinstallation conferences.

1. Agenda: Review and correct or approve minutes of the previous coordination meeting. Review other items of significance that could affect progress. Include topics for discussion as appropriate to status of Project.
   a. Combined Contractor's Construction Schedule: Review progress since the last coordination meeting. Determine whether each contract is on time, ahead of schedule, or behind schedule, in relation to combined Contractor's construction schedule. Determine how construction behind schedule will be expedited; secure commitments from parties involved to do so. Discuss whether schedule revisions are required to ensure that current and subsequent activities will be completed within the Contract Time.

Copyright © 2025 by the American Institute of Architects. Warning: This AIA MasterSpec-based document is protected by U.S. Copyright Law and International Treaties. It was created by "Michael Shilale Architects, LLP" for "Renovation of Rockland Green Administrative Headquarters and Construction of an Immersive Theatre Experience". A valid, current MasterSpec license is required for editing and use of this document for any other project.(22360)

b. Schedule Updating: Revise combined Contractor's construction schedule after each coordination meeting, where revisions to the schedule have been made or recognized. Issue revised schedule concurrently with report of each meeting.

c. Review present and future needs of each contractor present, including the following:
   1) Interface requirements.
   2) Sequence of operations.
   3) Status of submittals.
   4) Deliveries.
   5) Off-site fabrication.
   6) Access.
   7) Site use.
   8) Temporary facilities and controls.
   9) Work hours.
   10) Hazards and risks.
   11) Progress cleaning.
   12) Quality and work standards.
   13) Status of RFIs.
   14) Proposal Requests.
   15) Change Orders.
   16) Pending changes.

2. Reporting: Record meeting results and distribute copies to everyone in attendance and to others affected by decisions or actions resulting from each meeting.

PART 2 - PRODUCTS (Not Used)

PART 3 - EXECUTION (Not Used)

END OF SECTION 013100

Copyright © 2025 by the American Institute of Architects. Warning: This AIA MasterSpec-based document is protected by U.S. Copyright Law and International Treaties. It was created by "Michael Shilale Architects, LLP" for "Renovation of Rockland Green Administrative Headquarters and Construction of an Immersive Theatre Experience". A valid, current MasterSpec license is required for editing and use of this document for any other project.(22360)

Michael Shilale, AIA, LEED
John Cirilli, AIA

REQUEST FOR INFORMATION

MICHAEL SHILALE ARCHITECTS, LLP

140 Park Avenue ☐ New City, New York 10956 ☐ Tel 845-708-9200 ☐ Fax 845-708-9222 ☐ E-mail info@shilale.com

Send all RFI's in writing to Michael Shilale Architects, LLP at the above address/fax number. **Only this form will be accepted, and no questions will be entertained via telephone. By submitting this Request for Information, the Contractor is stating that they have performed a thorough review of the drawings and specifications and the information requested is not contained in the construction documents.**

Project:		**RFI No.**
MSA File No.:		
NYSED No.:		
Contractor:		
Contract for:	Hazardous Materials Abatement ☐ Demolition ☐ Site Construction ☐ General Construction ☐ Plumbing ☐ Mechanical ☐ Electrical ☐ Other ☐	

Specification Reference:	**Drawing Reference:**

Description, complete with backup information as needed to fully convey the issue: ☐ **Sketch/Information Attached**
Contractor's Proposed Solution: ☐ **Sketch/Information Attached**

Impact on Cost:	**Impact on Schedule:**

Trades/Specialty Contractors Affected:
Trades/Specialty Contractors Coordinated With:

Submitted By:	**Requested Date of Response:**

Architect/Engineer's Response: ☐ **ID No._____** ☐ **Attached** ☐ **Sketch/Information Attached** **By:_____** **Date:_____**

Document2

SECTION 013200 - CONSTRUCTION PROGRESS DOCUMENTATION

PART 1 - GENERAL

1.1 SUMMARY

A. Section includes administrative and procedural requirements for documenting the progress of construction during performance of the Work, including the following:

1. Startup construction schedule.
2. Contractor's Construction Schedule.
3. Construction schedule updating reports.

B. Related Requirements:

1. Section 011200 "Multiple Contract Summary" for preparing a combined Contractor's Construction Schedule.
2. Section 012900 "Payment Procedures" for schedule of values and requirements for use of cost-loaded schedule for Applications for Payment.
3. Section 014000 "Quality Requirements" for schedule of tests and inspections.

1.2 DEFINITIONS

A. Activity: A discrete part of a project that can be identified for planning, scheduling, monitoring, and controlling the construction Project. Activities included in a construction schedule consume time and resources.

1. Critical Activity: An activity on the critical path that must start and finish on the planned early start and finish times.
2. Predecessor Activity: An activity that precedes another activity in the network.
3. Successor Activity: An activity that follows another activity in the network.

B. Cost Loading: The allocation of the schedule of values for completing an activity as scheduled. The sum of costs for all activities must equal the total Contract Sum.

C. CPM: Critical path method, which is a method of planning and scheduling a construction project where activities are arranged based on activity relationships. Network calculations determine the critical path of Project and when activities can be performed.

D. Critical Path: The longest connected chain of interdependent activities through the network schedule that establishes the minimum overall Project duration and contains no float.

E. Event: The starting or ending point of an activity.

F. Float: The measure of leeway in starting and completing an activity.

Copyright © 2025 by the American Institute of Architects. Warning: This AIA MasterSpec-based document is protected by U.S. Copyright Law and International Treaties. It was created by "Michael Shilale Architects, LLP" for "Renovation of Rockland Green Administrative Headquarters and Construction of an Immersive Theatre Experience". A valid, current MasterSpec license is required for editing and use of this document for any other project.(22360)

1. Float time belongs to Owner .
2. Free float is the amount of time an activity can be delayed without adversely affecting the early start of the successor activity.
3. Total float is the measure of leeway in starting or completing an activity without adversely affecting the planned Project completion date.

G. Resource Loading: The allocation of labor and equipment necessary for completing an activity as scheduled.

1.3 INFORMATIONAL SUBMITTALS

A. Format for Submittals: Submit required submittals in the following format:

1. Working electronic copy of schedule file.
2. PDF file.

B. Contractor's Construction Schedule: Initial schedule, of size required to display entire schedule for entire construction period.

1. Submit a working digital copy of schedule, using software indicated, and labeled to comply with requirements for submittals.

C. Construction Schedule Updating Reports: Submit with Applications for Payment.

1.4 QUALITY ASSURANCE

1.5 COORDINATION

A. Coordinate Contractor's Construction Schedule with the schedule of values, list of subcontracts, submittal schedule, progress reports, payment requests, and other required schedules and reports.

1. Secure time commitments for performing critical elements of the Work from entities involved.
2. Coordinate each construction activity in the network with other activities, and schedule them in proper sequence.

1.6 CONTRACTOR'S CONSTRUCTION SCHEDULE

A. Computer Scheduling Software: Prepare schedules using current version of a program that has been developed specifically to manage construction schedules.

B. Time Frame: Extend schedule from date established for commencement of the Work to date of .

1. Contract completion date to not be changed by submission of a schedule that shows an early completion date, unless specifically authorized by Change Order.

Copyright © 2025 by the American Institute of Architects. Warning: This AIA MasterSpec-based document is protected by U.S. Copyright Law and International Treaties. It was created by "Michael Shilale Architects, LLP" for "Renovation of Rockland Green Administrative Headquarters and Construction of an Immersive Theatre Experience". A valid, current MasterSpec license is required for editing and use of this document for any other project.(22360)

C. Activities: Treat each floor or separate area as a separate numbered activity for each main element of the Work. Comply with the following:

1. Activity Duration: Define activities so no activity is longer than 20 days, unless specifically allowed by Architect.
2. Temporary Facilities: Indicate start and completion dates for the following as applicable:
   a. Securing of approvals and permits required for performance of the Work.
   b. Temporary facilities.
   c. Construction of mock-ups, prototypes and samples.
   d. Owner interfaces and furnishing of items.
   e. Interfaces with Separate Contracts.
   f. Regulatory agency approvals.
   g. Punch list.
3. Procurement Activities: Include procurement process activities for the following long lead-time items and major items, requiring a cycle of more than 60 days, as separate activities in schedule. Procurement cycle activities include, but are not limited to, submittals, approvals, purchasing, fabrication, and delivery.
4. Submittal Review Time: Include review and resubmittal times indicated in Section 013300 "Submittal Procedures" in schedule. Coordinate submittal review times in Contractor's Construction Schedule with submittal schedule.
5. Startup and Testing Time: Include no fewer than 15 days for startup and testing.
6. Commissioning Time: Include no fewer than 15 days for commissioning.
7. Substantial Completion: Indicate completion in advance of date established for Substantial Completion, and allow time for Architect's administrative procedures necessary for certification of Substantial Completion.
8. Punch List and Final Completion: Include not more than 30 days for completion of punch list items and Final Completion.

D. Constraints: Include constraints and work restrictions indicated in the Contract Documents and as follows in schedule, and show how the sequence of the Work is affected.

1. Phasing: Arrange list of activities on schedule by phase.
2. Work under More Than One Contract: Include a separate activity for each contract.
3. Products Ordered in Advance: Include a separate activity for each product. Include delivery date indicated in Section 011000 "Summary." Delivery dates indicated stipulate the earliest possible delivery date.
4. Work Restrictions: Show the effect of the following items on the schedule:
   a. Coordination with existing construction.
   b. Limitations of continued occupancies.
   c. Uninterruptible services.
   d. Partial occupancy before Substantial Completion.
   e. Use-of-premises restrictions.
   f. Provisions for future construction.
   g. Seasonal variations.
   h. Environmental control.
5. Work Stages: Indicate important stages of construction for each major portion of the Work, including, but not limited to, the following:
   a. Subcontract awards.
   b. Submittals.
   c. Purchases.

Copyright © 2025 by the American Institute of Architects. Warning: This AIA MasterSpec-based document is protected by U.S. Copyright Law and International Treaties. It was created by "Michael Shilale Architects, LLP" for "Renovation of Rockland Green Administrative Headquarters and Construction of an Immersive Theatre Experience". A valid, current MasterSpec license is required for editing and use of this document for any other project.(22360)

d. Mockups.
e. Fabrication.
f. Sample testing.
g. Deliveries.
h. Installation.
i. Tests and inspections.
j. Adjusting.
k. Curing.
l. Building flush-out.
m. Startup and placement into final use and operation.
n. Commissioning.

6. Construction Areas: Identify each major area of construction for each major portion of the Work. Indicate where each construction activity within a major area must be sequenced or integrated with other construction activities to provide for the following:
   a. Structural completion.
   b. Temporary enclosure and space conditioning.
   c. Permanent space enclosure.
   d. Completion of mechanical installation.
   e. Completion of electrical installation.
   f. Substantial Completion.

E. Milestones: Include milestones indicated in the Contract Documents in schedule, including, but not limited to, the Notice to Proceed, Substantial Completion, and Final Completion .

1. Temporary enclosure and space conditioning.

F. Upcoming Work Summary: Prepare summary report indicating activities scheduled to occur or commence prior to submittal of next schedule update. Summarize the following issues:

1. Unresolved issues.
2. Unanswered Requests for Information.
3. Rejected or unreturned submittals.
4. Notations on returned submittals.
5. Pending modifications affecting the Work and the Contract Time.

G. Contractor's Construction Schedule Updating: At monthly intervals, update schedule to reflect actual construction progress and activities. Issue schedule one week before each regularly scheduled progress meeting.

1. Revise schedule immediately after each meeting or other activity where revisions have been recognized or made. Issue updated schedule concurrently with the report of each such meeting.
2. Include a report with updated schedule that indicates every change, including, but not limited to, changes in logic, durations, actual starts and finishes, and activity durations.
3. As the Work progresses, indicate Final Completion percentage for each activity.

H. Recovery Schedule: When periodic update indicates the Work is 14 or more calendar days behind the current approved schedule, submit a separate recovery schedule indicating means by which Contractor intends to regain compliance with the schedule. Indicate changes to working

Copyright © 2025 by the American Institute of Architects. Warning: This AIA MasterSpec-based document is protected by U.S. Copyright Law and International Treaties. It was created by "Michael Shilale Architects, LLP" for "Renovation of Rockland Green Administrative Headquarters and Construction of an Immersive Theatre Experience". A valid, current MasterSpec license is required for editing and use of this document for any other project.(22360)

hours, working days, crew sizes, equipment required to achieve compliance, and date by which recovery will be accomplished.

I. Distribution: Distribute copies of approved schedule to Architect Owner, separate contractors, testing and inspecting agencies, and other parties identified by Contractor with a need-to-know schedule responsibility.

1. Post copies in Project meeting rooms and temporary field offices.
2. When revisions are made, distribute updated schedules to the same parties and post in the same locations. Delete parties from distribution when they have completed their assigned portion of the Work and are no longer involved in performance of construction activities.

1.7 STARTUP CONSTRUCTION SCHEDULE

A. Gantt-Chart Schedule: Submit startup, horizontal, Gantt-chart-type construction schedule within seven days of date established for commencement of the Work .

B. Preparation: Indicate each significant construction activity separately. Identify first workday of each week with a continuous vertical line. Outline significant construction activities for first 90 days of construction. Include skeleton diagram for the remainder of the Work and a cash requirement prediction based on indicated activities.

PART 2 - PRODUCTS (Not Used)

PART 3 - EXECUTION (Not Used)

END OF SECTION 013200

Copyright © 2025 by the American Institute of Architects. Warning: This AIA MasterSpec-based document is protected by U.S. Copyright Law and International Treaties. It was created by "Michael Shilale Architects, LLP" for "Renovation of Rockland Green Administrative Headquarters and Construction of an Immersive Theatre Experience". A valid, current MasterSpec license is required for editing and use of this document for any other project.(22360)

SECTION 013300 - SUBMITTAL PROCEDURES

PART 1 - GENERAL

1.1 RELATED DOCUMENTS

A. Drawings and general provisions of the Contract, including General and Supplementary Conditions and other Division 01 Specification Sections, apply to this Section.

1.2 SUMMARY

A. Section Includes:

1. Submittal schedule requirements.
2. Administrative and procedural requirements for submittals.

B. Related Requirements:

1. Section 012900 "Payment Procedures" for submitting Applications for Payment and the schedule of values.
2. Section 013100 "Project Management and Coordination" for submitting coordination drawings and subcontract list and for requirements for web-based Project software.
3. Section 013200 "Construction Progress Documentation" for submitting schedules and reports, including Contractor's construction schedule.
4. Section 014000 "Quality Requirements" for submitting test and inspection reports, and schedule of tests and inspections.
5. Section 017700 "Closeout Procedures" for submitting closeout submittals and maintenance material submittals.
6. Section 017823 "Operation and Maintenance Data" for submitting operation and maintenance manuals.
7. Section 017839 "Project Record Documents" for submitting record Drawings, record Specifications, and record Product Data.
8. Section 017900 "Demonstration and Training" for submitting video recordings of demonstration of equipment and training of Owner's personnel.

1.3 DEFINITIONS

A. Action Submittals: Written and graphic information and physical samples that require Architect's responsive action. Action submittals are those submittals indicated in individual Specification Sections as "action submittals."

B. Informational Submittals: Written and graphic information and physical samples that do not require Architect's responsive action. Submittals may be rejected for not complying with requirements. Informational submittals are those submittals indicated in individual Specification Sections as "informational submittals."

Copyright © 2025 by the American Institute of Architects. Warning: This AIA MasterSpec-based document is protected by U.S. Copyright Law and International Treaties. It was created by "Michael Shilale Architects, LLP" for "Renovation of Rockland Green Administrative Headquarters and Construction of an Immersive Theatre Experience". A valid, current MasterSpec license is required for editing and use of this document for any other project.(22360)

1.4 SUBMITTAL SCHEDULE

A. Submittal Schedule: Submit, as an action submittal, a list of submittals, arranged in chronological order by dates required by construction schedule. Include time required for review, ordering, manufacturing, fabrication, and delivery when establishing dates. Include additional time required for making corrections or revisions to submittals noted by Architect and additional time for handling and reviewing submittals required by those corrections.

1. Coordinate submittal schedule with list of subcontracts, the schedule of values, and Contractor's construction schedule.
2. Initial Submittal Schedule: Submit concurrently with startup construction schedule. Include submittals required during the first 60 days of construction. List those submittals required to maintain orderly progress of the Work and those required early because of long lead time for manufacture or fabrication.
3. Final Submittal Schedule: Submit concurrently with the first complete submittal of Contractor's construction schedule.
   a. Submit revised submittal schedule as required to reflect changes in current status and timing for submittals.
4. Format: Arrange the following information in a tabular format:
   a. Scheduled date for first submittal.
   b. Specification Section number and title.
   c. Submittal Category: Action; informational.
   d. Name of subcontractor.
   e. Description of the Work covered.
   f. Scheduled date for Architect's final release or approval.

1.5 SUBMITTAL FORMATS

A. Submittal Information: Include the following information in each submittal:

1. Project name.
2. Date.
3. Name of Architect.
4. Name of Contractor.
5. Name of firm or entity that prepared submittal.
6. Names of subcontractor, manufacturer, and supplier.
7. Unique submittal number, including revision identifier. Include Specification Section number with sequential alphanumeric identifier and alphanumeric suffix for resubmittals.
8. Category and type of submittal.
9. Submittal purpose and description.
10. Number and title of Specification Section, with paragraph number and generic name for each of multiple items.
11. Drawing number and detail references, as appropriate.
12. Indication of full or partial submittal.
13. Location(s) where product is to be installed, as appropriate.
14. Other necessary identification.
15. Remarks.
16. Signature of transmitter.

Copyright © 2025 by the American Institute of Architects. Warning: This AIA MasterSpec-based document is protected by U.S. Copyright Law and International Treaties. It was created by "Michael Shilale Architects, LLP" for "Renovation of Rockland Green Administrative Headquarters and Construction of an Immersive Theatre Experience". A valid, current MasterSpec license is required for editing and use of this document for any other project.(22360)

B. Options: Identify options requiring selection by Architect.

C. Deviations and Additional Information: On each submittal, clearly indicate deviations from requirements in the Contract Documents, including minor variations and limitations; include relevant additional information and revisions, other than those requested by Architect on previous submittals. Indicate by highlighting on each submittal or noting on attached separate sheet.

D. Electronic Submittals: Prepare submittals as PDF package, incorporating complete information into each PDF file. Name PDF file with submittal number.

1.6 SUBMITTAL PROCEDURES

A. Prepare and submit submittals required by individual Specification Sections. Types of submittals are indicated in individual Specification Sections.

1. Email: Prepare submittals as PDF package and transmit to Architect by sending via email. Include PDF transmittal form. Include information in email subject line as requested by Architect.
   a. Architect will return annotated file. Annotate and retain one copy of file as a digital Project Record Document file.

B. Coordination: Coordinate preparation and processing of submittals with performance of construction activities.

1. Coordinate each submittal with fabrication, purchasing, testing, delivery, other submittals, and related activities that require sequential activity.
2. Submit all submittal items required for each Specification Section concurrently unless partial submittals for portions of the Work are indicated on approved submittal schedule.
3. Submit action submittals and informational submittals required by the same Specification Section as separate packages under separate transmittals.
4. Coordinate transmittal of submittals for related parts of the Work specified in different Sections, so processing will not be delayed because of need to review submittals concurrently for coordination.
   a. the right to withhold action on a submittal requiring coordination with other submittals until related submittals are received.

C. Processing Time: Allow time for submittal review, including time for resubmittals, as follows. Time for review shall commence on Architect's receipt of submittal. No extension of the Contract Time will be authorized because of failure to transmit submittals enough in advance of the Work to permit processing, including resubmittals.

1. Initial Review: Allow 10 days for initial review of each submittal. Allow additional time if coordination with subsequent submittals is required. will advise Contractor when a submittal being processed must be delayed for coordination.
2. Intermediate Review: If intermediate submittal is necessary, process it in same manner as initial submittal.
3. Resubmittal Review: Allow 10 days for review of each resubmittal.

Copyright © 2025 by the American Institute of Architects. Warning: This AIA MasterSpec-based document is protected by U.S. Copyright Law and International Treaties. It was created by "Michael Shilale Architects, LLP" for "Renovation of Rockland Green Administrative Headquarters and Construction of an Immersive Theatre Experience". A valid, current MasterSpec license is required for editing and use of this document for any other project.(22360)

4. Concurrent Consultant Review: Where the Contract Documents indicate that submittals may be transmitted simultaneously to Architect and to Architect's consultants, allow 15 days for review of each submittal. Submittal will be returned to before being returned to Contractor.
    a. Submit one copy of submittal to concurrent reviewer in addition to specified number of copies to Architect.

D. Resubmittals: Make resubmittals in same form and number of copies as initial submittal.

1. Note date and content of previous submittal.
2. Note date and content of revision in label or title block, and clearly indicate extent of revision.
3. Resubmit submittals until they are marked with approval notation from Architect's action stamp.

E. Distribution: Furnish copies of final submittals to manufacturers, subcontractors, suppliers, fabricators, installers, authorities having jurisdiction, and others as necessary for performance of construction activities. Show distribution on transmittal forms.

F. Use for Construction: Retain complete copies of submittals on Project site. Use only final action submittals that are marked with approval notation from Architect's action stamp.

1.7 SUBMITTAL REQUIREMENTS

A. Product Data: Collect information into a single submittal for each element of construction and type of product or equipment.

1. If information must be specially prepared for submittal because standard published data are unsuitable for use, submit as Shop Drawings, not as Product Data.
2. Mark each copy of each submittal to show which products and options are applicable.
3. Include the following information, as applicable:
    a. Manufacturer's catalog cuts.
    b. Manufacturer's product specifications.
    c. Standard color charts.
    d. Statement of compliance with specified referenced standards.
    e. Testing by recognized testing agency.
    f. Application of testing agency labels and seals.
    g. Notation of coordination requirements.
    h. Availability and delivery time information.
4. For equipment, include the following in addition to the above, as applicable:
    a. Wiring diagrams that show factory-installed wiring.
    b. Printed performance curves.
    c. Operational range diagrams.
    d. Clearances required to other construction, if not indicated on accompanying Shop Drawings.
5. Submit Product Data before Shop Drawings, and before or concurrently with Samples.

B. Shop Drawings: Prepare Project-specific information, drawn accurately to scale. Do not base Shop Drawings on reproductions of the Contract Documents or standard printed data.

Copyright © 2025 by the American Institute of Architects. Warning: This AIA MasterSpec-based document is protected by U.S. Copyright Law and International Treaties. It was created by "Michael Shilale Architects, LLP" for "Renovation of Rockland Green Administrative Headquarters and Construction of an Immersive Theatre Experience". A valid, current MasterSpec license is required for editing and use of this document for any other project.(22360)

1. Preparation: Fully illustrate requirements in the Contract Documents. Include the following information, as applicable:
   a. Identification of products.
   b. Schedules.
   c. Compliance with specified standards.
   d. Notation of coordination requirements.
   e. Notation of dimensions established by field measurement.
   f. Relationship and attachment to adjoining construction clearly indicated.
   g. Seal and signature of professional engineer if specified.

C. Samples: Submit Samples for review of type, color, pattern, and texture for a check of these characteristics with other materials.

1. Transmit Samples that contain multiple, related components, such as accessories together in one submittal package.
2. Identification: Permanently attach label on unexposed side of Samples that includes the following:
   a. Project name and submittal number.
   b. Generic description of Sample.
   c. Product name and name of manufacturer.
   d. Sample source.
   e. Number and title of applicable Specification Section.
   f. Specification paragraph number and generic name of each item.
3. Email Transmittal: Provide PDF transmittal. Include digital image file illustrating Sample characteristics and identification information for record.
4. Web-Based Project Management Software: Prepare submittals in PDF form, and upload to web-based Project software website. Enter required data in web-based software site to fully identify submittal.
5. Disposition: Maintain sets of approved Samples at Project site, available for quality-control comparisons throughout the course of construction activity. Sample sets may be used to determine final acceptance of construction associated with each set.
   a. Samples not incorporated into the Work, or otherwise designated as Owner's property, are the property of Contractor.
6. Samples for Initial Selection: Submit manufacturer's color charts consisting of units or sections of units, showing the full range of colors, textures, and patterns available.
   a. Number of Samples: Submit one full set(s) of available choices where color, pattern, texture, or similar characteristics are required to be selected from manufacturer's product line. Architect will return submittal with options selected.
7. Samples for Verification: Submit full-size units or Samples of size indicated, prepared from same material to be used for the Work, cured and finished in manner specified, and physically identical with material or product proposed for use, and that show full range of color and texture variations expected. Samples include, but are not limited to, the following: partial sections of manufactured or fabricated components; small cuts or containers of materials; complete units of repetitively used materials; swatches showing color, texture, and pattern; color range sets; and components used for independent testing and inspection.
   a. Number of Samples: Submit 2 sets of Samples. Architect will retain 1 Sample sets; remainder will be returned.

Copyright © 2025 by the American Institute of Architects. Warning: This AIA MasterSpec-based document is protected by U.S. Copyright Law and International Treaties. It was created by "Michael Shilale Architects, LLP" for "Renovation of Rockland Green Administrative Headquarters and Construction of an Immersive Theatre Experience". A valid, current MasterSpec license is required for editing and use of this document for any other project.(22360)

1) Submit a single Sample where assembly details, workmanship, fabrication techniques, connections, operation, and other similar characteristics are to be demonstrated.
2) If variation in color, pattern, texture, or other characteristic is inherent in material or product represented by a Sample, submit at least three sets of paired units that show approximate limits of variations.

D. Product Schedule: As required in individual Specification Sections, prepare a written summary indicating types of products required for the Work and their intended location. Include the following information in tabular form:

1. Type of product. Include unique identifier for each product indicated in the Contract Documents or assigned by Contractor if none is indicated.
2. Manufacturer and product name, and model number if applicable.
3. Number and name of room or space.
4. Location within room or space.

E. Qualification Data: Prepare written information that demonstrates capabilities and experience of firm or person. Include lists of completed projects with project names and addresses, contact information of architects and owners, and other information specified.

F. Design Data: Prepare and submit written and graphic information indicating compliance with indicated performance and design criteria in individual Specification Sections. Include list of assumptions and summary of loads. Include load diagrams if applicable. Provide name and version of software, if any, used for calculations. Number each page of submittal.

G. Certificates:

1. Certificates and Certifications Submittals: Submit a statement that includes signature of entity responsible for preparing certification. Certificates and certifications shall be signed by an officer or other individual authorized to sign documents on behalf of that entity. Provide a notarized signature where indicated.
2. Installer Certificates: Submit written statements on manufacturer's letterhead, certifying that Installer complies with requirements in the Contract Documents and, where required, is authorized by manufacturer for this specific Project.
3. Manufacturer Certificates: Submit written statements on manufacturer's letterhead, certifying that manufacturer complies with requirements in the Contract Documents. Include evidence of manufacturing experience where required.
4. Material Certificates: Submit written statements on manufacturer's letterhead, certifying that material complies with requirements in the Contract Documents.
5. Product Certificates: Submit written statements on manufacturer's letterhead, certifying that product complies with requirements in the Contract Documents.
6. Welding Certificates: Prepare written certification that welding procedures and personnel comply with requirements in the Contract Documents. Submit record of AWS B2.1/B2.1M on AWS forms. Include names of firms and personnel certified.

H. Test and Research Reports:

1. Compatibility Test Reports: Submit reports written by a qualified testing agency, on testing agency's standard form, indicating and interpreting results of compatibility tests

Copyright © 2025 by the American Institute of Architects. Warning: This AIA MasterSpec-based document is protected by U.S. Copyright Law and International Treaties. It was created by "Michael Shilale Architects, LLP" for "Renovation of Rockland Green Administrative Headquarters and Construction of an Immersive Theatre Experience". A valid, current MasterSpec license is required for editing and use of this document for any other project.(22360)

performed before installation of product. Include written recommendations for substrate preparation and primers required.

2. Field Test Reports: Submit written reports indicating and interpreting results of field tests performed either during installation of product or after product is installed in its final location, for compliance with requirements in the Contract Documents.
3. Material Test Reports: Submit reports written by a qualified testing agency, on testing agency's standard form, indicating and interpreting test results of material for compliance with requirements in the Contract Documents.
4. Preconstruction Test Reports: Submit reports written by a qualified testing agency, on testing agency's standard form, indicating and interpreting results of tests performed before installation of product, for compliance with performance requirements in the Contract Documents.
5. Product Test Reports: Submit written reports indicating that current product produced by manufacturer complies with requirements in the Contract Documents. Base reports on evaluation of tests performed by manufacturer and witnessed by a qualified testing agency, or on comprehensive tests performed by a qualified testing agency.

1.8 DELEGATED-DESIGN SERVICES

A. Performance and Design Criteria: Where professional design services or certifications by a design professional are specifically required of Contractor by the Contract Documents, provide products and systems complying with specific performance and design criteria indicated.

1. If criteria indicated are insufficient to perform services or certification required, submit a written request for additional information to Architect.

B. Delegated-Design Services Certification: In addition to Shop Drawings, Product Data, and other required submittals, submit digitally signed PDF file and 1 paper copies of certificate, signed and sealed by the responsible design professional, for each product and system specifically assigned to Contractor to be designed or certified by a design professional.

1. Indicate that products and systems comply with performance and design criteria in the Contract Documents. Include list of codes, loads, and other factors used in performing these services.

1.9 CONTRACTOR'S REVIEW

A. Action Submittals and Informational Submittals: Review each submittal and check for coordination with other Work of the Contract and for compliance with the Contract Documents. Note corrections and field dimensions. Mark with approval stamp before submitting to Architect and Construction Manager.

B. Contractor's Approval: Indicate Contractor's approval for each submittal with a uniform approval stamp . Include name of reviewer, date of Contractor's approval, and statement certifying that submittal has been reviewed, checked, and approved for compliance with the Contract Documents.

Copyright © 2025 by the American Institute of Architects. Warning: This AIA MasterSpec-based document is protected by U.S. Copyright Law and International Treaties. It was created by "Michael Shilale Architects, LLP" for "Renovation of Rockland Green Administrative Headquarters and Construction of an Immersive Theatre Experience". A valid, current MasterSpec license is required for editing and use of this document for any other project.(22360)

1. Architect and Construction Manager will not review submittals received from Contractor that do not have Contractor's review and approval.

1.10 ARCHITECT'S REVIEW

A. Action Submittals: Architect will review each submittal, indicate corrections or revisions required.

1. PDF Submittals: Architect will indicate, via markup on each submittal, the appropriate action .
2. Paper Submittals: Architect will stamp each submittal with an action stamp and will mark stamp appropriately to indicate action .

B. Informational Submittals: Architect will review each submittal and will not return it, or will return it if it does not comply with requirements. Architect will forward each submittal to appropriate party.

C. Partial submittals prepared for a portion of the Work will be reviewed when use of partial submittals has received prior approval from Architect.

D. Incomplete submittals are unacceptable, will be considered nonresponsive, and will be returned for resubmittal without review.

E. Architect will discard submittals received from sources other than Contractor.

F. Submittals not required by the Contract Documents will be returned by Architect without action.

PART 2 - PRODUCTS (Not Used)

PART 3 - EXECUTION (Not Used)

END OF SECTION 013300

Copyright © 2025 by the American Institute of Architects. Warning: This AIA MasterSpec-based document is protected by U.S. Copyright Law and International Treaties. It was created by "Michael Shilale Architects, LLP" for "Renovation of Rockland Green Administrative Headquarters and Construction of an Immersive Theatre Experience". A valid, current MasterSpec license is required for editing and use of this document for any other project.(22360)

SECTION 014000 - QUALITY REQUIREMENTS

PART 1 - GENERAL

1.1 SUMMARY

A. Section includes administrative and procedural requirements for quality assurance and quality control.

B. Testing and inspection services are required to verify compliance with requirements specified or indicated. These services do not relieve Contractor of responsibility for compliance with the Contract Document requirements.

1. Specific quality-assurance and quality-control requirements for individual work results are specified in their respective Specification Sections. Requirements in individual Sections may also cover production of standard products.
2. Specified tests, inspections, and related actions do not limit Contractor's other quality-assurance and quality-control procedures that facilitate compliance with the Contract Document requirements.
3. Requirements for Contractor to provide quality-assurance and quality-control services required by Architect, Owner, or authorities having jurisdiction are not limited by provisions of this Section.

C. Related Requirements:

1. Section 012100 "Allowances" for testing and inspection allowances.

1.2 DEFINITIONS

A. Experienced: When used with an entity or individual, "experienced," unless otherwise further described, means having successfully completed a minimum of five previous projects similar in nature, size, and extent to this Project; being familiar with special requirements indicated; and having complied with requirements of authorities having jurisdiction.

B. Field Quality-Control Tests and Inspections: Tests and inspections that are performed on-site for installation of the Work and for completed Work.

C. Installer/Applicator/Erector: Contractor or another entity engaged by Contractor as an employee, subcontractor, or sub-subcontractor, to perform a particular construction operation, including installation, erection, application, assembly, and similar operations.

1. Use of trade-specific terminology in referring to a Work result does not require that certain construction activities specified apply exclusively to specific trade(s).

D. Mockups: Physical assemblies of portions of the Work constructed to establish the standard by which the Work will be judged. Mockups are not Samples.

Copyright © 2025 by the American Institute of Architects. Warning: This AIA MasterSpec-based document is protected by U.S. Copyright Law and International Treaties. It was created by "Michael Shilale Architects, LLP" for "Renovation of Rockland Green Administrative Headquarters and Construction of an Immersive Theatre Experience". A valid, current MasterSpec license is required for editing and use of this document for any other project.(22360)

1. Mockups are used for one or more of the following:
   a. Verify selections made under Sample submittals.
   b. Demonstrate aesthetic effects.
   c. Demonstrate the qualities of products and workmanship.
   d. Demonstrate successful installation of interfaces between components and systems.
   e. Perform preconstruction testing to determine system performance.
2. Product Mockups: Mockups that may include multiple products, materials, or systems specified in a single Section.
3. In-Place Mockups: Mockups constructed on-site in their actual final location as part of permanent construction.

E. Preconstruction Testing: Tests and inspections performed specifically for Project before products and materials are incorporated into the Work, to verify performance or compliance with specified criteria. Unless otherwise indicated, copies of reports of tests or inspections performed for other than the Project do not meet this definition.

F. Product Tests: Tests and inspections that are performed by a nationally recognized testing laboratory (NRTL) in accordance with 29 CFR 1910.7, by a testing agency accredited in accordance with NIST's National Voluntary Laboratory Accreditation Program (NVLAP), or by a testing agency qualified to conduct product testing and acceptable to authorities having jurisdiction, to establish product performance and compliance with specified requirements.

G. Source Quality-Control Tests and Inspections: Tests and inspections that are performed at the source (e.g., plant, mill, factory, or shop).

H. Testing Agency: An entity engaged to perform specific tests, inspections, or both. The term "testing laboratory" has the same meaning as the term "testing agency."

I. Quality-Assurance Services: Activities, actions, and procedures performed before and during execution of the Work, to guard against defects and deficiencies and substantiate that proposed construction will comply with requirements.

J. Quality-Control Services: Tests, inspections, procedures, and related actions during and after execution of the Work, to evaluate that actual products incorporated into the Work and completed construction comply with requirements. Contractor's quality-control services do not include contract administration activities performed by Architect.

1.3 DELEGATED DESIGN SERVICES

A. Performance and Design Criteria: Where professional design services or certifications by a design professional are specifically required of Contractor by the Contract Documents, provide products and systems complying with specific performance and design criteria indicated.

1. If criteria indicated are not sufficient to perform services or certification required, submit a written request for additional information to Architect.

B. Delegated Design Services Statement: Submit a statement signed and sealed by the responsible design professional, for each product and system specifically assigned to Contractor to be

Copyright © 2025 by the American Institute of Architects. Warning: This AIA MasterSpec-based document is protected by U.S. Copyright Law and International Treaties. It was created by "Michael Shilale Architects, LLP" for "Renovation of Rockland Green Administrative Headquarters and Construction of an Immersive Theatre Experience". A valid, current MasterSpec license is required for editing and use of this document for any other project.(22360)

designed or certified by a design professional, indicating that the products and systems are in compliance with performance and design criteria indicated. Include list of codes, loads, and other factors used in performing these services.

1.4 CONFLICTING REQUIREMENTS

A. Conflicting Standards and Other Requirements: If compliance with two or more standards or requirements is specified and the standards or requirements establish different or conflicting requirements for minimum quantities or quality levels, inform the Architect regarding the conflict and obtain clarification prior to proceeding with the Work. Refer conflicting requirements that are different, but apparently equal, to Architect for clarification before proceeding.

B. Minimum Quantity or Quality Levels: The quantity or quality level shown or specified is the minimum provided or performed. The actual installation may comply exactly with the minimum quantity or quality specified, or it may exceed the minimum within reasonable limits. To comply with these requirements, indicated numeric values are minimum or maximum, as appropriate, for the context of requirements. Refer uncertainties to Architect for a decision before proceeding.

1.5 ACTION SUBMITTALS

A. Mockup Shop Drawings:

1. Include plans, sections, elevations, and details, indicating materials and size of mockup construction.
2. Indicate manufacturer and model number of individual components.
3. Provide axonometric drawings for conditions difficult to illustrate in two dimensions.

1.6 INFORMATIONAL SUBMITTALS

A. Contractor's Quality-Control Plan: For quality-assurance and quality-control activities and responsibilities.

B. Contractor's Statement of Responsibility: When required by authorities having jurisdiction, submit copy of written statement of responsibility submitted to authorities having jurisdiction before starting work on the following systems:

1. Seismic-force-resisting system, designated seismic system, or component listed in the Statement of Special Inspections.
2. Primary wind-force-resisting system or a wind-resisting component listed in the Statement of Special Inspections.

C. Schedule of Tests and Inspections: Prepare in tabular form and include the following:

1. Specification Section number and title.
2. Entity responsible for performing tests and inspections.

Copyright © 2025 by the American Institute of Architects. Warning: This AIA MasterSpec-based document is protected by U.S. Copyright Law and International Treaties. It was created by "Michael Shilale Architects, LLP" for "Renovation of Rockland Green Administrative Headquarters and Construction of an Immersive Theatre Experience". A valid, current MasterSpec license is required for editing and use of this document for any other project.(22360)

3. Description of test and inspection.
4. Identification of applicable standards.
5. Identification of test and inspection methods.
6. Number of tests and inspections required.
7. Time schedule or time span for tests and inspections.
8. Requirements for obtaining samples.
9. Unique characteristics of each quality-control service.

D. Permits, Licenses, and Certificates: For Owner's record, submit copies of permits, licenses, certifications, inspection reports, releases, jurisdictional settlements, notices, receipts for fee payments, judgments, correspondence, records, and similar documents established for compliance with standards and regulations bearing on performance of the Work.

1.7 CONTRACTOR'S QUALITY-CONTROL PLAN

A. Quality-Control Plan, General: Submit quality-control plan within 10 days of Notice of Award , and not less than five days prior to preconstruction conference. Submit in format acceptable to Architect. Identify personnel, procedures, controls, instructions, tests, records, and forms to be used to carry out Contractor's quality-assurance and quality-control responsibilities and to coordinate Owner's quality-assurance and quality-control activities. Coordinate with Contractor's Construction Schedule.

B. Quality-Control Personnel Qualifications: Engage qualified personnel trained and experienced in managing and executing quality-assurance and quality-control procedures similar in nature and extent to those required for Project.

1. Project quality-control manager may also serve as Project superintendent .

C. Submittal Procedure: Describe procedures for ensuring compliance with requirements through review and management of submittal process. Indicate qualifications of personnel responsible for submittal review.

D. Testing and Inspection: In quality-control plan, include a comprehensive schedule of Work requiring testing or inspection, including the following:

1. Contractor-performed tests and inspections, including subcontractor-performed tests and inspections. Include required tests and inspections and Contractor-elected tests and inspections. Distinguish source quality-control tests and inspections from field quality-control tests and inspections.
2. Special inspections required by authorities having jurisdiction and indicated on the Statement of Special Inspections.
3. Owner-performed tests and inspections indicated in the Contract Documents , including tests and inspections indicated to be performed by Commissioning Authority.

E. Continuous Inspection of Workmanship: Describe process for continuous inspection during construction to identify and correct deficiencies in workmanship in addition to testing and inspection specified. Indicate types of corrective actions to be required to bring the Work into compliance with standards of workmanship established by Contract requirements and approved mockups.

Copyright © 2025 by the American Institute of Architects. Warning: This AIA MasterSpec-based document is protected by U.S. Copyright Law and International Treaties. It was created by "Michael Shilale Architects, LLP" for "Renovation of Rockland Green Administrative Headquarters and Construction of an Immersive Theatre Experience". A valid, current MasterSpec license is required for editing and use of this document for any other project.(22360)

F. Monitoring and Documentation: Maintain testing and inspection reports, including log of approved and rejected results. Include Work Architect has indicated as nonconforming or defective. Indicate corrective actions taken to bring nonconforming Work into compliance with requirements. Comply with requirements of authorities having jurisdiction.

1.8 REPORTS AND DOCUMENTS

A. Test and Inspection Reports: Prepare and submit certified written reports specified in other Sections. Include the following:

1. Date of issue.
2. Project title and number.
3. Name, address, telephone number, and email address of testing agency.
4. Dates and locations of samples and tests or inspections.
5. Names of individuals making tests and inspections.
6. Description of the Work and test and inspection method.
7. Identification of product and Specification Section.
8. Complete test or inspection data.
9. Test and inspection results and an interpretation of test results.
10. Record of temperature and weather conditions at time of sample-taking and testing and inspection.
11. Comments or professional opinion on whether tested or inspected Work complies with the Contract Document requirements.
12. Name and signature of laboratory inspector.
13. Recommendations on retesting and reinspecting.

B. Manufacturer's Technical Representative's Field Reports: Prepare written information documenting manufacturer's technical representative's tests and inspections specified in other Sections. Include the following:

1. Name, address, telephone number, and email address of technical representative making report.
2. Statement on condition of substrates and their acceptability for installation of product.
3. Statement that products at Project site comply with requirements.
4. Summary of installation procedures being followed, whether they comply with requirements and, if not, what corrective action was taken.
5. Results of operational and other tests and a statement of whether observed performance complies with requirements.
6. Statement of whether conditions, products, and installation will affect warranty.
7. Other required items indicated in individual Specification Sections.

C. Factory-Authorized Service Representative's Reports: Prepare written information documenting manufacturer's factory-authorized service representative's tests and inspections specified in other Sections. Include the following:

1. Name, address, telephone number, and email address of factory-authorized service representative making report.
2. Statement that equipment complies with requirements.

Copyright © 2025 by the American Institute of Architects. Warning: This AIA MasterSpec-based document is protected by U.S. Copyright Law and International Treaties. It was created by "Michael Shilale Architects, LLP" for "Renovation of Rockland Green Administrative Headquarters and Construction of an Immersive Theatre Experience". A valid, current MasterSpec license is required for editing and use of this document for any other project.(22360)

3. Results of operational and other tests and a statement of whether observed performance complies with requirements.
4. Statement of whether conditions, products, and installation will affect warranty.
5. Other required items indicated in individual Specification Sections.

1.9 QUALITY ASSURANCE

A. Qualifications paragraphs in this article establish the minimum qualification levels required; individual Specification Sections specify additional requirements.

B. Manufacturer Qualifications: A firm experienced in manufacturing products or systems similar to those indicated for this Project and with a record of successful in-service performance, as well as sufficient production capacity to produce required units. As applicable, procure products from manufacturers able to meet qualification requirements, warranty requirements, and technical or factory-authorized service representative requirements.

C. Fabricator Qualifications: A firm experienced in producing products similar to those indicated for this Project and with a record of successful in-service performance, as well as sufficient production capacity to produce required units.

D. Installer Qualifications: A firm or individual experienced in installing, erecting, applying, or assembling work similar in material, design, and extent to that indicated for this Project, whose work has resulted in construction with a record of successful in-service performance.

E. Professional Engineer Qualifications: A professional engineer who is legally qualified to practice in jurisdiction where Project is located and who is experienced in providing engineering services of the kind indicated. Engineering services are defined as those performed for installations of the system, assembly, or product that is similar in material, design, and extent to those indicated for this Project.

F. Specialists: Certain Specification Sections require that specific construction activities be performed by entities who are recognized experts in those operations. Specialists will satisfy qualification requirements indicated and engage in the activities indicated.

1. Requirements of authorities having jurisdiction supersede requirements for specialists.

G. Testing and Inspecting Agency Qualifications: An NRTL, an NVLAP, or an independent agency with the experience and capability to conduct testing and inspection indicated, as documented in accordance with ASTM E329, and with additional qualifications specified in individual Sections; and, where required by authorities having jurisdiction, that is acceptable to authorities.

H. Preconstruction Testing: Where testing agency is indicated to perform preconstruction testing for compliance with specified requirements for performance and test methods, comply with the following:

1. Contractor's Responsibilities:
   a. Provide test specimens representative of proposed products and construction.

Copyright © 2025 by the American Institute of Architects. Warning: This AIA MasterSpec-based document is protected by U.S. Copyright Law and International Treaties. It was created by "Michael Shilale Architects, LLP" for "Renovation of Rockland Green Administrative Headquarters and Construction of an Immersive Theatre Experience". A valid, current MasterSpec license is required for editing and use of this document for any other project.(22360)

b. Submit specimens in a timely manner with sufficient time for testing and analyzing results to prevent delaying the Work.
c. Provide sizes and configurations of test assemblies, mockups, and laboratory mockups to adequately demonstrate capability of products to comply with performance requirements.
d. Build site-assembled test assemblies and mockups, using installers who will perform same tasks for Project.
e. When testing is complete, remove test specimens and test assemblies , and mockups; do not reuse products on Project.

2. Testing Agency Responsibilities: Submit a certified written report of each test, inspection, and similar quality-assurance service to Architect and Commissioning Authority , with copy to Contractor. Interpret tests and inspections, and state in each report whether tested and inspected Work complies with or deviates from the Contract Documents.

I. Mockups: Before installing portions of the Work requiring mockups, build mockups for each form of construction and finish required to comply with the following requirements, using materials indicated for the completed Work:

1. Build mockups of size indicated.
2. Build mockups in location indicated or, if not indicated, as directed by Architect.
3. Notify Architect seven days in advance of dates and times when mockups will be constructed.
4. Employ supervisory personnel who will oversee mockup construction. Employ workers who will be employed to perform same tasks during the construction at Project.
5. Demonstrate the proposed range of aesthetic effects and workmanship.
6. Obtain Architect's approval of mockups before starting corresponding Work, fabrication, or construction.
   a. Allow seven days for initial review and each re-review of each mockup.
7. Promptly correct unsatisfactory conditions noted by Architect's preliminary review, to the satisfaction of the Architect, before completion of final mockup.
8. Approval of mockups by the Architect does not constitute approval of deviations from the Contract Documents contained in mockups unless Architect specifically approves such deviations in writing.
9. Maintain mockups during construction in an undisturbed condition as a standard for judging the completed Work.
10. Demolish and remove mockups when directed unless otherwise indicated.

J. Specialty Mockups: See Section 014339 "Mockups" for additional construction requirements for .

1.10 QUALITY CONTROL

A. Owner Responsibilities: Where quality-control services are indicated as Owner's responsibility, Owner will engage a qualified testing agency to perform these services.

1. Owner will furnish Contractor with names, addresses, and telephone numbers of testing agencies engaged and a description of types of testing and inspection they are engaged to perform.

Copyright © 2025 by the American Institute of Architects. Warning: This AIA MasterSpec-based document is protected by U.S. Copyright Law and International Treaties. It was created by "Michael Shilale Architects, LLP" for "Renovation of Rockland Green Administrative Headquarters and Construction of an Immersive Theatre Experience". A valid, current MasterSpec license is required for editing and use of this document for any other project.(22360)

2. Payment for these services will be made from testing and inspection allowances specified in Section 012100 "Allowances," as authorized by Change Orders.
3. Costs for retesting and reinspecting construction that replaces or is necessitated by Work that failed to comply with the Contract Documents will be charged to Contractor , and the Contract Sum will be adjusted by Change Order.

B. Contractor Responsibilities: Tests and inspections not explicitly assigned to Owner are Contractor's responsibility. Perform additional quality-control activities, whether specified or not, to verify and document that the Work complies with requirements.

1. Unless otherwise indicated, provide quality-control services specified and those required by authorities having jurisdiction. Perform quality-control services required of Contractor by authorities having jurisdiction, whether specified or not.
2. Engage a qualified testing agency to perform quality-control services.
   a. Contractor will not employ same entity engaged by Owner, unless agreed to in writing by Owner.
3. Notify testing agencies at least 24 hours in advance of time when Work that requires testing or inspection will be performed.
4. Where quality-control services are indicated as Contractor's responsibility, submit a certified written report, in duplicate, of each quality-control service.
5. Testing and inspection requested by Contractor and not required by the Contract Documents are Contractor's responsibility.
6. Submit additional copies of each written report directly to authorities having jurisdiction, when they so direct.

C. Retesting/Reinspecting: Regardless of whether original tests or inspections were Contractor's responsibility, provide quality-control services, including retesting and reinspecting, for construction that replaced Work that failed to comply with the Contract Documents.

D. Testing Agency Responsibilities: Cooperate with Architect and Contractor in performance of duties. Provide qualified personnel to perform required tests and inspections.

1. Notify Architect and Contractor promptly of irregularities or deficiencies observed in the Work during performance of its services.
2. Determine the locations from which test samples will be taken and in which in-situ tests are conducted.
3. Conduct and interpret tests and inspections, and state in each report whether tested and inspected Work complies with or deviates from requirements.
4. Submit a certified written report, in duplicate, of each test, inspection, and similar quality-control service through Contractor.
5. Do not release, revoke, alter, or increase the Contract Document requirements or approve or accept any portion of the Work.
6. Do not perform duties of Contractor.

E. Manufacturer's Field Services: Where indicated, engage a factory-authorized service representative to inspect field-assembled components and equipment installation, including service connections. Report results in writing as specified in Section 013300 "Submittal Procedures."

Copyright © 2025 by the American Institute of Architects. Warning: This AIA MasterSpec-based document is protected by U.S. Copyright Law and International Treaties. It was created by "Michael Shilale Architects, LLP" for "Renovation of Rockland Green Administrative Headquarters and Construction of an Immersive Theatre Experience". A valid, current MasterSpec license is required for editing and use of this document for any other project.(22360)

F. Manufacturer's Technical Services: Where indicated, engage a manufacturer's technical representative to observe and inspect the Work. Manufacturer's technical representative's services include participation in preinstallation conferences, examination of substrates and conditions, verification of materials, observation of Installer activities, inspection of completed portions of the Work, and submittal of written reports.

G. Contractor's Associated Requirements and Services: Cooperate with agencies and representatives performing required tests, inspections, and similar quality-control services, and provide reasonable auxiliary services as requested. Notify agency sufficiently in advance of operations to permit assignment of personnel. Provide the following:

1. Access to the Work.
2. Incidental labor and facilities necessary to facilitate tests and inspections.
3. Adequate quantities of representative samples of materials that require testing and inspection. Assist agency in obtaining samples.
4. Facilities for storage and field curing of test samples.
5. Delivery of samples to testing agencies.
6. Preliminary design mix proposed for use for material mixes that require control by testing agency.
7. Security and protection for samples and for testing and inspection equipment at Project site.

H. Coordination: Coordinate sequence of activities to accommodate required quality-assurance and quality-control services with a minimum of delay and to avoid necessity of removing and replacing construction to accommodate testing and inspection.

1. Schedule times for tests, inspections, obtaining samples, and similar activities.

I. Schedule of Tests and Inspections: Prepare a schedule of tests, inspections, and similar quality-control services required by the Contract Documents as a component of Contractor's quality-control plan. Coordinate and submit concurrently with Contractor's Construction Schedule. Update and submit with each Application for Payment.

1. Schedule Contents: Include tests, inspections, and quality-control services, including Contractor- and Owner-retained services, commissioning activities, and other Project-required services paid for by other entities.
2. Distribution: Distribute schedule to Owner, Architect, testing agencies, and each party involved in performance of portions of the Work where tests and inspections are required.

1.11 SPECIAL TESTS AND INSPECTIONS

A. Special Tests and Inspections: Owner will engage a qualified testing agency to conduct special tests and inspections required by authorities having jurisdiction as the responsibility of Owner , as indicated in the Statement of Special Inspections attached to this Section, and as follows:

1. Verifying that manufacturer maintains detailed fabrication and quality-control procedures, and reviewing the completeness and adequacy of those procedures to perform the Work.

Copyright © 2025 by the American Institute of Architects. Warning: This AIA MasterSpec-based document is protected by U.S. Copyright Law and International Treaties. It was created by "Michael Shilale Architects, LLP" for "Renovation of Rockland Green Administrative Headquarters and Construction of an Immersive Theatre Experience". A valid, current MasterSpec license is required for editing and use of this document for any other project.(22360)

2. Notifying Architect and Contractor promptly of irregularities and deficiencies observed in the Work during performance of its services.
3. Submitting a certified written report of each test, inspection, and similar quality-control service to Architect with copy to Contractor and to authorities having jurisdiction.
4. Submitting a final report of special tests and inspections at Substantial Completion, which includes a list of unresolved deficiencies.
5. Interpreting tests and inspections, and stating in each report whether tested and inspected Work complies with or deviates from the Contract Documents.
6. Retesting and reinspecting corrected Work.

PART 2 - PRODUCTS (Not Used)

PART 3 - EXECUTION

3.1 TEST AND INSPECTION LOG

A. Test and Inspection Log: Prepare a record of tests and inspections. Include the following:

1. Date test or inspection was conducted.
2. Description of the Work tested or inspected.
3. Date test or inspection results were transmitted to Architect.
4. Identification of testing agency or special inspector conducting test or inspection.

B. Maintain log at Project site. Post changes and revisions as they occur. Provide access to test and inspection log for Architect's , Commissioning Authority's, and authorities' having jurisdiction reference during normal working hours.

1. Submit log at Project closeout as part of Project Record Documents.

3.2 REPAIR AND PROTECTION

A. General: On completion of testing, inspection, sample-taking, and similar services, repair damaged construction and restore substrates and finishes.

1. Provide materials and comply with installation requirements specified in other Specification Sections or matching existing substrates and finishes. Restore patched areas and extend restoration into adjoining areas with durable seams that are as invisible as possible. Comply with the Contract Document requirements for cutting and patching in Section 017300 "Execution."

B. Protect construction exposed by or for quality-control service activities.

C. Repair and protection are Contractor's responsibility, regardless of the assignment of responsibility for quality-control services.

Copyright © 2025 by the American Institute of Architects. Warning: This AIA MasterSpec-based document is protected by U.S. Copyright Law and International Treaties. It was created by "Michael Shilale Architects, LLP" for "Renovation of Rockland Green Administrative Headquarters and Construction of an Immersive Theatre Experience". A valid, current MasterSpec license is required for editing and use of this document for any other project.(22360)

END OF SECTION 014000

Copyright © 2025 by the American Institute of Architects. Warning: This AIA MasterSpec-based document is protected by U.S. Copyright Law and International Treaties. It was created by "Michael Shilale Architects, LLP" for "Renovation of Rockland Green Administrative Headquarters and Construction of an Immersive Theatre Experience". A valid, current MasterSpec license is required for editing and use of this document for any other project.(22360)

NYS EDUCATION DEPARTMENT **Office of Facilities Planning** **89 Washington Avenue, Room 1060 EBA** **Albany, NY 12234**	**STATEMENT OF SPECIAL INSPECTIONS AND TESTS** As required by the Building Code of NYS (2020 BCNYS) *Note: The code listings below are not to be considered all inclusive.*

BCNYS § 1704.2.3 requires the NYS Licensed Design Professional (of record) to complete the Statement of Special Inspections and Tests. Completion of the Statement of Special Inspections & Tests, **and;** Submission to the Office of Facilities Planning with the Construction Permit Application is a condition for issuance of the Building Permit.

School District N/A	Project Tiltle Rockland Green Alterations
Building Rockland Green	
SED Project # N/A	Project Address 172 Main Street Nanuet, NY 10954
Architect/Engineer: Michael Shilale Architects, LLP	
Sign and Stamp:	

A/E Firm (or Dba):	Phone	Date

Comments:

INSPECTION AND TESTING **Continuous & Periodic is as Defined by the BCNYS-CHAPTER 17** **All reports to be submitted to the owners representative for use, approval and record.**	**CONTINUOUS**	**PERIODIC**	**REFERENCE STANDARD**	**BCNYS REFERENCE**	**CHECK IF REQUIRED**	**IDENTIFY SPEC SECTION AND PROVIDE CLARIFYING NOTES IF NECESSARY**
A. Steel Construction				**Ch. 22**		
1. Material verification of high-strength bolts, nuts and washers.		x	AISC 360	1705.2 2204	☑	
2. Inspection of high-strength bolting.		x	AISC 360 ACI 318	1705.2 2204.2	☑	
3. Material verification of **Structural Steel**. **Open Web Steel Joist and Girders.** Basic protection of steel members, **Seismic Resistance**		x	AISC 360 ASTM A6, A514, A29 SJ100, 200 AICS 341	1705.2 2203, 2205 1705.2 2207	☑ ☐ ☐	
4. Spray Applied Fire Resistant Materials & Specialized Finishes			ASTM E605, E736	1705.14 1705.15	☐	
5. **Cold Formed Steel Construction**- load bearing. **Seismic Resistance**			AISI S100, S220, S240 ANSI/SDI -NC1.0, RD1.0, SDI-C, ASCE 7, 8 AISI S400	1704.2.5 2210 2211	☑ ☐	
6. Material verification of weld filler materials.			AWS D1.1, D1.3	1705.2 2204.1	☑	
7. Inspection of welding:		x	ACI 318: 26.6.4	T 1705.3 2204	☑	
a. Structural steel		x	AWS D1.1, D1.3	1705.2	☑	
b. Reinforcing steel			AWS D1.1, D1.3	1705.3.1	☐	
c. Cold Formed Steel Deck			AISC S100, ASCE 7, 8	1705.2.2	☑	
8. Inspection of steel frame joint details.				1705.2	☐	

INSPECTION AND TESTING **Continuous & Periodic is as Defined by the BCNYS-CHAPTER 17** **All reports to be submitted to the owners representative for use, approval and record.**	**CONTINUOUS**	**PERIODIC**	**REFERENCE STANDARD**	**BCNYS REFERENCE**	**CHECK IF REQUIRED**	**IDENTIFY SPEC SECTION AND PROVIDE CLARIFYING NOTES IF NECESSARY**
B. Concrete Construction				**Ch. 19**		
1. Inspection of reinforcing steel, including prestressing tendons, and verify placement.			Ch. 21, 22 ACI 318; Ch 20, 25.2, 25.3, 26.6.1, 26.6.3 AISC 360	T 1705.3 1901 1905	☑	
2. Inspection of reinforcing steel bar welding.			ACI 318, AWS D1.4	T 1705.3	☐	
3. Inspection of anchors to be installed in concrete prior to and during placement.			ACI 318: 17.8.2, 17.8.2.4	T 1705.3	☐	
4. Verify use of required design mix.		x	ACI 318: Ch. 19, 26.4.3, 26.4.4	T 1705.3 1904 1908	☑	
5. Sampling fresh concrete: slump, air content, temperature, strength test specimens.			ASTM C172, C31 ACI 318: 26.5, 26.9, 26.10, 26.11	T 1705.3 1901 1905 1908	☑	
6. Inspection of placement for proper application techniques.			ACI 318: 26.5	T 1705.3	☑	
7. Inspection for maintenance of specified curing temperature and techniques.			ACI 318: 26.5	T 1705.3 1908 1909	☑	
8. Inspection of prestressed concrete.			ACI 318: 26.10	T 1705.3	☐	
9. Erection of precast concrete members.			ACI 318: 26.9	T 1705.3	☐	
10. Verification of in-situ concrete strength prior to stressing of tendons and prior to removal of shores and forms from beams and slabs.			ACI 318: 26.11.2	T 1705.3	☐	
11 Inspection of formwork			ACI 318: 26.11.1.2 (b)	T 1705.3	☐	

C.	Masonry Construction						Ch. 21		
	INSPECTION AND TESTING **Continuous & Periodic is as Defined by the BCNYS-CHAPTER 17** **All reports to be submitted to the owners representative for use, approval and record.**	**CONTINUOUS**	**PERIODIC**	**REFERENCE STANDARD**		**BCNYS REFERENCE**	**CHECK IF REQUIRED**	**IDENTIFY SPEC SECTION AND PROVIDE CLARIFYING NOTES IF NECESSARY**
	L1 = Level 1 Inspection required for nonessential facilities. **L2 =** Level 2 Inspection required for essential facilities. * In general, schools are not considered essential facilities unless they are a designated emergency shelter.			ASTM E119 UL 263 ASTM C1364 ASTM C1670 ASTM A706 ASCE 7, 8	TMS 402, 403, 404, 504, 602	1705.4 2101 1604		
1.	Verify to ensure compliance:							
	a. Proportions of site prepared mortar and grout.					1705.4 2103.2	☑	
	b. Placement of masonry units and construction of mortar joints.					1705.4 T 1705.3	☑	
	c. Location and placement of reinforcement, connectors, tendons, anchorages.					1705.45 2103.4 T 1705.3	☐	
	d. Prestressing technique.					1705.4	☐	
	Grout space prior to grouting.					1705.4	☐	
	e. Grade and size of prestressing tendons and anchorages.					1705.4	☐	
	Placement of grout.					1705.4	☐	
	f. Grout specs prior to grouting.					1705.4	☐	
2.	Inspection program shall verify:							
	a. Size and location of structural elements.					1704.5 1705.4	☑	
	b. Type, size, and location of anchors.					1705.4 T 1705.3	☑	
	c. Specified size, grade, and type of reinforcement.					1704.5	☑	
	d. Welding of reinforcing bars.					1704.5	☐	
	e. Cold/hot weather protection of masonry construction.					1704.5, 2104.3, 2104.4	☑	
	f. Prestressing force measurement and application.					1704.5	☐	
3.	Verification accessory placement prior to grouting:					1704.5, 2105.2.2, 2105.3	☐	
4.	Grout placement.					1704.5	☑	
5.	Preparation of grout specimens, mortar specimens, and/or prisms.					1704.5, 2105.2.2, 2105.3	☐	
6.	Compliance with documents and submittals.					1704.5	☑	

INSPECTION AND TESTING **Continuous & Periodic is as Defined by the BCNYS-CHAPTER 17** **All reports to be submitted to the owners representative for use, approval and record.**	**CONTINUOUS**	**PERIODIC**	**REFERENCE STANDARD**	**BCNYS REFERENCE**	**CHECK IF REQUIRED**	**IDENTIFY SPEC SECTION AND PROVIDE CLARIFYING NOTES IF NECESSARY**
D. Wood Construction				**Ch. 23**		
1. Fabrication process of prefabricated **Wood Structural Elements** and assemblies.			Ch. 16 AWC, APA, CPA, DOC PS1, PS2	1704.6, 1705.5 2302, 2303 2304	☐	
2. High-load diaphrams **Seismic Resistance**				1704, 1705, 1704.6 2304, 2305 2306, 2307, 2308	☐	
E. Soils				**Ch. 18**		
1. Geotechnical Investigations, Excavations, Grading, Fill Damp-proofing/ Water-Proofing			ASTM, NYS DOT OSHA Appendix J- BCNYS	1704, 1706 1803, 1804, 1805	☐	
2. **Flood & Stormwater Hazards** [per BCNYS 106]			Local Highway Authority Flood Plain Admin. Appendix G- BCNYS	1703 1610, 1611, 1612 1805.1.2.1	☐ ☐	
F. Specialized Foundations- Piers, Piles				**Ch. 16**		
1. Deep Foundation Elements: Driven Piles Cast in Place Helical Piles				T 1705.7 T 1705.8 1705.7 1705.8 1705.9	☐	
G. Exterior Wall Coverings				**Ch. 14**		
1. Exterior Insulation and Finish Systems (EIFS) MCM, HPL, Other Combustible Materials			ASTM E2568, E2273, E2570 E2393, E84 Ch. 16 NFPA 268, 275, 285, 286	1405, 1406, 1407, 1408 1704.2, 1705.12.5 1705.16	☑	
H. Misc.						
1. Access Floors and Storage Racks Other Architectural, MEP Components **Seismic Resitance**				1705.12	☐	
2. In-Situ Testing				1604.6, 1708	☐	
3. Pre-Construction Load Testing				1604.7, 1709	☐	
4. Fire Resistant Penitrations & Joints Fire Stops Testing for Smoke Control			Ch. 7 ASTM E119 UL 263	1705.17 1705.18	☑	
5. **Pre-Submission:** **Inventory of all Fire-Resistant-Rated Construction- Level 2 Alterations and greater** [per BCNYS 106]	X		verification required EBCNYS Ch. 3 C. of E. 155 Regulations.	**FCNYS 701.6** **BCNYS 703.7** **19CRR-NY XXXII**	☐	
6. **Pre-Submission:** **Hazardous Material Survey** **Water Quality Survey**	X X		verification required ACM Letter- Certificate C. of E. 155 Regulations.	US-EPA NYS-DOH	☐	
7. Other:					☐	

INSPECTION AND TESTING (Continuous & Periodic is as Defined by the BCNYS)	CONTINUOUS	PERIODIC	REFERENCE STANDARD	BCNYS REFERENCE	CHECK IF REQUIRED	IDENTIFY SPEC SECTION AND PROVIDE CLARIFYING NOTES IF NECESSARY
T. A/E INSPECTIONS						
1 Foundation Inspections						
a. Footings					☑	
b. Foundation Walls					☐	
c. Slabs On grade					☑	
2 Structural Elements Inspections						
a. Super Structure					☑	
b. Interior Partition					☑	
3 Electrical Inspections						
a. Rough-In					☑	
b. Final					☑	
4 HVAC System Inspections						
a. Fuel burning heating appliances					☑	
b. Chimneys, flues and gas vents					☐	
c. Unit Ventilation/ Ventilation Systems/Air Conditioning Systems					☑	
5 Plumbing Systems Inspections						
a. Below-Grade Plumbing					☑	
b. Rough Plumbing					☑	
c. Finish Plumbing					☑	
6 Fire Protection & Detection Inspections						
a. Sprinkler System						
(i.) Rough-In					☐	
(ii.) Final					☑	
b. Alarm System						
(i.) Rough-In					☑	
(ii.) Final					☑	
7 Exiting Features Inspection						
a. Rough-In					☑	
b. Final					☑	
8 Energy Code Compliance					☑	
9 Elevator Inspection			ASME A17.1		☐	
10 Final Inspection					☑	

SECTION 014200 - REFERENCES

PART 1 - GENERAL

1.1 DEFINITIONS

A. General: Basic Contract definitions are included in the Conditions of the Contract.

B. "Approved": When used to convey Architect's action on Contractor's submittals, applications, and requests, "approved" is limited to Architect's duties and responsibilities as stated in the Conditions of the Contract.

C. "Directed": A command or instruction by Architect. Other terms, including "requested," "authorized," "selected," "required," and "permitted," have the same meaning as "directed."

D. "Indicated": Requirements expressed by graphic representations or in written form on Drawings, in Specifications, and in other Contract Documents. Other terms, including "shown," "noted," "scheduled," and "specified," have the same meaning as "indicated."

E. "Regulations": Laws, ordinances, statutes, and lawful orders issued by authorities having jurisdiction, and rules, conventions, and agreements within the construction industry that control performance of the Work.

F. "Furnish": Supply and deliver to Project site, ready for unloading, unpacking, assembly, installation, and similar operations.

G. "Install": Unload, temporarily store, unpack, assemble, erect, place, anchor, apply, work to dimension, finish, cure, protect, clean, and similar operations at Project site.

H. "Provide": Furnish and install, complete and ready for the intended use.

I. "Project Site": Space available for performing construction activities. The extent of Project site is shown on Drawings and may or may not be identical with the description of the land on which Project is to be built.

1.2 INDUSTRY STANDARDS

A. Applicability of Standards: Unless the Contract Documents include more stringent requirements, applicable construction industry standards have the same force and effect as if bound or copied directly into the Contract Documents to the extent referenced. Such standards are made a part of the Contract Documents by reference.

B. Publication Dates: Comply with standards in effect as of date of the Contract Documents unless otherwise indicated.

Copyright © 2025 by the American Institute of Architects. Warning: This AIA MasterSpec-based document is protected by U.S. Copyright Law and International Treaties. It was created by "Michael Shilale Architects, LLP" for "Renovation of Rockland Green Administrative Headquarters and Construction of an Immersive Theatre Experience". A valid, current MasterSpec license is required for editing and use of this document for any other project.(22360)

1. For standards referenced by applicable building codes, comply with dates of standards as listed in building codes.

C. Copies of Standards: Each entity engaged in construction on Project should be familiar with industry standards applicable to its construction activity. Copies of applicable standards are not bound with the Contract Documents.

1. Where copies of standards are needed to perform a required construction activity, obtain copies directly from publication source.

1.3 ABBREVIATIONS AND ACRONYMS

A. Industry Organizations: Where abbreviations and acronyms are used in Specifications or other Contract Documents, they are to mean the recognized name of the entities indicated in Gale's "Encyclopedia of Associations: National Organizations of the U.S." or in Columbia Books' "National Trade & Professional Associations of the United States."

B. Code Agencies: Where abbreviations and acronyms are used in Specifications or other Contract Documents, they are to mean the recognized name of the entities in the following list. This information is believed to be accurate as of the date of the Contract Documents.

C. Federal Government Agencies: Where abbreviations and acronyms are used in Specifications or other Contract Documents, they are to mean the recognized name of the entities in the following list. Information is subject to change and is up to date as of the date of the Contract Documents.

D. Standards and Regulations: Where abbreviations and acronyms are used in Specifications or other Contract Documents, they are to mean the recognized name of the standards and regulations in the following list. This information is subject to change and is believed to be accurate as of the date of the Contract Documents.

E. State Government Agencies: Where abbreviations and acronyms are used in Specifications or other Contract Documents, they are to mean the recognized name of the entities in the following list. This information is subject to change and is believed to be accurate as of the date of the Contract Documents.

PART 2 - PRODUCTS (Not Used)

PART 3 - EXECUTION (Not Used)

END OF SECTION 014200

Copyright © 2025 by the American Institute of Architects. Warning: This AIA MasterSpec-based document is protected by U.S. Copyright Law and International Treaties. It was created by "Michael Shilale Architects, LLP" for "Renovation of Rockland Green Administrative Headquarters and Construction of an Immersive Theatre Experience". A valid, current MasterSpec license is required for editing and use of this document for any other project.(22360)

SECTION 015000 - TEMPORARY FACILITIES AND CONTROLS

PART 1 - GENERAL

1.1 SUMMARY

A. Section includes requirements for temporary utilities, support facilities, and security and protection facilities.

B. Related Requirements:

1. Section 011000 "Summary" for work restrictions and limitations on utility interruptions.
2. Section 012100 "Allowances" for allowance for metered use of temporary utilities.

1.2 USE CHARGES

A. Sewer Service: Owner will pay sewer-service use charges for sewer usage by all entities for construction operations.

B. Water Service: Owner will pay water-service use charges for water used by all entities for construction operations.

C. Electric Power Service: Owner will pay electric-power-service use charges for electricity used by all entities for construction operations.

1.3 INFORMATIONAL SUBMITTALS

A. Site Utilization Plan: Show temporary facilities, temporary utility lines and connections, staging areas, construction site entrances, vehicle circulation, and parking areas for construction personnel.

B. Implementation and Termination Schedule: Within 15 days of date established for commencement of the Work, submit schedule indicating implementation and termination dates of each temporary utility.

C. Fire-Safety Program: Show compliance with requirements of NFPA 241 and authorities having jurisdiction. Indicate Contractor personnel responsible for management of fire-prevention program.

D. Moisture- and Mold-Protection Plan: Describe procedures and controls for protecting materials and construction from water absorption and damage and mold. Describe delivery, handling, storage, installation, and protection provisions for materials subject to water absorption or water damage.

Copyright © 2025 by the American Institute of Architects. Warning: This AIA MasterSpec-based document is protected by U.S. Copyright Law and International Treaties. It was created by "Michael Shilale Architects, LLP" for "Renovation of Rockland Green Administrative Headquarters and Construction of an Immersive Theatre Experience". A valid, current MasterSpec license is required for editing and use of this document for any other project.(22360)

1. Indicate procedures for discarding water-damaged materials, protocols for mitigating water intrusion into completed Work, and requirements for replacing water-damaged Work.
2. Indicate sequencing of work that requires water, such as sprayed fire-resistive materials, plastering, and terrazzo grinding, and describe plans for dealing with water from these operations. Show procedures for verifying that wet construction has dried sufficiently to permit installation of finish materials.
3. Indicate methods to be used to avoid trapping water in finished work.

E. Dust- and HVAC-Control Plan: Submit coordination drawing and narrative that indicates the dust- and HVAC-control measures proposed for use, proposed locations, and proposed time frame for their operation. Include the following:

1. Locations of dust-control partitions at each phase of work.
2. HVAC system isolation schematic drawing.
3. Location of proposed air-filtration system discharge.
4. Waste-handling procedures.
5. Other dust-control measures.

F. Noise and Vibration Control Plan: Identify construction activities that may impact the occupancy and use of existing spaces within the building or adjacent existing buildings, whether occupied by others, or occupied by Owner. Include the following:

1. Methods used to meet the goals and requirements of Owner.
2. Concrete cutting method(s) to be used.
3. Location of construction devices on the site.
4. Show compliance with the use and maintenance of quieted construction devices for the duration of the Project.
5. Indicate activities that may disturb building occupants and that are planned to be performed during non-standard working hours as coordinated with Owner.

1.4 PROJECT CONDITIONS

A. Temporary Use of Permanent Facilities: Engage Installer of each permanent service to assume responsibility for operation, maintenance, and protection of each permanent service during its use as a construction facility before Owner's acceptance, regardless of previously assigned responsibilities.

PART 2 - PRODUCTS

2.1 MATERIALS

A. Dust-Control Adhesive-Surface Walk-Off Mats: Provide mats, minimum 36 by 60 inches.

B. Insulation: Unfaced mineral-fiber blanket, manufactured from glass, slag wool, or rock wool; with maximum flame-spread and smoke-developed indexes of 25 and 50, respectively.

Copyright © 2025 by the American Institute of Architects. Warning: This AIA MasterSpec-based document is protected by U.S. Copyright Law and International Treaties. It was created by "Michael Shilale Architects, LLP" for "Renovation of Rockland Green Administrative Headquarters and Construction of an Immersive Theatre Experience". A valid, current MasterSpec license is required for editing and use of this document for any other project.(22360)

2.2 TEMPORARY FACILITIES

A. Field Offices:

1. Owner will provide conditioned interior space for field offices for duration of Project .

B. Storage and Fabrication Sheds: Provide sheds sized, furnished, and equipped to accommodate materials and equipment for construction operations.

1. Store combustible materials apart from building.

2.3 EQUIPMENT

A. Fire Extinguishers: Portable, UL rated; with class and extinguishing agent as required by locations and classes of fire exposures.

B. HVAC Equipment: Unless Owner authorizes use of permanent HVAC system, provide vented, self-contained, liquid-propane-gas or fuel-oil heaters with individual space thermostatic control.

1. Heating, Cooling, and Dehumidifying Units: Listed and labeled for type of fuel being consumed, by a qualified testing agency acceptable to authorities having jurisdiction, and marked for intended location and application.
2. Permanent HVAC System: If Owner authorizes use of permanent HVAC system for temporary use during construction, provide filter with MERV of 13 at each return-air grille in system and remove at end of construction and clean HVAC system as required in Section 017700 "Closeout Procedures."

PART 3 - EXECUTION

3.1 TEMPORARY FACILITIES, GENERAL

A. Conservation: Coordinate construction and use of temporary facilities with consideration given to conservation of energy, water, and materials. Coordinate use of temporary utilities to minimize waste.

1. Salvage materials and equipment involved in performance of, but not actually incorporated into, the Work. See other Sections for disposition of salvaged materials that are designated as Owner's property.

3.2 INSTALLATION, GENERAL

A. Locate facilities where they will serve Project adequately and result in minimum interference with performance of the Work. Relocate and modify facilities as required by progress of the Work.

1. Locate facilities to limit site disturbance as specified in Section 011000 "Summary."

Copyright © 2025 by the American Institute of Architects. Warning: This AIA MasterSpec-based document is protected by U.S. Copyright Law and International Treaties. It was created by "Michael Shilale Architects, LLP" for "Renovation of Rockland Green Administrative Headquarters and Construction of an Immersive Theatre Experience". A valid, current MasterSpec license is required for editing and use of this document for any other project.(22360)

B. Provide each facility ready for use when needed to avoid delay. Do not remove until facilities are no longer needed or are replaced by authorized use of completed permanent facilities.

C. Isolation of Work Areas in Occupied Facilities: Prevent dust, fumes, and odors from entering occupied areas.

1. Prior to commencing work, isolate the HVAC system in area where work is to be performed.
   a. Disconnect supply and return ductwork in work area from HVAC systems servicing occupied areas.
   b. Maintain negative air pressure within work area, using HEPA-equipped air-filtration units, starting with commencement of temporary partition construction, and continuing until removal of temporary partitions is complete.
2. Maintain dust partitions during the Work. Use vacuum collection attachments on dust-producing equipment. Isolate limited work within occupied areas using portable dust-containment devices.
3. Perform daily construction cleanup and final cleanup using approved, HEPA-filter-equipped vacuum equipment.

3.3 SUPPORT FACILITIES INSTALLATION

A. Comply with the following:

1. Provide construction for temporary field offices, shops, and sheds located within construction area or within 30 feet of building lines that is noncombustible in accordance with ASTM E136. Comply with NFPA 241.
2. Maintain support facilities until Architect schedules Substantial Completion inspection. Remove before Substantial Completion. Personnel remaining after Substantial Completion will be permitted to use permanent facilities, under conditions acceptable to Owner.

B. Temporary Use of Planned Permanent Roads and Paved Areas: Locate temporary roads and paved areas in same location as permanent roads and paved areas. Construct and maintain temporary roads and paved areas adequate for construction operations. Extend temporary roads and paved areas, within construction limits indicated, as necessary for construction operations.

1. Coordinate elevations of temporary roads and paved areas with permanent roads and paved areas.
2. Prepare subgrade and install subbase and base for temporary roads and paved areas in accordance with Section 312000 "Earth Moving."
3. Recondition base after temporary use, including removing contaminated material, regrading, proofrolling, compacting, and testing.

C. Parking: Use designated areas of Owner's existing parking areas for construction personnel.

D. Storage and Staging: Use designated areas of Project site for storage and staging needs.

E. Waste Disposal Facilities:

Copyright © 2025 by the American Institute of Architects. Warning: This AIA MasterSpec-based document is protected by U.S. Copyright Law and International Treaties. It was created by "Michael Shilale Architects, LLP" for "Renovation of Rockland Green Administrative Headquarters and Construction of an Immersive Theatre Experience". A valid, current MasterSpec license is required for editing and use of this document for any other project.(22360)

1. Comply with requirements specified in Section 017419 "Construction Waste Management and Disposal."

F. Lifts and Hoists: Provide facilities necessary for hoisting materials and personnel.

1. Truck cranes and similar devices used for hoisting materials are considered "tools and equipment" and not temporary facilities.

G. Existing Stair Usage: Use of Owner's existing stairs will be permitted, provided stairs are cleaned and maintained in a condition acceptable to Owner. At Substantial Completion, restore stairs to condition existing before initial use.

1. Provide protective coverings, barriers, devices, signs, or other procedures to protect stairs and to maintain means of egress. If stairs become damaged, restore damaged areas, so no evidence remains of correction work.

H. Temporary Use of Permanent Stairs: Use of new stairs for construction traffic will be permitted, provided stairs are protected and finishes restored to new condition at time of Substantial Completion.

3.4 SECURITY AND PROTECTION FACILITIES INSTALLATION

A. Protection of Existing Facilities: Protect existing vegetation, equipment, structures, utilities, and other improvements at Project site and on adjacent properties, except those indicated to be removed or altered. Repair damage to existing facilities.

1. Where access to adjacent properties is required in order to affect protection of existing facilities, obtain written permission from adjacent property owner to access property for that purpose.

B. Environmental Protection: Provide protection, operate temporary facilities, and conduct construction as required to comply with environmental regulations and that minimize possible air, waterway, and subsoil contamination or pollution or other undesirable effects.

1. Comply with work restrictions specified in Section 011000 "Summary."

C. Security Enclosure and Lockup: Install temporary enclosure around partially completed areas of construction. Provide lockable entrances to prevent unauthorized entrance, vandalism, theft, and similar violations of security. Lock entrances at end of each workday.

D. Barricades, Warning Signs, and Lights: Comply with requirements of authorities having jurisdiction for erecting structurally adequate barricades, including warning signs and lighting.

E. Temporary Egress: Provide temporary egress from existing occupied facilities as indicated and as required by authorities having jurisdiction. Provide signage directing occupants to temporary egress.

Copyright © 2025 by the American Institute of Architects. Warning: This AIA MasterSpec-based document is protected by U.S. Copyright Law and International Treaties. It was created by "Michael Shilale Architects, LLP" for "Renovation of Rockland Green Administrative Headquarters and Construction of an Immersive Theatre Experience". A valid, current MasterSpec license is required for editing and use of this document for any other project.(22360)

F. Temporary Enclosures: Provide temporary enclosures for protection of construction, in progress and completed, from exposure, foul weather, other construction operations, and similar activities. Provide temporary weathertight enclosure for building exterior.

1. Where heating or cooling is needed and permanent enclosure is incomplete, insulate temporary enclosures.

G. Temporary Fire Protection: Install and maintain temporary fire-protection facilities of types needed to protect against reasonably predictable and controllable fire losses. Comply with NFPA 241; manage fire-prevention program.

1. Prohibit smoking in construction areas. Comply with additional limits on smoking specified in other Sections.
2. Supervise welding operations, combustion-type temporary heating units, and similar sources of fire ignition in accordance with requirements of authorities having jurisdiction.
3. Develop and supervise an overall fire-prevention and -protection program for personnel at Project site. Review needs with local fire department and establish procedures to be followed. Instruct personnel in methods and procedures. Post warnings and information.
4. Provide temporary standpipes and hoses for fire protection. Hang hoses with a warning sign, stating that hoses are for fire-protection purposes only and are not to be removed. Match hose size with outlet size and equip with suitable nozzles.

3.5 MOISTURE AND MOLD CONTROL

A. Moisture and Mold Protection: Protect stored materials and installed Work in accordance with Moisture and Mold Protection Plan.

B. Controlled Construction Period: After completing and sealing of the building enclosure but prior to the full operation of permanent HVAC systems, maintain as follows:

1. Control moisture and humidity inside building by maintaining effective dry-in conditions.
2. Use temporary or permanent HVAC system to control humidity within ranges specified for installed and stored materials.
3. Comply with manufacturer's written instructions for temperature, relative humidity, and exposure to water limits.
   a. Hygroscopic materials that may support mold growth, including wood and gypsum-based products, that become wet during the course of construction and remain wet for 48 hours are considered defective and require replacing.
   b. Measure moisture content of materials that have been exposed to moisture during construction operations or after installation. Record readings beginning at time of exposure and continuing daily for 48 hours. Identify materials containing moisture levels higher than allowed. Report findings in writing to Architect.
   c. Remove and replace materials that cannot be completely restored to their manufactured moisture level within 48 hours.

Copyright © 2025 by the American Institute of Architects. Warning: This AIA MasterSpec-based document is protected by U.S. Copyright Law and International Treaties. It was created by "Michael Shilale Architects, LLP" for "Renovation of Rockland Green Administrative Headquarters and Construction of an Immersive Theatre Experience". A valid, current MasterSpec license is required for editing and use of this document for any other project.(22360)

3.6 OPERATION, TERMINATION, AND REMOVAL

A. Supervision: Enforce strict discipline in use of temporary facilities. To minimize waste and abuse, limit availability of temporary facilities to essential and intended uses.

B. Maintenance: Maintain facilities in good operating condition until removal.

1. Maintain operation of temporary enclosures, heating, cooling, humidity control, ventilation, and similar facilities on a 24-hour basis where required to achieve indicated results and to avoid possibility of damage.

C. Temporary Facility Changeover: Do not change over from using temporary security and protection facilities to permanent facilities until Substantial Completion.

D. Termination and Removal: Remove each temporary facility when need for its service has ended, when it has been replaced by authorized use of a permanent facility, or no later than Substantial Completion. Complete or, if necessary, restore permanent construction that may have been delayed because of interference with temporary facility. Repair damaged Work, clean exposed surfaces, and replace construction that cannot be satisfactorily repaired.

1. Materials and facilities that constitute temporary facilities are property of Contractor. Owner reserves right to take possession of Project identification signs.
2. Remove temporary roads and paved areas not intended for or acceptable for integration into permanent construction. Where area is intended for landscape development, remove soil and aggregate fill that do not comply with requirements for fill or subsoil. Remove materials contaminated with road oil, asphalt and other petrochemical compounds, and other substances that might impair growth of plant materials or lawns. Repair or replace street paving, curbs, and sidewalks at temporary entrances, as required by authorities having jurisdiction.
3. At Substantial Completion, repair, renovate, and clean permanent facilities used during construction period. Comply with final cleaning requirements specified in Section 017700 "Closeout Procedures."

END OF SECTION 015000

Copyright © 2025 by the American Institute of Architects. Warning: This AIA MasterSpec-based document is protected by U.S. Copyright Law and International Treaties. It was created by "Michael Shilale Architects, LLP" for "Renovation of Rockland Green Administrative Headquarters and Construction of an Immersive Theatre Experience". A valid, current MasterSpec license is required for editing and use of this document for any other project.(22360)

SECTION 016000 - PRODUCT REQUIREMENTS

PART 1 - GENERAL

1.1 SUMMARY

A. The Work of This Section Includes: Administrative and procedural requirements for selection of products for use in Project; product delivery, storage, and handling; manufacturers' standard warranties on products; special warranties; and comparable products.

B. Related Requirements:

1. Section 011000 "Summary" for Contractor requirements related to Owner-furnished products.
2. Section 012100 "Allowances" for products selected under an allowance.
3. Section 012300 "Alternates" for products selected under an alternate.
4. Section 012500 "Substitution Procedures" for requests for substitutions.
5. Section 014200 "References" for applicable industry standards for products specified.
6. Section 017700 "Closeout Procedures" for submitting warranties.

1.2 DEFINITIONS

A. Products: Items obtained for incorporating into the Work, whether purchased for Project or taken from previously purchased stock. The term "product" includes the terms "material," "equipment," "system," and terms of similar intent.

1. Named Products: Items identified by manufacturer's product name, including make or model number or other designation shown or listed in manufacturer's published product literature that is current as of date of the Contract Documents.
2. New Products: Items that have not previously been incorporated into another project or facility. Salvaged items or items reused from other projects are not considered new products. Items that are manufactured or fabricated to include recycled content materials are considered new products unless otherwise indicated.
3. Comparable Product: Product by named manufacturer that is demonstrated and approved through the comparable product submittal process described in "Comparable Products" Article, to have the indicated qualities related to type, function, dimension, in-service performance, physical properties, appearance, and other characteristics that equal or exceed those of specified product.

B. Basis-of-Design Product Specification: A specification in which a single manufacturer's product is named and accompanied by the words "basis-of-design product," including make or model number or other designation. Published attributes and characteristics of basis-of-design product establish salient characteristics of products.

1. Evaluating Comparable Products: In addition to the basis-of-design product description, product attributes and characteristics may be listed to establish the significant qualities

Copyright © 2025 by the American Institute of Architects. Warning: This AIA MasterSpec-based document is protected by U.S. Copyright Law and International Treaties. It was created by "Michael Shilale Architects, LLP" for "Renovation of Rockland Green Administrative Headquarters and Construction of an Immersive Theatre Experience". A valid, current MasterSpec license is required for editing and use of this document for any other project.(22360)

related to type, function, in-service performance and physical properties, weight, dimension, durability, visual characteristics, and other special features and requirements for purposes of evaluating comparable products of additional manufacturers named in the specification. Manufacturer's published attributes and characteristics of basis-of-design product also establish salient characteristics of products for purposes of evaluating comparable products.

C. Subject to Compliance with Requirements: Where the phrase "Subject to compliance with requirements" introduces a product selection procedure in an individual Specification Section, provide products qualified under the specified product procedure. In the event that a named product or product by a named manufacturer does not meet the other requirements of the specifications, select another named product or product from another named manufacturer that does meet the requirements of the specifications; submit a comparable product request or substitution request, if applicable.

D. Basis-of-Design Product Specification Submittal: An action submittal complying with requirements in Section 013300 "Submittal Procedures."

1.3 QUALITY ASSURANCE

A. Compatibility of Options: If Contractor is given option of selecting between two or more products for use on Project, select product compatible with products previously selected, even if previously selected products were also options.

1. Resolution of Compatibility Disputes between Multiple Contractors:
   a. Contractors are responsible for providing products and construction methods compatible with products and construction methods of other contractors.
   b. If a dispute arises between the multiple contractors over concurrently selectable but incompatible products, Architect will determine which products will be used.

B. Identification of Products: Except for required labels and operating data, do not attach or imprint manufacturer or product names or trademarks on exposed surfaces of products or equipment that will be exposed to view in occupied spaces or on the exterior.

1. Labels: Locate required product labels and stamps on a concealed surface, or, where required for observation following installation, on a visually accessible surface that is inconspicuous.
2. Equipment Nameplates: Provide a permanent nameplate on each item of service- or power-operated equipment. Locate on a visually accessible but inconspicuous surface. Include information essential for operation, including the following:
   a. Name of product and manufacturer.
   b. Model and serial number.
   c. Capacity.
   d. Speed.
   e. Ratings.
3. See individual identification Sections in Divisions 21, 22, 23, and 26 for additional equipment identification requirements.

Copyright © 2025 by the American Institute of Architects. Warning: This AIA MasterSpec-based document is protected by U.S. Copyright Law and International Treaties. It was created by "Michael Shilale Architects, LLP" for "Renovation of Rockland Green Administrative Headquarters and Construction of an Immersive Theatre Experience". A valid, current MasterSpec license is required for editing and use of this document for any other project.(22360)

1.4 COORDINATION

A. Modify or adjust affected work as necessary to integrate work of approved comparable products and approved substitutions.

1.5 PRODUCT DELIVERY, STORAGE, AND HANDLING

A. Deliver, store, and handle products, using means and methods that will prevent damage, deterioration, and loss, including theft and vandalism. Comply with manufacturer's written instructions.

B. Delivery and Handling:

1. Schedule delivery to minimize long-term storage at Project site and to prevent overcrowding of construction spaces.
2. Coordinate delivery with installation time to ensure minimum holding time for items that are flammable, hazardous, easily damaged, or sensitive to deterioration, theft, and other losses.
3. Deliver products to Project site in an undamaged condition in manufacturer's original sealed container or other packaging system, complete with labels and instructions for handling, storing, unpacking, protecting, and installing.
4. Inspect products on delivery to determine compliance with the Contract Documents and that products are undamaged and properly protected.

C. Storage:

1. Provide a secure location and enclosure at Project site for storage of materials and equipment.
2. Store products to allow for inspection and measurement of quantity or counting of units.
3. Store materials in a manner that will not endanger Project structure.
4. Store products that are subject to damage by the elements under cover in a weathertight enclosure above ground, with ventilation adequate to prevent condensation and with adequate protection from wind.
5. Protect foam plastic from exposure to sunlight, except to extent necessary for period of installation and concealment.
6. Comply with product manufacturer's written instructions for temperature, humidity, ventilation, and weather-protection requirements for storage.
7. Protect stored products from damage and liquids from freezing.
8. Provide a secure location and enclosure at Project site for storage of materials and equipment by Owner's construction forces. Coordinate location with Owner.

1.6 PRODUCT WARRANTIES

A. Warranties specified in other Sections are to be in addition to, and run concurrent with, other warranties required by the Contract Documents. Manufacturer's disclaimers and limitations on product warranties do not relieve Contractor of obligations under requirements of the Contract Documents.

Copyright © 2025 by the American Institute of Architects. Warning: This AIA MasterSpec-based document is protected by U.S. Copyright Law and International Treaties. It was created by "Michael Shilale Architects, LLP" for "Renovation of Rockland Green Administrative Headquarters and Construction of an Immersive Theatre Experience". A valid, current MasterSpec license is required for editing and use of this document for any other project.(22360)

1. Manufacturer's Warranty: Written standard warranty form furnished by individual manufacturer for a particular product and issued in the name of Owner or endorsed by manufacturer to Owner.
2. Special Warranty: Written warranty required by the Contract Documents to provide specific rights for Owner and issued in the name of Owner or endorsed by manufacturer to Owner.

B. Submittal Time: Comply with requirements in Section 017700 "Closeout Procedures."

PART 2 - PRODUCTS

2.1 PRODUCT SELECTION PROCEDURES

A. General Product Requirements: Provide products that comply with the Contract Documents, are undamaged and, unless otherwise indicated, are new at time of installation.

1. Provide products complete with accessories, trim, finish, fasteners, and other items needed for a complete installation and indicated use and effect.
2. Standard Products: If available, and unless custom products or nonstandard options are specified, provide standard products of types that have been produced and used successfully in similar situations on other projects.
3. Owner reserves the right to limit selection to products with warranties meeting requirements of the Contract Documents.
4. Where products are accompanied by the term "as selected," Architect will make selection.
5. Descriptive, performance, and reference standard requirements in Specifications establish salient characteristics of products.
6. Or Equal: For products specified by name and accompanied by the term "or equal," "or approved equal," or "or approved," comply with requirements in "Comparable Products" Article to obtain approval for use of an unnamed product.
   a. Submit additional documentation required by Architect in order to establish equivalency of proposed products. Unless otherwise indicated, evaluation of "or equal" product status is by Architect, whose determination is final.

B. Product Selection Procedures:

1. Basis-of-Design Product: Where Specifications name a product, or refer to a product indicated on Drawings, and include a list of manufacturers, provide the specified or indicated product or a comparable product by one of the other named manufacturers. Drawings and Specifications may additionally indicate sizes, profiles, dimensions, and other characteristics that are based on the product named. Comply with requirements in "Comparable Products" Article for consideration of an unnamed product by one of the other named manufacturers.
   a. For approval of products by unnamed manufacturers, comply with requirements in Section 012500 "Substitution Procedures" for substitutions for convenience.

Copyright © 2025 by the American Institute of Architects. Warning: This AIA MasterSpec-based document is protected by U.S. Copyright Law and International Treaties. It was created by "Michael Shilale Architects, LLP" for "Renovation of Rockland Green Administrative Headquarters and Construction of an Immersive Theatre Experience". A valid, current MasterSpec license is required for editing and use of this document for any other project.(22360)

C. Visual Matching Specification: Where Specifications require the phrase "match Architect's sample," provide a product that complies with requirements and matches Architect's sample. Architect's decision will be final on whether a proposed product matches.

1. If no product available within specified category matches and complies with other specified requirements, comply with requirements in Section 012500 "Substitution Procedures" for proposal of product.

PART 3 - EXECUTION (Not Used)

END OF SECTION 016000

Copyright © 2025 by the American Institute of Architects. Warning: This AIA MasterSpec-based document is protected by U.S. Copyright Law and International Treaties. It was created by "Michael Shilale Architects, LLP" for "Renovation of Rockland Green Administrative Headquarters and Construction of an Immersive Theatre Experience". A valid, current MasterSpec license is required for editing and use of this document for any other project.(22360)

SECTION 017300 - EXECUTION

PART 1 - GENERAL

1.1 SUMMARY

A. Section includes general administrative and procedural requirements governing execution of the Work, including, but not limited to, the following:

1. Construction layout.
2. Field engineering.
3. Installation.
4. Cutting and patching.
5. Coordination of Owner's portion of the Work.
6. Progress cleaning.
7. Starting and adjusting.
8. Protection of installed construction.
9. Correction of the Work.

B. Related Requirements:

1. Section 011000 "Summary" for coordination of Owner-furnished products , Owner-performed work , Owner's separate contracts, and limits on use of Project site.
2. Section 013300 "Submittal Procedures" for submitting surveys.
3. Section 017700 "Closeout Procedures" for submitting final property survey with Project Record Documents, recording of Owner-accepted deviations from indicated lines and levels, replacing defective work, and final cleaning.
4. Section 024119 "Selective Demolition" for demolition and removal of selected portions of the building.
5. Section 024116 "Structure Demolition" for demolition and removal of complete building.
6. Section 078413 "Penetration Firestopping" for patching penetrations in fire-rated construction.

1.2 DEFINITIONS

A. Cutting: Removal of in-place construction necessary to permit installation or performance of subsequent work.

B. Patching: Fitting and repair work required to restore construction to original conditions after installation of subsequent work.

1.3 PREINSTALLATION MEETINGS

A. Cutting and Patching Conference: Conduct conference at Project site .

Copyright © 2025 by the American Institute of Architects. Warning: This AIA MasterSpec-based document is protected by U.S. Copyright Law and International Treaties. It was created by "Michael Shilale Architects, LLP" for "Renovation of Rockland Green Administrative Headquarters and Construction of an Immersive Theatre Experience". A valid, current MasterSpec license is required for editing and use of this document for any other project.(22360)

1. Prior to submitting cutting and patching plan , review extent of cutting and patching anticipated and examine procedures for ensuring satisfactory result from cutting and patching work. Inform Architect and Construction Manager of scheduled meeting. Require representatives of each entity directly concerned with cutting and patching to attend, including the following:
   a. Contractor's superintendent.
   b. Trade supervisor responsible for cutting operations.
   c. Trade supervisor(s) responsible for patching of each type of substrate.
   d. Mechanical, electrical, and utilities subcontractors' supervisors, to the extent each trade is affected by cutting and patching operations.
2. Review areas of potential interference and conflict. Coordinate procedures and resolve potential conflicts before proceeding.

B. Layout Conference: Conduct conference at Project site .

1. Prior to establishing layout of new perimeter and structural column grid(s), review building location requirements. Review benchmark, control point, and layout and dimension requirements. Inform Architect and Construction Manager of scheduled meeting. Require representatives of each entity directly concerned with Project layout to attend, including the following:
   a. Contractor's superintendent.
   b. Professional engineer responsible for performing Project surveying and layout.
   c. Professional engineer responsible for performing site survey serving as basis for Project design.
2. Review meanings and intent of dimensions, notes, terms, graphic symbols, and other layout information indicated on the Drawings.
3. Review requirements for including layouts on Shop Drawings and other submittals.
4. Review areas of potential interference and conflict. Coordinate procedures and resolve potential conflicts before proceeding.

1.4 INFORMATIONAL SUBMITTALS

A. Qualification Data: For professional engineer.

B. Certified Surveys: Submit two copies signed by professional engineer.

C. Cutting and Patching Plan: Submit plan describing procedures at least 10 days prior to the time cutting and patching will be performed. Include the following information:

1. Extent: Describe reason for and extent of each occurrence of cutting and patching.
2. Changes to In-Place Construction: Describe anticipated results. Include changes to structural elements and operating components as well as changes in building appearance and other significant visual elements.
3. Products: List products to be used for patching and firms or entities that will perform patching work.
4. Dates: Indicate when cutting and patching will be performed.
5. Utilities and Mechanical and Electrical Systems: List services and systems that cutting and patching procedures will disturb or affect. List services and systems that will be

Copyright © 2025 by the American Institute of Architects. Warning: This AIA MasterSpec-based document is protected by U.S. Copyright Law and International Treaties. It was created by "Michael Shilale Architects, LLP" for "Renovation of Rockland Green Administrative Headquarters and Construction of an Immersive Theatre Experience". A valid, current MasterSpec license is required for editing and use of this document for any other project.(22360)

relocated and those that will be temporarily out of service. Indicate length of time permanent services and systems will be disrupted.

a. Include description of provisions for temporary services and systems during interruption of permanent services and systems.

1.5 CLOSEOUT SUBMITTALS

A. Final Property Survey: Submit 10 copies showing the Work performed and record survey data.

1.6 QUALITY ASSURANCE

A. Land Surveyor Qualifications: A professional land surveyor who is legally qualified to practice in jurisdiction where Project is located and who is experienced in providing land-surveying services of the kind indicated.

B. Professional Engineer Qualifications: Refer to Section 014000 "Quality Requirements."

C. Cutting and Patching: Comply with requirements for and limitations on cutting and patching of construction elements.

1. Structural Elements: When cutting and patching structural elements, or when encountering the need for cutting and patching of elements whose structural function is not known, notify Architect of locations and details of cutting and await directions from Architect before proceeding. Shore, brace, and support structural elements during cutting and patching. Do not cut and patch structural elements in a manner that could change their load-carrying capacity or increase deflection.
2. Operational Elements: Do not cut and patch operating elements and related components in a manner that results in reducing their capacity to perform as intended or that results in increased maintenance or decreased operational life or safety.
   a. Primary operational systems and equipment.
   b. Fire separation assemblies.
   c. Air or smoke barriers.
   d. Fire-suppression systems.
   e. Plumbing piping systems.
   f. Mechanical systems piping and ducts.
   g. Control systems.
   h. Communication systems.
   i. Fire-detection and -alarm systems.
   j. Conveying systems.
   k. Electrical wiring systems.
   l. Operating systems of special construction.
3. Other Construction Elements: Do not cut and patch other construction elements or components in a manner that could change their load-carrying capacity, that results in reducing their capacity to perform as intended, or that results in increased maintenance or decreased operational life or safety. Other construction elements include but are not limited to the following:
   a. Water, moisture, or vapor barriers.
   b. Membranes and flashings.

Copyright © 2025 by the American Institute of Architects. Warning: This AIA MasterSpec-based document is protected by U.S. Copyright Law and International Treaties. It was created by "Michael Shilale Architects, LLP" for "Renovation of Rockland Green Administrative Headquarters and Construction of an Immersive Theatre Experience". A valid, current MasterSpec license is required for editing and use of this document for any other project.(22360)

c. Exterior curtain-wall construction.
d. Sprayed fire-resistive material.
e. Equipment supports.
f. Piping, ductwork, vessels, and equipment.
g. Noise- and vibration-control elements and systems.

4. Visual Elements: Do not cut and patch construction in a manner that results in visual evidence of cutting and patching. Do not cut and patch exposed construction in a manner that would, in Architect's opinion, reduce the building's aesthetic qualities. Remove and replace construction that has been cut and patched in a visually unsatisfactory manner.

D. Manufacturer's Installation Instructions: Obtain and maintain on-site manufacturer's written recommendations and instructions for installation of specified products and equipment.

PART 2 - PRODUCTS

2.1 MATERIALS

A. Comply with requirements specified in other Sections.

B. In-Place Materials: Use materials for patching identical to in-place materials. For exposed surfaces, use materials that visually match in-place adjacent surfaces to the fullest extent possible.

1. If identical materials are unavailable or cannot be used, use materials that, when installed, will provide a match acceptable to Architect for the visual and functional performance of in-place materials. Use materials that are not considered hazardous.

C. Cleaning Agents: Use cleaning materials and agents recommended by manufacturer or fabricator of the surface to be cleaned. Do not use cleaning agents that are potentially hazardous to health or property or that might damage finished surfaces.

PART 3 - EXECUTION

3.1 EXAMINATION

A. Existing Conditions: The existence and location of underground and other utilities and construction indicated as existing are not guaranteed. Before beginning sitework, investigate and verify the existence and location of underground utilities, mechanical and electrical systems, and other construction affecting the Work.

1. Before construction, verify the location and invert elevation at points of connection of sanitary sewer, storm sewer, gas service piping, and water-service piping; underground electrical services; and other utilities.
2. Furnish location data for work related to Project that must be performed by public utilities serving Project site.

Copyright © 2025 by the American Institute of Architects. Warning: This AIA MasterSpec-based document is protected by U.S. Copyright Law and International Treaties. It was created by "Michael Shilale Architects, LLP" for "Renovation of Rockland Green Administrative Headquarters and Construction of an Immersive Theatre Experience". A valid, current MasterSpec license is required for editing and use of this document for any other project.(22360)

B. Examination and Acceptance of Conditions: Before proceeding with each component of the Work, examine substrates, areas, and conditions, with Installer or Applicator present where indicated, for compliance with requirements for installation tolerances and other conditions affecting performance. Record observations.

1. Examine roughing-in for mechanical and electrical systems to verify actual locations of connections before equipment and fixture installation.
2. Examine walls, floors, and roofs for suitable conditions where products and systems are to be installed.
3. Verify compatibility with and suitability of substrates, including compatibility with existing finishes or primers.

C. Written Report: Where a written report listing conditions detrimental to performance of the Work is required by other Sections, include the following:

1. Description of the Work, including Specification Section number and paragraph, and Drawing sheet number and detail, where applicable.
2. List of detrimental conditions, including substrates.
3. List of unacceptable installation tolerances.
4. Recommended corrections.

D. Proceed with installation only after unsatisfactory conditions have been corrected. Proceeding with the Work indicates acceptance of surfaces and conditions.

3.2 PREPARATION

A. Existing Utility Information: Furnish information to Owner that is necessary to adjust, move, or relocate existing utility structures, utility poles, lines, services, or other utility appurtenances located in or affected by construction. Coordinate with authorities having jurisdiction.

B. Field Measurements: Take field measurements as required to fit the Work properly. Recheck measurements before installing each product. Where portions of the Work are indicated to fit to other construction, verify dimensions of other construction by field measurements before fabrication. Coordinate fabrication schedule with construction progress to avoid delaying the Work.

C. Space Requirements: Verify space requirements and dimensions of items shown diagrammatically on Drawings.

D. Review of Contract Documents and Field Conditions: Immediately on discovery of the need for clarification of the Contract Documents, submit a request for information to Architect through Construction Manager in accordance with requirements in Section 013100 "Project Management and Coordination."

Copyright © 2025 by the American Institute of Architects. Warning: This AIA MasterSpec-based document is protected by U.S. Copyright Law and International Treaties. It was created by "Michael Shilale Architects, LLP" for "Renovation of Rockland Green Administrative Headquarters and Construction of an Immersive Theatre Experience". A valid, current MasterSpec license is required for editing and use of this document for any other project.(22360)

3.3 CONSTRUCTION LAYOUT

A. Verification: Before proceeding to lay out the Work, verify layout information shown on Drawings, in relation to the property survey and existing benchmarks and existing conditions. If discrepancies are discovered, notify Architect promptly.

B. Engage a professional engineer experienced in laying out the Work, using the following accepted surveying practices:

1. Establish benchmarks and control points to set lines and levels at each story of construction and elsewhere as needed to locate each element of Project.
2. Establish limits on use of Project site.
3. Establish dimensions within tolerances indicated. Do not scale Drawings to obtain required dimensions.
4. Inform installers of lines and levels to which they must comply.
5. Check the location, level and plumb, of every major element as the Work progresses.
6. Notify Architect when deviations from required lines and levels exceed allowable tolerances.
7. Close site surveys with an error of closure equal to or less than the standard established by authorities having jurisdiction.

C. Site Improvements: Locate and lay out site improvements, including pavements, grading, fill and topsoil placement, utility slopes, and rim and invert elevations.

D. Building Lines and Levels: Locate and lay out control lines and levels for structures, building foundations, column grids, and floor levels, including those required for mechanical and electrical work. Transfer survey markings and elevations for use with control lines and levels. Level foundations and piers from two or more locations.

E. Record Log: Maintain a log of layout control work. Record deviations from required lines and levels. Include beginning and ending dates and times of surveys, weather conditions, name and duty of each survey party member, and types of instruments and tapes used. Make the log available for reference by Architect and Construction Manager.

3.4 FIELD ENGINEERING

A. Reference Points: Locate existing permanent benchmarks, control points, and similar reference points before beginning the Work. Preserve and protect permanent benchmarks and control points during construction operations.

1. Do not change or relocate existing benchmarks or control points without prior written approval of Architect or Construction Manager. Report lost or destroyed permanent benchmarks or control points promptly. Report the need to relocate permanent benchmarks or control points to Architect and Construction Manager before proceeding.
2. Replace lost or destroyed permanent benchmarks and control points promptly. Base replacements on the original survey control points.

Copyright © 2025 by the American Institute of Architects. Warning: This AIA MasterSpec-based document is protected by U.S. Copyright Law and International Treaties. It was created by "Michael Shilale Architects, LLP" for "Renovation of Rockland Green Administrative Headquarters and Construction of an Immersive Theatre Experience". A valid, current MasterSpec license is required for editing and use of this document for any other project.(22360)

B. Benchmarks: Establish and maintain a minimum of two permanent benchmarks on Project site, referenced to data established by survey control points. Comply with authorities having jurisdiction for type and size of benchmark.

1. Record benchmark locations, with horizontal and vertical data, on Project Record Documents.
2. Where the actual location or elevation of layout points cannot be marked, provide temporary reference points sufficient to locate the Work.
3. Remove temporary reference points when no longer needed. Restore marked construction to its original condition.

C. Certified Survey: On completion of foundation walls, major site improvements, and other work requiring field-engineering services, prepare a certified survey showing dimensions, locations, angles, and elevations of construction and sitework.

D. Final Property Survey: Engage a professional engineer to prepare a final property survey showing significant features (real property) for Project. Include on the survey a certification, signed by professional engineer, that principal metes, bounds, lines, and levels of Project are accurately positioned as shown on the survey.

1. Show boundary lines, monuments, streets, site improvements and utilities, existing improvements and significant vegetation, adjoining properties, acreage, grade contours, and the distance and bearing from a site corner to a legal point.
2. Recording: At Substantial Completion, have the final property survey recorded by or with authorities having jurisdiction as the official "property survey."

3.5 INSTALLATION

A. Locate the Work and components of the Work accurately, in correct alignment and elevation, as indicated.

1. Make vertical work plumb, and make horizontal work level.
2. Where space is limited, install components to maximize space available for maintenance and ease of removal for replacement.
3. Conceal pipes, ducts, and wiring in finished areas unless otherwise indicated.
4. Maintain minimum headroom clearance of 96 inches in occupied spaces and 90 inches in unoccupied spaces, unless otherwise indicated on Drawings.

B. Comply with manufacturer's written instructions and recommendations for installing products in applications indicated.

C. Install products at the time and under conditions that will ensure satisfactory results as judged by Architect. Maintain conditions required for product performance until Substantial Completion.

D. Conduct construction operations, so no part of the Work is subjected to damaging operations or loading in excess of that expected during normal conditions of occupancy of type expected for Project.

Copyright © 2025 by the American Institute of Architects. Warning: This AIA MasterSpec-based document is protected by U.S. Copyright Law and International Treaties. It was created by "Michael Shilale Architects, LLP" for "Renovation of Rockland Green Administrative Headquarters and Construction of an Immersive Theatre Experience". A valid, current MasterSpec license is required for editing and use of this document for any other project.(22360)

E. Sequence the Work and allow adequate clearances to accommodate movement of construction items on-site and placement in permanent locations.

F. Tools and Equipment: Select tools or equipment that minimize production of excessive noise levels.

G. Templates: Obtain and distribute to the parties involved templates for Work specified to be factory prepared and field installed. Check Shop Drawings of other portions of the Work to confirm that adequate provisions are made for locating and installing products to comply with indicated requirements.

H. Attachment: Provide blocking and attachment plates and anchors and fasteners of adequate size and number to securely anchor each component in place, accurately located and aligned with other portions of the Work. Where size and type of attachments are not indicated, verify size and type required for load conditions with manufacturer.

1. Mounting Heights: Where mounting heights are not indicated, mount components at heights directed by Architect.
2. Allow for building movement, including thermal expansion and contraction.
3. Coordinate installation of anchorages. Furnish setting drawings, templates, and directions for installing anchorages, including sleeves, concrete inserts, anchor bolts, and items with integral anchors, that are to be embedded in concrete or masonry. Deliver such items to Project site in time for installation.

I. Joints: Make joints of uniform width. Where joint locations in exposed Work are not indicated, arrange joints for the best visual effect, as judged by Architect. Fit exposed connections together to form hairline joints.

3.6 CUTTING AND PATCHING

A. General: Employ skilled workers to perform cutting and patching. Proceed with cutting and patching at the earliest feasible time, and complete without delay.

1. Cut in-place construction to provide for installation of other components or performance of other construction, and subsequently patch as required to restore surfaces to their original condition.

B. Existing Warranties: Remove, replace, patch, and repair materials and surfaces cut or damaged during installation or cutting and patching operations, by methods and with materials so as not to void existing warranties.

C. Temporary Support: Provide temporary support of Work to be cut.

D. Protection: Protect in-place construction during cutting and patching to prevent damage. Provide protection from adverse weather conditions for portions of Project that might be exposed during cutting and patching operations.

Copyright © 2025 by the American Institute of Architects. Warning: This AIA MasterSpec-based document is protected by U.S. Copyright Law and International Treaties. It was created by "Michael Shilale Architects, LLP" for "Renovation of Rockland Green Administrative Headquarters and Construction of an Immersive Theatre Experience". A valid, current MasterSpec license is required for editing and use of this document for any other project.(22360)

E. Adjacent Occupied Areas: Where interference with use of adjoining areas or interruption of free passage to adjoining areas is unavoidable, coordinate cutting and patching in accordance with requirements in Section 011000 "Summary."

F. Existing Utility Services and Mechanical/Electrical Systems: Where existing services/systems are required to be removed, relocated, or abandoned, bypass such services/systems before cutting to minimize interruption to occupied areas.

G. Cutting: Cut in-place construction by sawing, drilling, breaking, chipping, grinding, and similar operations, including excavation, using methods least likely to damage elements retained or adjoining construction. If possible, review proposed procedures with original Installer; comply with original Installer's written recommendations.

1. In general, use hand or small power tools designed for sawing and grinding, not hammering and chopping. Cut holes and slots neatly to minimum size required, and with minimum disturbance of adjacent surfaces. Temporarily cover openings when not in use.
2. Finished Surfaces: Cut or drill from the exposed or finished side into concealed surfaces.
3. Concrete and Masonry: Cut using a cutting machine, such as an abrasive saw or a diamond-core drill.
4. Excavating and Backfilling: Comply with requirements in applicable Sections where required by cutting and patching operations.
5. Mechanical and Electrical Services: Cut off pipe or conduit in walls or partitions to be removed. Cap, valve, or plug and seal remaining portion of pipe or conduit to prevent entrance of moisture or other foreign matter after cutting.
6. Proceed with patching after construction operations requiring cutting are complete.

H. Patching: Patch construction by filling, repairing, refinishing, closing up, and similar operations following performance of other Work. Patch with durable seams that are as invisible as practicable, as judged by Architect. Provide materials and comply with installation requirements specified in other Sections, where applicable.

1. Inspection: Where feasible, test and inspect patched areas after completion to demonstrate physical integrity of installation.
2. Exposed Finishes: Restore exposed finishes of patched areas and extend finish restoration into retained adjoining construction in a manner that will eliminate evidence of patching and refinishing.
   a. Clean piping, conduit, and similar features before applying paint or other finishing materials.
   b. Restore damaged pipe covering to its original condition.
3. Floors and Walls: Where walls or partitions that are removed extend one finished area into another, patch and repair floor and wall surfaces in the new space. Provide an even surface of uniform finish, color, texture, and appearance. Remove in-place floor and wall coverings and replace with new materials, if necessary, to achieve uniform color and appearance.
   a. Where patching occurs in a painted surface, prepare substrate and apply primer and intermediate paint coats appropriate for substrate over the patch, and apply final paint coat over entire unbroken surface containing the patch, corner to corner of wall and edge to edge of ceiling. Provide additional coats until patch blends with adjacent surfaces.

Copyright © 2025 by the American Institute of Architects. Warning: This AIA MasterSpec-based document is protected by U.S. Copyright Law and International Treaties. It was created by "Michael Shilale Architects, LLP" for "Renovation of Rockland Green Administrative Headquarters and Construction of an Immersive Theatre Experience". A valid, current MasterSpec license is required for editing and use of this document for any other project.(22360)

4. Ceilings: Patch, repair, or rehang in-place ceilings as necessary to provide an even-plane surface of uniform appearance.
5. Exterior Building Enclosure: Patch components in a manner that restores enclosure to a weathertight condition and ensures thermal and moisture integrity of building enclosure.

I. Cleaning: Clean areas and spaces where cutting and patching are performed. Remove paint, mortar, oils, putty, and similar materials from adjacent finished surfaces.

3.7 COORDINATION OF OWNER'S PORTION OF THE WORK

A. Site Access: Provide access to Project site for Owner's construction personnel and Owner's separate contractors.

1. Provide temporary facilities required for Owner-furnished, Contractor-installed and Owner-furnished, Owner-installed products.
2. Refer to Section 011000 "Summary" for other requirements for Owner-furnished, Contractor-installed and Owner-furnished, Owner-installed products.

B. Coordination: Coordinate construction and operations of the Work with work performed by Owner's construction personnel and Owner's separate contractors.

1. Construction Schedule: Inform Owner of Contractor's preferred construction schedule for Owner's portion of the Work. Adjust construction schedule based on a mutually agreeable timetable. Notify Owner if changes to schedule are required due to differences in actual construction progress.
2. Preinstallation Conferences: Include Owner's construction personnel and Owner's separate contractors at preinstallation conferences covering portions of the Work that are to receive Owner's work. Attend preinstallation conferences conducted by Owner's construction personnel if portions of the Work depend on Owner's construction.

3.8 PROGRESS CLEANING

A. Clean Project site and work areas daily, including common areas. Enforce requirements strictly. Dispose of materials lawfully.

1. Comply with requirements in NFPA 241 for removal of combustible waste materials and debris.
2. Do not hold waste materials more than seven days during normal weather or three days if the temperature is expected to rise above 80 deg F.
3. Containerize hazardous and unsanitary waste materials separately from other waste. Mark containers appropriately and dispose of legally, in accordance with regulations.
   a. Use containers intended for holding waste materials of type to be stored.
4. Coordinate progress cleaning for joint-use areas where Contractor and other contractors are working concurrently.

B. Site: Maintain Project site free of waste materials and debris.

Copyright © 2025 by the American Institute of Architects. Warning: This AIA MasterSpec-based document is protected by U.S. Copyright Law and International Treaties. It was created by "Michael Shilale Architects, LLP" for "Renovation of Rockland Green Administrative Headquarters and Construction of an Immersive Theatre Experience". A valid, current MasterSpec license is required for editing and use of this document for any other project.(22360)

C. Work Areas: Clean areas where Work is in progress to the level of cleanliness necessary for proper execution of the Work.

1. Remove liquid spills promptly.
2. Where dust would impair proper execution of the Work, broom-clean or vacuum the entire work area, as appropriate.

D. Installed Work: Keep installed work clean. Clean installed surfaces in accordance with written instructions of manufacturer or fabricator of product installed, using only cleaning materials specifically recommended. If specific cleaning materials are not recommended, use cleaning materials that are not hazardous to health or property and that will not damage exposed surfaces.

E. Concealed Spaces: Remove debris from concealed spaces before enclosing the space.

F. Exposed Surfaces: Clean exposed surfaces and protect as necessary to ensure freedom from damage and deterioration at time of Substantial Completion.

G. Waste Disposal: Do not bury or burn waste materials on-site. Do not wash waste materials down sewers or into waterways. Comply with waste disposal requirements in Section 017419 "Construction Waste Management and Disposal."

H. During handling and installation, clean and protect construction in progress and adjoining materials already in place. Apply protective covering where required to ensure protection from damage or deterioration at Substantial Completion.

I. Clean and provide maintenance on completed construction as frequently as necessary through the remainder of the construction period. Adjust and lubricate operable components to ensure operability without damaging effects.

J. Limiting Exposures: Supervise construction operations to ensure that no part of the construction, completed or in progress, is subject to harmful, dangerous, damaging, or otherwise deleterious exposure during the construction period.

3.9 STARTING AND ADJUSTING

A. Coordinate startup and adjusting of equipment and operating components with requirements in Section 019113 "General Commissioning Requirements."

B. Start equipment and operating components to confirm proper operation. Remove malfunctioning units, replace with new units, and retest.

C. Adjust equipment for proper operation. Adjust operating components for proper operation without binding.

D. Test each piece of equipment to verify proper operation. Test and adjust controls and safeties. Replace damaged and malfunctioning controls and equipment.

E. Manufacturer's Field Service: Comply with qualification requirements in Section 014000 "Quality Requirements."

Copyright © 2025 by the American Institute of Architects. Warning: This AIA MasterSpec-based document is protected by U.S. Copyright Law and International Treaties. It was created by "Michael Shilale Architects, LLP" for "Renovation of Rockland Green Administrative Headquarters and Construction of an Immersive Theatre Experience". A valid, current MasterSpec license is required for editing and use of this document for any other project.(22360)

3.10 PROTECTION OF INSTALLED CONSTRUCTION

A. Provide final protection and maintain conditions that ensure installed Work is without damage or deterioration at time of Substantial Completion.

B. Protection of Existing Items: Provide protection and ensure that existing items to remain undisturbed by construction are maintained in condition that existed at commencement of the Work.

C. Comply with manufacturer's written instructions for temperature and relative humidity.

3.11 CORRECTION OF THE WORK

A. Repair or remove and replace damaged, defective, or nonconforming Work. Restore damaged substrates and finishes.

1. Repairing includes replacing defective parts, refinishing damaged surfaces, touching up with matching materials, and properly adjusting operating equipment.

B. Repair Work previously completed and subsequently damaged during construction period. Repair to like-new condition.

C. Restore permanent facilities used during construction to their specified condition.

D. Remove and replace damaged surfaces that are exposed to view if surfaces cannot be repaired without visible evidence of repair.

E. Repair components that do not operate properly. Remove and replace operating components that cannot be repaired.

F. Remove and replace chipped, scratched, and broken glass or reflective surfaces.

END OF SECTION 017300

Copyright © 2025 by the American Institute of Architects. Warning: This AIA MasterSpec-based document is protected by U.S. Copyright Law and International Treaties. It was created by "Michael Shilale Architects, LLP" for "Renovation of Rockland Green Administrative Headquarters and Construction of an Immersive Theatre Experience". A valid, current MasterSpec license is required for editing and use of this document for any other project.(22360)

SECTION 017419 - CONSTRUCTION WASTE MANAGEMENT AND DISPOSAL

PART 1 - GENERAL

1.1 RELATED DOCUMENTS

A. Drawings and general provisions of the Contract, including General and Supplementary Conditions and other Division 01 Specification Sections, apply to this Section.

1.2 SUMMARY

A. Section includes administrative and procedural requirements for the following:

1. Disposing of nonhazardous demolition and construction waste.

B. Related Requirements:

1. Section 042000 "Unit Masonry" for disposal requirements for masonry waste.
2. Section 311000 "Site Clearing" for disposition of waste resulting from site clearing and removal of above- and below-grade improvements.

1.3 DEFINITIONS

A. Construction Waste: Building, structure, and site improvement materials and other solid waste resulting from construction, remodeling, renovation, or repair operations. Construction waste includes packaging.

B. Demolition Waste: Building, structure, and site improvement materials resulting from demolition operations.

C. Disposal: Removal of demolition or construction waste and subsequent salvage, sale, recycling, or deposit in landfill, incinerator acceptable to authorities having jurisdiction, or designated spoil areas on Owner’s property.

D. Recycle: Recovery of demolition or construction waste for subsequent processing in preparation for reuse.

E. Salvage: Recovery of demolition or construction waste and subsequent sale or reuse in another facility.

F. Salvage and Reuse: Recovery of demolition or construction waste and subsequent incorporation into the Work.

Copyright © 2025 by the American Institute of Architects. Warning: This AIA MasterSpec-based document is protected by U.S. Copyright Law and International Treaties. It was created by "Michael Shilale Architects, LLP" for "Renovation of Rockland Green Administrative Headquarters and Construction of an Immersive Theatre Experience". A valid, current MasterSpec license is required for editing and use of this document for any other project.(22360)

1.4 MATERIALS OWNERSHIP

A. Unless otherwise indicated, demolition and construction waste becomes property of Contractor.

B. Historic items, relics, antiques, and similar objects including, but not limited to, cornerstones and their contents, commemorative plaques and tablets, and other items of interest or value to Owner that may be uncovered during demolition remain the property of Owner.

1. Carefully salvage in a manner to prevent damage and promptly return to Owner.

1.5 ACTION SUBMITTALS

A. Waste Management Plan: Submit plan within 30 days of date established for the Notice of Award.

1.6 INFORMATIONAL SUBMITTALS

A. Landfill and Incinerator Disposal Records: Indicate receipt and acceptance of waste by landfills and incinerator facilities licensed to accept them. Include manifests, weight tickets, receipts, and invoices.

B. Statement of Refrigerant Recovery: Signed by refrigerant recovery technician responsible for recovering refrigerant, stating that all refrigerant that was present was recovered and that recovery was performed according to EPA regulations. Include name and address of technician and date refrigerant was recovered.

1.7 QUALITY ASSURANCE

A. Waste Management Coordinator Qualifications: Experienced firm, or individual employed and assigned by General Contractor, with a record of successful waste management coordination of projects with similar requirements. Superintendent may serve as Waste Management Coordinator.

B. Regulatory Requirements: Comply with transportation and disposal regulations of authorities having jurisdiction.

1.8 WASTE MANAGEMENT PLAN

A. General: Develop a waste management plan according to requirements in this Section. Plan shall consist of waste identification, waste reduction work plan, and cost/revenue analysis. Indicate quantities by weight or volume, but use same units of measure throughout waste management plan.

Copyright © 2025 by the American Institute of Architects. Warning: This AIA MasterSpec-based document is protected by U.S. Copyright Law and International Treaties. It was created by "Michael Shilale Architects, LLP" for "Renovation of Rockland Green Administrative Headquarters and Construction of an Immersive Theatre Experience". A valid, current MasterSpec license is required for editing and use of this document for any other project.(22360)

PART 2 - PRODUCTS

PART 3 - EXECUTION

3.1 PLAN IMPLEMENTATION

A. General: Implement approved waste management plan. Provide handling, containers, storage, signage, transportation, and other items as required to implement waste management plan during the entire duration of the Contract.

1. Comply with operation, termination, and removal requirements in Section 015000 "Temporary Facilities and Controls."

B. Training: Train workers, subcontractors, and suppliers on proper waste management procedures, as appropriate for the Work.

1. Distribute waste management plan to everyone concerned within three days of submittal return.
2. Distribute waste management plan to entities when they first begin work on-site. Review plan procedures and locations established for salvage, recycling, and disposal.

C. Site Access and Temporary Controls: Conduct waste management operations to ensure minimum interference with roads, streets, walks, walkways, and other adjacent occupied and used facilities.

1. Designate and label specific areas on Project site necessary for separating materials that are to be salvaged and recycled.
2. Comply with Section 015000 "Temporary Facilities and Controls" for controlling dust and dirt, environmental protection, and noise control.

3.2 DISPOSAL OF WASTE

A. General: Except for items or materials to be salvaged or recycled, remove waste materials from Project site and legally dispose of them in a landfill or incinerator acceptable to authorities having jurisdiction.

1. Except as otherwise specified, do not allow waste materials that are to be disposed of accumulate on-site.
2. Remove and transport debris in a manner that will prevent spillage on adjacent surfaces and areas.

B. Burning: Do not burn waste materials.

Copyright © 2025 by the American Institute of Architects. Warning: This AIA MasterSpec-based document is protected by U.S. Copyright Law and International Treaties. It was created by "Michael Shilale Architects, LLP" for "Renovation of Rockland Green Administrative Headquarters and Construction of an Immersive Theatre Experience". A valid, current MasterSpec license is required for editing and use of this document for any other project.(22360)

3.3 ATTACHMENTS

END OF SECTION 017419

Copyright © 2025 by the American Institute of Architects. Warning: This AIA MasterSpec-based document is protected by U.S. Copyright Law and International Treaties. It was created by "Michael Shilale Architects, LLP" for "Renovation of Rockland Green Administrative Headquarters and Construction of an Immersive Theatre Experience". A valid, current MasterSpec license is required for editing and use of this document for any other project.(22360)

SECTION 017700 - CLOSEOUT PROCEDURES

PART 1 - GENERAL

1.1 SUMMARY

A. Section includes administrative and procedural requirements for Contract closeout, including, but not limited to, the following:

1. Substantial Completion procedures.
2. Final Completion procedures.
3. List of incomplete items.
4. Submittal of Project warranties.
5. Final cleaning.

B. Related Requirements:

1. Section 012900 "Payment Procedures" for requirements for Applications for Payment for Substantial Completion and Final Completion.
2. Section 017823 "Operation and Maintenance Data" for additional operation and maintenance manual requirements.
3. Section 017839 "Project Record Documents" for submitting Record Drawings, Record Specifications, and Record Product Data.
4. Section 017900 "Demonstration and Training" for requirements to train Owner's maintenance personnel to adjust, operate, and maintain products, equipment, and systems.

1.2 DEFINITIONS

A. List of Incomplete Items: Contractor-prepared list of items to be completed or corrected, prepared for the Architect's use prior to Architect's inspection, to determine if the Work is substantially complete.

1.3 ACTION SUBMITTALS

A. Product Data: For each type of cleaning agent.

B. Contractor's List of Incomplete Items: Initial submittal at Substantial Completion.

C. Certified List of Incomplete Items: Final submittal at Final Completion.

1.4 CLOSEOUT SUBMITTALS

A. Certificates of Release: From authorities having jurisdiction.

Copyright © 2025 by the American Institute of Architects. Warning: This AIA MasterSpec-based document is protected by U.S. Copyright Law and International Treaties. It was created by "Michael Shilale Architects, LLP" for "Renovation of Rockland Green Administrative Headquarters and Construction of an Immersive Theatre Experience". A valid, current MasterSpec license is required for editing and use of this document for any other project.(22360)

B. Certificate of Insurance: For continuing coverage.

C. Field Report: For pest-control inspection.

1.5 MAINTENANCE MATERIAL SUBMITTALS

A. Schedule of Maintenance Material Items: For maintenance material submittal items required by other Sections.

1.6 SUBSTANTIAL COMPLETION PROCEDURES

A. Contractor's List of Incomplete Items: Prepare and submit a list of items to be completed and corrected (Contractor's "punch list"), indicating the value of each item on the list and reasons why the Work is incomplete.

B. Submittals Prior to Substantial Completion: Complete the following a minimum of 10 days prior to requesting inspection for determining date of Substantial Completion. List items below that are incomplete at time of request.

1. Certificates of Release: Obtain and submit releases from authorities having jurisdiction, permitting Owner unrestricted use of the Work and access to services and utilities. Include occupancy permits, operating certificates, and similar releases.
2. Submit closeout submittals specified in other Division 01 Sections, including Project Record Documents, operation and maintenance manuals, damage or settlement surveys, property surveys, and similar final record information.
3. Submit closeout submittals specified in individual Sections, including specific warranties, workmanship bonds, maintenance service agreements, final certifications, and similar documents.
4. Submit maintenance material submittals specified in individual Sections, including tools, spare parts, extra materials, and similar items, and deliver to location designated by Architect . Label with manufacturer's name and model number.
   a. Schedule of Maintenance Material Items: Prepare and submit schedule of maintenance material submittal items, including name and quantity of each item and name and number of related Specification Section. Obtain Architect's signature for receipt of submittals.
5. Submit testing, adjusting, and balancing records.
6. Submit changeover information related to Owner's occupancy, use, operation, and maintenance.

C. Procedures Prior to Substantial Completion: Complete the following a minimum of 10 days prior to requesting inspection for determining date of Substantial Completion. List items below that are incomplete at time of request.

1. Advise Owner of pending insurance changeover requirements.
2. Make final changeover of permanent locks and deliver keys to Owner. Advise Owner's personnel of changeover in security provisions.
3. Complete startup and testing of systems and equipment.
4. Perform preventive maintenance on equipment used prior to Substantial Completion.

Copyright © 2025 by the American Institute of Architects. Warning: This AIA MasterSpec-based document is protected by U.S. Copyright Law and International Treaties. It was created by "Michael Shilale Architects, LLP" for "Renovation of Rockland Green Administrative Headquarters and Construction of an Immersive Theatre Experience". A valid, current MasterSpec license is required for editing and use of this document for any other project.(22360)

5. Instruct Owner's personnel in operation, adjustment, and maintenance of products, equipment, and systems. Submit demonstration and training video recordings specified in Section 017900 "Demonstration and Training."
6. Advise Owner of changeover in utility services.
7. Participate with Owner in conducting inspection and walkthrough with local emergency responders.
8. Terminate and remove temporary facilities from Project site, along with mockups, construction tools, and similar elements.
9. Complete final cleaning requirements.
10. Touch up paint and otherwise repair and restore marred exposed finishes to eliminate visual defects.

D. Inspection: Submit a written request for inspection to determine Substantial Completion a minimum of 10 days prior to date the Work will be completed and ready for final inspection and tests. On receipt of request, Architect and Construction Manager will either proceed with inspection or notify Contractor of unfulfilled requirements. Architect will prepare the Certificate of Substantial Completion after inspection or will notify Contractor of items, either on Contractor's list or additional items identified by Architect, that must be completed or corrected before certificate will be issued.

1. Request reinspection when the Work identified in previous inspections as incomplete is completed or corrected.
2. Results of completed inspection will form the basis of requirements for Final Completion.

1.7 FINAL COMPLETION PROCEDURES

A. Submittals Prior to Final Completion: Before requesting final inspection for determining Final Completion, complete the following:

1. Submit a final Application for Payment in accordance with Section 012900 "Payment Procedures."
2. Certified List of Incomplete Items: Submit certified copy of Architect's Substantial Completion inspection list of items to be completed or corrected (punch list), endorsed and dated by Architect. Certified copy of the list will state that each item has been completed or otherwise resolved for acceptance.
3. Certificate of Insurance: Submit evidence of final, continuing insurance coverage complying with insurance requirements.

B. Inspection: Submit a written request for final inspection to determine acceptance a minimum of 10 days prior to date the Work will be completed and ready for final inspection and tests. On receipt of request, Architect and Construction Manager will either proceed with inspection or notify Contractor of unfulfilled requirements. Architect will prepare a final Certificate for Payment after inspection or will notify Contractor of construction that must be completed or corrected before certificate will be issued.

1. Request reinspection when the Work identified in previous inspections as incomplete is completed or corrected.

Copyright © 2025 by the American Institute of Architects. Warning: This AIA MasterSpec-based document is protected by U.S. Copyright Law and International Treaties. It was created by "Michael Shilale Architects, LLP" for "Renovation of Rockland Green Administrative Headquarters and Construction of an Immersive Theatre Experience". A valid, current MasterSpec license is required for editing and use of this document for any other project.(22360)

1.8 LIST OF INCOMPLETE ITEMS

A. Organization of List: Include name and identification of each space and area affected by construction operations for incomplete items and items needing correction including, if necessary, areas disturbed by Contractor that are outside the limits of construction.

1. Organize list of spaces in sequential order, starting with exterior areas first and proceeding from lowest floor to highest floor, listed by room or space number.
2. Organize items applying to each space by major element, including categories for ceilings, individual walls, floors, equipment, and building systems.
3. Include the following information at the top of each page:
   a. Project name.
   b. Date.
   c. Name of Architect and Construction Manager.
   d. Name of Contractor.
   e. Page number.
4. Submit list of incomplete items in the following format:
   a. MS Excel Electronic File: Architect , through Construction Manager, will return annotated file.

1.9 SUBMITTAL OF PROJECT WARRANTIES

A. Time of Submittal: Submit written warranties on request of Architect for designated portions of the Work where warranties are indicated to commence on dates other than date of Substantial Completion, or when delay in submittal of warranties might limit Owner's rights under warranty.

B. Partial Occupancy: Submit properly executed warranties within 15 days of completion of designated portions of the Work that are completed and occupied or used by Owner during construction period by separate agreement with Contractor.

C. Organize warranty documents into an orderly sequence based on the table of contents of Project Manual.

D. Warranty Electronic File: Provide warranties and bonds in PDF format. Assemble complete warranty and bond submittal package into a single electronic PDF file with bookmarks enabling navigation to each item. Provide bookmarked table of contents at beginning of document.

1. Submit on digital media acceptable to Architect .

PART 2 - PRODUCTS

2.1 MATERIALS

A. Cleaning Agents: Use cleaning materials and agents recommended by manufacturer or fabricator of the surface to be cleaned. Do not use cleaning agents that are potentially hazardous to health or property or that might damage finished surfaces.

Copyright © 2025 by the American Institute of Architects. Warning: This AIA MasterSpec-based document is protected by U.S. Copyright Law and International Treaties. It was created by "Michael Shilale Architects, LLP" for "Renovation of Rockland Green Administrative Headquarters and Construction of an Immersive Theatre Experience". A valid, current MasterSpec license is required for editing and use of this document for any other project.(22360)

PART 3 - EXECUTION

3.1 FINAL CLEANING

A. General: Perform final cleaning. Conduct cleaning and waste-removal operations to comply with local laws and ordinances and Federal and local environmental and antipollution regulations.

B. Cleaning: Employ experienced workers or professional cleaners for final cleaning. Clean each surface or unit to condition expected in an average commercial building cleaning and maintenance program. Comply with manufacturer's written instructions.

1. Complete the following cleaning operations before requesting inspection for certification of Substantial Completion for entire Project or for a designated portion of Project:
   a. Clean Project site of rubbish, waste material, litter, and other foreign substances.
   b. Sweep paved areas broom clean. Remove petrochemical spills, stains, and other foreign deposits.
   c. Rake grounds that are not planted, mulched, or paved to a smooth, even-textured surface.
   d. Remove tools, construction equipment, machinery, and surplus material from Project site.
   e. Remove snow and ice to provide safe access to building.
   f. Clean exposed exterior and interior hard-surfaced finishes to a dirt-free condition, free of stains, films, and similar foreign substances. Avoid disturbing natural weathering of exterior surfaces. Restore reflective surfaces to their original condition.
   g. Remove debris and surface dust from limited-access spaces, including roofs, plenums, shafts, trenches, equipment vaults, manholes, attics, and similar spaces.
   h. Clean flooring, removing debris, dirt, and staining; clean in accordance with manufacturer's instructions.
   i. Vacuum and mop concrete.
   j. Vacuum carpet and similar soft surfaces, removing debris and excess nap; clean in accordance with manufacturer's instructions if visible soil or stains remain.
   k. Clean transparent materials, including mirrors and glass in doors and windows. Remove glazing compounds and other noticeable, vision-obscuring materials. Polish mirrors and glass, taking care not to scratch surfaces.
   l. Remove labels that are not permanent.
   m. Clean plumbing fixtures to a sanitary condition, free of stains, including stains resulting from water exposure.
   n. Replace disposable air filters and clean permanent air filters. Clean exposed surfaces of diffusers, registers, and grills.
   o. Clean ducts, blowers, and coils if units were operated without filters during construction or that display contamination with particulate matter on inspection.
      1) Clean HVAC system in compliance with NADCA ACR. Provide written report on completion of cleaning.
   p. Clean luminaires, lamps, globes, and reflectors to function with full efficiency.
   q. Clean strainers.
   r. Leave Project clean and ready for occupancy.

Copyright © 2025 by the American Institute of Architects. Warning: This AIA MasterSpec-based document is protected by U.S. Copyright Law and International Treaties. It was created by "Michael Shilale Architects, LLP" for "Renovation of Rockland Green Administrative Headquarters and Construction of an Immersive Theatre Experience". A valid, current MasterSpec license is required for editing and use of this document for any other project.(22360)

C. Construction Waste Disposal: Comply with waste-disposal requirements in Section 017419 "Construction Waste Management and Disposal."

3.2 CORRECTION OF THE WORK

A. Complete repair and restoration operations required by "Correction of the Work" Article in Section 017300 "Execution" before requesting inspection for determination of Substantial Completion.

END OF SECTION 017700

Copyright © 2025 by the American Institute of Architects. Warning: This AIA MasterSpec-based document is protected by U.S. Copyright Law and International Treaties. It was created by "Michael Shilale Architects, LLP" for "Renovation of Rockland Green Administrative Headquarters and Construction of an Immersive Theatre Experience". A valid, current MasterSpec license is required for editing and use of this document for any other project.(22360)

SECTION 017823 - OPERATION AND MAINTENANCE DATA

PART 1 - GENERAL

1.1 RELATED DOCUMENTS

A. Drawings and general provisions of the Contract, including General and Supplementary Conditions and other Division 01 Specification Sections, apply to this Section.

1.2 SUMMARY

A. Section includes administrative and procedural requirements for preparing operation and maintenance manuals, including the following:

1. Operation and maintenance documentation directory manuals.
2. Systems and equipment operation manuals.
3. Systems and equipment maintenance manuals.
4. Product maintenance manuals.

B. Related Requirements:

1. Section 011200 "Multiple Contract Summary" for coordinating operation and maintenance manuals covering the Work of multiple contracts.
2. Section 013300 "Submittal Procedures" for submitting copies of submittals for operation and maintenance manuals.
3. Section 019113 "General Commissioning Requirements" for verification and compilation of data into operation and maintenance manuals.

1.3 DEFINITIONS

A. System: An organized collection of parts, equipment, or subsystems united by regular interaction.

B. Subsystem: A portion of a system with characteristics similar to a system.

1.4 CLOSEOUT SUBMITTALS

A. Submit operation and maintenance manuals indicated. Provide content for each manual as specified in individual Specification Sections, and as reviewed and approved at the time of Section submittals. Submit reviewed manual content formatted and organized as required by this Section.

1. Architect and Commissioning Authority will comment on whether content of operation and maintenance submittals is acceptable.

Copyright © 2025 by the American Institute of Architects. Warning: This AIA MasterSpec-based document is protected by U.S. Copyright Law and International Treaties. It was created by "Michael Shilale Architects, LLP" for "Renovation of Rockland Green Administrative Headquarters and Construction of an Immersive Theatre Experience". A valid, current MasterSpec license is required for editing and use of this document for any other project.(22360)

2. Where applicable, clarify and update reviewed manual content to correspond to revisions and field conditions.

B. Format: Submit operation and maintenance manuals in the following format:

1. Submit on digital media acceptable to Architect . Enable reviewer comments on draft submittals.

C. Initial Manual Submittal: Submit draft copy of each manual at least 30 days before commencing demonstration and training. Architect and Commissioning Authority will comment on whether general scope and content of manual are acceptable.

D. Final Manual Submittal: Submit each manual in final form prior to requesting inspection for Substantial Completion and at least 15 days before commencing demonstration and training. Architect and Commissioning Authority will return copy with comments.

1. Correct or revise each manual to comply with Architect's and Commissioning Authority's comments. Submit copies of each corrected manual within 15 days of receipt of Architect's and Commissioning Authority's comments and prior to commencing demonstration and training.

E. Comply with Section 017700 "Closeout Procedures" for schedule for submitting operation and maintenance documentation.

1.5 FORMAT OF OPERATION AND MAINTENANCE MANUALS

A. Manuals, Electronic Files: Submit manuals in the form of a multiple file composite electronic PDF file for each manual type required.

1. Electronic Files: Use electronic files prepared by manufacturer where available. Where scanning of paper documents is required, configure scanned file for minimum readable file size.
2. File Names and Bookmarks: Bookmark individual documents based on file names. Name document files to correspond to system, subsystem, and equipment names used in manual directory and table of contents. Group documents for each system and subsystem into individual composite bookmarked files, then create composite manual, so that resulting bookmarks reflect the system, subsystem, and equipment names in a readily navigated file tree. Configure electronic manual to display bookmark panel on opening file.

1.6 REQUIREMENTS FOR EMERGENCY, OPERATION, AND MAINTENANCE MANUALS

A. Organization of Manuals: Unless otherwise indicated, organize each manual into a separate section for each system and subsystem, and a separate section for each piece of equipment not part of a system. Each manual shall contain the following materials, in the order listed:

1. Title page.
2. Table of contents.
3. Manual contents.

Copyright © 2025 by the American Institute of Architects. Warning: This AIA MasterSpec-based document is protected by U.S. Copyright Law and International Treaties. It was created by "Michael Shilale Architects, LLP" for "Renovation of Rockland Green Administrative Headquarters and Construction of an Immersive Theatre Experience". A valid, current MasterSpec license is required for editing and use of this document for any other project.(22360)

B. Title Page: Include the following information:

1. Subject matter included in manual.
2. Name and address of Project.
3. Name and address of Owner.
4. Date of submittal.
5. Name and contact information for Contractor.
6. Name and contact information for Construction Manager.
7. Name and contact information for Architect.
8. Name and contact information for Commissioning Authority.
9. Names and contact information for major consultants to the Architect that designed the systems contained in the manuals.
10. Cross-reference to related systems in other operation and maintenance manuals.

C. Table of Contents: List each product included in manual, identified by product name, indexed to the content of the volume, and cross-referenced to Specification Section number in Project Manual.

D. Manual Contents: Organize into sets of manageable size. Arrange contents alphabetically by system, subsystem, and equipment. If possible, assemble instructions for subsystems, equipment, and components of one system into a single binder.

E. Identification: In the documentation directory and in each operation and maintenance manual, identify each system, subsystem, and piece of equipment with same designation used in the Contract Documents. If no designation exists, assign a designation according to ASHRAE Guideline 4, "Preparation of Operating and Maintenance Documentation for Building Systems."

1.7 SYSTEMS AND EQUIPMENT OPERATION MANUALS

A. Systems and Equipment Operation Manual: Assemble a complete set of data indicating operation of each system, subsystem, and piece of equipment not part of a system. Include information required for daily operation and management, operating standards, and routine and special operating procedures.

1. Engage a factory-authorized service representative to assemble and prepare information for each system, subsystem, and piece of equipment not part of a system.
2. Prepare a separate manual for each system and subsystem, in the form of an instructional manual for use by Owner's operating personnel.

B. Content: In addition to requirements in this Section, include operation data required in individual Specification Sections and the following information:

1. System, subsystem, and equipment descriptions. Use designations for systems and equipment indicated on Contract Documents.
2. Performance and design criteria if Contractor has delegated design responsibility.
3. Operating standards.
4. Operating procedures.
5. Operating logs.

Copyright © 2025 by the American Institute of Architects. Warning: This AIA MasterSpec-based document is protected by U.S. Copyright Law and International Treaties. It was created by "Michael Shilale Architects, LLP" for "Renovation of Rockland Green Administrative Headquarters and Construction of an Immersive Theatre Experience". A valid, current MasterSpec license is required for editing and use of this document for any other project.(22360)

6. Wiring diagrams.
7. Control diagrams.
8. Piped system diagrams.
9. Precautions against improper use.
10. License requirements including inspection and renewal dates.

C. Descriptions: Include the following:

1. Product name and model number. Use designations for products indicated on Contract Documents.
2. Manufacturer's name.
3. Equipment identification with serial number of each component.
4. Equipment function.

D. Operating Procedures: Include the following, as applicable:

1. Startup procedures.
2. Equipment or system break-in procedures.
3. Routine and normal operating instructions.
4. Regulation and control procedures.
5. Instructions on stopping.
6. Normal shutdown instructions.
7. Special operating instructions and procedures.

E. Systems and Equipment Controls: Describe the sequence of operation, and diagram controls as installed.

F. Piped Systems: Diagram piping as installed, and identify color coding where required for identification.

1.8 SYSTEMS AND EQUIPMENT MAINTENANCE MANUALS

A. Systems and Equipment Maintenance Manuals: Assemble a complete set of data indicating maintenance of each system, subsystem, and piece of equipment not part of a system. Include manufacturers' maintenance documentation, preventive maintenance procedures and frequency, repair procedures, wiring and systems diagrams, lists of spare parts, and warranty information.

1. Engage a factory-authorized service representative to assemble and prepare information for each system, subsystem, and piece of equipment not part of a system.
2. Prepare a separate manual for each system and subsystem, in the form of an instructional manual for use by Owner's operating personnel.

B. Content: For each system, subsystem, and piece of equipment not part of a system, include source information, manufacturers' maintenance documentation, maintenance procedures, maintenance and service schedules, spare parts list and source information, maintenance service contracts, and warranties and bonds as described below.

C. Source Information: List each system, subsystem, and piece of equipment included in manual, identified by product name and arranged to match manual's table of contents. For each product,

Copyright © 2025 by the American Institute of Architects. Warning: This AIA MasterSpec-based document is protected by U.S. Copyright Law and International Treaties. It was created by "Michael Shilale Architects, LLP" for "Renovation of Rockland Green Administrative Headquarters and Construction of an Immersive Theatre Experience". A valid, current MasterSpec license is required for editing and use of this document for any other project.(22360)

list name, address, and telephone number of Installer or supplier and maintenance service agent, and cross-reference Specification Section number and title in Project Manual and drawing or schedule designation or identifier where applicable.

D. Manufacturers' Maintenance Documentation: Include the following information for each component part or piece of equipment:

1. Standard maintenance instructions and bulletins; include only sheets pertinent to product or component installed. Mark each sheet to identify each product or component incorporated into the Work. If data include more than one item in a tabular format, identify each item using appropriate references from the Contract Documents. Identify data applicable to the Work and delete references to information not applicable.
   a. Prepare supplementary text if manufacturers' standard printed data are not available and where the information is necessary for proper operation and maintenance of equipment or systems.
2. Drawings, diagrams, and instructions required for maintenance, including disassembly and component removal, replacement, and assembly.
3. Identification and nomenclature of parts and components.
4. List of items recommended to be stocked as spare parts.

E. Maintenance Procedures: Include the following information and items that detail essential maintenance procedures:

1. Test and inspection instructions.
2. Troubleshooting guide.
3. Precautions against improper maintenance.
4. Disassembly; component removal, repair, and replacement; and reassembly instructions.
5. Demonstration and training video recording, if available.

F. Maintenance and Service Schedules: Include service and lubrication requirements, list of required lubricants for equipment, and separate schedules for preventive and routine maintenance and service with standard time allotment.

1. Scheduled Maintenance and Service: Tabulate actions for daily, weekly, monthly, quarterly, semiannual, and annual frequencies.
2. Maintenance and Service Record: Include manufacturers' forms for recording maintenance.

G. Spare Parts List and Source Information: Include lists of replacement and repair parts, with parts identified and cross-referenced to manufacturers' maintenance documentation and local sources of maintenance materials and related services.

H. Maintenance Service Contracts: Include copies of maintenance agreements with name and telephone number of service agent.

I. Warranties and Bonds: Include copies of warranties and bonds and lists of circumstances and conditions that would affect validity of warranties or bonds.

1. Include procedures to follow and required notifications for warranty claims.

Copyright © 2025 by the American Institute of Architects. Warning: This AIA MasterSpec-based document is protected by U.S. Copyright Law and International Treaties. It was created by "Michael Shilale Architects, LLP" for "Renovation of Rockland Green Administrative Headquarters and Construction of an Immersive Theatre Experience". A valid, current MasterSpec license is required for editing and use of this document for any other project.(22360)

J. Drawings: Prepare drawings supplementing manufacturers' printed data to illustrate the relationship of component parts of equipment and systems and to illustrate control sequence and flow diagrams. Coordinate these drawings with information contained in record Drawings to ensure correct illustration of completed installation.

1. Do not use original project record documents as part of maintenance manuals.

1.9 PRODUCT MAINTENANCE MANUALS

A. Product Maintenance Manual: Assemble a complete set of maintenance data indicating care and maintenance of each product, material, and finish incorporated into the Work.

B. Content: Organize manual into a separate section for each product, material, and finish. Include source information, product information, maintenance procedures, repair materials and sources, and warranties and bonds, as described below.

C. Source Information: List each product included in manual, identified by product name and arranged to match manual's table of contents. For each product, list name, address, and telephone number of Installer or supplier and maintenance service agent, and cross-reference Specification Section number and title in Project Manual and drawing or schedule designation or identifier where applicable.

D. Product Information: Include the following, as applicable:

1. Product name and model number.
2. Manufacturer's name.
3. Color, pattern, and texture.
4. Reordering information for specially manufactured products.

E. Maintenance Procedures: Include manufacturer's written recommendations and the following:

1. Inspection procedures.
2. Types of cleaning agents to be used and methods of cleaning.
3. List of cleaning agents and methods of cleaning detrimental to product.
4. Schedule for routine cleaning and maintenance.
5. Repair instructions.

F. Repair Materials and Sources: Include lists of materials and local sources of materials and related services.

G. Warranties and Bonds: Include copies of warranties and bonds and lists of circumstances and conditions that would affect validity of warranties or bonds.

1. Include procedures to follow and required notifications for warranty claims.

Copyright © 2025 by the American Institute of Architects. Warning: This AIA MasterSpec-based document is protected by U.S. Copyright Law and International Treaties. It was created by "Michael Shilale Architects, LLP" for "Renovation of Rockland Green Administrative Headquarters and Construction of an Immersive Theatre Experience". A valid, current MasterSpec license is required for editing and use of this document for any other project.(22360)

PART 2 - PRODUCTS (Not Used)

PART 3 - EXECUTION (Not Used)

END OF SECTION 017823

Copyright © 2025 by the American Institute of Architects. Warning: This AIA MasterSpec-based document is protected by U.S. Copyright Law and International Treaties. It was created by "Michael Shilale Architects, LLP" for "Renovation of Rockland Green Administrative Headquarters and Construction of an Immersive Theatre Experience". A valid, current MasterSpec license is required for editing and use of this document for any other project.(22360)

SECTION 017839 - PROJECT RECORD DOCUMENTS

PART 1 - GENERAL

1.1 RELATED DOCUMENTS

A. Drawings and general provisions of the Contract, including General and Supplementary Conditions and other Division 01 Specification Sections, apply to this Section.

1.2 SUMMARY

A. Section includes administrative and procedural requirements for Project Record Documents, including the following:

1. Record Drawings.
2. Record specifications.
3. Record Product Data.
4. Miscellaneous record submittals.

B. Related Requirements:

1. Section 017300 "Execution" for final property survey.
2. Section 017700 "Closeout Procedures" for general closeout procedures.
3. Section 017823 "Operation and Maintenance Data" for operation and maintenance manual requirements.

1.3 CLOSEOUT SUBMITTALS

A. Record Drawings: Comply with the following:

1. Number of Copies: Submit one set(s) of marked-up record prints.
2. Number of Copies: Submit copies of Record Drawings as follows:
   a. Initial Submittal:
      1) Submit PDF electronic files of scanned record prints and one set(s) of file prints.
      2) Architect will indicate whether general scope of changes, additional information recorded, and quality of drafting are acceptable.
   b. Final Submittal:
      1) Submit PDF electronic files of scanned Record Prints and one set(s) of file prints.
      2) Print each drawing, whether or not changes and additional information were recorded.

B. Record Specifications: Submit annotated PDF electronic files and one paper copies of Project's Specifications, including addenda and Contract modifications.

Copyright © 2025 by the American Institute of Architects. Warning: This AIA MasterSpec-based document is protected by U.S. Copyright Law and International Treaties. It was created by "Michael Shilale Architects, LLP" for "Renovation of Rockland Green Administrative Headquarters and Construction of an Immersive Theatre Experience". A valid, current MasterSpec license is required for editing and use of this document for any other project.(22360)

C. Record Product Data: Submit annotated PDF electronic files and directories of each submittal.

1. Where record Product Data are required as part of operation and maintenance manuals, submit duplicate marked-up Product Data as a component of manual.

1.4 RECORD DRAWINGS

A. Record Digital Data Files: Immediately before inspection for Certificate of Substantial Completion, review marked-up record prints with Architect. When authorized, prepare a full set of corrected digital data files of the Contract Drawings, as follows:

1. Format: Annotated PDF electronic file with comment function enabled.
2. Incorporate changes and additional information previously marked on record prints. Delete, redraw, and add details and notations where applicable.
3. Refer instances of uncertainty to Architect for resolution.
4. Architect will furnish Contractor with one set of digital data files of the Contract Drawings for use in recording information.
   a. See Section 013100 "Project Management and Coordination" for requirements related to use of Architect's digital data files.

B. Format: Identify and date each Record Drawing; include the designation "PROJECT RECORD DRAWING" in a prominent location.

1. Record Prints: Organize record prints into manageable sets. Bind each set with durable paper cover sheets. Include identification on cover sheets.
2. Format: Annotated PDF electronic file with comment function enabled.
3. Record Digital Data Files: Organize digital data information into separate electronic files that correspond to each sheet of the Contract Drawings. Name each file with the sheet identification. Include identification in each digital data file.
4. Identification: As follows:
   a. Project name.
   b. Date.
   c. Designation "PROJECT RECORD DRAWINGS."
   d. Name of Architect.
   e. Name of Contractor.

1.5 RECORD SPECIFICATIONS

A. Preparation: Mark Specifications to indicate the actual product installation, where installation varies from that indicated in Specifications, addenda, and Contract modifications.

1. Give particular attention to information on concealed products and installations that cannot be readily identified and recorded later.
2. For each principal product, indicate whether Record Product Data has been submitted in operation and maintenance manuals instead of submitted as Record Product Data.
3. Note related Change Orders , Record Product Data, and Record Drawings where applicable.

Copyright © 2025 by the American Institute of Architects. Warning: This AIA MasterSpec-based document is protected by U.S. Copyright Law and International Treaties. It was created by "Michael Shilale Architects, LLP" for "Renovation of Rockland Green Administrative Headquarters and Construction of an Immersive Theatre Experience". A valid, current MasterSpec license is required for editing and use of this document for any other project.(22360)

B. Format: Submit record specifications as annotated PDF electronic file .

1.6 RECORD PRODUCT DATA

A. Recording: Maintain one copy of each submittal during the construction period for Project Record Document purposes. Post changes and revisions to Project Record Documents as they occur; do not wait until end of Project.

B. Preparation: Mark Product Data to indicate the actual product installation where installation varies substantially from that indicated in Product Data submittal.

1. Give particular attention to information on concealed products and installations that cannot be readily identified and recorded later.
2. Include significant changes in the product delivered to Project site and changes in manufacturer's written instructions for installation.
3. Note related Change Orders , Record Specifications, and Record Drawings where applicable.

C. Format: Submit Record Product Data as annotated PDF electronic file .

1. Include Record Product Data directory organized by Specification Section number and title, electronically linked to each item of Record Product Data.

1.7 MISCELLANEOUS RECORD SUBMITTALS

A. Assemble miscellaneous records required by other Specification Sections for miscellaneous record keeping and submittal in connection with actual performance of the Work. Bind or file miscellaneous records and identify each, ready for continued use and reference.

B. Format: Submit miscellaneous record submittals as PDF electronic file .

1. Include miscellaneous record submittals directory organized by Specification Section number and title, electronically linked to each item of miscellaneous record submittals.

1.8 MAINTENANCE OF RECORD DOCUMENTS

A. Maintenance of Record Documents: Store Record Documents in the field office apart from the Contract Documents used for construction. Do not use Project Record Documents for construction purposes. Maintain Record Documents in good order and in a clean, dry, legible condition, protected from deterioration and loss. Provide access to Project Record Documents for Architect's reference during normal working hours.

Copyright © 2025 by the American Institute of Architects. Warning: This AIA MasterSpec-based document is protected by U.S. Copyright Law and International Treaties. It was created by "Michael Shilale Architects, LLP" for "Renovation of Rockland Green Administrative Headquarters and Construction of an Immersive Theatre Experience". A valid, current MasterSpec license is required for editing and use of this document for any other project.(22360)

PART 2 - PRODUCTS (Not Used)

PART 3 - EXECUTION (Not Used)

END OF SECTION 017839

Copyright © 2025 by the American Institute of Architects. Warning: This AIA MasterSpec-based document is protected by U.S. Copyright Law and International Treaties. It was created by "Michael Shilale Architects, LLP" for "Renovation of Rockland Green Administrative Headquarters and Construction of an Immersive Theatre Experience". A valid, current MasterSpec license is required for editing and use of this document for any other project.(22360)

SECTION 017900 - DEMONSTRATION AND TRAINING

PART 1 - GENERAL

1.1 SUMMARY

A. Section includes administrative and procedural requirements for instructing Owner's personnel, including the following:

1. Instruction in operation and maintenance of systems, subsystems, and equipment.
2. Demonstration and training video recordings.

1.2 INFORMATIONAL SUBMITTALS

A. Instruction Program: Submit outline of instructional program for demonstration and training, including a list of training modules and a schedule of proposed dates, times, length of instruction time, and instructors' names for each training module. Include learning objective and outline for each training module.

1. Indicate proposed training modules using manufacturer-produced demonstration and training video recordings for systems, equipment, and products in lieu of video recording of live instructional module.

B. Qualification Data: For instructor .

C. Attendance Record: For each training module, submit list of participants and length of instruction time.

1.3 CLOSEOUT SUBMITTALS

A. Demonstration and Training Video Recordings: Submit two copies within seven days of end of each training module.

1. Identification: On each copy, provide an applied label with the following information:
   a. Name of Project.
   b. Name and address of videographer.
   c. Name of Architect.
   d. Name of Contractor.
   e. Date of video recording.
2. Transcript:
   a. Prepared and bound in format matching operation and maintenance manuals. Mark appropriate identification on front and spine of each binder. Include a cover sheet with same label information as the corresponding video recording. Include name of Project and date of video recording on each page.

Copyright © 2025 by the American Institute of Architects. Warning: This AIA MasterSpec-based document is protected by U.S. Copyright Law and International Treaties. It was created by "Michael Shilale Architects, LLP" for "Renovation of Rockland Green Administrative Headquarters and Construction of an Immersive Theatre Experience". A valid, current MasterSpec license is required for editing and use of this document for any other project.(22360)

b. Prepared in PDF electronic format. Include a cover sheet with same label information as the corresponding video recording and a table of contents with links to corresponding training components. Include name of Project and date of video recording on each page.

3. At completion of training, submit complete training manual(s) for Owner's use prepared in same paper PDF file format required for operation and maintenance manuals specified in Section 017823 "Operation and Maintenance Data."

1.4 QUALITY ASSURANCE

A. Instructor Qualifications: A factory-authorized service representative, complying with requirements in Section 014000 "Quality Requirements," experienced in operation and maintenance procedures and training.

B. Preinstruction Conference: Conduct conference at Project site to comply with requirements in Section 013100 "Project Management and Coordination." Review methods and procedures related to demonstration and training including, but not limited to, the following:

1. Inspect and discuss locations and other facilities required for instruction.
2. Review and finalize instruction schedule and verify availability of educational materials, instructors' personnel, audiovisual equipment, and facilities needed to avoid delays.
3. Review required content of instruction.
4. For instruction that must occur outside, review weather and forecasted weather conditions and procedures to follow if conditions are unfavorable.

1.5 COORDINATION

A. Coordinate instruction schedule with Owner's operations. Adjust schedule as required to minimize disrupting Owner's operations and to ensure availability of Owner's personnel.

B. Coordinate instructors, including providing notification of dates, times, length of instruction time, and course content.

C. Coordinate content of training modules with content of approved emergency, operation, and maintenance manuals. Do not submit instruction program until operation and maintenance data have been reviewed and approved by Architect.

1.6 INSTRUCTION PROGRAM

A. Program Structure: Develop an instruction program that includes individual training modules for each system and for equipment not part of a system, as required by individual Specification Sections.

B. Training Modules: Develop a learning objective and teaching outline for each module. Include a description of specific skills and knowledge that participant is expected to master. For each module, include instruction for the following as applicable to the system, equipment, or component:

Copyright © 2025 by the American Institute of Architects. Warning: This AIA MasterSpec-based document is protected by U.S. Copyright Law and International Treaties. It was created by "Michael Shilale Architects, LLP" for "Renovation of Rockland Green Administrative Headquarters and Construction of an Immersive Theatre Experience". A valid, current MasterSpec license is required for editing and use of this document for any other project.(22360)

1. Basis of System Design, Operational Requirements, and Criteria: Include the following:
    a. System, subsystem, and equipment descriptions.
    b. Performance and design criteria if Contractor is delegated design responsibility.
    c. Operating standards.
    d. Regulatory requirements.
    e. Equipment function.
    f. Operating characteristics.
    g. Limiting conditions.
    h. Performance curves.
2. Documentation: Review the following items in detail:
    a. Emergency manuals.
    b. Systems and equipment operation manuals.
    c. Systems and equipment maintenance manuals.
    d. Product maintenance manuals.
    e. Project Record Documents.
    f. Identification systems.
    g. Warranties and bonds.
    h. Maintenance service agreements and similar continuing commitments.
3. Emergencies: Include the following, as applicable:
    a. Instructions on meaning of warnings, trouble indications, and error messages.
    b. Instructions on stopping.
    c. Shutdown instructions for each type of emergency.
    d. Operating instructions for conditions outside of normal operating limits.
    e. Sequences for electric or electronic systems.
    f. Special operating instructions and procedures.
4. Operations: Include the following, as applicable:
    a. Startup procedures.
    b. Equipment or system break-in procedures.
    c. Routine and normal operating instructions.
    d. Regulation and control procedures.
    e. Control sequences.
    f. Safety procedures.
    g. Instructions on stopping.
    h. Normal shutdown instructions.
    i. Operating procedures for emergencies.
    j. Operating procedures for system, subsystem, or equipment failure.
    k. Seasonal and weekend operating instructions.
    l. Required sequences for electric or electronic systems.
    m. Special operating instructions and procedures.
5. Adjustments: Include the following:
    a. Alignments.
    b. Checking adjustments.
    c. Noise and vibration adjustments.
    d. Economy and efficiency adjustments.
6. Troubleshooting: Include the following:
    a. Diagnostic instructions.
    b. Test and inspection procedures.
7. Maintenance: Include the following:
    a. Inspection procedures.

Copyright © 2025 by the American Institute of Architects. Warning: This AIA MasterSpec-based document is protected by U.S. Copyright Law and International Treaties. It was created by "Michael Shilale Architects, LLP" for "Renovation of Rockland Green Administrative Headquarters and Construction of an Immersive Theatre Experience". A valid, current MasterSpec license is required for editing and use of this document for any other project.(22360)

b. Types of cleaning agents to be used and methods of cleaning.
c. List of cleaning agents and methods of cleaning detrimental to product.
d. Procedures for routine cleaning.
e. Procedures for preventive maintenance.
f. Procedures for routine maintenance.
g. Instruction on use of special tools.

8. Repairs: Include the following:
   a. Diagnosis instructions.
   b. Repair instructions.
   c. Disassembly; component removal, repair, and replacement; and reassembly instructions.
   d. Instructions for identifying parts and components.
   e. Review of spare parts needed for operation and maintenance.

1.7 PREPARATION

A. Assemble educational materials necessary for instruction, including documentation and training module. Assemble training modules into a training manual organized in coordination with requirements in Section 017823 "Operation and Maintenance Data."

B. Set up instructional equipment at instruction location.

1.8 INSTRUCTION

A. Facilitator: Engage a qualified facilitator to prepare instruction program and training modules, to coordinate instructors, and to coordinate between Contractor and Owner for number of participants, instruction times, and location.

B. Engage qualified instructors to instruct Owner's personnel to adjust, operate, and maintain systems, subsystems, and equipment not part of a system.

1. Architect will furnish an instructor to describe basis of system design, operational requirements, criteria, and regulatory requirements.
2. Owner will furnish an instructor to describe Owner's operational philosophy.
3. Owner will furnish Contractor with names and positions of participants.

C. Scheduling: Provide instruction at mutually agreed-on times. For equipment that requires seasonal operation, provide similar instruction at start of each season.

1. Schedule training with Owner , through Architect, with at least seven days' advance notice.

D. Training Location and Reference Material: Conduct training on-site in the completed and fully operational facility using the actual equipment in-place. Conduct training using final operation and maintenance data submittals.

E. Evaluation: At conclusion of each training module, assess and document each participant's mastery of module by use of a demonstration performance-based test.

Copyright © 2025 by the American Institute of Architects. Warning: This AIA MasterSpec-based document is protected by U.S. Copyright Law and International Treaties. It was created by "Michael Shilale Architects, LLP" for "Renovation of Rockland Green Administrative Headquarters and Construction of an Immersive Theatre Experience". A valid, current MasterSpec license is required for editing and use of this document for any other project.(22360)

F. Cleanup: Collect used and leftover educational materials and give to Owner. Remove instructional equipment. Restore systems and equipment to condition existing before initial training use.

PART 2 - PRODUCTS (Not Used)

PART 3 - EXECUTION (Not Used)

END OF SECTION 017900

Copyright © 2025 by the American Institute of Architects. Warning: This AIA MasterSpec-based document is protected by U.S. Copyright Law and International Treaties. It was created by "Michael Shilale Architects, LLP" for "Renovation of Rockland Green Administrative Headquarters and Construction of an Immersive Theatre Experience". A valid, current MasterSpec license is required for editing and use of this document for any other project.(22360)

SECTION 024119 - SELECTIVE DEMOLITION

PART 1 - GENERAL

1.1 SUMMARY

A. Section Includes:

1. Demolition and removal of selected portions of building or structure.
2. Demolition and removal of selected site elements.

B. Related Requirements:

1. Section 011000 "Summary" for restrictions on use of the premises, Owner-occupancy requirements, and phasing requirements.
2. Section 017300 "Execution" for cutting and patching procedures.

1.2 DEFINITIONS

A. Remove: Detach items from existing construction and dispose of them off-site unless indicated to be salvaged or reinstalled.

B. Remove and Salvage: Detach items from existing construction, in a manner to prevent damage, and store.

C. Remove and Reinstall: Detach items from existing construction, in a manner to prevent damage, prepare for reuse, and reinstall where indicated.

D. Existing to Remain: Leave existing items that are not to be removed and that are not otherwise indicated to be salvaged or reinstalled.

E. Dismantle: To remove by disassembling or detaching an item from a surface, using gentle methods and equipment to prevent damage to the item and surfaces; disposing of items unless indicated to be salvaged or reinstalled.

1.3 MATERIALS OWNERSHIP

A. Unless otherwise indicated, demolition waste becomes property of Contractor.

B. Historic items, relics, antiques, and similar objects including, but not limited to, cornerstones and their contents, commemorative plaques and tablets, and other items of interest or value to Owner that may be uncovered during demolition remain the property of Owner.

1. Carefully salvage in a manner to prevent damage and promptly return to Owner.

Copyright © 2025 by the American Institute of Architects. Warning: This AIA MasterSpec-based document is protected by U.S. Copyright Law and International Treaties. It was created by "Michael Shilale Architects, LLP" for "Renovation of Rockland Green Administrative Headquarters and Construction of an Immersive Theatre Experience". A valid, current MasterSpec license is required for editing and use of this document for any other project.(22360)

1.4 PREINSTALLATION MEETINGS

A. Predemolition Conference: Conduct conference at Project site .

1. Inspect and discuss condition of construction to be selectively demolished.
2. Review structural load limitations of existing structure.
3. Review and finalize selective demolition schedule and verify availability of materials, demolition personnel, equipment, and facilities needed to make progress and avoid delays.
4. Review requirements of work performed by other trades that rely on substrates exposed by selective demolition operations.
5. Review areas where existing construction is to remain and requires protection.

1.5 INFORMATIONAL SUBMITTALS

A. Proposed Protection Measures: Submit report, including Drawings, that indicates the measures proposed for protecting individuals and property , for environmental protection , for dust control and , for noise control. Indicate proposed locations and construction of barriers.

B. Schedule of Selective Demolition Activities: Indicate the following:

1. Detailed sequence of selective demolition and removal work, with starting and ending dates for each activity. Ensure Owner's building manager's on-site operations are uninterrupted.
2. Interruption of utility services. Indicate how long utility services will be interrupted.
3. Coordination for shutoff, capping, and continuation of utility services.
4. Use of elevator and stairs.
5. Coordination of Owner's continuing occupancy of portions of existing building and of Owner's partial occupancy of completed Work.

C. Statement of Refrigerant Recovery: Signed by refrigerant recovery technician responsible for recovering refrigerant, stating that all refrigerant that was present was recovered and that recovery was performed according to EPA regulations. Include name and address of technician and date refrigerant was recovered.

D. Warranties: Documentation indicating that existing warranties are still in effect after completion of selective demolition.

1.6 FIELD CONDITIONS

A. Owner will occupy portions of building immediately adjacent to selective demolition area. Conduct selective demolition so Owner's operations will not be disrupted.

B. Conditions existing at time of inspection for bidding purpose will be maintained by Owner as far as practical.

C. Notify Architect of discrepancies between existing conditions and Drawings before proceeding with selective demolition.

Copyright © 2025 by the American Institute of Architects. Warning: This AIA MasterSpec-based document is protected by U.S. Copyright Law and International Treaties. It was created by "Michael Shilale Architects, LLP" for "Renovation of Rockland Green Administrative Headquarters and Construction of an Immersive Theatre Experience". A valid, current MasterSpec license is required for editing and use of this document for any other project.(22360)

D. Hazardous Materials: It is not expected that hazardous materials will be encountered in the Work.

1. If suspected hazardous materials are encountered, do not disturb; immediately notify Architect and Owner. Hazardous materials will be removed by Owner under a separate contract.

E. Storage or sale of removed items or materials on-site is not permitted.

F. Utility Service: Maintain existing utilities indicated to remain in service and protect them against damage during selective demolition operations.

1. Maintain fire-protection facilities in service during selective demolition operations.

1.7 WARRANTY

A. Notify warrantor on completion of selective demolition, and obtain documentation verifying that existing system has been inspected and warranty remains in effect. Submit documentation at Project closeout.

1.8 COORDINATION

A. Arrange selective demolition schedule so as not to interfere with Owner's operations.

PART 2 - PRODUCTS

2.1 PERFORMANCE REQUIREMENTS

A. Regulatory Requirements: Comply with governing EPA notification regulations before beginning selective demolition. Comply with hauling and disposal regulations of authorities having jurisdiction.

B. Standards: Comply with ANSI/ASSP A10.6 and NFPA 241.

PART 3 - EXECUTION

3.1 EXAMINATION

A. Verify that utilities have been disconnected and capped before starting selective demolition operations.

B. Review Project Record Documents of existing construction or other existing condition and hazardous material information provided by Owner. Owner does not guarantee that existing conditions are same as those indicated in Project Record Documents.

Copyright © 2025 by the American Institute of Architects. Warning: This AIA MasterSpec-based document is protected by U.S. Copyright Law and International Treaties. It was created by "Michael Shilale Architects, LLP" for "Renovation of Rockland Green Administrative Headquarters and Construction of an Immersive Theatre Experience". A valid, current MasterSpec license is required for editing and use of this document for any other project.(22360)

C. Steel Tendons: Locate tensioned steel tendons and include recommendations for de-tensioning.

D. Verify that hazardous materials have been remediated before proceeding with building demolition operations.

E. Survey of Existing Conditions: Record existing conditions by use of measured drawings .

1. Before selective demolition or removal of existing building elements that will be reproduced or duplicated in final Work, make permanent record of measurements, materials, and construction details required to make exact reproduction.

3.2 PREPARATION

A. Refrigerant: Before starting demolition, remove refrigerant from mechanical equipment according to 40 CFR 82 and regulations of authorities having jurisdiction.

3.3 UTILITY SERVICES AND MECHANICAL/ELECTRICAL SYSTEMS

A. Existing Services/Systems to Remain: Maintain services/systems indicated to remain and protect them against damage.

3.4 PROTECTION

A. Temporary Protection: Provide temporary barricades and other protection required to prevent injury to people and damage to adjacent buildings and facilities to remain.

1. Provide protection to ensure safe passage of people around selective demolition area and to and from occupied portions of building.
2. Provide temporary weather protection, during interval between selective demolition of existing construction on exterior surfaces and new construction, to prevent water leakage and damage to structure and interior areas.
3. Protect walls, ceilings, floors, and other existing finish work that are to remain or that are exposed during selective demolition operations.
4. Cover and protect furniture, furnishings, and equipment that have not been removed.
5. Comply with requirements for temporary enclosures, dust control, heating, and cooling specified in Section 015000 "Temporary Facilities and Controls."

B. Temporary Shoring: Design, provide, and maintain shoring, bracing, and structural supports as required to preserve stability and prevent movement, settlement, or collapse of construction and finishes to remain, and to prevent unexpected or uncontrolled movement or collapse of construction being demolished.

1. Strengthen or add new supports when required during progress of selective demolition.

C. Remove temporary barricades and protections where hazards no longer exist.

Copyright © 2025 by the American Institute of Architects. Warning: This AIA MasterSpec-based document is protected by U.S. Copyright Law and International Treaties. It was created by "Michael Shilale Architects, LLP" for "Renovation of Rockland Green Administrative Headquarters and Construction of an Immersive Theatre Experience". A valid, current MasterSpec license is required for editing and use of this document for any other project.(22360)

3.5 SELECTIVE DEMOLITION, GENERAL

A. General: Demolish and remove existing construction only to the extent required by new construction and as indicated. Use methods required to complete the Work within limitations of governing regulations and as follows:

1. Proceed with selective demolition systematically, from higher to lower level. Complete selective demolition operations above each floor or tier before disturbing supporting members on the next lower level.
2. Neatly cut openings and holes plumb, square, and true to dimensions required. Use cutting methods least likely to damage construction to remain or adjoining construction. Use hand tools or small power tools designed for sawing or grinding, not hammering and chopping. Temporarily cover openings to remain.
3. Cut or drill from the exposed or finished side into concealed surfaces to avoid marring existing finished surfaces.
4. Do not use cutting torches until work area is cleared of flammable materials. At concealed spaces, such as duct and pipe interiors, verify condition and contents of hidden space before starting flame-cutting operations. Maintain portable fire-suppression devices during flame-cutting operations.
5. Maintain fire watch during and for at least 24 hours after flame-cutting operations.
6. Maintain adequate ventilation when using cutting torches.
7. Remove decayed, vermin-infested, or otherwise dangerous or unsuitable materials and promptly dispose of off-site.
8. Remove structural framing members and lower to ground by method suitable to avoid free fall and to prevent ground impact or dust generation.
9. Locate selective demolition equipment and remove debris and materials so as not to impose excessive loads on supporting walls, floors, or framing.
10. Dispose of demolished items and materials promptly.

B. Site Access and Temporary Controls: Conduct selective demolition and debris-removal operations to ensure minimum interference with roads, streets, walks, walkways, and other adjacent occupied and used facilities.

3.6 SELECTIVE DEMOLITION PROCEDURES FOR SPECIFIC MATERIALS

A. Concrete: Demolish in small sections. Using power-driven saw, cut concrete to a depth of at least 3/4 inch at junctures with construction to remain. Dislodge concrete from reinforcement at perimeter of areas being demolished, cut reinforcement, and then remove remainder of concrete. Neatly trim openings to dimensions indicated.

B. Concrete: Demolish in sections. Cut concrete full depth at junctures with construction to remain and at regular intervals using power-driven saw, and then remove concrete between saw cuts.

C. Masonry: Demolish in small sections. Cut masonry at junctures with construction to remain, using power-driven saw, and then remove masonry between saw cuts.

D. Concrete Slabs-on-Grade: Saw-cut perimeter of area to be demolished, and then break up and remove.

Copyright © 2025 by the American Institute of Architects. Warning: This AIA MasterSpec-based document is protected by U.S. Copyright Law and International Treaties. It was created by "Michael Shilale Architects, LLP" for "Renovation of Rockland Green Administrative Headquarters and Construction of an Immersive Theatre Experience". A valid, current MasterSpec license is required for editing and use of this document for any other project.(22360)

E. Resilient Floor Coverings: Remove floor coverings and adhesive according to recommendations in RFCI's "Recommended Work Practices for the Removal of Resilient Floor Coverings." Do not use methods requiring solvent-based adhesive strippers.

F. Roofing: Remove no more existing roofing than what can be covered in one day by new roofing and so that building interior remains watertight and weathertight. See Section 075323 EPDM Roofing for new roofing requirements.

1. Remove existing roof membrane, flashings, copings, and roof accessories.
2. Remove existing roofing system down to substrate.

3.7 DISPOSAL OF DEMOLISHED MATERIALS

A. Remove demolition waste materials from Project site and dispose of them in an EPA-approved construction and demolition waste landfill acceptable to authorities having jurisdiction.

1. Do not allow demolished materials to accumulate on-site.
2. Remove and transport debris in a manner that will prevent spillage on adjacent surfaces and areas.
3. Remove debris from elevated portions of building by chute, hoist, or other device that will convey debris to grade level in a controlled descent.
4. Comply with requirements specified in Section 017419 "Construction Waste Management and Disposal."

B. Burning: Do not burn demolished materials.

3.8 CLEANING

A. Clean adjacent structures and improvements of dust, dirt, and debris caused by selective demolition operations. Return adjacent areas to condition existing before selective demolition operations began.

END OF SECTION 024119

Copyright © 2025 by the American Institute of Architects. Warning: This AIA MasterSpec-based document is protected by U.S. Copyright Law and International Treaties. It was created by "Michael Shilale Architects, LLP" for "Renovation of Rockland Green Administrative Headquarters and Construction of an Immersive Theatre Experience". A valid, current MasterSpec license is required for editing and use of this document for any other project.(22360)

SECTION 042000 - UNIT MASONRY

PART 1 - GENERAL

1.1 SUMMARY

A. Section Includes:

1. Brick.
2. Mortar and grout materials.
3. Ties and anchors.
4. Embedded flashing.
5. Mortar and grout mixes.

B. Products Installed but not Furnished under This Section:

1. Steel lintels in unit masonry.
2. Steel shelf angles for supporting unit masonry.
3. Cavity wall insulation adhered to masonry backup.

C. Related Requirements:

1. Section 014339 "Mockups" for integrated exterior mockup requirements.
2. Section 072100 "Thermal Insulation" for cavity wall insulation.

1.2 ALLOWANCES

A. See Section 012100 "Allowances" for description of allowances affecting items specified in this Section.

1.3 DEFINITIONS

A. CMU(s): Concrete masonry unit(s).

B. Reinforced Masonry: Masonry containing reinforcing steel in grouted cells.

1.4 ACTION SUBMITTALS

A. Product Data: For each type of product.

B. Shop Drawings: For the following:

1. Masonry Units: Indicate sizes, profiles, coursing, and locations of special shapes.
2. Fabricated Flashing: Detail corner units, end-dam units, and other special applications.

Copyright © 2025 by the American Institute of Architects. Warning: This AIA MasterSpec-based document is protected by U.S. Copyright Law and International Treaties. It was created by "Michael Shilale Architects, LLP" for "Renovation of Rockland Green Administrative Headquarters and Construction of an Immersive Theatre Experience". A valid, current MasterSpec license is required for editing and use of this document for any other project.(22360)

C. Samples for Initial Selection:

1. Clay face brick , in the form of straps of five or more bricks.
2. Colored mortar.
3. Weep/cavity vents.

D. Samples for Verification: For each type and color of the following:

1. Exposed CMUs.
2. Clay face brick , in the form of straps of five or more bricks.
3. Pigmented mortar. Make Samples using same sand and mortar ingredients to be used on Project.
4. Weep/cavity vents.
5. Cavity drainage material.
6. Accessories embedded in masonry.

1.5 INFORMATIONAL SUBMITTALS

A. Mix Designs: For each type of mortar and grout. Include description of type and proportions of ingredients.

1. Include test reports for mortar mixes required to comply with property specification. Test in accordance with ASTM C109/C109M for compressive strength, ASTM C1506 for water retention, and ASTM C91/C91M for air content.
2. Include test reports, in accordance with ASTM C1019, for grout mixes required to comply with compressive strength requirement.

B. Cold-Weather and Hot-Weather Procedures: Detailed description of methods, materials, and equipment to be used to comply with requirements.

1.6 QUALITY ASSURANCE

A. Qualifications:

1. Installers: All masonry flashing installers must complete the International Masonry Institute Flashing Upgrade training course.

1.7 MOCKUPS

A. Wall Mockups: Build mockups to verify selections made under Sample submittals to demonstrate aesthetic effects and to set quality standards for installation .

1. Build mockup at a location onsite, specific area to be selected by owner and archited. o .
2. Build mockups for typical exterior wall in sizes approximately 48 inches long by 60 inches high by full thickness, including face and backup wythes and accessories.
   a. Include a sealant-filled joint at least 16 inches long in exterior wall mockup.

Copyright © 2025 by the American Institute of Architects. Warning: This AIA MasterSpec-based document is protected by U.S. Copyright Law and International Treaties. It was created by "Michael Shilale Architects, LLP" for "Renovation of Rockland Green Administrative Headquarters and Construction of an Immersive Theatre Experience". A valid, current MasterSpec license is required for editing and use of this document for any other project.(22360)

b. Include through-wall flashing installed for a 24-inch length in corner of exterior wall mockup approximately 16 inches down from top of mockup, with a 12-inch length of flashing left exposed to view (omit masonry above half of flashing).
c. Include metal studs, sheathing, water-resistive barrier sheathing joint-and-penetration treatment air barrier, veneer anchors, flashing , cavity drainage material, and weep holes in exterior masonry-veneer wall mockup.
d. Include clay face brick on one face of interior unit masonry wall mockup.

3. Where masonry is to match existing, erect mockups adjacent and parallel to existing surface.
4. Clean one-half of exposed faces of mockups with masonry cleaner as indicated.
5. Protect accepted mockups from the elements with weather-resistant membrane.
6. Approval of mockups does not constitute approval of deviations from the Contract Documents contained in mockups unless Architect specifically approves such deviations by Change Order.
7. Subject to compliance with requirements, approved mockups may become part of the completed Work if undisturbed at time of Substantial Completion.

1.8 DELIVERY, STORAGE, AND HANDLING

A. Store masonry units on elevated platforms in a dry location. If units are not stored in an enclosed location, cover tops and sides of stacks with waterproof sheeting, securely tied. If units become wet, do not install until they are dry.

B. Store cementitious materials on elevated platforms, under cover, and in a dry location. Do not use cementitious materials that have become damp.

C. Store aggregates where grading and other required characteristics can be maintained and contamination avoided.

D. Deliver preblended, dry mortar mix in moisture-resistant containers. Store preblended, dry mortar mix in delivery containers on elevated platforms in a dry location or in covered weatherproof dispensing silos.

E. Store masonry accessories, including metal items, to prevent corrosion and accumulation of dirt and oil.

1.9 FIELD CONDITIONS

A. Protection of Masonry: During construction, cover tops of walls, projections, and sills with waterproof sheeting at end of each day's work. Cover partially completed masonry when construction is not in progress.

1. Extend cover a minimum of 24 inches down both sides of walls, and hold cover securely in place.
2. Where one wythe of multiwythe masonry walls is completed in advance of other wythes, secure cover a minimum of 24 inches down face next to unconstructed wythe, and hold cover in place.

Copyright © 2025 by the American Institute of Architects. Warning: This AIA MasterSpec-based document is protected by U.S. Copyright Law and International Treaties. It was created by "Michael Shilale Architects, LLP" for "Renovation of Rockland Green Administrative Headquarters and Construction of an Immersive Theatre Experience". A valid, current MasterSpec license is required for editing and use of this document for any other project.(22360)

B. Do not apply uniform floor or roof loads for at least 12 hours and concentrated loads for at least three days after building masonry walls or columns.

C. Stain Prevention: Prevent grout, mortar, and soil from staining the face of masonry to be left exposed or painted. Immediately remove grout, mortar, and soil that come in contact with such masonry.

1. Protect base of walls from rain-splashed mud and from mortar splatter by spreading coverings on ground and over wall surface.
2. Protect sills, ledges, and projections from mortar droppings.
3. Protect surfaces of window and door frames, as well as similar products with painted and integral finishes, from mortar droppings.
4. Turn scaffold boards near the wall on edge at the end of each day to prevent rain from splashing mortar and dirt onto completed masonry.

D. Cold-Weather Requirements: Do not use frozen materials or materials mixed or coated with ice or frost. Do not build on frozen substrates. Remove and replace unit masonry damaged by frost or by freezing conditions. Comply with cold-weather construction requirements contained in TMS 602.

1. Cold-Weather Cleaning: Use liquid cleaning methods only when air temperature is 40 deg F and higher and will remain so until masonry has dried, but not less than seven days after completing cleaning.

E. Hot-Weather Requirements: Comply with hot-weather construction requirements contained in TMS 602.

PART 2 - PRODUCTS

2.1 SOURCE LIMITATIONS

A. Obtain exposed masonry units cementitious mortar components and mortar aggregate from single producer or manufacturer.

B. For exposed masonry units and cementitious mortar components, obtain each color and grade from single source with resources to provide materials of consistent quality in appearance and physical properties.

2.2 PERFORMANCE REQUIREMENTS

A. Provide unit masonry that develops indicated net-area compressive strengths at 28 days.

1. Determine net-area compressive strength of masonry by testing masonry prisms in accordance with ASTM C1314.

Copyright © 2025 by the American Institute of Architects. Warning: This AIA MasterSpec-based document is protected by U.S. Copyright Law and International Treaties. It was created by "Michael Shilale Architects, LLP" for "Renovation of Rockland Green Administrative Headquarters and Construction of an Immersive Theatre Experience". A valid, current MasterSpec license is required for editing and use of this document for any other project.(22360)

2.3 UNIT MASONRY, GENERAL

A. Masonry Standard: Comply with TMS 602, except as modified by requirements in the Contract Documents.

B. Defective Units: Referenced masonry unit standards may allow a certain percentage of units to contain chips, cracks, or other defects exceeding limits stated. Do not use units where such defects are exposed in the completed Work and will be within 20 ft. vertically and horizontally of a walking surface.

C. Fire-Resistance Ratings: Comply with requirements for fire-resistance-rated assembly designs indicated.

1. Where fire-resistance-rated construction is indicated, use the equivalent thickness method for masonry units in accordance with ACI 216.1 .

2.4 CONCRETE MASONRY UNITS

A. Shapes: Provide shapes indicated and as follows, with exposed surfaces matching exposed faces of adjacent units unless otherwise indicated.

1. Provide special shapes for lintels, corners, jambs, sashes, movement joints, headers, bonding, and other special conditions.
2. Provide square-edged units for outside corners unless otherwise indicated.

B. Integral Water Repellent: Provide units made with integral water repellent for exposed units .

1. Integral Water Repellent: Liquid polymeric, integral water-repellent admixture that does not reduce flexural bond strength. Units made with integral water repellent, when tested in accordance with ASTM E514/E514M as a wall assembly made with mortar containing integral water-repellent manufacturer's mortar additive, with test period extended to 24 hours, will show no visible water or leaks on the back of test specimen.

C. CMUs: ASTM C90, normal weight .

1. Unit Compressive Strength: Provide units with minimum average net-area compressive strength of 2800 psi .
2. Size (Width): Manufactured to dimensions 3/8 inch less than nominal dimensions.
3. Exposed Faces: Provide color and texture matching the range represented by Architect's sample.
4. Faces to Receive Plaster: Where units are indicated to receive a direct application of plaster, provide textured-face units made with gap-graded aggregates.

D. Concrete Building Brick: ASTM C55, medium weight .

1. Unit Compressive Strength: Provide units with minimum average net-area compressive strength of 3750 psi .

E. Concrete Face Brick: ASTM C1634, normal weight .

Copyright © 2025 by the American Institute of Architects. Warning: This AIA MasterSpec-based document is protected by U.S. Copyright Law and International Treaties. It was created by "Michael Shilale Architects, LLP" for "Renovation of Rockland Green Administrative Headquarters and Construction of an Immersive Theatre Experience". A valid, current MasterSpec license is required for editing and use of this document for any other project.(22360)

1. Unit Compressive Strength: Provide units with minimum average net-area compressive strength of 3750 psi .
2. Size (Actual Dimensions): 3-5/8 inches wide by high by 7-5/8 inches long.
3. Colors: As selected by Architect from manufacturer's full range.
4. Special Aggregate: Provide units made with aggregate matching aggregate in Architect's sample.

2.5 BRICK

A. General: Provide shapes indicated and as follows, with exposed surfaces matching finish and color of exposed faces of adjacent units:

1. For ends of sills and caps and for similar applications that would otherwise expose unfinished brick surfaces, provide units without cores or frogs and with exposed surfaces finished.
2. Provide special shapes for applications requiring brick of size, form, color, and texture on exposed surfaces that cannot be produced by sawing .

B. Clay Face Brick: Facing brick complying with ASTM C216 , Grade MW or Grade SW , .

1. Unit Compressive Strength: Provide units with minimum average net-area compressive strength of 4950 psi .
2. Initial Rate of Absorption: Less than 30 g/30 sq. in. per minute when tested in accordance with ASTM C67/C67M.
3. Efflorescence: Provide brick that has been tested in accordance with ASTM C67/C67M and is rated "not effloresced."
4. Surface Coating: Brick with colors or textures produced by application of coatings withstand 50 cycles of freezing and thawing in accordance with ASTM C67/C67M with no observable difference in the applied finish when viewed from 10 ft. or have a history of successful use in Project's area.
5. Size (Actual Dimensions): 3-5/8 inches wide by 2-5/8 inches 7-5/8 inches high by 7-5/8 inches long.
6. Application: Use where brick is exposed unless otherwise indicated.
7. Where shown to "match existing," provide face brick matching color range, texture, and size of existing adjacent brickwork.
8. Color and Texture: Match Architect's samples .

C. Building (Common) Brick: ASTM C62, Grade MW or Grade SW .

1. Unit Compressive Strength: Provide units with minimum average net-area compressive strength of 4950 psi .
2. Size (Actual Dimensions): 3-1/2 inches wide by 2-1/4 inches high by 7-1/2 inches long .
3. Application: Use where brick is indicated for concealed locations. Face brick complying with requirements for grade, compressive strength, and size indicated for building brick may be substituted for building brick.

Copyright © 2025 by the American Institute of Architects. Warning: This AIA MasterSpec-based document is protected by U.S. Copyright Law and International Treaties. It was created by "Michael Shilale Architects, LLP" for "Renovation of Rockland Green Administrative Headquarters and Construction of an Immersive Theatre Experience". A valid, current MasterSpec license is required for editing and use of this document for any other project.(22360)

2.6 MORTAR AND GROUT MATERIALS

A. Portland Cement: ASTM C150/C150M, Type I or II, except Type III may be used for cold-weather construction. Provide natural color or white cement as required to produce mortar color indicated.

1. Alkali content will not be more than 0.1 percent when tested in accordance with ASTM C114.

B. Hydrated Lime: ASTM C207, Type S.

C. Mortar Cement: ASTM C1329/C1329M.

D. Mortar Pigments: Natural and synthetic iron oxides and chromium oxides, compounded for use in mortar mixes and complying with ASTM C979/C979M. Use only pigments with a record of satisfactory performance in masonry mortar.

1. Manufacturers: Subject to compliance with requirements, provide products by one of the following:
   a. Davis Colors.
   b. Euclid Chemical Company (The); a subsidiary of RPM International, Inc.
   c. Solomon Colors Inc.

E. Water: Potable.

2.7 REINFORCEMENT

A. Uncoated-Steel Reinforcing Bars: ASTM A615/A615M or ASTM A996/A996M, Grade 60.

B. Reinforcing Bar Positioners: Wire units designed to fit into mortar bed joints spanning masonry unit cells and to hold reinforcing bars in center of cells. Units are formed from 0.148-inch steel wire, hot-dip galvanized after fabrication. Provide units designed for number of bars indicated.

C. Masonry-Joint Reinforcement, General: ASTM A951/A951M.

1. Interior Walls: Hot-dip galvanized carbon steel.
2. Exterior Walls: Hot-dip galvanized carbon steel.
3. Wire Size for Side Rods: 0.187-inch diameter.
4. Wire Size for Cross Rods: 0.187-inch diameter.
5. Wire Size for Veneer Ties: 0.187-inch diameter.
6. Spacing of Cross Rods, Tabs, and Cross Ties: Not more than 16 inches o.c.
7. Provide in lengths of not less than 10 ft..

D. Masonry-Joint Reinforcement for Single-Wythe Masonry: Ladder or truss type with single pair of side rods.

E. Masonry-Joint Reinforcement for Veneers Anchored with Seismic Masonry-Veneer Anchors: Single 0.187-inch- diameter, hot-dip galvanized carbon steel continuous wire.

Copyright © 2025 by the American Institute of Architects. Warning: This AIA MasterSpec-based document is protected by U.S. Copyright Law and International Treaties. It was created by "Michael Shilale Architects, LLP" for "Renovation of Rockland Green Administrative Headquarters and Construction of an Immersive Theatre Experience". A valid, current MasterSpec license is required for editing and use of this document for any other project.(22360)

2.8 TIES AND ANCHORS

A. General: Ties and anchors extend at least 1-1/2 inches into veneer but with at least a 5/8-inch cover on outside face.

B. Materials: Provide ties and anchors specified in this article that are made from materials that comply with the following unless otherwise indicated:

1. Stainless Steel Wire: ASTM A580/A580M, Type 304 .
2. Galvanized-Steel Sheet: ASTM A653/A653M, Commercial Steel, G60 zinc coating.
3. Steel Sheet, Galvanized after Fabrication: ASTM A1008/A1008M, Commercial Steel, with ASTM A153/A153M, Class B coating.
4. Stainless Steel Sheet: ASTM A240/A240M or ASTM A666, Type 304 .
5. Steel Plates, Shapes, and Bars: ASTM A36/A36M.
6. Stainless Steel Bars: ASTM A276 or ASTM A666, Type 304.

C. Individual Wire Ties: Rectangular units with closed ends and not less than 4 inches wide.

1. Z-shaped ties with ends bent 90 degrees to provide hooks not less than 2 inches long for masonry constructed from solid units.
2. Where wythes do not align , use adjustable ties with pintle-and-eye connections having a maximum adjustment of 1-1/4 inches.
3. Wire: Fabricate from 1/4-inch- diameter, stainless steel wire.

D. Adjustable Anchors for Connecting to Structural Steel Framing: Provide anchors that allow vertical or horizontal adjustment but resist tension and compression forces perpendicular to plane of wall.

1. Anchor Section for Welding to Steel Frame: Crimped 1/4-inch- diameter, stainless steel wire. Mill-galvanized wire may be used at interior walls unless otherwise indicated.
2. Tie Section: Triangular-shaped wire tie made from 0.25-inch- diameter, stainless steel wire.

E. Adjustable Anchors for Connecting to Concrete: Provide anchors that allow vertical or horizontal adjustment but resist tension and compression forces perpendicular to plane of wall.

1. Tie Section: Triangular-shaped wire tie made from 0.25-inch- diameter, stainless steel wire.
2. Corrugated-Metal Ties: Metal strips not less than 7/8 inch wide with corrugations having a wavelength of 0.3 to 0.5 inch and an amplitude of 0.06 to 0.10 inch made from 0.0781-inch- thick, stainless steel sheet with channel tabs for inserting into slots in concrete.

F. Partition Top Anchors: 0.105-inch- thick metal plate with a 3/8-inch- diameter metal rod 6 inches long welded to plate and with closed-end plastic tube fitted over rod that allows rod to move in and out of tube. Fabricate from steel, hot-dip galvanized after fabrication .

G. Rigid Anchors: Fabricate from steel bars 1-1/2 inches wide by 1/4 inch thick by 24 inches long, with ends turned up 2 inches or with cross pins unless otherwise indicated .

1. Corrosion Protection: Hot-dip galvanized to comply with ASTM A153/A153M .

Copyright © 2025 by the American Institute of Architects. Warning: This AIA MasterSpec-based document is protected by U.S. Copyright Law and International Treaties. It was created by "Michael Shilale Architects, LLP" for "Renovation of Rockland Green Administrative Headquarters and Construction of an Immersive Theatre Experience". A valid, current MasterSpec license is required for editing and use of this document for any other project.(22360)

H. Adjustable Masonry-Veneer Anchors:

1. General: Provide anchors that allow vertical adjustment but resist a 100 lbf load in both tension and compression perpendicular to plane of wall without deforming or developing play in excess of 1/16 inch.
2. Fabricate wire ties from 0.25-inch- diameter, stainless steel wire unless otherwise indicated.
3. Contractor's Option: Unless otherwise indicated, provide any of the adjustable masonry-veneer anchors specified.
4. Masonry-Veneer Anchors; Slotted Plate with Prongs: Sheet metal anchor section, with screw holes at top and bottom; top and bottom ends bent to form pronged legs of length to match thickness of insulation; and raised rib-stiffened strap, stamped into center to provide a slot between strap and base for wire tie. Use self-adhering tape to seal penetration behind anchor plate.
5. Masonry-Veneer Anchors; Single-Barrel Screw: Self-drilling, single-barrel screw designed to receive wire tie. Screw has a smooth barrel the same thickness as insulation with factory-installed gasketed washer to seal at face of insulation and sheathing .
6. Polymer-Coated, Steel Drill Screws for Steel Studs: ASTM C954 except manufactured with hex washer head and neoprene or EPDM washer, No. 10 diameter by length required to penetrate steel stud flange with not less than three exposed threads, and with organic polymer coating with salt-spray resistance to red rust of more than 800 hours in accordance with ASTM B117.
7. Stainless Steel Drill Screws for Steel Studs: ASTM C954 except manufactured with hex washer head and neoprene or EPDM washer, No. 10 diameter by length required to penetrate steel stud flange with not less than three exposed threads; either made from Type 410 stainless steel or made with a carbon-steel drill point and 300 Series stainless steel shank.

2.9 EMBEDDED FLASHING

A. Metal Flashing: Provide metal flashing complying with SMACNA's "Architectural Sheet Metal Manual" and as follows:

1. Stainless Steel: ASTM A240/A240M or ASTM A666, Type 304 , 0.016 inch thick.
2. Fabricate continuous flashings in sections 96 inches long minimum, but not exceeding 12 ft.. Provide splice plates at joints of formed, smooth metal flashing.
3. Fabricate through-wall flashing with drip edge unless otherwise indicated. Fabricate by extending flashing 1/2 inch out from wall, with outer edge bent down 30 degrees and hemmed.
4. Fabricate through-wall flashing with sealant stop unless otherwise indicated. Fabricate by bending metal back on itself 3/4 inch at exterior face of wall and down into joint 1/4 inch to form a stop for retaining sealant backer rod.
5. Fabricate metal drip edges and sealant stops for sawtooth metal flashing from plain metal flashing of same metal as sawtooth flashing and extending at least 3 inches into wall with hemmed inner edge to receive sawtooth flashing and form a hooked seam. Form hem on upper surface of metal so that completed seam sheds water.
6. Solder metal items at corners.

Copyright © 2025 by the American Institute of Architects. Warning: This AIA MasterSpec-based document is protected by U.S. Copyright Law and International Treaties. It was created by "Michael Shilale Architects, LLP" for "Renovation of Rockland Green Administrative Headquarters and Construction of an Immersive Theatre Experience". A valid, current MasterSpec license is required for editing and use of this document for any other project.(22360)

B. Drainage Plane Flashing: Fabricate from stainless steel copper and drainage membrane to shapes indicated , including weep tabs, termination bar, and drip edge. Provide flashing materials as follows:

1. Stainless Steel: ASTM A240/A240M or ASTM A666, Type 304 , 0.016 inch thick.
2. Copper: 5 oz./sq. ft. thick.
3. Fabricate continuous flashings in sections 60 inches long, minimum.
4. Accessories: Provide preformed corners, end dams, other special shapes, and seaming materials produced by flashing manufacturer.

C. Adhesives, Primers, and Seam Tapes for Flashings: Flashing manufacturer's standard products or products recommended by flashing manufacturer for bonding flashing sheets to each other and to substrates.

2.10 MORTAR AND GROUT MIXES

A. General: Do not use admixtures, including pigments, air-entraining agents, accelerators, retarders, water-repellent agents, antifreeze compounds, or other admixtures unless otherwise indicated.

1. Do not use calcium chloride in mortar or grout.
2. Use portland cement-lime mortar unless otherwise indicated.
3. For exterior masonry, use portland cement-lime mortar.
4. For reinforced masonry, use portland cement-lime mortar.
5. Add cold-weather admixture (if used) at same rate for all mortar that will be exposed to view, regardless of weather conditions, to ensure that mortar color is consistent.

B. Preblended, Dry Mortar Mix: Furnish dry mortar ingredients in form of a preblended mix. Measure quantities by weight to ensure accurate proportions, and thoroughly blend ingredients before delivering to Project site.

C. Pigmented Mortar: Use colored cement product or select and proportion pigments with other ingredients to produce color required. Do not add pigments to colored cement products.

1. Pigments do not exceed 10 percent of portland cement by weight.
2. Pigments do not exceed 5 percent of masonry cement by weight.
3. Mix to match Architect's sample.

D. Colored-Aggregate Mortar: Produce required mortar color by using colored aggregates and natural color or white cement as necessary to produce required mortar color.

1. Mix to match Architect's sample.

E. Grout for Unit Masonry: Comply with ASTM C476.

1. Use grout of type indicated or, if not otherwise indicated, of type (fine or coarse) that will comply with TMS 602 for dimensions of grout spaces and pour height.
2. Proportion grout in accordance with ASTM C476, Table 1 or paragraph 4.2.1.2 for specified 28-day compressive strength indicated, but not less than 2000 psi.

Copyright © 2025 by the American Institute of Architects. Warning: This AIA MasterSpec-based document is protected by U.S. Copyright Law and International Treaties. It was created by "Michael Shilale Architects, LLP" for "Renovation of Rockland Green Administrative Headquarters and Construction of an Immersive Theatre Experience". A valid, current MasterSpec license is required for editing and use of this document for any other project.(22360)

3. Provide grout with a slump of 10 to 11 inches as measured in accordance with ASTM C143/C143M.

PART 3 - EXECUTION

3.1 EXAMINATION

A. Examine conditions, with Installer present, for compliance with requirements for installation tolerances and other conditions affecting performance of the Work.

1. For the record, prepare written report, endorsed by Installer, listing conditions detrimental to performance of the Work.
2. Verify that foundations are within tolerances specified.
3. Verify that reinforcing dowels are properly placed.
4. Verify that substrates are free of substances that impair mortar bond.

B. Before installation, examine rough-in and built-in construction for piping systems to verify actual locations of piping connections.

C. Proceed with installation only after unsatisfactory conditions have been corrected.

3.2 INSTALLATION, GENERAL

A. Thickness: Build cavity and composite walls and other masonry construction to full thickness shown. Build single-wythe walls to actual widths of masonry units, using units of widths indicated.

B. Build chases and recesses to accommodate items specified in this and other Sections.

C. Leave openings for equipment to be installed before completing masonry. After installing equipment, complete masonry to match construction immediately adjacent to opening.

D. Use full-size units without cutting if possible. If cutting is required to provide a continuous pattern or to fit adjoining construction, cut units with motor-driven saws; provide clean, sharp, unchipped edges. Allow units to dry before laying unless wetting of units is specified. Install cut units with cut surfaces and, where possible, cut edges concealed.

E. Select and arrange units for exposed unit masonry to produce a uniform blend of colors and textures. Mix units from several pallets or cubes as they are placed.

F. Matching Existing Masonry: Match coursing, bonding, color, and texture of existing masonry.

G. Wetting of Brick: Wet brick before laying if initial rate of absorption exceeds 30 g/30 sq. in. per minute when tested in accordance with ASTM C67/C67M. Allow units to absorb water so they are damp but not wet at time of laying.

Copyright © 2025 by the American Institute of Architects. Warning: This AIA MasterSpec-based document is protected by U.S. Copyright Law and International Treaties. It was created by "Michael Shilale Architects, LLP" for "Renovation of Rockland Green Administrative Headquarters and Construction of an Immersive Theatre Experience". A valid, current MasterSpec license is required for editing and use of this document for any other project.(22360)

3.3 TOLERANCES

A. Dimensions and Locations of Elements:

1. For dimensions in cross section or elevation, do not vary by more than plus 1/2 inch or minus 1/4 inch.
2. For location of elements in plan, do not vary from that indicated by more than plus or minus 1/2 inch.
3. For location of elements in elevation, do not vary from that indicated by more than plus or minus 1/4 inch in a story height or 1/2 inch total.

B. Lines and Levels:

1. For bed joints and top surfaces of bearing walls, do not vary from level by more than 1/4 inch in 10 ft., or 1/2-inch maximum.
2. For conspicuous horizontal lines, such as lintels, sills, parapets, and reveals, do not vary from level by more than 1/8 inch in 10 ft., 1/4 inch in 20 ft., or 1/2-inch maximum.
3. For vertical lines and surfaces, do not vary from plumb by more than 1/4 inch in 10 ft., 3/8 inch in 20 ft., or 1/2-inch maximum.
4. For conspicuous vertical lines, such as external corners, door jambs, reveals, and expansion and control joints, do not vary from plumb by more than 1/8 inch in 10 ft., 1/4 inch in 20 ft., or 1/2-inch maximum.
5. For lines and surfaces, do not vary from straight by more than 1/4 inch in 10 ft., 3/8 inch in 20 ft., or 1/2-inch maximum.
6. For vertical alignment of exposed head joints, do not vary from plumb by more than 1/4 inch in 10 ft., or 1/2-inch maximum.
7. For faces of adjacent exposed masonry units, do not vary from flush alignment by more than 1/16 inch except due to warpage of masonry units within tolerances specified for warpage of units.

C. Joints:

1. For bed joints, do not vary from thickness indicated by more than plus or minus 1/8 inch, with a maximum thickness limited to 1/2 inch.
2. For exposed bed joints, do not vary from bed-joint thickness of adjacent courses by more than 1/8 inch.
3. For head and collar joints, do not vary from thickness indicated by more than plus 3/8 inch or minus 1/4 inch.
4. For exposed head joints, do not vary from thickness indicated by more than plus or minus 1/8 inch. Do not vary from adjacent bed-joint and head-joint thicknesses by more than 1/8 inch .
5. For exposed bed joints and head joints of stacked bond, do not vary from a straight line by more than 1/16 inch from one masonry unit to the next.

3.4 LAYING MASONRY WALLS

A. Lay out walls in advance for accurate spacing of surface bond patterns with uniform joint thicknesses and for accurate location of openings, movement-type joints, returns, and offsets.

Copyright © 2025 by the American Institute of Architects. Warning: This AIA MasterSpec-based document is protected by U.S. Copyright Law and International Treaties. It was created by "Michael Shilale Architects, LLP" for "Renovation of Rockland Green Administrative Headquarters and Construction of an Immersive Theatre Experience". A valid, current MasterSpec license is required for editing and use of this document for any other project.(22360)

Avoid using less-than-half-size units, particularly at corners, jambs, and, where possible, at other locations.

B. Bond Pattern for Exposed Masonry: Unless otherwise indicated, lay exposed masonry in running bond ; do not use units with less-than-nominal 4-inch horizontal face dimensions at corners or jambs.

C. Lay concealed masonry with all units in a wythe in running bond or bonded by lapping not less than 2 inches . Bond and interlock each course of each wythe at corners. Do not use units with less-than-nominal 4-inch horizontal face dimensions at corners or jambs.

D. Stopping and Resuming Work: Stop work by stepping back units in each course from those in course below; do not tooth. When resuming work, clean masonry surfaces that are to receive mortar, remove loose masonry units and mortar, and wet brick if required before laying fresh masonry.

E. Built-in Work: As construction progresses, build in items specified in this and other Sections. Fill in solidly with masonry around built-in items.

F. Fill space between steel frames and masonry solidly with mortar unless otherwise indicated.

G. Where built-in items are to be embedded in cores of hollow masonry units, place a layer of metal lath, wire mesh, or plastic mesh in the joint below, and rod mortar or grout into core.

H. Fill cores in hollow CMUs with grout 24 inches under bearing plates, beams, lintels, posts, and similar items unless otherwise indicated.

I. Build nonload-bearing interior partitions full height of story to underside of solid floor or roof structure above unless otherwise indicated.

1. Install compressible filler in joint between top of partition and underside of structure above.
2. Fasten partition top anchors to structure above and build into top of partition. Grout cells of CMUs solidly around plastic tubes of anchors, and push tubes down into grout to provide 1/2-inch clearance between end of anchor rod and end of tube. Space anchors 48 inches o.c. unless otherwise indicated.
3. Wedge nonload-bearing partitions against structure above with small pieces of tile, slate, or metal. Fill joint with mortar after dead-load deflection of structure above approaches final position.
4. At fire-rated partitions, treat joint between top of partition and underside of structure above to comply with Section 078443 "Joint Firestopping."

3.5 MORTAR BEDDING AND JOINTING

A. Lay CMUs and hollow brick as follows:

1. Bed face shells in mortar and make head joints of depth equal to bed joints.
2. Bed webs in mortar in all courses of piers, columns, and pilasters.
3. Bed webs in mortar in grouted masonry, including starting course on footings.

Copyright © 2025 by the American Institute of Architects. Warning: This AIA MasterSpec-based document is protected by U.S. Copyright Law and International Treaties. It was created by "Michael Shilale Architects, LLP" for "Renovation of Rockland Green Administrative Headquarters and Construction of an Immersive Theatre Experience". A valid, current MasterSpec license is required for editing and use of this document for any other project.(22360)

4. Fully bed entire units, including areas under cells, at starting course on footings where cells are not grouted.
5. Fully bed units and fill cells with mortar at anchors and ties as needed to fully embed anchors and ties in mortar.

B. Tool exposed joints slightly concave when thumbprint hard, using a jointer larger than joint thickness unless otherwise indicated.

C. Cut joints flush for masonry walls to receive plaster or other direct-applied finishes (other than paint) unless otherwise indicated.

D. Cut joints flush where indicated to receive cavity wall insulation air barriers unless otherwise indicated.

3.6 COMPOSITE MASONRY

A. Bond wythes of composite masonry together using one of the following methods :

1. Individual Metal Ties: Provide ties as indicated installed in horizontal joints, but not less than one metal tie for 1.77 sq. ft. of wall area spaced not to exceed 16 inches o.c. horizontally and 16 inches o.c. vertically. Stagger ties in alternate courses. Provide additional ties within 12 inches of openings and space not more than 36 inches apart around perimeter of openings. At intersecting and abutting walls, provide ties at no more than 24 inches o.c. vertically.
   a. Where bed joints of wythes do not align, use adjustable-type (two-piece-type) ties.
2. Masonry-Joint Reinforcement: Installed in horizontal mortar joints.
   a. Where bed joints of both wythes align, use ladder-type reinforcement extending across both wythes .
   b. Where bed joints of wythes do not align, use adjustable-type (two-piece-type) reinforcement with continuous horizontal wire in facing wythe attached to ties.
3. Header Bonding: Provide masonry unit headers extending not less than 3 inches into each wythe. Space headers not more than 8 inches clear horizontally and 16 inches clear vertically.

B. Bond wythes of composite masonry together using bonding system indicated on Drawings.

C. Corners: Provide interlocking masonry unit bond in each wythe and course at corners unless otherwise indicated.

1. Provide continuity with masonry-joint reinforcement at corners by using prefabricated L-shaped units as well as masonry bonding.

D. Intersecting and Abutting Walls: Unless vertical expansion or control joints are indicated at juncture, bond walls together as follows:

1. Provide individual metal ties not more than 8 inches o.c.
2. Provide continuity with masonry-joint reinforcement by using prefabricated T-shaped units.

Copyright © 2025 by the American Institute of Architects. Warning: This AIA MasterSpec-based document is protected by U.S. Copyright Law and International Treaties. It was created by "Michael Shilale Architects, LLP" for "Renovation of Rockland Green Administrative Headquarters and Construction of an Immersive Theatre Experience". A valid, current MasterSpec license is required for editing and use of this document for any other project.(22360)

3. Provide rigid metal anchors not more than 24 inches o.c. If used with hollow masonry units, embed ends in mortar-filled cores.

3.7 CAVITY WALLS

A. Bond wythes of cavity walls together using one of the following methods :

1. Individual Metal Ties: Provide ties as indicated installed in horizontal joints, but not less than one metal tie for 1.77 sq. ft. of wall area spaced not to exceed 16 inches o.c. horizontally and 16 inches o.c. vertically. Stagger ties in alternate courses. Provide additional ties within 12 inches of openings and space not more than 36 inches apart around perimeter of openings. At intersecting and abutting walls, provide ties at no more than 24 inches o.c. vertically.
   a. Where bed joints of wythes do not align, use adjustable-type (two-piece-type) ties.
   b. Where one wythe is of clay masonry and the other of concrete masonry, use adjustable-type (two-piece-type) ties to allow for differential movement regardless of whether bed joints align.
2. Masonry-Joint Reinforcement: Installed in horizontal mortar joints.
   a. Where bed joints of both wythes align, use ladder-type reinforcement extending across both wythes .
   b. Where bed joints of wythes do not align, use adjustable-type (two-piece-type) reinforcement with continuous horizontal wire in facing wythe attached to ties.
   c. Where one wythe is of clay masonry and the other of concrete masonry, use adjustable-type (two-piece-type) reinforcement with continuous horizontal wire in facing wythe attached to ties to allow for differential movement regardless of whether bed joints align.
3. Header Bonding: Provide masonry unit headers extending not less than 3 inches into each wythe. Space headers not more than 8 inches clear horizontally and 16 inches clear vertically.
4. Masonry-Veneer Anchors: Comply with requirements for anchoring masonry veneers.

B. Bond wythes of cavity walls together using bonding system indicated on Drawings.

C. Keep cavities clean of mortar droppings and other materials during construction. Bevel beds away from cavity, to minimize mortar protrusions into cavity. Do not attempt to trowel or remove mortar fins protruding into cavity.

D. Parge cavity face of backup wythe in a single coat approximately 3/8 inch thick. Trowel face of parge coat smooth.

E. Installing Cavity Wall Insulation: Place small dabs of adhesive, spaced approximately 12 inches o.c. both ways, on inside face of insulation boards, or attach with plastic fasteners designed for this purpose. Fit courses of insulation between wall ties and other confining obstructions in cavity, with edges butted tightly both ways. Press units firmly against inside wythe of masonry or other construction as indicated.

1. Fill cracks and open gaps in insulation with crack sealer compatible with insulation and masonry.

Copyright © 2025 by the American Institute of Architects. Warning: This AIA MasterSpec-based document is protected by U.S. Copyright Law and International Treaties. It was created by "Michael Shilale Architects, LLP" for "Renovation of Rockland Green Administrative Headquarters and Construction of an Immersive Theatre Experience". A valid, current MasterSpec license is required for editing and use of this document for any other project.(22360)

3.8 CONTROL AND EXPANSION JOINTS

A. General: Install control- and expansion-joint materials in unit masonry as masonry progresses. Do not allow materials to span control and expansion joints without provision to allow for in-plane wall or partition movement.

B. Form control joints in concrete masonry using one of the following methods:

1. Fit bond-breaker strips into hollow contour in ends of CMUs on one side of control joint. Fill resultant core with grout, and rake out joints in exposed faces for application of sealant.
2. Install preformed control-joint gaskets designed to fit standard sash block.
3. Install interlocking units designed for control joints. Install bond-breaker strips at joint. Keep head joints free and clear of mortar, or rake out joint for application of sealant.
4. Install temporary foam-plastic filler in head joints, and remove filler when unit masonry is complete for application of sealant.

C. Form expansion joints in brick as follows:

1. Build flanges of metal expansion strips into masonry. Lap each joint 4 inches in direction of water flow. Seal joints below grade and at junctures with horizontal expansion joints if any.
2. Build flanges of factory-fabricated, expansion-joint units into masonry.
3. Build in compressible joint fillers where indicated.
4. Form open joint full depth of brick wythe and of width indicated, but not less than 1/2 inch for installation of sealant and backer rod specified in Section 079200 "Joint Sealants."

D. Provide horizontal, pressure-relieving joints by either leaving an airspace or inserting a compressible filler of width required for installing sealant and backer rod specified in Section 079200 "Joint Sealants," but not less than 3/8 inch .

1. Locate horizontal, pressure-relieving joints beneath shelf angles supporting masonry.

3.9 FLASHING, WEEP HOLES, AND CAVITY VENTS

A. General: Install embedded flashing and weep holes in masonry at shelf angles, lintels, ledges, other obstructions to downward flow of water in wall, and where indicated. Install cavity vents at shelf angles, ledges, and other obstructions to upward flow of air in cavities, and where indicated.

B. Install flashing as follows unless otherwise indicated:

1. Prepare masonry surfaces so they are smooth and free from projections that could puncture flashing. Where flashing is within mortar joint, place through-wall flashing on sloping bed of mortar and cover with mortar. Before covering with mortar, seal penetrations in flashing with adhesive, sealant, or tape as recommended by flashing manufacturer.

Copyright © 2025 by the American Institute of Architects. Warning: This AIA MasterSpec-based document is protected by U.S. Copyright Law and International Treaties. It was created by "Michael Shilale Architects, LLP" for "Renovation of Rockland Green Administrative Headquarters and Construction of an Immersive Theatre Experience". A valid, current MasterSpec license is required for editing and use of this document for any other project.(22360)

2. At masonry-veneer walls, extend flashing through veneer, across airspace behind veneer, and up face of sheathing at least 8 inches; with upper edge tucked under water-resistive barrier , lapping at least 4 inches. Fasten upper edge of flexible flashing to sheathing through termination bar.
3. At lintels and shelf angles, extend flashing 6 inches minimum , to edge of next full unit at each end. At heads and sills, extend flashing 6 inches minimum , to edge of next full unit and turn ends up not less than 2 inches to form end dams.
4. Interlock end joints of sawtooth sheet metal flashing by overlapping ribs not less than 1-1/2 inches or as recommended by flashing manufacturer, and seal lap with elastomeric sealant complying with requirements in Section 079200 "Joint Sealants" for application indicated.
5. Install metal drip edges and sealant stops with sawtooth sheet metal flashing by interlocking hemmed edges to form hooked seam. Seal seam with elastomeric sealant complying with requirements in Section 079200 "Joint Sealants" for application indicated.
6. Install metal drip edges beneath flexible flashing at exterior face of wall. Stop flexible flashing 1/2 inch back from outside face of wall, and adhere flexible flashing to top of metal drip edge.
7. Install metal flashing termination beneath flexible flashing at exterior face of wall. Stop flexible flashing 1/2 inch back from outside face of wall, and adhere flexible flashing to top of metal flashing termination.
8. Cut flexible flashing off flush with face of wall after masonry wall construction is completed.

C. Install single-wythe CMU flashing system in bed joints of CMU walls where indicated to comply with manufacturer's written instructions. Install CMU cell pans with upturned edges located below face shells and webs of CMUs above and with weep spouts aligned with face of wall. Install CMU web covers so that they cover upturned edges of CMU cell pans at CMU webs and extend from face shell to face shell.

D. Install reglets and nailers for flashing and other related construction where they are indicated to be built into masonry.

E. Install weep holes in exterior wythes and veneers in head joints of first course of masonry immediately above embedded flashing.

1. Use wicking material to form weep holes above flashing under brick sills. Turn wicking down at lip of sill to be as inconspicuous as possible.
2. Space weep holes 24 inches o.c. unless otherwise indicated.
3. Space weep holes formed from plastic tubing or wicking material 16 inches o.c.
4. Cover cavity side of weep holes with plastic insect screening at cavities insulated with loose-fill insulation.
5. Trim wicking material flush with outside face of wall after mortar has set.

F. Place pea gravel in cavities as soon as practical to a height equal to height of first course above top of flashing, but not less than 2 inches, to maintain drainage.

G. Place cavity drainage material in cavities to comply with configuration requirements for cavity drainage material in "Accessories" Article.

Copyright © 2025 by the American Institute of Architects. Warning: This AIA MasterSpec-based document is protected by U.S. Copyright Law and International Treaties. It was created by "Michael Shilale Architects, LLP" for "Renovation of Rockland Green Administrative Headquarters and Construction of an Immersive Theatre Experience". A valid, current MasterSpec license is required for editing and use of this document for any other project.(22360)

H. Install cavity vents in head joints in exterior wythes at spacing indicated. Use specified weep/cavity vent products to form cavity vents.

1. Close cavities off vertically and horizontally with blocking in manner indicated. Install through-wall flashing and weep holes above horizontal blocking.

3.10 REINFORCED UNIT MASONRY

A. Temporary Formwork and Shores: Construct formwork and shores as needed to support reinforced masonry elements during construction.

1. Construct formwork to provide shape, line, and dimensions of completed masonry as indicated. Make forms sufficiently tight to prevent leakage of mortar and grout. Brace, tie, and support forms to maintain position and shape during construction and curing of reinforced masonry.
2. Do not remove forms and shores until reinforced masonry members have hardened sufficiently to carry their own weight and that of other loads that may be placed on them during construction.

B. Placing Reinforcement: Comply with requirements in TMS 602.

C. Grouting: Do not place grout until entire height of masonry to be grouted has attained enough strength to resist grout pressure.

1. Comply with requirements in TMS 602 for cleanouts and for grout placement, including minimum grout space and maximum pour height.
2. Limit height of vertical grout pours to not more than 60 inches .

3.11 FIELD QUALITY CONTROL

A. Testing Agency: Owner will engage a qualified testing agency to perform tests and inspections. Allow inspectors access to scaffolding and work areas as needed to perform tests and inspections. Retesting of materials that fail to comply with specified requirements will be at Contractor's expense.

B. Inspections: Special inspections in accordance with Level 2 in TMS 402.

1. Begin masonry construction only after inspectors have verified proportions of site-prepared mortar.
2. Place grout only after inspectors have verified compliance of grout spaces and of grades, sizes, and locations of reinforcement.
3. Place grout only after inspectors have verified proportions of site-prepared grout.

C. Testing Prior to Construction: One set of tests.

D. Testing Frequency: One set of tests for each 5000 sq. ft. of wall area or portion thereof.

Copyright © 2025 by the American Institute of Architects. Warning: This AIA MasterSpec-based document is protected by U.S. Copyright Law and International Treaties. It was created by "Michael Shilale Architects, LLP" for "Renovation of Rockland Green Administrative Headquarters and Construction of an Immersive Theatre Experience". A valid, current MasterSpec license is required for editing and use of this document for any other project.(22360)

E. Mortar Aggregate Ratio Test (Proportion Specification): For each mix provided, in accordance with ASTM C780.

F. Mortar Test (Property Specification): For each mix provided, in accordance with ASTM C780. Test mortar for mortar air content and compressive strength.

G. Grout Test (Compressive Strength): For each mix provided, in accordance with ASTM C1019.

H. Prism Test: For each type of construction provided, in accordance with ASTM C1314 at 7 days and at 28 days.

3.12 REPAIRING, POINTING, AND CLEANING

A. Remove and replace masonry units that are loose, chipped, broken, stained, or otherwise damaged or that do not match adjoining units. Install new units to match adjoining units; install in fresh mortar, pointed to eliminate evidence of replacement.

B. Pointing: During the tooling of joints, enlarge voids and holes, except weep holes, and completely fill with mortar. Point up joints, including corners, openings, and adjacent construction, to provide a neat, uniform appearance. Prepare joints for sealant application, where indicated.

C. In-Progress Cleaning: Clean unit masonry as work progresses by dry brushing to remove mortar fins and smears before tooling joints.

D. Final Cleaning: After mortar is thoroughly set and cured, clean exposed masonry as follows:

1. Remove large mortar particles by hand with wooden paddles and nonmetallic scrape hoes or chisels.
2. Test cleaning methods on sample wall panel; leave one-half of panel uncleaned for comparison purposes. Obtain Architect's approval of sample cleaning before proceeding with cleaning of masonry.
3. Protect adjacent stone and nonmasonry surfaces from contact with cleaner by covering them with liquid strippable masking agent or polyethylene film and waterproof masking tape.
4. Wet wall surfaces with water before applying cleaners; remove cleaners promptly by rinsing surfaces thoroughly with clear water.
5. Clean brick by bucket-and-brush hand-cleaning method described in BIA Technical Notes 20.
6. Clean concrete masonry by applicable cleaning methods indicated in NCMA TEK 8-4A.
7. Clean masonry with a proprietary acidic masonry cleaner applied according to manufacturer's written instructions.

3.13 MASONRY WASTE DISPOSAL

A. Salvageable Materials: Unless otherwise indicated, excess masonry materials are Contractor's property. At completion of unit masonry work, remove from Project site.

Copyright © 2025 by the American Institute of Architects. Warning: This AIA MasterSpec-based document is protected by U.S. Copyright Law and International Treaties. It was created by "Michael Shilale Architects, LLP" for "Renovation of Rockland Green Administrative Headquarters and Construction of an Immersive Theatre Experience". A valid, current MasterSpec license is required for editing and use of this document for any other project.(22360)

B. Waste Disposal as Fill Material: Dispose of clean masonry waste, including excess or soil-contaminated sand, waste mortar, and broken masonry units, by crushing and mixing with fill material as fill is placed.

1. Crush masonry waste to less than 4 inches in each dimension.
2. Mix masonry waste with at least two parts of specified fill material for each part of masonry waste. Fill material is specified in Section 312000 "Earth Moving."
3. Do not dispose of masonry waste as fill within 18 inches of finished grade.

C. Masonry Waste Recycling: Return broken CMUs not used as fill to manufacturer for recycling.

D. Excess Masonry Waste: Remove excess clean masonry waste that cannot be used as fill, as described above or recycled, and other masonry waste, and legally dispose of off Owner's property.

END OF SECTION 042000

Copyright © 2025 by the American Institute of Architects. Warning: This AIA MasterSpec-based document is protected by U.S. Copyright Law and International Treaties. It was created by "Michael Shilale Architects, LLP" for "Renovation of Rockland Green Administrative Headquarters and Construction of an Immersive Theatre Experience". A valid, current MasterSpec license is required for editing and use of this document for any other project.(22360)

SECTION 042200 - CONCRETE UNIT MASONRY

PART 1 - GENERAL

1.1 SUMMARY

A. Section Includes:

1. Concrete masonry units.
2. Mortar and grout.
3. Miscellaneous masonry accessories.

B. Products Installed but not Furnished under This Section:

1. Cast-stone trim in concrete unit masonry.

C. Related Requirements:

1. Section 051200 "Structural Steel Framing" for installing anchor sections of adjustable masonry anchors for connecting to structural steel frame.
2. Section 071900 "Water Repellents" for water repellents applied to unit masonry assemblies.

1.2 DEFINITIONS

A. CMU(s): Concrete masonry unit(s).

B. Reinforced Masonry: Masonry containing reinforcing steel in grouted cells.

1.3 ACTION SUBMITTALS

A. Product Data: For each type of product.

B. <Click to insert sustainable design text for material ingredient screening and optimization action plan.>

C. Samples for Initial Selection:

1. Colored mortar.
2. Weep holes/vents.

D. Samples for Verification: For each type and color of the following:

1. Exposed CMUs.
2. Pigmented and colored-aggregate mortar. Make Samples using same sand and mortar ingredients to be used on Project.

Copyright © 2025 by the American Institute of Architects. Warning: This AIA MasterSpec-based document is protected by U.S. Copyright Law and International Treaties. It was created by "Michael Shilale Architects, LLP" for "Renovation of Rockland Green Administrative Headquarters and Construction of an Immersive Theatre Experience". A valid, current MasterSpec license is required for editing and use of this document for any other project.(22360)

1.4 INFORMATIONAL SUBMITTALS

A. Qualification Data: For testing agency.

B. Mix Designs: For each type of mortar and grout. Include description of type and proportions of ingredients.

1. Include test reports for mortar mixes required to comply with property specification. Test in accordance with ASTM C109/C109M for compressive strength, ASTM C1506 for water retention, and ASTM C91/C91M for air content.
2. Include test reports, in accordance with ASTM C1019, for grout mixes required to comply with compressive strength requirement.

C. Cold-Weather and Hot-Weather Procedures: Detailed description of methods, materials, and equipment to be used to comply with requirements.

1.5 QUALITY ASSURANCE

A. Testing Agency Qualifications: Qualified in accordance with ASTM C1093 for testing indicated.

B. Mockups: Build mockups to verify selections made under Sample submittals, to demonstrate aesthetic effects, and to set quality standards for materials and execution.

1. Build mockup [**of typical wall area**] as shown on Drawings.
2. Build mockups for [**each type of exposed unit masonry construction**] [**typical exterior wall**] [**typical interior wall**] [**typical exterior and interior walls**] in sizes approximately [**48 inches**] [**60 inches**] [**72 inches**] [**96 inches**] **<Insert dimension>** long by [**36 inches**] [**48 inches**] [**60 inches**] [**72 inches**] **<Insert dimension>** high by full thickness, including face and backup wythes and accessories.
   a. Include a sealant-filled joint at least 16 inches long in [**each**] [**exterior wall**] mockup.
   b. Include lower corner of window opening at upper corner of exterior wall mockup. Make opening approximately 12 inches wide by 16 inches high.
   c. Include through-wall flashing installed for a 24-inch length in corner of exterior wall mockup approximately 16 inches down from top of mockup, with a 12-inch length of flashing left exposed to view (omit masonry above half of flashing).
3. Protect accepted mockups from the elements with weather-resistant membrane.
4. Approval of mockups is for color, texture, and blending of masonry units; relationship of mortar and sealant colors to masonry unit colors; tooling of joints; and aesthetic qualities of workmanship.
   a. Approval of mockups is also for other material and construction qualities specifically approved by Architect in writing.
   b. Approval of mockups does not constitute approval of deviations from the Contract Documents contained in mockups unless Architect specifically approves such deviations in writing.
5. Subject to compliance with requirements, approved mockups may become part of the completed Work if undisturbed at time of Substantial Completion.

Copyright © 2025 by the American Institute of Architects. Warning: This AIA MasterSpec-based document is protected by U.S. Copyright Law and International Treaties. It was created by "Michael Shilale Architects, LLP" for "Renovation of Rockland Green Administrative Headquarters and Construction of an Immersive Theatre Experience". A valid, current MasterSpec license is required for editing and use of this document for any other project.(22360)

1.6 DELIVERY, STORAGE, AND HANDLING

A. Store masonry units on elevated platforms in a dry location. If units are not stored in an enclosed location, cover tops and sides of stacks with waterproof sheeting, securely tied. If units become wet, do not install until they are dry.

B. Store cementitious materials on elevated platforms, under cover, and in a dry location. Do not use cementitious materials that have become damp.

C. Store aggregates where grading and other required characteristics can be maintained and contamination avoided.

D. Deliver preblended, dry mortar mix in moisture-resistant containers. Store preblended, dry mortar mix in delivery containers on elevated platforms in a dry location or in covered weatherproof dispensing silos.

E. Store masonry accessories, including metal items, to prevent corrosion and accumulation of dirt and oil.

1.7 FIELD CONDITIONS

A. Protection of Masonry: During construction, cover tops of walls, projections, and sills with waterproof sheeting at end of each day's work. Cover partially completed masonry when construction is not in progress.

1. Extend cover a minimum of 24 inches down both sides of walls, and hold cover securely in place.

B. Do not apply uniform floor or roof loads for at least 12 hours and concentrated loads for at least three days after building masonry walls or columns.

C. Stain Prevention: Prevent grout, mortar, and soil from staining the face of masonry to be left exposed or painted. Immediately remove grout, mortar, and soil that come in contact with such masonry.

1. Protect base of walls from rain-splashed mud and from mortar splatter by spreading coverings on ground and over wall surface.
2. Protect sills, ledges, and projections from mortar droppings.
3. Protect surfaces of window and door frames, as well as similar products with painted and integral finishes, from mortar droppings.
4. Turn scaffold boards near the wall on edge at the end of each day to prevent rain from splashing mortar and dirt onto completed masonry.

D. Cold-Weather Requirements: Do not use frozen materials or materials mixed or coated with ice or frost. Do not build on frozen substrates. Remove and replace unit masonry damaged by frost or by freezing conditions. Comply with cold-weather construction requirements contained in TMS 602/ACI 530.1/ASCE 6.

Copyright © 2025 by the American Institute of Architects. Warning: This AIA MasterSpec-based document is protected by U.S. Copyright Law and International Treaties. It was created by "Michael Shilale Architects, LLP" for "Renovation of Rockland Green Administrative Headquarters and Construction of an Immersive Theatre Experience". A valid, current MasterSpec license is required for editing and use of this document for any other project.(22360)

1. Cold-Weather Cleaning: Use liquid cleaning methods only when air temperature is 40 deg F and higher and will remain so until masonry has dried, but not less than seven days after completing cleaning.

E. Hot-Weather Requirements: Comply with hot-weather construction requirements contained in TMS 602/ACI 530.1/ASCE 6.

PART 2 - PRODUCTS

2.1 MANUFACTURERS

2.2 PERFORMANCE REQUIREMENTS

A. Provide [**structural**] unit masonry that develops indicated net-area compressive strengths at 28 days.

1. Determine net-area compressive strength of masonry from average net-area compressive strengths of masonry units and mortar types (unit-strength method) in accordance with TMS 602/ACI 530.1/ASCE 6.
2. Determine net-area compressive strength of masonry by testing masonry prisms in accordance with ASTM C1314.

2.3 UNIT MASONRY, GENERAL

A. Masonry Standard: Comply with TMS 602/ACI 530.1/ASCE 6 except as modified by requirements in the Contract Documents.

B. Defective Units: Referenced masonry unit standards may allow a certain percentage of units to contain chips, cracks, or other defects exceeding limits stated. Do not use units where such defects are exposed in the completed Work [**and will be within 20 feet vertically and horizontally of a walking surface**].

C. Fire-Resistance Ratings: Comply with requirements for fire-resistance-rated assembly designs indicated.

1. Where fire-resistance-rated construction is indicated, units are listed and labeled by a qualified testing agency acceptable to authorities having jurisdiction.

2.4 CONCRETE MASONRY UNITS

A. Shapes: Provide shapes indicated and as follows, with exposed surfaces matching exposed faces of adjacent units unless otherwise indicated.

1. Provide special shapes for lintels, corners, jambs, sashes, movement joints, headers, bonding, and other special conditions.

Copyright © 2025 by the American Institute of Architects. Warning: This AIA MasterSpec-based document is protected by U.S. Copyright Law and International Treaties. It was created by "Michael Shilale Architects, LLP" for "Renovation of Rockland Green Administrative Headquarters and Construction of an Immersive Theatre Experience". A valid, current MasterSpec license is required for editing and use of this document for any other project.(22360)

2. Provide [**square-edged**] [**bullnose**] units for outside corners unless otherwise indicated.

B. Integral Water Repellent: Provide units made with integral water repellent [**for exposed units**] [**and**] [**where indicated**].

1. Integral Water Repellent: Liquid polymeric, integral water-repellent admixture that does not reduce flexural bond strength. Units made with integral water repellent, when tested in accordance with ASTM E514/E514M as a wall assembly made with mortar containing integral water-repellent manufacturer's mortar additive, with test period extended to 24 hours, show no visible water or leaks on the back of test specimen.
   a. <Click here to find, evaluate, and insert list of manufacturers and products.>

C. Insulated CMUs: Where indicated, units contain rigid, specially shaped, molded-polystyrene insulation units complying with ASTM C578, Type I, designed for installing in cores of masonry units.

1. <Click here to find, evaluate, and insert list of manufacturers and products.>

D. CMUs: ASTM C90.

1. Unit Compressive Strength: Provide units with minimum average net-area compressive strength of [**2150 psi**] [**2800 psi**] [**3050 psi**] <**Insert value>**.
2. Density Classification: Normal weight [**unless otherwise indicated**].
3. Size (Width): Manufactured to dimensions 3/8 inch less-than-nominal dimensions.
4. Exposed Faces: Provide color and texture matching the range represented by Architect's sample.
5. Faces to Receive Plaster: Where units are indicated to receive a direct application of plaster, provide textured-face units made with gap-graded aggregates.

2.5 MORTAR AND GROUT MATERIALS

A. Portland Cement: ASTM C150/C150M, Type I or II, except Type III may be used for cold-weather construction. Provide natural color or white cement as required to produce mortar color indicated.

1. Alkali content is not more than 0.1 percent when tested in accordance with ASTM C114.

B. Mortar Cement: ASTM C1329/C1329M.

1. <Click here to find, evaluate, and insert list of manufacturers and products.>

C. Mortar Pigments: Natural and synthetic iron oxides and chromium oxides, compounded for use in mortar mixes and complying with ASTM C979/C979M. Use only pigments with a record of satisfactory performance in masonry mortar.

1. <Click here to find, evaluate, and insert list of manufacturers and products.>

D. Water: Potable.

Copyright © 2025 by the American Institute of Architects. Warning: This AIA MasterSpec-based document is protected by U.S. Copyright Law and International Treaties. It was created by "Michael Shilale Architects, LLP" for "Renovation of Rockland Green Administrative Headquarters and Construction of an Immersive Theatre Experience". A valid, current MasterSpec license is required for editing and use of this document for any other project.(22360)

2.6 TIES AND ANCHORS

A. General: Ties and anchors extend at least 1-1/2 inches into masonry but with at least a 5/8-inch cover on outside face.

B. Materials: Provide ties and anchors specified in this article that are made from materials that comply with the following unless otherwise indicated:

1. Mill-Galvanized, Carbon-Steel Wire: ASTM A82/A82M, with ASTM A641/A641M, Class 1 coating.
2. Hot-Dip Galvanized, Carbon-Steel Wire: ASTM A82/A82M, with ASTM A153/A153M, Class B-2 coating.
3. Stainless Steel Wire: ASTM A580/A580M, [**Type 304**] [**Type 316**].
4. Galvanized-Steel Sheet: ASTM A653/A653M, Commercial Steel, G60 zinc coating.
5. Steel Sheet, Galvanized after Fabrication: ASTM A1008/A1008M, Commercial Steel, with ASTM A153/A153M, Class B coating.
6. Stainless Steel Sheet: ASTM A240/A240M or ASTM A666, [**Type 304**] [**Type 316**].
7. Steel Plates, Shapes, and Bars: ASTM A36/A36M.

C. Rigid Anchors: Fabricate from steel bars [**1-1/2 inches wide by 1/4 inch thick by 24 inches long, with ends turned up 2 inches or with cross pins unless otherwise indicated**] [**bent to configuration indicated**].

1. Corrosion Protection: [**Hot-dip galvanized to comply with ASTMA 153/A153M**] [**Epoxy coating 0.020 inch thick**] [**Rust-inhibitive paint**].

2.7 MISCELLANEOUS MASONRY ACCESSORIES

A. Compressible Filler: Premolded filler strips complying with ASTM D1056, Grade 2A1; compressible up to 35 percent; of width and thickness indicated; formulated from [**neoprene**] [**urethane**] [**or**] [**PVC**].

B. Preformed Control-Joint Gaskets: Made from [**styrene-butadiene-rubber compound, complying with ASTM D2000, Designation M2AA-805**] [**or**] [**PVC, complying with ASTM D2287, Type PVC-65406**] and designed to fit standard sash block and to maintain lateral stability in masonry wall; size and configuration as indicated.

2.8 MORTAR AND GROUT MIXES

A. General: Do not use admixtures, including pigments, air-entraining agents, accelerators, retarders, water-repellent agents, antifreeze compounds, or other admixtures unless otherwise indicated.

1. Do not use calcium chloride in mortar or grout.
2. Use [**or**] mortar cement mortar unless otherwise indicated.
3. For exterior masonry, use [**or**] mortar cement mortar.
4. For reinforced masonry, use [**or**] mortar cement mortar.

Copyright © 2025 by the American Institute of Architects. Warning: This AIA MasterSpec-based document is protected by U.S. Copyright Law and International Treaties. It was created by "Michael Shilale Architects, LLP" for "Renovation of Rockland Green Administrative Headquarters and Construction of an Immersive Theatre Experience". A valid, current MasterSpec license is required for editing and use of this document for any other project.(22360)

5. Add cold-weather admixture (if used) at same rate for all mortar that will be exposed to view, regardless of weather conditions, to ensure that mortar color is consistent.

B. Mortar for Unit Masonry: Comply with ASTM C270, [**Proportion**] [**Property**] Specification. Provide the following types of mortar for applications stated unless another type is indicated [**or needed to provide required compressive strength of masonry**].

1. For masonry below grade or in contact with earth, use [**Type M**] [**Type S**].
2. For reinforced masonry, use [**Type S**] [**Type N**].
3. For mortar parge coats, use [**Type S**] [**or**] [**Type N**].
4. For exterior, above-grade, load-bearing and nonload-bearing walls and parapet walls; for interior load-bearing walls; for interior nonload-bearing partitions; and for other applications where another type is not indicated, use Type N.
5. For interior nonload-bearing partitions, Type O may be used instead of Type N.

PART 3 - EXECUTION

3.1 EXAMINATION

A. Examine conditions, with Installer present, for compliance with requirements for installation tolerances and other conditions affecting performance of the Work.

1. For the record, prepare written report, endorsed by Installer, listing conditions detrimental to performance of the Work.
2. Verify that foundations are within tolerances specified.
3. Verify that reinforcing dowels are properly placed.
4. Verify that substrates are free of substances that would impair mortar bond.

B. Before installation, examine rough-in and built-in construction for piping systems to verify actual locations of piping.

C. Proceed with installation only after unsatisfactory conditions have been corrected.

3.2 INSTALLATION, GENERAL

A. Build chases and recesses to accommodate items specified in this and other Sections.

B. Leave openings for equipment to be installed before completing masonry. After installing equipment, complete masonry to match construction immediately adjacent to opening.

C. Use full-size units without cutting if possible. If cutting is required to provide a continuous pattern or to fit adjoining construction, cut units with motor-driven saws; provide clean, sharp, unchipped edges. Allow units to dry before laying unless wetting of units is specified. Install cut units with cut surfaces and, where possible, cut edges concealed.

Copyright © 2025 by the American Institute of Architects. Warning: This AIA MasterSpec-based document is protected by U.S. Copyright Law and International Treaties. It was created by "Michael Shilale Architects, LLP" for "Renovation of Rockland Green Administrative Headquarters and Construction of an Immersive Theatre Experience". A valid, current MasterSpec license is required for editing and use of this document for any other project.(22360)

3.3 TOLERANCES

A. Dimensions and Locations of Elements:

1. For dimensions in cross section or elevation, do not vary by more than plus 1/2 inch or minus 1/4 inch.
2. For location of elements in plan, do not vary from that indicated by more than plus or minus 1/2 inch.
3. For location of elements in elevation, do not vary from that indicated by more than plus or minus 1/4 inch in a story height or 1/2 inch total.

B. Lines and Levels:

1. For bed joints and top surfaces of bearing walls, do not vary from level by more than 1/4 inch in 10 feet, or 1/2-inch maximum.
2. For conspicuous horizontal lines, such as lintels, sills, parapets, and reveals, do not vary from level by more than 1/8 inch in 10 feet, 1/4 inch in 20 feet, or 1/2-inch maximum.
3. For vertical lines and surfaces do not vary from plumb by more than 1/4 inch in 10 feet, 3/8 inch in 20 feet, or 1/2-inch maximum.
4. For conspicuous vertical lines, such as external corners, door jambs, reveals, and expansion and control joints, do not vary from plumb by more than 1/8 inch in 10 feet, 1/4 inch in 20 feet, or 1/2-inch maximum.
5. For lines and surfaces, do not vary from straight by more than 1/4 inch in 10 feet, 3/8 inch in 20 feet, or 1/2-inch maximum.
6. For vertical alignment of exposed head joints, do not vary from plumb by more than 1/4 inch in 10 feet, or 1/2-inch maximum.
7. For faces of adjacent exposed masonry units, do not vary from flush alignment by more than 1/16 inch.

C. Joints:

1. For bed joints, do not vary from thickness indicated by more than plus or minus 1/8 inch, with a maximum thickness limited to 1/2 inch.
2. For exposed bed joints, do not vary from bed-joint thickness of adjacent courses by more than 1/8 inch.
3. For head and collar joints, do not vary from thickness indicated by more than plus 3/8 inch or minus 1/4 inch.
4. For exposed head joints, do not vary from thickness indicated by more than plus or minus 1/8 inch.

3.4 LAYING MASONRY WALLS

A. Lay out walls in advance for accurate spacing of surface bond patterns with uniform joint thicknesses and for accurate location of openings, movement-type joints, returns, and offsets. Avoid using less-than-half-size units, particularly at corners, jambs, and, where possible, at other locations.

Copyright © 2025 by the American Institute of Architects. Warning: This AIA MasterSpec-based document is protected by U.S. Copyright Law and International Treaties. It was created by "Michael Shilale Architects, LLP" for "Renovation of Rockland Green Administrative Headquarters and Construction of an Immersive Theatre Experience". A valid, current MasterSpec license is required for editing and use of this document for any other project.(22360)

B. Bond Pattern for Exposed Masonry: Unless otherwise indicated, lay exposed masonry in [**running bond**] [**bond pattern indicated on Drawings**]; do not use units with less-than-nominal 4-inch horizontal face dimensions at corners or jambs.

C. Lay concealed masonry with all units in a wythe in running bond or bonded by lapping not less than [**2 inches**] [**4 inches**]. Bond and interlock each course of each wythe at corners. Do not use units with less-than-nominal 4-inch horizontal face dimensions at corners or jambs.

D. Stopping and Resuming Work: Stop work by stepping back units in each course from those in course below; do not tooth. When resuming work, clean masonry surfaces that are to receive mortar, remove loose masonry units and mortar, and wet brick if required before laying fresh masonry.

E. Built-in Work: As construction progresses, build in items specified in this and other Sections. Fill in solidly with masonry around built-in items.

F. Fill space between steel frames and masonry solidly with mortar unless otherwise indicated.

G. Where built-in items are to be embedded in cores of hollow masonry units, place a layer of metal lath, wire mesh, or plastic mesh in the joint below, and rod mortar or grout into core.

H. Fill cores in hollow CMUs with grout 24 inches under bearing plates, beams, lintels, posts, and similar items unless otherwise indicated.

I. Build nonload-bearing interior partitions full height of story to underside of solid floor or roof structure above unless otherwise indicated.

1. Install compressible filler in joint between top of partition and underside of structure above.
2. Fasten partition top anchors to structure above and build into top of partition. Grout cells of CMUs solidly around plastic tubes of anchors and push tubes down into grout to provide 1/2-inch clearance between end of anchor rod and end of tube. Space anchors [**48 inches**] <**Insert spacing>** o.c. unless otherwise indicated.
3. Wedge nonload-bearing partitions against structure above with small pieces of tile, slate, or metal. Fill joint with mortar after dead-load deflection of structure above approaches final position.
4. At fire-rated partitions, treat joint between top of partition and underside of structure above to comply with Section 078443 "Joint Firestopping."

3.5 MORTAR BEDDING AND JOINTING

A. Lay hollow CMUs as follows:

1. Bed face shells in mortar and make head joints of depth equal to bed joints.
2. Bed webs in mortar in all courses of piers, columns, and pilasters.
3. Bed webs in mortar in grouted masonry, including starting course on footings.
4. Fully bed entire units, including areas under cells, at starting course on footings where cells are not grouted.

Copyright © 2025 by the American Institute of Architects. Warning: This AIA MasterSpec-based document is protected by U.S. Copyright Law and International Treaties. It was created by "Michael Shilale Architects, LLP" for "Renovation of Rockland Green Administrative Headquarters and Construction of an Immersive Theatre Experience". A valid, current MasterSpec license is required for editing and use of this document for any other project.(22360)

B. Lay solid CMUs with completely filled bed and head joints; butter ends with sufficient mortar to fill head joints and shove into place. Do not deeply furrow bed joints or slush head joints.

C. Set cast-stone trim units in full bed of mortar with full vertical joints. Fill dowel, anchor, and similar holes.

1. Clean soiled surfaces with fiber brush and soap powder and rinse thoroughly with clear water.
2. Wet joint surfaces thoroughly before applying mortar.
3. Rake out mortar joints for pointing with sealant.

D. Rake out mortar joints at pre-faced CMUs to a uniform depth of 1/4 inch and point with epoxy mortar to comply with epoxy-mortar manufacturer's written instructions.

E. Tool exposed joints slightly concave when thumbprint hard, using a jointer larger than joint thickness unless otherwise indicated.

F. Cut joints flush for masonry walls to receive plaster or other direct-applied finishes (other than paint) unless otherwise indicated.

G. Cut joints flush where indicated to receive waterproofing unless otherwise indicated.

3.6 ANCHORING MASONRY TO STRUCTURAL STEEL AND CONCRETE

A. Anchor masonry to structural steel and concrete, where masonry abuts or faces structural steel or concrete, to comply with the following:

1. Provide an open space not less than [**1/2 inch**] [**1 inch**] [**2 inches**] wide between masonry and structural steel or concrete unless otherwise indicated. Keep open space free of mortar and other rigid materials.
2. Anchor masonry with anchors embedded in masonry joints and attached to structure.
3. Space anchors as indicated, but not more than 24 inches o.c. vertically and 36 inches o.c. horizontally.

3.7 CONTROL AND EXPANSION JOINTS

A. General: Install control- and expansion-joint materials in unit masonry as masonry progresses. Do not allow materials to span control and expansion joints without provision to allow for in-plane wall or partition movement.

B. Form control joints in concrete masonry [**as follows**] [**using one of the following methods**]:

1. Fit bond-breaker strips into hollow contour in ends of CMUs on one side of control joint. Fill resultant core with grout, and rake out joints in exposed faces for application of sealant.
2. Install preformed control-joint gaskets designed to fit standard sash block.
3. Install interlocking units designed for control joints. Install bond-breaker strips at joint. Keep head joints free and clear of mortar, or rake out joint for application of sealant.

Copyright © 2025 by the American Institute of Architects. Warning: This AIA MasterSpec-based document is protected by U.S. Copyright Law and International Treaties. It was created by "Michael Shilale Architects, LLP" for "Renovation of Rockland Green Administrative Headquarters and Construction of an Immersive Theatre Experience". A valid, current MasterSpec license is required for editing and use of this document for any other project.(22360)

4. Install temporary foam-plastic filler in head joints, and remove filler when unit masonry is complete for application of sealant.

3.8 FIELD QUALITY CONTROL

A. Testing and Inspecting: Owner will engage special inspectors to perform tests and inspections and prepare reports. Allow inspectors access to scaffolding and work areas as needed to perform tests and inspections. Retesting of materials that fail to comply with specified requirements is done at Contractor's expense.

B. Inspections: Special inspections in accordance with Level [**B**] [**C**] in TMS 402/ACI 530/ASCE 5.

1. Begin masonry construction only after inspectors have verified proportions of site-prepared mortar.
2. Place grout only after inspectors have verified compliance of grout spaces and of grades, sizes, and locations of reinforcement.
3. Place grout only after inspectors have verified proportions of site-prepared grout.

C. Testing Prior to Construction: One set of tests.

D. Testing Frequency: One set of tests for each 5000 sq. ft. of wall area or portion thereof.

E. Concrete Masonry Unit Test: For each type of unit provided, in accordance with ASTM C140 for compressive strength.

F. Mortar Aggregate Ratio Test (Proportion Specification): For each mix provided, in accordance with ASTM C780.

G. Mortar Test (Property Specification): For each mix provided, in accordance with ASTM C780. Test mortar for [**mortar air content**] [**and**] [**compressive strength**].

H. Grout Test (Compressive Strength): For each mix provided, in accordance with ASTM C1019.

I. Prism Test: For each type of construction provided, in accordance with ASTM C1314 at [**7 days and at**]28 days.

3.9 PARGING

A. Parge exterior faces of below-grade masonry walls, where indicated, in two uniform coats to a total thickness of 3/4 inch. Dampen wall before applying first coat, and scarify first coat to ensure full bond to subsequent coat.

B. Use a steel-trowel finish to produce a smooth, flat, dense surface with a maximum surface variation of 1/8 inch per foot. Form a wash at top of parging and a cove at bottom.

C. Damp-cure parging for at least 24 hours and protect parging until cured.

Copyright © 2025 by the American Institute of Architects. Warning: This AIA MasterSpec-based document is protected by U.S. Copyright Law and International Treaties. It was created by "Michael Shilale Architects, LLP" for "Renovation of Rockland Green Administrative Headquarters and Construction of an Immersive Theatre Experience". A valid, current MasterSpec license is required for editing and use of this document for any other project.(22360)

3.10 REPAIRING, POINTING, AND CLEANING

A. Remove and replace masonry units that are loose, chipped, broken, stained, or otherwise damaged or that do not match adjoining units. Install new units to match adjoining units; install in fresh mortar, pointed to eliminate evidence of replacement.

B. Pointing: During the tooling of joints, enlarge voids and holes, except weep holes, and completely fill with mortar. Point up joints, including corners, openings, and adjacent construction, to provide a neat, uniform appearance. Prepare joints for sealant application, where indicated.

C. In-Progress Cleaning: Clean unit masonry as work progresses by dry brushing to remove mortar fins and smears before tooling joints.

D. Final Cleaning: After mortar is thoroughly set and cured, clean exposed masonry as follows:

1. Remove large mortar particles by hand with wooden paddles and nonmetallic scrape hoes or chisels.
2. Test cleaning methods on sample wall panel; leave one-half of panel uncleaned for comparison purposes. Obtain Architect's approval of sample cleaning before proceeding with cleaning of masonry.
3. Protect adjacent stone and nonmasonry surfaces from contact with cleaner by covering them with liquid strippable masking agent or polyethylene film and waterproof masking tape.
4. Wet wall surfaces with water before applying cleaners; remove cleaners promptly by rinsing surfaces thoroughly with clear water.
5. Clean concrete masonry by applicable cleaning methods indicated in NCMA TEK 8-4A.

3.11 MASONRY WASTE DISPOSAL

A. Salvageable Materials: Unless otherwise indicated, excess masonry materials are Contractor's property. At completion of unit masonry work, remove from Project site.

B. Waste Disposal as Fill Material: Dispose of clean masonry waste, including excess or soil-contaminated sand, waste mortar, and broken masonry units, by crushing and mixing with fill material as fill is placed.

1. Crush masonry waste to less than 4 inches in each dimension.
2. Mix masonry waste with at least two parts of specified fill material for each part of masonry waste. Fill material is specified in Section 312000 "Earth Moving."
3. Do not dispose of masonry waste as fill within 18 inches of finished grade.

C. Masonry Waste Recycling: Return broken CMUs not used as fill to manufacturer for recycling.

D. Excess Masonry Waste: Remove excess clean masonry waste that cannot be used as fill, as described above or recycled, and other masonry waste, and legally dispose of off Owner's property.

Copyright © 2025 by the American Institute of Architects. Warning: This AIA MasterSpec-based document is protected by U.S. Copyright Law and International Treaties. It was created by "Michael Shilale Architects, LLP" for "Renovation of Rockland Green Administrative Headquarters and Construction of an Immersive Theatre Experience". A valid, current MasterSpec license is required for editing and use of this document for any other project.(22360)

END OF SECTION 042200

Copyright © 2025 by the American Institute of Architects. Warning: This AIA MasterSpec-based document is protected by U.S. Copyright Law and International Treaties. It was created by "Michael Shilale Architects, LLP" for "Renovation of Rockland Green Administrative Headquarters and Construction of an Immersive Theatre Experience". A valid, current MasterSpec license is required for editing and use of this document for any other project.(22360)

SECTION 054000 - COLD-FORMED METAL FRAMING

PART 1 - GENERAL

1.1 SUMMARY

A. Section Includes:

1. Exterior non-load-bearing wall framing.
2. Interior non-load-bearing wall framing.
3. Soffit framing.

B. Related Requirements:

1. Section 092216 "Non-Structural Metal Framing" for standard, interior non-load-bearing, metal-stud framing, with height limitations and ceiling-suspension assemblies.

1.2 ACTION SUBMITTALS

A. Product Data: For the following:

1. Cold-formed steel framing materials.
2. Exterior non-load-bearing wall framing.
3. Interior non-load-bearing wall framing.
4. Vertical deflection clips.
5. Single deflection track.
6. Double deflection track.
7. Drift clips.
8. Soffit framing.
9. Post-installed anchors.
10. Power-actuated anchors.

1.3 INFORMATIONAL SUBMITTALS

A. Product Certificates: For each type of code-compliance certification for studs and tracks.

B. Product Test Reports: For each listed product, for tests performed by a qualified testing agency.

1. Steel sheet.
2. Expansion anchors.
3. Power-actuated anchors.
4. Mechanical fasteners.
5. Vertical deflection clips.
6. Horizontal drift deflection clips
7. Miscellaneous structural clips and accessories.

Copyright © 2025 by the American Institute of Architects. Warning: This AIA MasterSpec-based document is protected by U.S. Copyright Law and International Treaties. It was created by "Michael Shilale Architects, LLP" for "Renovation of Rockland Green Administrative Headquarters and Construction of an Immersive Theatre Experience". A valid, current MasterSpec license is required for editing and use of this document for any other project.(22360)

1.4 QUALITY ASSURANCE

A. Testing Agency Qualifications: Qualified according to ASTM E329 for testing indicated.

B. Product Tests: Mill certificates or data from a qualified independent testing agency , or in-house testing with calibrated test equipment, indicating steel sheet complies with requirements, including base-metal thickness, yield strength, tensile strength, total elongation, chemical requirements, and metallic-coating thickness.

C. Code-Compliance Certification of Studs and Tracks: Provide documentation that framing members are certified according to the product-certification program of the Steel Framing Industry Association the Steel Stud Manufacturers Association .

D. Comply with AISI S230 "Standard for Cold-Formed Steel Framing - Prescriptive Method for One and Two Family Dwellings."

1.5 DELIVERY, STORAGE, AND HANDLING

A. Protect and store cold-formed steel framing from corrosion, moisture staining, deformation, and other damage during delivery, storage, and handling as required in AISI S202.

PART 2 - PRODUCTS

2.1 MANUFACTURERS

A. Manufacturers: Subject to compliance with requirements, provide products by one of the following:

1. ClarkDietrich.
2. Marino\WARE.
3. Steel Network, Inc. (The).

2.2 PERFORMANCE REQUIREMENTS

A. Structural Performance: Provide cold-formed steel framing capable of withstanding design loads within limits and under conditions indicated.

1. Design Loads: As indicated on Drawings .
2. Deflection Limits: Design framing systems to withstand design loads without deflections greater than the following:
   a. Exterior Non-Load-Bearing Framing: Horizontal deflection of 1/360 of the wall height.
   b. Interior Non-Load-Bearing Framing: Horizontal deflection of 1/360 of the wall height under a horizontal load of 5 lbf/sq. ft..
   c. Ceiling Joist Framing: Vertical deflection of 1/240 of the span for live loads and 1/240 for total loads of the span.

Copyright © 2025 by the American Institute of Architects. Warning: This AIA MasterSpec-based document is protected by U.S. Copyright Law and International Treaties. It was created by "Michael Shilale Architects, LLP" for "Renovation of Rockland Green Administrative Headquarters and Construction of an Immersive Theatre Experience". A valid, current MasterSpec license is required for editing and use of this document for any other project.(22360)

3. Design framing systems to provide for movement of framing members located outside the insulated building envelope without damage or overstressing, sheathing failure, connection failure, undue strain on fasteners and anchors, or other detrimental effects when subject to a maximum ambient temperature change of 120 deg F.
4. Design framing system to maintain clearances at openings, to allow for construction tolerances, and to accommodate live load deflection of primary building structure as follows:
   a. Upward and downward movement of 1 inch .
5. Design exterior non-load-bearing wall framing to accommodate horizontal deflection without regard for contribution of sheathing materials.

B. Cold-Formed Steel Framing Standards: Unless more stringent requirements are indicated, framing complies with AISI S100 and ASTM C955 .

C. Fire-Resistance Ratings: Comply with ASTM E119; testing by a qualified testing agency. Identify products with appropriate markings of applicable testing agency.

1. Indicate design designations from UL's "Fire Resistance Directory" or from the listings of another qualified testing agency acceptable to authorities having jurisdiction.

2.3 COLD-FORMED STEEL FRAMING MATERIALS

A. Framing Members, General: Comply with ASTM C955 for conditions indicated.

B. Steel Sheet: ASTM A1003/A1003M, Structural Grade, Type H, metallic coated, of grade and coating designation as follows:

1. Grade: ST50H .
2. Coating: G90 or equivalent .

C. Steel Sheet for Vertical Deflection Clips: ASTM A653/A653M, structural steel, zinc coated, of grade and coating as follows:

1. Grade: 50 , Class 1 As required by structural performance .
2. Coating: G90 .

2.4 EXTERIOR NON-LOAD-BEARING WALL FRAMING

A. Steel Studs: Manufacturer's standard C-shaped steel studs, of web depths indicated, punched, with stiffened flanges, and as follows:

1. Minimum Base-Metal Thickness: 0.0677 inch .
2. Flange Width: 1-5/8 inches .

B. Steel Track: Manufacturer's standard U-shaped steel track, of web depths indicated, unpunched, with unstiffened flanges, and as follows:

1. Minimum Base-Metal Thickness: 0.0677 inch .

Copyright © 2025 by the American Institute of Architects. Warning: This AIA MasterSpec-based document is protected by U.S. Copyright Law and International Treaties. It was created by "Michael Shilale Architects, LLP" for "Renovation of Rockland Green Administrative Headquarters and Construction of an Immersive Theatre Experience". A valid, current MasterSpec license is required for editing and use of this document for any other project.(22360)

2. Flange Width: 1-1/4 inches .

C. Double Deflection Tracks: Manufacturer's double, deep-leg, U-shaped steel tracks, consisting of nested inner and outer tracks; unpunched, with unstiffened flanges.

1. Outer Track: Of web depth to allow free vertical movement of inner track, with flanges designed to support horizontal loads and transfer them to the primary structure, and as follows:
   a. Minimum Base-Metal Thickness: 0.0677 inch .
   b. Flange Width: 1 inch plus twice the design gap for other applications .
2. Inner Track: Of web depth indicated, and as follows:
   a. Minimum Base-Metal Thickness: 0.0677 inch .

D. Drift Clips: Manufacturer's standard bypass or head clips, capable of isolating wall stud from upward and downward vertical displacement and lateral drift of primary structure through positive mechanical attachment to stud web and structure.

2.5 INTERIOR NON-LOAD-BEARING WALL FRAMING

A. Steel Studs: Manufacturer's standard C-shaped steel studs, of web depths indicated, punched, with stiffened flanges, and as follows:

1. Minimum Base-Metal Thickness: 0.0677 inch .
2. Flange Width: 1-5/8 inches .

B. Steel Track: Manufacturer's standard U-shaped steel track, of web depths indicated, unpunched, with unstiffened flanges, and as follows:

1. Minimum Base-Metal Thickness: 0.0677 inch .
2. Flange Width: 1-1/4 inches .

C. Double Deflection Tracks: Manufacturer's double, deep-leg, U-shaped steel tracks, consisting of nested inner and outer tracks; unpunched, with unstiffened flanges.

1. Outer Track: Of web depth to allow free vertical movement of inner track, with flanges designed to support horizontal loads and transfer them to the primary structure, and as follows:
   a. Minimum Base-Metal Thickness: 0.0677 inch .
   b. Flange Width: 1 inch plus twice the design gap for other applications .
2. Inner Track: Of web depth indicated, and as follows:
   a. Minimum Base-Metal Thickness: 0.0677 inch .

D. Drift Clips: Manufacturer's standard bypass or head clips, capable of isolating wall stud from upward and downward vertical displacement and lateral drift of primary structure through positive mechanical attachment to stud web and structure.

Copyright © 2025 by the American Institute of Architects. Warning: This AIA MasterSpec-based document is protected by U.S. Copyright Law and International Treaties. It was created by "Michael Shilale Architects, LLP" for "Renovation of Rockland Green Administrative Headquarters and Construction of an Immersive Theatre Experience". A valid, current MasterSpec license is required for editing and use of this document for any other project.(22360)

2.6 SOFFIT FRAMING

A. Exterior Soffit Frame: Manufacturer's standard C-shaped steel sections, of web depths indicated, with stiffened flanges, and as follows:

1. Minimum Base-Metal Thickness: 0.0677 inch .
2. Flange Width: 1-5/8 inches , minimum.

2.7 FRAMING ACCESSORIES

A. Fabricate steel-framing accessories from ASTM A1003/A1003M, Structural Grade, Type H, metallic coated steel sheet, of same grade and coating designation used for framing members.

B. Provide accessories of manufacturer's standard thickness and configuration, unless otherwise indicated, as follows:

1. Bracing, bridging, and solid blocking.
2. Web stiffeners.
3. Anchor clips.
4. End clips.
5. Joist hangers and end closures.
6. Backer plates.

2.8 ANCHORS, CLIPS, AND FASTENERS

A. Steel Shapes and Clips: ASTM A36/A36M, zinc coated by hot-dip process according to ASTM A123/A123M.

B. Post-Installed Anchors: Fastener systems with bolts of same basic metal as fastened metal, if visible, unless otherwise indicated; with working capacity greater than or equal to the design load, according to an evaluation report acceptable to authorities having jurisdiction, based on ICC-ES AC01 ICC-ES AC193 ICC-ES AC58 or ICC-ES AC308 as appropriate for the substrate.

1. Uses: Securing cold-formed steel framing to structure.
2. Type: Torque-controlled adhesive anchor or adhesive anchor.
3. Material for Interior Locations: Carbon-steel components zinc plated to comply with ASTM B633 or ASTM F1941, Class Fe/Zn 5, unless otherwise indicated.

C. Power-Actuated Anchors: Fastener systems with working capacity greater than or equal to the design load, according to an evaluation report acceptable to authorities having jurisdiction, based on ICC-ES AC70.

D. Mechanical Fasteners: ASTM C1513, corrosion-resistant-coated, self-drilling, self-tapping, steel drill screws.

1. Head Type: Low-profile head beneath sheathing; manufacturer's standard elsewhere.

Copyright © 2025 by the American Institute of Architects. Warning: This AIA MasterSpec-based document is protected by U.S. Copyright Law and International Treaties. It was created by "Michael Shilale Architects, LLP" for "Renovation of Rockland Green Administrative Headquarters and Construction of an Immersive Theatre Experience". A valid, current MasterSpec license is required for editing and use of this document for any other project.(22360)

E. Welding Electrodes: Comply with AWS standards.

2.9 MISCELLANEOUS MATERIALS

A. Shims: Load-bearing, high-density, multimonomer, nonleaching plastic; or cold-formed steel of same grade and metallic coating as framing members supported by shims.

2.10 FABRICATION

A. Fabricate cold-formed steel framing and accessories plumb, square, and true to line, and with connections securely fastened, according to referenced AISI's specifications and standards, manufacturer's written instructions, and requirements in this Section.

1. Fabricate framing assemblies using jigs or templates.
2. Cut framing members by sawing or shearing; do not torch cut.
3. Fasten cold-formed steel framing members by welding, screw fastening, clinch fastening, pneumatic pin fastening, or riveting as standard with fabricator. Wire tying of framing members is not permitted.
   a. Comply with AWS D1.3/D1.3M requirements and procedures for welding, appearance and quality of welds, and methods used in correcting welding work.
   b. Locate mechanical fasteners and install according to Shop Drawings, with screws penetrating joined members by no fewer than three exposed screw threads.
4. Fasten other materials to cold-formed steel framing by welding, bolting, pneumatic pin fastening, or screw fastening, according to Shop Drawings.

B. Reinforce, stiffen, and brace framing assemblies to withstand handling, delivery, and erection stresses. Lift fabricated assemblies by means that prevent damage or permanent distortion.

C. Tolerances: Fabricate assemblies level, plumb, and true to line to a maximum allowable variation of 1/8 inch in 10 feet and as follows:

1. Spacing: Space individual framing members no more than plus or minus 1/8 inch from plan location. Cumulative error are not to exceed minimum fastening requirements of sheathing or other finishing materials.
2. Squareness: Fabricate each cold-formed steel framing assembly to a maximum out-of-square tolerance of 1/8 inch.

PART 3 - EXECUTION

3.1 EXAMINATION

A. Examine substrates, areas, conditions, and abutting structural framing for compliance with requirements for installation tolerances and other conditions affecting performance of the Work.

B. Proceed with installation only after unsatisfactory conditions have been corrected.

Copyright © 2025 by the American Institute of Architects. Warning: This AIA MasterSpec-based document is protected by U.S. Copyright Law and International Treaties. It was created by "Michael Shilale Architects, LLP" for "Renovation of Rockland Green Administrative Headquarters and Construction of an Immersive Theatre Experience". A valid, current MasterSpec license is required for editing and use of this document for any other project.(22360)

3.2 PREPARATION

A. Before sprayed fire-resistive materials are applied, attach continuous angles, supplementary framing, or tracks to structural members indicated to receive sprayed fire-resistive materials.

B. After applying sprayed fire-resistive materials, remove only as much of these materials as needed to complete installation of cold-formed framing without reducing thickness of fire-resistive materials below that required to obtain fire-resistance ratings indicated. Protect remaining fire-resistive materials from damage.

C. Install load-bearing shims or grout between the underside of load-bearing wall bottom track and the top of foundation wall or slab at locations with a gap larger than 1/4 inch to ensure a uniform bearing surface on supporting concrete or masonry construction.

D. Install sill sealer gasket at the underside of wall bottom track or rim track and at the top of foundation wall or slab at stud or joist locations.

E. Install sill sealer gasket/termite barrier in accordance with manufacturer's written instructions at the underside of wall bottom track or rim track and at the top of foundation wall or slab at stud or joist locations.

3.3 INSTALLATION, GENERAL

A. Cold-formed steel framing may be shop or field fabricated for installation, or it may be field assembled.

B. Install cold-formed steel framing according to AISI S200, AISI S202, and manufacturer's written instructions unless more stringent requirements are indicated.

C. Install shop- or field-fabricated, cold-formed framing and securely anchor to supporting structure.

1. Screw, bolt, or weld wall panels at horizontal and vertical junctures to produce flush, even, true-to-line joints with maximum variation in plane and true position between fabricated panels not exceeding 1/16 inch.

D. Install cold-formed steel framing and accessories plumb, square, and true to line, and with connections securely fastened.

1. Cut framing members by sawing or shearing; do not torch cut.
2. Fasten cold-formed steel framing members by welding, screw fastening, clinch fastening, or riveting. Wire tying of framing members is not permitted.
   a. Comply with AWS D1.3/D1.3M requirements and procedures for welding, appearance and quality of welds, and methods used in correcting welding work.
   b. Locate mechanical fasteners, install according to Shop Drawings, and comply with requirements for spacing, edge distances, and screw penetration.

E. Install framing members in one-piece lengths unless splice connections are indicated for track or tension members.

Copyright © 2025 by the American Institute of Architects. Warning: This AIA MasterSpec-based document is protected by U.S. Copyright Law and International Treaties. It was created by "Michael Shilale Architects, LLP" for "Renovation of Rockland Green Administrative Headquarters and Construction of an Immersive Theatre Experience". A valid, current MasterSpec license is required for editing and use of this document for any other project.(22360)

F. Install temporary bracing and supports to secure framing and support loads equal to those for which structure was designed. Maintain braces and supports in place, undisturbed, until entire integrated supporting structure has been completed and permanent connections to framing are secured.

G. Do not bridge building expansion joints with cold-formed steel framing. Independently frame both sides of joints.

H. Install insulation, specified in Section 072100 "Thermal Insulation," in framing-assembly members, such as headers, sills, boxed joists, and multiple studs at openings, that are inaccessible on completion of framing work.

I. Fasten hole-reinforcing plate over web penetrations that exceed size of manufacturer's approved or standard punched openings.

3.4 INSTALLATION OF EXTERIOR NONLOADBEARING WALL FRAMING

A. Install continuous tracks sized to match studs. Align tracks accurately and securely anchor to supporting structure.

B. Fasten both flanges of studs to top and bottom track unless otherwise indicated. Space studs as follows:

1. Stud Spacing: 16 inches .

C. Set studs plumb, except as needed for diagonal bracing or required for nonplumb walls or warped surfaces and similar requirements.

D. Isolate non-load-bearing steel framing from building structure to prevent transfer of vertical loads while providing lateral support.

1. Install single deep-leg deflection tracks and anchor to building structure.
2. Install double deep-leg deflection tracks and anchor outer track to building structure.
3. Connect vertical deflection clips to infill studs and anchor to building structure.
4. Connect drift clips to cold-formed steel framing and anchor to building structure.

E. Install horizontal bridging in wall studs, spaced vertically in rows indicated on Shop Drawings but not more than 48 inches apart. Fasten at each stud intersection.

1. Channel Bridging: Cold-rolled steel channel, welded or mechanically fastened to webs of punched studs.
2. Strap Bridging: Combination of flat, taut, steel sheet straps of width and thickness indicated and stud-track solid blocking of width and thickness to match studs. Fasten flat straps to stud flanges and secure solid blocking to stud webs or flanges.
3. Bar Bridging: Proprietary bridging bars installed according to manufacturer's written instructions.

Copyright © 2025 by the American Institute of Architects. Warning: This AIA MasterSpec-based document is protected by U.S. Copyright Law and International Treaties. It was created by "Michael Shilale Architects, LLP" for "Renovation of Rockland Green Administrative Headquarters and Construction of an Immersive Theatre Experience". A valid, current MasterSpec license is required for editing and use of this document for any other project.(22360)

F. Top Bridging for Single Deflection Track: Install row of horizontal bridging within 12 inches of single deflection track. Install a combination of bridging and stud or stud-track solid blocking of width and thickness matching studs, secured to stud webs or flanges.

1. Install solid blocking at 96-inch centers centers indicated on Shop Drawings.

G. Install miscellaneous framing and connections, including stud kickers, web stiffeners, clip angles, continuous angles, anchors, and fasteners, to provide a complete and stable wall-framing system.

3.5 INSTALLATION OF INTERIOR NONLOADBEARING WALL FRAMING

A. Install continuous tracks sized to match studs. Align tracks accurately and securely anchor to supporting structure.

B. Fasten both flanges of studs to top and bottom track unless otherwise indicated. Space studs as follows:

1. Stud Spacing: 16 inches .

C. Set studs plumb, except as needed for diagonal bracing or required for nonplumb walls or warped surfaces and similar requirements.

D. Isolate non-load-bearing steel framing from building structure to prevent transfer of vertical loads while providing lateral support.

1. Install single deep-leg deflection tracks and anchor to building structure.
2. Install double deep-leg deflection tracks and anchor outer track to building structure.
3. Connect vertical deflection clips to studs and anchor to building structure.
4. Connect drift clips to cold-formed steel metal framing and anchor to building structure.

E. Install horizontal bridging in wall studs, spaced vertically in rows indicated on Shop Drawings but not more than 48 inches apart. Fasten at each stud intersection.

1. Channel Bridging: Cold-rolled steel channel, welded or mechanically fastened to webs of punched studs.
2. Strap Bridging: Combination of flat, taut, steel sheet straps of width and thickness indicated and stud-track solid blocking of width and thickness to match studs. Fasten flat straps to stud flanges and secure solid blocking to stud webs or flanges.
3. Bar Bridging: Proprietary bridging bars installed according to manufacturer's written instructions.

F. Top Bridging for Single Deflection Track: Install row of horizontal bridging within 12 inches of single deflection track. Install a combination of bridging and stud or stud-track solid blocking of width and thickness matching studs, secured to stud webs or flanges.

1. Install solid blocking at 96-inch centers centers indicated on Shop Drawings.

Copyright © 2025 by the American Institute of Architects. Warning: This AIA MasterSpec-based document is protected by U.S. Copyright Law and International Treaties. It was created by "Michael Shilale Architects, LLP" for "Renovation of Rockland Green Administrative Headquarters and Construction of an Immersive Theatre Experience". A valid, current MasterSpec license is required for editing and use of this document for any other project.(22360)

G. Install miscellaneous framing and connections, including stud kickers, web stiffeners, clip angles, continuous angles, anchors, and fasteners, to provide a complete and stable wall-framing system.

3.6 INSTALLATION OF JOIST FRAMING

A. Install perimeter joist track sized to match joists. Align and securely anchor or fasten track to supporting structure at corners, ends, and spacings indicated on Shop Drawings.

B. Install joists bearing on supporting frame, level, straight, and plumb; adjust to final position, brace, and reinforce. Fasten joists to both flanges of joist track.

1. Install joists over supporting frame with a minimum end bearing of 1-1/2 inches.
2. Reinforce ends and bearing points of joists with web stiffeners, end clips, joist hangers, steel clip angles, or steel-stud sections.

C. Space joists not more than 2 inches from abutting walls, and as follows:

1. Joist Spacing: 16 inches .

D. Frame openings with built-up joist headers, consisting of joist and joist track or another combination of connected joists if indicated.

E. Install bridging at intervals indicated on Shop Drawings. Fasten bridging at each joist intersection as follows:

1. Combination Bridging: Combination of flat, taut, steel sheet straps of width and thickness indicated and joist-track solid blocking of width and thickness indicated. Fasten flat straps to bottom flange of joists and secure solid blocking to joist webs.

F. Secure joists to load-bearing interior walls to prevent lateral movement of bottom flange.

G. Install miscellaneous joist framing and connections, including web stiffeners, closure pieces, clip angles, continuous angles, hold-down angles, anchors, and fasteners, to provide a complete and stable joist-framing assembly.

3.7 INSTALLATION TOLERANCES

A. Install cold-formed steel framing level, plumb, and true to line to a maximum allowable tolerance variation of 1/8 inch in 10 feet and as follows:

1. Space individual framing members no more than plus or minus 1/8 inch from plan location. Cumulative error are not to exceed minimum fastening requirements of sheathing or other finishing materials.

Copyright © 2025 by the American Institute of Architects. Warning: This AIA MasterSpec-based document is protected by U.S. Copyright Law and International Treaties. It was created by "Michael Shilale Architects, LLP" for "Renovation of Rockland Green Administrative Headquarters and Construction of an Immersive Theatre Experience". A valid, current MasterSpec license is required for editing and use of this document for any other project.(22360)

3.8 REPAIR

A. Galvanizing Repairs: Prepare and repair damaged galvanized coatings on fabricated and installed cold-formed steel framing with galvanized repair paint according to ASTM A780/A780M and manufacturer's written instructions.

3.9 FIELD QUALITY CONTROL

A. Testing: Owner will engage a qualified independent testing and inspecting agency to perform field tests and inspections and prepare test reports.

B. Field and shop welds will be subject to testing and inspecting.

C. Testing agency will report test results promptly and in writing to Contractor and Architect.

D. Cold-formed steel framing will be considered defective if it does not pass tests and inspections.

E. Additional testing and inspecting, at Contractor's expense, will be performed to determine compliance of replaced or additional work with specified requirements.

3.10 PROTECTION

A. Provide final protection and maintain conditions, in a manner acceptable to manufacturer and Installer, that ensure that cold-formed steel framing is without damage or deterioration at time of Substantial Completion.

END OF SECTION 054000

Copyright © 2025 by the American Institute of Architects. Warning: This AIA MasterSpec-based document is protected by U.S. Copyright Law and International Treaties. It was created by "Michael Shilale Architects, LLP" for "Renovation of Rockland Green Administrative Headquarters and Construction of an Immersive Theatre Experience". A valid, current MasterSpec license is required for editing and use of this document for any other project.(22360)

SECTION 055213 - PIPE AND TUBE RAILINGS

PART 1 - GENERAL

1.1 SUMMARY

A. Section Includes:

1. Aluminum railings.

1.2 COORDINATION

A. Coordinate selection of shop primers with topcoats to be applied over them. Comply with paint and coating manufacturers' written recommendations to ensure that shop primers and topcoats are compatible with one another.

B. Coordinate installation of anchorages for railings. Furnish setting drawings, templates, and directions for installing anchorages, including sleeves, concrete inserts, anchor bolts, and items with integral anchors, that are to be embedded in concrete or masonry. Deliver such items to Project site in time for installation.

1.3 ACTION SUBMITTALS

A. Product Data:

1. Manufacturer's product lines of mechanically connected railings.
2. Expanded metal infill panels.
3. Perforated metal infill panels.
4. Woven-wire mesh infill panels.
5. Fasteners.
6. Post-installed anchors.
7. Handrail brackets.
8. Shop primer.
9. Intermediate coats and topcoats.
10. Bituminous paint.
11. Nonshrink, nonmetallic grout.
12. Anchoring cement.
13. Metal finishes.
14. Paint products.

B. Shop Drawings: Include plans, elevations, sections, details, and attachments to other work.

C. Samples for Initial Selection: For products involving selection of color, texture, or design , including mechanical finishes.

Copyright © 2025 by the American Institute of Architects. Warning: This AIA MasterSpec-based document is protected by U.S. Copyright Law and International Treaties. It was created by "Michael Shilale Architects, LLP" for "Renovation of Rockland Green Administrative Headquarters and Construction of an Immersive Theatre Experience". A valid, current MasterSpec license is required for editing and use of this document for any other project.(22360)

D. Samples for Verification: For each type of exposed finish required.

1. Sections of each distinctly different linear railing member, including handrails, top rails, posts, and balusters, including finish.
2. Fittings and brackets.
3. Assembled Sample of railing system, made from full-size components, including top rail, post, handrail, and infill. Sample need not be full height.
   a. Show method of connecting and finishing members at intersections.

E. Delegated Design Submittal: For railings, including analysis data signed and sealed by the qualified professional engineer responsible for their preparation.

1.4 INFORMATIONAL SUBMITTALS

A. Welding certificates.

B. Mill Certificates: Signed by manufacturers of stainless steel products, certifying that products furnished comply with requirements.

1.5 QUALITY ASSURANCE

A. Welding Qualifications: Qualify procedures and personnel in accordance with the following:

1. AWS D1.1/D1.1M, "Structural Welding Code - Steel."
2. AWS D1.2/D1.2M, "Structural Welding Code - Aluminum."

1.6 DELIVERY, STORAGE, AND HANDLING

A. Protect mechanical finishes on exposed surfaces of railings from damage by applying a strippable, temporary protective covering before shipping.

1.7 FIELD CONDITIONS

A. Field Measurements: Verify actual locations of walls and other construction contiguous with railings by field measurements before fabrication.

PART 2 - PRODUCTS

2.1 PERFORMANCE REQUIREMENTS

A. Delegated Design: Engage a qualified professional engineer, as defined in Section 014000 "Quality Requirements," to design railings, including attachment to building construction.

Copyright © 2025 by the American Institute of Architects. Warning: This AIA MasterSpec-based document is protected by U.S. Copyright Law and International Treaties. It was created by "Michael Shilale Architects, LLP" for "Renovation of Rockland Green Administrative Headquarters and Construction of an Immersive Theatre Experience". A valid, current MasterSpec license is required for editing and use of this document for any other project.(22360)

B. Structural Performance: Railings, including attachment to building construction, withstand the effects of gravity loads and the following loads and stresses within limits and under conditions indicated:

1. Handrails and Top Rails of Guards:
   a. Uniform load of 50 lbf/ ft. applied in any direction.
   b. Concentrated load of 200 lbf applied in any direction.
   c. Uniform and concentrated loads need not be assumed to act concurrently.
2. Infill of Guards:
   a. Concentrated load of 50 lbf applied horizontally on an area of 1 sq. ft..
   b. Infill load and other loads need not be assumed to act concurrently.

C. Thermal Movements: Allow for thermal movements from ambient and surface temperature changes.

1. Temperature Change: 120 deg F , ambient; 180 deg F , material surfaces .

2.2 METALS, GENERAL

A. Metal Surfaces, General: Provide materials with smooth surfaces, without seam marks, roller marks, rolled trade names, stains, discolorations, or blemishes.

B. Brackets, Flanges, and Anchors: Cast or formed metal of same type of material and finish as supported rails unless otherwise indicated.

1. Provide type of bracket with flange tapped for concealed anchorage to threaded hanger bolt and that provides 1-1/2-inch clearance from inside face of handrail to finished wall surface.

2.3 ALUMINUM RAILINGS

A. Manufacturers: Subject to compliance with requirements, provide products by one of the following:

1. Hollaender Mfg. Co.
2. Julius Blum & Co., Inc.
3. Superior Aluminum Products, Inc.

B. Source Limitations: Obtain each type of railing from single source from single manufacturer.

C. Aluminum, General: Provide alloy and temper recommended by aluminum producer and finisher for type of use and finish indicated, and with not less than the strength and durability properties of alloy and temper designated below for each aluminum form required.

D. Extruded Bars and Tubing: ASTM B221, Alloy 6063-T5/T52.

E. Extruded Structural Pipe and Round Tubing: ASTM B429/B429M, Alloy 6063-T6.

Copyright © 2025 by the American Institute of Architects. Warning: This AIA MasterSpec-based document is protected by U.S. Copyright Law and International Treaties. It was created by "Michael Shilale Architects, LLP" for "Renovation of Rockland Green Administrative Headquarters and Construction of an Immersive Theatre Experience". A valid, current MasterSpec license is required for editing and use of this document for any other project.(22360)

1. Provide Standard Weight (Schedule 40) pipe unless otherwise indicated.

2.4 FASTENERS

A. Fastener Materials:

1. Ungalvanized-Steel Railing Components: Plated steel fasteners complying with ASTM F1941/F1941M, Class Fe/Zn 5 for zinc coating.
2. Aluminum Railing Components: Type 304 stainless steel fasteners.

B. Fasteners for Anchoring Railings to Other Construction: Select fasteners of type, grade, and class required to produce connections suitable for anchoring railings to other types of construction and capable of withstanding design loads.

C. Fasteners for Interconnecting Railing Components:

1. Provide concealed fasteners for interconnecting railing components and for attaching them to other work, unless exposed fasteners are unavoidable or are the standard fastening method for railings indicated.
2. Provide tamper-resistant flat-head machine screws for exposed fasteners unless otherwise indicated.

D. Post-Installed Anchors: Fastener systems with working capacity greater than or equal to the design load, according to an evaluation report acceptable to authorities having jurisdiction, based on ICC-ES AC193 or ICC-ES AC308.

1. Material for Exterior Locations and Where Stainless Steel Is Indicated: Alloy Group 1 stainless steel bolts, ASTM F593, and nuts, ASTM F594.

2.5 MISCELLANEOUS MATERIALS

A. Handrail Brackets: Cast aluminum, center of handrail 2-1/2 inches from face of railing .

B. Welding Rods and Bare Electrodes: Select in accordance with AWS specifications for metal alloy welded.

1. For aluminum railings, provide type and alloy as recommended by producer of metal to be welded and as required for color match, strength, and compatibility in fabricated items.

C. Bituminous Paint: Cold-applied asphalt emulsion, complying with ASTM D1187/D1187M.

D. Nonshrink, Nonmetallic Grout: Factory-packaged, nonstaining, noncorrosive, nongaseous grout, complying with ASTM C1107/C1107M. Provide grout specifically recommended by manufacturer for interior and exterior applications.

Copyright © 2025 by the American Institute of Architects. Warning: This AIA MasterSpec-based document is protected by U.S. Copyright Law and International Treaties. It was created by "Michael Shilale Architects, LLP" for "Renovation of Rockland Green Administrative Headquarters and Construction of an Immersive Theatre Experience". A valid, current MasterSpec license is required for editing and use of this document for any other project.(22360)

E. Anchoring Cement: Factory-packaged, nonshrink, nonstaining, hydraulic-controlled expansion cement formulation for mixing with water at Project site to create pourable anchoring, patching, and grouting compound.

1. Water-Resistant Product: At exterior locations , provide formulation that is resistant to erosion from water exposure without needing protection by a sealer or waterproof coating and that is recommended by manufacturer for exterior use.

2.6 FABRICATION

A. General: Fabricate railings to comply with requirements indicated for design, dimensions, member sizes and spacing, details, finish, and anchorage , but not less than that required to support structural loads.

B. Shop assemble railings to greatest extent possible to minimize field splicing and assembly. Disassemble units only as necessary for shipping and handling limitations.

1. Clearly mark units for reassembly and coordinated installation.
2. Use connections that maintain structural value of joined pieces.

C. Cut, drill, and punch metals cleanly and accurately.

1. Remove burrs and ease edges to a radius of approximately 1/32 inch unless otherwise indicated.
2. Remove sharp or rough areas on exposed surfaces.

D. Form work true to line and level with accurate angles and surfaces.

E. Fabricate connections that are exposed to weather in a manner that excludes water.

1. Provide weep holes where water may accumulate.
2. Locate weep holes in inconspicuous locations.

F. Cut, reinforce, drill, and tap as indicated to receive finish hardware, screws, and similar items.

G. Connections: Fabricate railings with welded connections unless otherwise indicated.

H. Welded Connections: Cope components at connections to provide close fit, or use fittings designed for this purpose. Weld all around at connections, including at fittings.

1. Use materials and methods that minimize distortion and develop strength and corrosion resistance of base metals.
2. Obtain fusion without undercut or overlap.
3. Remove flux immediately.
4. At exposed connections, finish exposed welds to comply with NOMMA's "Voluntary Joint Finish Standards" for Finish #2 welds; good appearance, completely sanded joint, some undercutting and pinholes okay .

Copyright © 2025 by the American Institute of Architects. Warning: This AIA MasterSpec-based document is protected by U.S. Copyright Law and International Treaties. It was created by "Michael Shilale Architects, LLP" for "Renovation of Rockland Green Administrative Headquarters and Construction of an Immersive Theatre Experience". A valid, current MasterSpec license is required for editing and use of this document for any other project.(22360)

I. Welded Connections for Aluminum Pipe: Fabricate railings to interconnect members with concealed internal welds that eliminate surface grinding, using manufacturer's standard system of sleeve and socket fittings.

J. Nonwelded Connections: Connect members with concealed mechanical fasteners and fittings. Fabricate members and fittings to produce flush, smooth, rigid, hairline joints.

1. Fabricate splice joints for field connection, using an epoxy structural adhesive, if this is manufacturer's standard splicing method.

K. Form changes in direction as follows:

1. By bending or by inserting prefabricated elbow fittings.
2. .
3. By bending to smallest radius that will not result in distortion of railing member.

L. Bend members in jigs to produce uniform curvature for each configuration required. Maintain cross section of member throughout entire bend without buckling, twisting, cracking, or otherwise deforming exposed surfaces of components.

M. Close exposed ends of hollow railing members with prefabricated cap and end fittings of same metal and finish as railings.

N. Provide wall returns at ends of wall-mounted handrails unless otherwise indicated. Close ends of returns unless clearance between end of rail and wall is 1/4 inch or less.

O. Brackets, Flanges, Fittings, and Anchors: Provide wall brackets, flanges, miscellaneous fittings, and anchors to interconnect railing members to other work unless otherwise indicated.

1. At brackets and fittings fastened to plaster or gypsum board partitions, provide crush-resistant fillers or other means to transfer loads through wall finishes to structural supports and prevent bracket or fitting rotation and crushing of substrate.

P. Provide inserts and other anchorage devices for connecting railings to concrete or masonry work.

1. Fabricate anchorage devices capable of withstanding loads imposed by railings.
2. Coordinate anchorage devices with supporting structure.

Q. For railing posts set in concrete, provide stainless steel sleeves not less than 6 inches long with inside dimensions not less than 1/2 inch greater than outside dimensions of post, with metal plate forming bottom closure.

R. Toe Boards: Where indicated, provide toe boards at railings around openings and at edge of open-sided floors and platforms. Fabricate to dimensions and details indicated.

Copyright © 2025 by the American Institute of Architects. Warning: This AIA MasterSpec-based document is protected by U.S. Copyright Law and International Treaties. It was created by "Michael Shilale Architects, LLP" for "Renovation of Rockland Green Administrative Headquarters and Construction of an Immersive Theatre Experience". A valid, current MasterSpec license is required for editing and use of this document for any other project.(22360)

2.7 ALUMINUM FINISHES

A. Appearance of Finished Work: Variations in appearance of abutting or adjacent pieces are acceptable if they are within one-half of the range of approved Samples. Noticeable variations in the same piece are unacceptable. Variations in appearance of other components are acceptable if they are within the range of approved Samples and are assembled or installed to minimize contrast.

B. Mill Finish: AA-M12, nonspecular as fabricated.

C. Clear Anodic Finish: AAMA 611, AA-M12C22A41 .

PART 3 - EXECUTION

3.1 EXAMINATION

A. Examine plaster and gypsum board assemblies, where reinforced to receive anchors, to verify that locations of concealed reinforcements are clearly marked for Installer. Locate reinforcements and mark locations if not already done.

3.2 INSTALLATION, GENERAL

A. Perform cutting, drilling, and fitting required for installing railings.

1. Fit exposed connections together to form tight, hairline joints.
2. Install railings level, plumb, square, true to line; without distortion, warp, or rack.
3. Set railings accurately in location, alignment, and elevation; measured from established lines and levels.
4. Do not weld, cut, or abrade surfaces of railing components that are coated or finished after fabrication and that are intended for field connection by mechanical or other means without further cutting or fitting.
5. Set posts plumb within a tolerance of 1/16 inch in 3 feet.
6. Align rails so variations from level for horizontal members and variations from parallel with rake of steps and ramps for sloping members do not exceed 1/4 inch in 12 feet.

B. Control of Corrosion: Prevent galvanic action and other forms of corrosion by insulating metals and other materials from direct contact with incompatible materials.

1. Coat concealed surfaces of aluminum that will be in contact with grout, concrete, masonry, wood, or dissimilar metals, with a heavy coat of bituminous paint.

C. Adjust railings before anchoring to ensure matching alignment at abutting joints.

D. Fastening to In-Place Construction: Use anchorage devices and fasteners where necessary for securing railings and for properly transferring loads to in-place construction.

Copyright © 2025 by the American Institute of Architects. Warning: This AIA MasterSpec-based document is protected by U.S. Copyright Law and International Treaties. It was created by "Michael Shilale Architects, LLP" for "Renovation of Rockland Green Administrative Headquarters and Construction of an Immersive Theatre Experience". A valid, current MasterSpec license is required for editing and use of this document for any other project.(22360)

3.3 RAILING CONNECTIONS

A. Welded Connections: Use fully welded joints for permanently connecting railing components. Comply with requirements for welded connections in "Fabrication" Article, whether welding is performed in the shop or in the field.

B. Expansion Joints: Install expansion joints at locations indicated but not farther apart than required to accommodate thermal movement. Provide slip-joint internal sleeve, extending 2 inches beyond joint on either side; fasten internal sleeve securely to one side; and locate joint within 6 inches of post.

3.4 ANCHORING POSTS

A. Use stainless steel pipe sleeves preset and anchored into concrete for installing posts. After posts are inserted into sleeves, fill annular space between post and sleeve with nonshrink, nonmetallic grout , mixed and placed to comply with anchoring material manufacturer's written instructions.

B. Form or core-drill holes not less than 5 inches deep and 3/4 inch larger than OD of post for installing posts in concrete. Clean holes of loose material, insert posts, and fill annular space between post and concrete with nonshrink, nonmetallic grout , mixed and placed to comply with anchoring material manufacturer's written instructions.

C. Cover anchorage joint with flange of same metal as post, welded to post after placing anchoring material .

D. Leave anchorage joint exposed with 1/8-inch buildup, sloped away from post .

3.5 ATTACHING RAILINGS

A. Anchor railing ends to concrete and masonry with sleeves concealed within railing ends and anchored to wall construction with anchors and bolts.

B. Anchor railing ends to metal surfaces with flanges bolted to metal surfaces and connected to railing ends, using nonwelded connections.

C. Attach handrails to walls with wall brackets , except where end flanges are used. Provide brackets with 1-1/2-inch clearance from inside face of handrail and finished wall surface.

1. Use type of bracket with flange tapped for concealed anchorage to threaded hanger bolt .
2. Locate brackets as indicated or, if not indicated, at spacing required to support structural loads.

D. Secure wall brackets and railing end flanges to building construction as follows:

1. For concrete and solid masonry anchorage, use drilled-in expansion shields and hanger or lag bolts.

Copyright © 2025 by the American Institute of Architects. Warning: This AIA MasterSpec-based document is protected by U.S. Copyright Law and International Treaties. It was created by "Michael Shilale Architects, LLP" for "Renovation of Rockland Green Administrative Headquarters and Construction of an Immersive Theatre Experience". A valid, current MasterSpec license is required for editing and use of this document for any other project.(22360)

E. Install railing gates level, plumb, and secure for full opening without interference.

1. Attach hardware using tamper-resistant or concealed means.
2. Adjust hardware for smooth operation.

3.6 REPAIR

A. Touchup Painting:

1. Cleaning and touchup painting of field welds, bolted connections, and abraded areas of shop paint are specified in

3.7 CLEANING

A. Clean aluminum by washing thoroughly with clean water and soap and rinsing with clean water.

B. Galvanized Surfaces: Clean field welds, bolted connections, and abraded areas, and repair galvanizing to comply with ASTM A780/A780M.

3.8 PROTECTION

A. Protect finishes of railings from damage during construction period with temporary protective coverings approved by railing manufacturer. Remove protective coverings at time of Substantial Completion.

B. Restore finishes damaged during installation and construction period, so no evidence remains of correction work. Return items that cannot be refinished in the field to the shop; make required alterations and refinish entire unit, or provide new units.

END OF SECTION 055213

Copyright © 2025 by the American Institute of Architects. Warning: This AIA MasterSpec-based document is protected by U.S. Copyright Law and International Treaties. It was created by "Michael Shilale Architects, LLP" for "Renovation of Rockland Green Administrative Headquarters and Construction of an Immersive Theatre Experience". A valid, current MasterSpec license is required for editing and use of this document for any other project.(22360)

SECTION 061000 - ROUGH CARPENTRY

PART 1 - GENERAL

1.1 SUMMARY

A. Section Includes:

1. Framing with dimension lumber.
2. Framing with timber.
3. Framing with engineered wood products.
4. Shear wall panels.
5. Rooftop equipment bases and support curbs.
6. Wood blocking [**, cants,**] and nailers.
7. Wood furring [**and grounds**].
8. Wood sleepers.
9. Utility shelving.
10. Plywood backing panels.

B. Related Requirements:

1. Section 061300 "Heavy Timber Construction."
2. Section 061533 "Wood Patio Decking" for elevated decks, including support framing.
3. Section 061600 "Sheathing" for sheathing, subflooring, and underlayment.
4. Section 061753 "Shop-Fabricated Wood Trusses" for wood trusses made from dimension lumber.
5. Section 064013 "Exterior Architectural Woodwork" for exterior wood stairs and railings.
6. Section 064023 "Interior Architectural Woodwork" for interior wood stairs and railings.
7. Section 313116 "Termite Control" for site application of borate treatment to wood framing.

1.2 DEFINITIONS

A. Boards or Strips: Lumber of less than 2 inches nominal size in least dimension.

B. Dimension Lumber: Lumber of 2 inches nominal size or greater but less than 5 inches nominal size in least dimension.

C. Exposed Framing: Framing not concealed by other construction.

D. OSB: Oriented strand board.

E. Timber: Lumber of 5 inches nominal size or greater in least dimension.

F. Lumber grading agencies, and abbreviations used to reference them, include the following:

Copyright © 2025 by the American Institute of Architects. Warning: This AIA MasterSpec-based document is protected by U.S. Copyright Law and International Treaties. It was created by "Michael Shilale Architects, LLP" for "Renovation of Rockland Green Administrative Headquarters and Construction of an Immersive Theatre Experience". A valid, current MasterSpec license is required for editing and use of this document for any other project.(22360)

1. NeLMA: Northeastern Lumber Manufacturers' Association.
2. NLGA: National Lumber Grades Authority.
3. SPIB: The Southern Pine Inspection Bureau.
4. WCLIB: West Coast Lumber Inspection Bureau.
5. WWPA: Western Wood Products Association.

1.3 ACTION SUBMITTALS

A. Product Data: For each type of process and factory-fabricated product. Indicate component materials and dimensions and include construction and application details.

1. Include data for wood-preservative treatment from chemical treatment manufacturer and certification by treating plant that treated materials comply with requirements. Indicate type of preservative used and net amount of preservative retained.
2. Include data for fire-retardant treatment from chemical treatment manufacturer and certification by treating plant that treated materials comply with requirements. Include physical properties of treated materials based on testing by a qualified independent testing agency.
3. For fire-retardant treatments, include physical properties of treated lumber both before and after exposure to elevated temperatures, based on testing by a qualified independent testing agency according to ASTM D5664.
4. For products receiving a waterborne treatment, include statement that moisture content of treated materials was reduced to levels specified before shipment to Project site.

B. Sustainable Design Submittals:

1. <Click to insert sustainable design text for regional materials.>
2. <Click to insert sustainable design text for certified wood.>
3. <Click to insert sustainable design text for certified wood.>
4. <Click to insert sustainable design text for composite wood.>
5. <Click to insert sustainable design text for installation adhesives.>

C. Fastener Patterns: Full-size templates for fasteners in exposed framing.

1.4 INFORMATIONAL SUBMITTALS

A. Material Certificates:

1. For dimension lumber specified to comply with minimum allowable unit stresses. Indicate species and grade selected for each use and design values approved by the ALSC Board of Review.

B. Reports: For the following, from ICC-ES:

1. Wood-preservative-treated wood.
2. Fire-retardant-treated wood.
3. Engineered wood products.
4. Shear panels.

Copyright © 2025 by the American Institute of Architects. Warning: This AIA MasterSpec-based document is protected by U.S. Copyright Law and International Treaties. It was created by "Michael Shilale Architects, LLP" for "Renovation of Rockland Green Administrative Headquarters and Construction of an Immersive Theatre Experience". A valid, current MasterSpec license is required for editing and use of this document for any other project.(22360)

5. Power-driven fasteners.
6. Post-installed anchors.
7. Metal framing anchors.
8. Sill sealer gasket/termite barrier.

C. Qualification Statements: For testing agency providing classification marking for fire-retardant treated material, an inspection agency acceptable to authorities having jurisdiction that periodically performs inspections to verify that the material bearing the classification marking is representative of the material tested.

1.5 QUALITY ASSURANCE

A. <Click to insert sustainable design text for manufacturer qualifications.>

B. <Click to insert sustainable design text for vendor qualifications.>

1.6 DELIVERY, STORAGE, AND HANDLING

A. Stack wood products flat with spacers beneath and between each bundle to provide air circulation. Protect wood products from weather by covering with waterproof sheeting, securely anchored. Provide for air circulation around stacks and under coverings.

PART 2 - PRODUCTS

2.1 WOOD PRODUCTS, GENERAL

A. <Click to insert sustainable design text for regional materials.>

B. <Click to insert sustainable design text for certified wood.>

C. Lumber: Comply with DOC PS 20 and applicable rules of grading agencies indicated. If no grading agency is indicated, comply with the applicable rules of any rules-writing agency certified by the ALSC Board of Review. Grade lumber by an agency certified by the ALSC Board of Review to inspect and grade lumber under the rules indicated.

1. Factory mark each piece of lumber with grade stamp of grading agency.
2. For exposed lumber indicated to receive a stained or natural finish, [**mark grade stamp on end or back of each piece**] [**or**] [**omit grade stamp and provide certificates of grade compliance issued by grading agency**].
3. Where nominal sizes are indicated, provide actual sizes required by DOC PS 20 for moisture content specified. Where actual sizes are indicated, they are minimum dressed sizes for dry wood products.
4. Dress lumber, S4S, unless otherwise indicated.

D. Maximum Moisture Content of Lumber:

Copyright © 2025 by the American Institute of Architects. Warning: This AIA MasterSpec-based document is protected by U.S. Copyright Law and International Treaties. It was created by "Michael Shilale Architects, LLP" for "Renovation of Rockland Green Administrative Headquarters and Construction of an Immersive Theatre Experience". A valid, current MasterSpec license is required for editing and use of this document for any other project.(22360)

1. Boards: [**15**] [**19**] percent.
2. Dimension Lumber: [**15 percent**] [**19 percent**] [**15 percent for 2-inch nominal thickness or less; 19 percent for more than 2-inch nominal thickness**] [**15 percent for 2-inch nominal thickness or less; no limit for more than 2-inch nominal thickness**] [**19 percent for 2-inch nominal thickness or less; no limit for more than 2-inch nominal thickness**] unless otherwise indicated.
3. Timber. [**19 percent**] [**No limit**].

E. Engineered Wood Products: Acceptable to authorities having jurisdiction and for which current model code research or evaluation reports exist that show compliance with building code in effect for Project.

1. Allowable design stresses, as published by manufacturer, are to meet or exceed those indicated. Manufacturer's published values are to be determined from empirical data or by rational engineering analysis and demonstrated by comprehensive testing performed by a qualified independent testing agency.

2.2 PRESERVATIVE TREATMENT

A. Preservative Treatment by Pressure Process: AWPA U1; Use Category UC2 [**for interior construction not in contact with ground, Use Category UC3b for exterior construction not in contact with ground, and Use Category UC4a for items in contact with ground**].

1. Preservative Chemicals: Acceptable to authorities having jurisdiction and containing no arsenic or chromium. [**Do not use inorganic boron (SBX) for sill plates.**]
2. For exposed items indicated to receive a stained or natural finish, chemical formulations are not to require incising, contain colorants, bleed through, or otherwise adversely affect finishes.
3. After treatment, redry [**boards**] [**dimension lumber**] to 19 percent maximum moisture content.

B. Kiln-dry lumber after treatment to a maximum moisture content of 19 percent. Do not use material that is warped or that does not comply with requirements for untreated material.

C. Mark lumber with treatment quality mark of an inspection agency approved by the ALSC Board of Review.

1. For exposed lumber indicated to receive a stained or natural finish, [**mark end or back of each piece**] [**or**] [**omit marking and provide certificates of treatment compliance issued by inspection agency**].

D. Application: Treat [**all rough carpentry unless otherwise indicated.**] [**items indicated on Drawings, and the following:**]

1. Wood cants, nailers, curbs, equipment support bases, blocking, stripping, and similar members in connection with roofing, flashing, vapor barriers, and waterproofing.
2. Wood sills, sleepers, blocking, [**furring,**] [**stripping,**] and similar concealed members in contact with masonry or concrete.

Copyright © 2025 by the American Institute of Architects. Warning: This AIA MasterSpec-based document is protected by U.S. Copyright Law and International Treaties. It was created by "Michael Shilale Architects, LLP" for "Renovation of Rockland Green Administrative Headquarters and Construction of an Immersive Theatre Experience". A valid, current MasterSpec license is required for editing and use of this document for any other project.(22360)

3. Wood framing and furring attached directly to the interior of below-grade exterior masonry or concrete walls.
4. Wood framing members that are less than 18 inches above the ground in crawlspaces or unexcavated areas.
5. Wood floor plates that are installed over concrete slabs-on-grade.
6. <**Insert item>**.

2.3 FIRE-RETARDANT TREATMENT

A. General: Where fire-retardant-treated materials are indicated, materials are to comply with requirements in this article, that are acceptable to authorities having jurisdiction, and with fire-test-response characteristics specified as determined by testing identical products per test method indicated by a qualified testing agency.

B. Fire-Retardant-Treated Lumber and Plywood by Pressure Process: Products with a flame-spread index of 25 or less when tested according to ASTM E84, and with no evidence of significant progressive combustion when the test is extended an additional 20 minutes, and with the flame front not extending more than 10.5 feet beyond the centerline of the burners at any time during the test.

1. Treatment is not to promote corrosion of metal fasteners.
2. Exterior Type: Treated materials are to comply with requirements specified above for fire-retardant-treated lumber and plywood by pressure process after being subjected to accelerated weathering according to ASTM D2898. Use for exterior locations and where indicated.
3. Interior Type A: Treated materials are to have a moisture content of 28 percent or less when tested according to ASTM D3201/D3201M at 92 percent relative humidity. Use where exterior type is not indicated.
4. Design Value Adjustment Factors: Treated lumber is to be tested according to ASTM D5664 and design value adjustment factors are to be calculated according to ASTM D6841. [**For enclosed roof framing, framing in attic spaces, and where high temperature fire-retardant treatment is indicated, provide material with adjustment factors of not less than 0.85 modulus of elasticity and 0.75 for extreme fiber in bending for Project's climatological zone.**]

C. Kiln-dry lumber after treatment to maximum moisture content of 19 percent. [**Kiln-dry plywood after treatment to maximum moisture content of 15 percent.**]

D. Identify fire-retardant-treated wood with appropriate classification marking of qualified testing agency.

1. For exposed lumber indicated to receive a stained or natural finish, [**mark end or back of each piece**] [**or**] [**omit marking and provide certificates of treatment compliance issued by testing agency**].

E. For exposed items indicated to receive a stained or natural finish, chemical formulations are not to bleed through, contain colorants, or otherwise adversely affect finishes.

Copyright © 2025 by the American Institute of Architects. Warning: This AIA MasterSpec-based document is protected by U.S. Copyright Law and International Treaties. It was created by "Michael Shilale Architects, LLP" for "Renovation of Rockland Green Administrative Headquarters and Construction of an Immersive Theatre Experience". A valid, current MasterSpec license is required for editing and use of this document for any other project.(22360)

F. Application: Treat [**all rough carpentry unless otherwise indicated.**] [**items indicated on Drawings, and the following:**]

1. Framing for raised platforms.
2. Framing for stages.
3. Concealed blocking.
4. Framing for non-load-bearing partitions.
5. Framing for non-load-bearing exterior walls.
6. Roof construction.
7. Plywood backing panels.
8. <**Insert item>**.

2.4 DIMENSION LUMBER FRAMING

A. Non-Load-Bearing Interior Partitions by Grade: [**Construction or No. 2**] [**Construction, Stud, or No. 3**] [**Standard, Stud, or No. 3**] grade.

1. Application: [**All interior partitions**] [**Interior partitions not indicated as load bearing**].
2. Species:
   a. Hem-fir (north); NLGA.
   b. Southern pine or mixed southern pine; SPIB.
   c. Spruce-pine-fir; NLGA.
   d. Hem-fir; WCLIB, or WWPA.
   e. Spruce-pine-fir (south); NeLMA, WCLIB, or WWPA.
   f. Northern species; NLGA.
   g. Eastern softwoods; NeLMA.
   h. Western woods; WCLIB or WWPA.

B. Load-Bearing Partitions by Grade: [**No. 2**] [**Construction or No. 2**] [**Construction, Stud, or No. 3**] grade.

1. Application: [**Exterior walls**] [**and**] [**interior load-bearing partitions**].
2. Species:
   a. Hem-fir (north); NLGA.
   b. Southern pine; SPIB.
   c. Douglas fir-larch; WCLIB or WWPA.
   d. Southern pine or mixed southern pine; SPIB.
   e. Spruce-pine-fir; NLGA.
   f. Douglas fir-south; WWPA.
   g. Hem-fir; WCLIB or WWPA.
   h. Douglas fir-larch (north); NLGA.
   i. Spruce-pine-fir (south); NeLMA, WCLIB, or WWPA.

C. Machine Stress-Rated (MSR) Lumber Partitions: Any species of MSR dimension lumber with a grade of not less than [**2400f-2.0E**] [**2100f-1.8E**] [**1650f-1.5E**] <**Insert grade>**.

1. Application: [**Exterior walls**] [**and**] [**interior load-bearing partitions**].

Copyright © 2025 by the American Institute of Architects. Warning: This AIA MasterSpec-based document is protected by U.S. Copyright Law and International Treaties. It was created by "Michael Shilale Architects, LLP" for "Renovation of Rockland Green Administrative Headquarters and Construction of an Immersive Theatre Experience". A valid, current MasterSpec license is required for editing and use of this document for any other project.(22360)

D. Load-Bearing Partitions by Performance: Any species and grade with a modulus of elasticity of at least [**1,500,000 psi**] [**1,300,000 psi**] [**1,100,000 psi**] [**1,000,000 psi**] [**900,000 psi**] and an extreme fiber stress in bending of at least [**1000 psi**] [**850 psi**] [**700 psi**] [**600 psi**] [**500 psi**] for 2-inch nominal thickness and 12-inch nominal width for single-member use.

1. Application: [**Exterior walls**] [**and**] [**interior load-bearing partitions**].

E. Ceiling Joists: [**Construction or No. 2**] [**Construction, Stud, or No. 3**] [**Standard, Stud, or No. 3**] grade.

1. Species:
   a. Hem-fir (north); NLGA.
   b. Southern pine; SPIB.
   c. Douglas fir-larch; WCLIB or WWPA.
   d. Douglas fir-larch (north); NLGA.
   e. Southern pine or mixed southern pine; SPIB.
   f. Spruce-pine-fir; NLGA.
   g. Hem-fir; WCLIB or WWPA.
   h. Douglas fir-south; WWPA.
   i. Spruce-pine-fir (south); NeLMA, WCLIB, or WWPA.
   j. Northern species; NLGA.
   k. Eastern softwoods; NeLMA.
   l. Western woods; WCLIB or WWPA.

F. Joists, Rafters, and Other Framing by Grade: [**Select Structural**] [**No. 1**] [**No. 2**] [**Construction or No. 2**] [**Construction, Stud, or No. 3**] grade.

1. Species:
   a. Hem-fir (north); NLGA.
   b. Southern pine; SPIB.
   c. Douglas fir-larch; WCLIB or WWPA.
   d. Southern pine or mixed southern pine; SPIB.
   e. Spruce-pine-fir; NLGA.
   f. Douglas fir-south; WWPA.
   g. Hem-fir; WCLIB or WWPA.
   h. Douglas fir-larch (north); NLGA.
   i. Spruce-pine-fir (south); NeLMA, WCLIB, or WWPA.

G. Joists, Rafters, and Other Framing by Performance: Any species and grade with a modulus of elasticity of at least [**1,500,000 psi**] [**1,300,000 psi**] [**1,100,000 psi**] [**1,000,000 psi**] [**900,000 psi**] and an extreme fiber stress in bending of at least [**1000 psi**] [**850 psi**] [**700 psi**] [**600 psi**] [**500 psi**] for 2-inch nominal thickness and 12-inch nominal width for single-member use.

H. Exposed Framing [**Indicated to Receive a Stained or Natural Finish**]: Hand-select material for uniformity of appearance and freedom from characteristics, on exposed surfaces and edges, that would impair finish appearance, including decay, honeycomb, knot-holes, shake, splits, torn grain, and wane.

1. Species and Grade:
   a. As indicated above for load-bearing construction of same type.

Copyright © 2025 by the American Institute of Architects. Warning: This AIA MasterSpec-based document is protected by U.S. Copyright Law and International Treaties. It was created by "Michael Shilale Architects, LLP" for "Renovation of Rockland Green Administrative Headquarters and Construction of an Immersive Theatre Experience". A valid, current MasterSpec license is required for editing and use of this document for any other project.(22360)

b. Hem-fir (north); [**Select Structural**] [**No. 1**] grade; NLGA.
c. Southern pine; [**Select Structural**] [**No. 1**] [**No. 2**] grade; SPIB.
d. Douglas fir-larch; [**Select Structural**] [**No. 1**] grade; WCLIB or WWPA.
e. Mixed southern pine; [**Select Structural**] [**No. 1**] [**No. 2**] grade; SPIB.
f. Spruce-pine-fir; [**Select Structural**] [**No. 1**] grade; NLGA.
g. Douglas fir-south; [**Select Structural**] [**No. 1**] grade; WWPA.
h. Hem-fir; [**Select Structural**] [**No. 1**] grade; WCLIB or WWPA.
i. Douglas fir-larch (north); [**Select Structural**] [**No. 1**] grade; NLGA.
j. Spruce-pine-fir (south); [**Select Structural**] [**No. 1**] grade; NeLMA, WCLIB, or WWPA.
k. Eastern hemlock-balsam fir or eastern hemlock-tamarack; [**Select Structural**] [**No. 1**] grade; NeLMA.
l. Beech-birch-hickory; [**Select Structural**] [**No. 1**] grade; NeLMA.
m. Northern red oak; [**Select Structural**] [**No. 1**] grade; NeLMA.
n. Redwood; [**Clear Heart Structural**] [**Clear Structural**] [**Select Structural**] [**No. 1**] grade; RIS.
o. Mixed oak; [**Select Structural**] [**No. 1**] grade; NeLMA.
p. Mixed maple; [**Select Structural**] [**No. 1**] grade; NeLMA.
q. Western cedars; [**Select Structural**] [**No. 1**] grade; WCLIB or WWPA.

2.5 TIMBER FRAMING

A. Comply with the following requirements, according to grading rules of grading agency indicated:

1. Species and Grade:
   a. Douglas fir-larch, Douglas fir-larch (north), or Douglas fir-south; [**Select Structural**] [**No. 1**] grade; NLGA, WCLIB, or WWPA.
   b. Eastern hemlock, eastern hemlock-tamarack, or eastern hemlock-tamarack (north); [**Select Structural**] [**No. 1**] grade; NeLMA or NLGA.
   c. Hem-fir or hem-fir (north); [**Select Structural**] [**No. 1**] grade; NLGA, WCLIB, or WWPA.
   d. Mixed maple; [**Select Structural**] [**No. 1**] grade; NeLMA.
   e. Mixed oak; [**Select Structural**] [**No. 1**] grade; NeLMA.
   f. Southern pine; [**Select Structural**] [**No. 1**] grade; SPIB.
2. Maximum Moisture Content: [**20**] [**23**] <**Insert number>** percent.
3. Additional Restriction: Free of heart centers.

2.6 ENGINEERED WOOD PRODUCTS

A. <Click to insert sustainable design text for composite wood products.>

B. Source Limitations: Obtain each type of engineered wood product from single source from a single manufacturer.

C. Laminated-Veneer Lumber: Structural composite lumber made from wood veneers with grain primarily parallel to member lengths, evaluated and monitored according to ASTM D5456 and manufactured with an exterior-type adhesive complying with ASTM D2559.

Copyright © 2025 by the American Institute of Architects. Warning: This AIA MasterSpec-based document is protected by U.S. Copyright Law and International Treaties. It was created by "Michael Shilale Architects, LLP" for "Renovation of Rockland Green Administrative Headquarters and Construction of an Immersive Theatre Experience". A valid, current MasterSpec license is required for editing and use of this document for any other project.(22360)

1. <Click here to find, evaluate, and insert list of manufacturers and products.>
2. Extreme Fiber Stress in Bending, Edgewise: [**3100 psi**] [**2900 psi**] [**2600 psi**] [**2250 psi**] <**Insert value>** for 12-inch nominal- depth members.
3. Modulus of Elasticity, Edgewise: [**2,000,000 psi**] [**1,800,000 psi**] [**1,500,000 psi**] <**Insert value>**.
4. Horizontal Shear: [**285 psi**] [**225 psi**] <**Insert value>**.
5. Tension Parallel to Grain: [**1950 psi**] [**1500 psi**] [**1100 psi**] <**Insert value>**.

D. Moisture Protection:

1. For western species (Douglas fir/hemlock), factory end and edge seal laminated veneer lumber with opaque moisture barrier.
2. For southern and eastern species (southern yellow pine, yellow poplar), factory seal laminated veneer lumber on face, edge, and ends.

E. Parallel-Strand Lumber: Structural composite lumber made from wood strand elements with grain primarily parallel to member lengths, evaluated and monitored according to ASTM D5456 and manufactured with an exterior-type adhesive complying with ASTM D2559.

1. <Click here to find, evaluate, and insert list of manufacturers and products.>
2. Extreme Fiber Stress in Bending, Edgewise: 2900 psi for 12-inch nominal- depth members.
3. Modulus of Elasticity, Edgewise: 2,200,000 psi.

F. Wood I-Joists: Prefabricated units, I-shaped in cross section, made with solid or structural composite lumber flanges and wood-based structural panel webs, let into and bonded to flanges. Comply with material requirements of and with structural capacities established and monitored according to ASTM D5055.

1. <Click here to find, evaluate, and insert list of manufacturers and products.>
2. Web Material: [**Either OSB or plywood, complying with DOC PS 1 or DOC PS 2, Exposure 1**] [**Plywood, complying with DOC PS 1 or DOC PS 2, Exposure 1**] [**Plywood, complying with DOC PS 1, Exterior grade**].
3. Structural Properties: Depths and design values not less than those indicated.
4. Comply with APA PRI-400. Factory mark I-joists with APA-EWS trademark indicating nominal joist depth, joist class, span ratings, mill identification, and compliance with APA-EWS standard.

G. Rim Boards: Product designed to be used as a load-bearing member and to brace wood I-joists at bearing ends, complying with research or evaluation report for I-joists.

1. Manufacturer: Provide products by same manufacturer as I-joists.
2. Material: [**All-veneer product**] [**glued-laminated wood**] [**or**] [**product made from any combination solid lumber, wood strands, and veneers**].
3. Thickness: [**1 inch**] [**1-1/8 inches**] [**1-1/4 inches**].
4. Comply with APA PRR-401, [**rim board**] [**rim board plus**] grade. Factory mark rim boards with APA-EWS trademark indicating thickness, grade, and compliance with APA-EWS standard.

Copyright © 2025 by the American Institute of Architects. Warning: This AIA MasterSpec-based document is protected by U.S. Copyright Law and International Treaties. It was created by "Michael Shilale Architects, LLP" for "Renovation of Rockland Green Administrative Headquarters and Construction of an Immersive Theatre Experience". A valid, current MasterSpec license is required for editing and use of this document for any other project.(22360)

H. Insulated Rim Boards: Insulated product designed to be used as a load-bearing member and to brace wood I-joists at bearing ends, complying with research/evaluation report for I-joists.

1. Manufacturer: Provide products by same manufacturer as I-joists.
2. Rim Board Material: [**All-veneer product**] [**glued-laminated wood**] [**or**] [**product made from any combination solid lumber, wood strands, and veneers**].
3. Rim Board Thickness: [**1 inch**] [**1-1/8 inches**] [**1-1/4 inches**].
4. Insulation: 1-1/2-inch- thick polyisocyanurate foam complying with ASTM C1289.
5. Inside Facing: 7/16-inch- thick OSB.
6. Comply with APA PRR-401, [**rim board**] [**rim board plus**] grade. Factory mark rim boards with APA-EWS trademark indicating thickness, grade, and compliance with APA-EWS standard.

2.7 SHEAR WALL PANELS

A. <Click here to find, evaluate, and insert list of manufacturers and products.>

B. Wood-Framed Shear Wall Panels: Prefabricated assembly consisting of wood perimeter framing, tie downs, and Exposure I, Structural I plywood or OSB sheathing.

C. Steel-Framed Shear Wall Panels: Prefabricated assembly consisting of cold-formed galvanized-steel panel, steel top and bottom plates, and wood studs.

D. Allowable design loads, as published by manufacturer, are to meet or exceed those [**indicated**] [**of basis-of-design products**] [**of products of manufacturers listed**]. Manufacturer's published values are to be determined from empirical data or by rational engineering analysis and demonstrated by comprehensive testing performed by a qualified independent testing agency.

2.8 MISCELLANEOUS LUMBER

A. Provide miscellaneous lumber indicated and lumber for support or attachment of other construction, including the following:

1. Blocking.
2. Nailers.
3. Rooftop equipment bases and support curbs.
4. Cants.
5. Furring.
6. Grounds.
7. Utility shelving.

B. Dimension Lumber Items: [**Construction or No. 2**] [**Standard, Stud, or No. 3**] grade lumber of [**any species.**] [**any of the following species:**] [**the following species:**]

1. Hem-fir (north); NLGA.
2. Mixed southern pine or southern pine; SPIB.
3. Spruce-pine-fir; NLGA.

Copyright © 2025 by the American Institute of Architects. Warning: This AIA MasterSpec-based document is protected by U.S. Copyright Law and International Treaties. It was created by "Michael Shilale Architects, LLP" for "Renovation of Rockland Green Administrative Headquarters and Construction of an Immersive Theatre Experience". A valid, current MasterSpec license is required for editing and use of this document for any other project.(22360)

4. Hem-fir; WCLIB or WWPA.
5. Spruce-pine-fir (south); NeLMA, WCLIB, or WWPA.
6. Western woods; WCLIB or WWPA.
7. Northern species; NLGA.
8. Eastern softwoods; NeLMA.

C. Utility Shelving: Lumber with [**15**] [**19**] percent maximum moisture content of [**any of the following**] [**the following**] species and grades:

1. Eastern white pine, Idaho white, lodgepole, ponderosa, or sugar pine; [**Premium or No. 2 Common (Sterling)**] [**Standard or No. 3 Common**] grade; NeLMA, NLGA, WCLIB, or WWPA.
2. Mixed southern pine or southern pine; No. [**1**] [**2**] grade; SPIB.
3. Hem-fir or hem-fir (north); [**Select Merchantable or No. 1 Common**] [**Construction or No. 2 Common**] grade; NLGA, WCLIB, or WWPA.
4. Spruce-pine-fir (south) or spruce-pine-fir; [**Select Merchantable or No. 1 Common**] [**Construction or No. 2 Common**] grade; NeLMA, NLGA, WCLIB, or WWPA.

D. Concealed Boards: [**15**] [**19**] percent maximum moisture content and [**any of**]the following species and grades:

1. Mixed southern pine or southern pine; No. [**2**] [**3**] grade; SPIB.
2. Hem-fir or hem-fir (north); [**Construction or No. 2 Common**] [**Standard or No. 3 Common**] grade; NLGA, WCLIB, or WWPA.
3. Spruce-pine-fir (south) or spruce-pine-fir; [**Construction or No. 2 Common**] [**Standard or No. 3 Common**] grade; NeLMA, NLGA, WCLIB, or WWPA.
4. Eastern softwoods; No. [**2**] [**3**] Common grade; NeLMA.
5. Northern species; No. [**2**] [**3**] Common grade; NLGA.
6. Western woods; [**Construction or No. 2 Common**] [**Standard or No. 3 Common**] grade; WCLIB or WWPA.

E. For blocking not used for attachment of other construction, Utility, Stud, or No. 3 grade lumber of any species may be used provided that it is cut and selected to eliminate defects that will interfere with its attachment and purpose.

F. For blocking and nailers used for attachment of other construction, select and cut lumber to eliminate knots and other defects that will interfere with attachment of other work.

G. For furring strips for installing plywood or hardboard paneling, select boards with no knots capable of producing bent-over nails and damage to paneling.

2.9 PLYWOOD BACKING PANELS

A. Equipment Backing Panels: Plywood, DOC PS 1, [**Exterior, A-C**] [**Exterior, C-C Plugged**] [**Exposure 1, C-D Plugged**] , [**fire-retardant treated,**] in thickness indicated or, if not indicated, not less than [**1/2-inch**] [**3/4-inch**] nominal thickness.

Copyright © 2025 by the American Institute of Architects. Warning: This AIA MasterSpec-based document is protected by U.S. Copyright Law and International Treaties. It was created by "Michael Shilale Architects, LLP" for "Renovation of Rockland Green Administrative Headquarters and Construction of an Immersive Theatre Experience". A valid, current MasterSpec license is required for editing and use of this document for any other project.(22360)

2.10 FASTENERS

A. General: Fasteners are to be of size and type indicated and comply with requirements specified in this article for material and manufacture. Provide nails or screws, in sufficient length, to penetrate not less than 1-1/2 inches into wood substrate.

1. Where rough carpentry is exposed to weather, in ground contact, pressure-preservative treated, or in area of high relative humidity, provide fasteners [**with hot-dip zinc coating complying with ASTM A153/A153M or ASTM F2329**] [**of Type 304 stainless steel**].
2. For pressure-preservative-treated wood, use stainless steel fasteners.
3. For redwood, use [**brass/bronze**] [**stainless steel**] [**hot-dip galvanized-steel**] fasteners.

B. Nails, Brads, and Staples: ASTM F1667.

C. Power-Driven Fasteners: Fastener systems with an evaluation report acceptable to authorities having jurisdiction, based on ICC-ES AC70.

D. Post-Installed Anchors: Fastener systems with an evaluation report acceptable to authorities having jurisdiction, based on [**ICC-ES AC01**] [**ICC-ES AC58**] [**ICC-ES AC193**] [**or**] [**ICC-ES AC308**] as appropriate for the substrate.

2.11 METAL FRAMING ANCHORS

A. <Click here to find, evaluate, and insert list of manufacturers and products.>

B. Allowable design loads, as published by manufacturer, are to meet or exceed those [**indicated**] [**of basis-of-design products**] [**of products of manufacturers listed**]. Manufacturer's published values are to be determined from empirical data or by rational engineering analysis and demonstrated by comprehensive testing performed by a qualified independent testing agency. Framing anchors are to be punched for fasteners adequate to withstand same loads as framing anchors.

C. Galvanized-Steel Sheet: Hot-dip, zinc-coated steel sheet complying with ASTM A653/A653M, G60 coating designation.

1. Use for interior locations unless otherwise indicated.

D. Hot-Dip, Heavy-Galvanized Steel Sheet: ASTM A653/A653M; structural steel (SS), high-strength low-alloy steel Type A (HSLAS Type A), or high-strength low-alloy steel Type B (HSLAS Type B); G185 coating designation; and not less than 0.036 inch thick.

1. Use for wood-preservative-treated lumber and where indicated.

E. Stainless Steel Sheet: ASTM A240/A240M or ASTM A666, [**Type 304**] [**Type 316**].

1. Use for exterior locations and where indicated.

F. Joist Hangers: U-shaped joist hangers with 2-inch- long seat and 1-1/4-inch- wide nailing flanges at least 85 percent of joist depth.

Copyright © 2025 by the American Institute of Architects. Warning: This AIA MasterSpec-based document is protected by U.S. Copyright Law and International Treaties. It was created by "Michael Shilale Architects, LLP" for "Renovation of Rockland Green Administrative Headquarters and Construction of an Immersive Theatre Experience". A valid, current MasterSpec license is required for editing and use of this document for any other project.(22360)

1. Thickness: [**0.050 inch**] [**0.062 inch**].

G. I-Joist Hangers: U-shaped joist hangers with 2-inch- long seat and 1-1/4-inch- wide nailing flanges full depth of joist. Nailing flanges provide lateral support at joist top chord.

1. Thickness: [**0.050 inch**] [**0.062 inch**].

H. Top Flange Hangers: U-shaped joist hangers, full depth of joist, formed from metal strap with tabs bent to extend over and be fastened to supporting member.

1. Strap Width: [**1-1/2 inches**] [**2 inches**].
2. Thickness: [**0.050 inch**] [**0.062 inch**].

I. Bridging: Rigid, V-section, nailless type, 0.050 inch thick, length to suit joist size and spacing.

J. Post Bases: Adjustable-socket type for bolting in place with standoff plate to raise post 1 inch above base and with 2-inch- minimum side cover, socket 0.062 inch thick, and standoff and adjustment plates 0.108 inch thick.

K. Joist Ties: Flat straps, with holes for fasteners, for tying joists together over supports.

1. Width: [**3/4 inch**] [**1-1/4 inches**].
2. Thickness: [**0.050 inch**] [**0.062 inch**].
3. Length: [**16 inches**] [**24 inches**] [**As indicated**].

L. Rafter Tie-Downs: Bent strap tie for fastening rafters or roof trusses to wall studs below, 1-1/2 inches wide by 0.050 inch thick. [**Tie fastens to side of rafter or truss, face of top plates, and side of stud below.**]

M. Rafter Tie-Downs (Hurricane or Seismic Ties): Bent strap tie for fastening rafters or roof trusses to wall studs below, 2-1/4 inches wide by 0.062 inch thick. Tie fits over top of rafter or truss and fastens to both sides of rafter or truss, face of top plates, and side of stud below.

N. Floor-to-Floor Ties: Flat straps, with holes for fasteners, for tying upper floor wall studs to band joists and lower floor studs, 1-1/4 inches wide by 0.050 inch thick by 36 inches long.

O. Hold-Downs: Brackets for bolting to wall studs and securing to foundation walls with anchor bolts or to other hold-downs with threaded rods and designed with first of two bolts placed seven bolt diameters from reinforced base.

1. Bolt Diameter: [**5/8 inch**] [**3/4 inch**].
2. Width: [**2-1/2 inches**] [**3-3/16 inches**].
3. Body Thickness: [**0.108 inch**] [**0.138 inch**].
4. Base Reinforcement Thickness: [**0.108 inch**] [**0.239 inch**].

P. Wall Bracing:

1. T-shaped bracing made for letting into studs in saw kerf, 1-1/8 inches wide by 9/16 inch deep by 0.034 inch thick with hemmed edges.

Copyright © 2025 by the American Institute of Architects. Warning: This AIA MasterSpec-based document is protected by U.S. Copyright Law and International Treaties. It was created by "Michael Shilale Architects, LLP" for "Renovation of Rockland Green Administrative Headquarters and Construction of an Immersive Theatre Experience". A valid, current MasterSpec license is required for editing and use of this document for any other project.(22360)

2. Angle bracing made for letting into studs in saw kerf, 15/16 by 15/16 by 0.040 inch thick with hemmed edges.

2.12 MISCELLANEOUS MATERIALS

A. Sill-Sealer Gaskets:

1. Glass-fiber-resilient insulation, fabricated in strip form, for use as a sill sealer; 1-inch nominal thickness, compressible to 1/32 inch; selected from manufacturer's standard widths to suit width of sill members indicated.
2. Closed-cell neoprene foam, 1/4 inch thick, selected from manufacturer's standard widths to suit width of sill members indicated.
3. Self-adhering sheet consisting of 64mils of rubberized asphalt laminated on one side to a 4-mil- thick, polyethylene-film reinforcement, and with release liner on adhesive side [**; formulated for application with primer or surface conditioner that complies with VOC limits of authorities having jurisdiction**].

B. Flexible Flashing: Composite, self-adhesive, flashing product consisting of a pliable, [**butyl rubber**] [**or**] [**rubberized-asphalt**] compound, bonded to a high-density polyethylene film, aluminum foil, or spunbonded polyolefin to produce an overall thickness of not less than 0.025 inch.

C. Adhesives for Gluing [**Furring**] [**and**] [**Sleepers**] to Concrete or Masonry: Formulation complying with ASTM D3498 that is approved for use indicated by adhesive manufacturer.

1. <Click to insert sustainable design text for VOC content of adhesive.>
2. <Click to insert sustainable design text for low emitting adhesives.>

D. Water-Repellent Preservative: NWWDA-tested and -accepted formulation containing 3-iodo-2-propynyl butyl carbamate, combined with an insecticide containing chloropyrifos as its active ingredient.

PART 3 - EXECUTION

3.1 INSTALLATION, GENERAL

A. Framing Standard: Comply with AF&PA's WCD 1, "Details for Conventional Wood Frame Construction," unless otherwise indicated.

B. Framing with Engineered Wood Products: Install engineered wood products to comply with manufacturer's written instructions.

C. Set work to required levels and lines, with members plumb, true to line, cut, and fitted. Fit rough carpentry accurately to other construction. Locate [**furring,**]nailers, blocking, [**grounds,**]and similar supports to comply with requirements for attaching other construction.

Copyright © 2025 by the American Institute of Architects. Warning: This AIA MasterSpec-based document is protected by U.S. Copyright Law and International Treaties. It was created by "Michael Shilale Architects, LLP" for "Renovation of Rockland Green Administrative Headquarters and Construction of an Immersive Theatre Experience". A valid, current MasterSpec license is required for editing and use of this document for any other project.(22360)

D. Install plywood backing panels by fastening to studs; coordinate locations with utilities requiring backing panels. [**Install fire-retardant-treated plywood backing panels with classification marking of testing agency exposed to view.**]

E. Install shear wall panels to comply with manufacturer's written instructions.

F. Install metal framing anchors to comply with manufacturer's written instructions. Install fasteners through each fastener hole.

G. Install sill sealer gasket to form continuous seal between sill plates and foundation walls.

H. Install sill sealer gasket/termite barrier in accordance with manufacturer's written instructions at the underside of wall bottom track or rim track and at the top of foundation wall or slab at stud or joist locations.

I. Do not splice structural members between supports unless otherwise indicated.

J. Provide blocking and framing as indicated and as required to support facing materials, fixtures, specialty items, and trim.

1. Provide metal clips for fastening gypsum board or lath at corners and intersections where framing or blocking does not provide a surface for fastening edges of panels. Space clips not more than 16 inches o.c.

K. Provide fire blocking in furred spaces, stud spaces, and other concealed cavities as indicated and as follows:

1. Fire block furred spaces of walls, at each floor level, at ceiling, and at not more than 96 inches o.c. with solid wood blocking or noncombustible materials accurately fitted to close furred spaces.
2. Fire block concealed spaces of wood-framed walls and partitions at each floor level, at ceiling line of top story, and at not more than 96 inches o.c. Where fire blocking is not inherent in framing system used, provide closely fitted solid wood blocks of same width as framing members and 2-inch nominal thickness.
3. Fire block concealed spaces between floor sleepers with same material as sleepers to limit concealed spaces to not more than 100 sq. ft. and to solidly fill space below partitions.
4. Fire block concealed spaces behind combustible cornices and exterior trim at not more than 20 feet o.c.

L. Sort and select lumber so that natural characteristics do not interfere with installation or with fastening other materials to lumber. Do not use materials with defects that interfere with function of member or pieces that are too small to use with minimum number of joints or optimum joint arrangement.

M. Comply with AWPA M4 for applying field treatment to cut surfaces of preservative-treated lumber.

1. Use inorganic boron for items that are continuously protected from liquid water.
2. Use copper naphthenate for items not continuously protected from liquid water.

Copyright © 2025 by the American Institute of Architects. Warning: This AIA MasterSpec-based document is protected by U.S. Copyright Law and International Treaties. It was created by "Michael Shilale Architects, LLP" for "Renovation of Rockland Green Administrative Headquarters and Construction of an Immersive Theatre Experience". A valid, current MasterSpec license is required for editing and use of this document for any other project.(22360)

N. Where wood-preservative-treated lumber is installed adjacent to metal decking, install continuous flexible flashing separator between wood and metal decking.

O. Securely attach rough carpentry work to substrate by anchoring and fastening as indicated, complying with the following:

1. Table 2304.9.1, "Fastening Schedule," in ICC's International Building Code (IBC).
2. Table R602.3(1), "Fastener Schedule for Structural Members," and Table R602.3(2), "Alternate Attachments," in ICC's International Residential Code for One- and Two-Family Dwellings.
3. ICC-ES evaluation report for fastener.

P. Use steel common nails unless otherwise indicated. Select fasteners of size that will not fully penetrate members where opposite side will be exposed to view or will receive finish materials. Make tight connections between members. Install fasteners without splitting wood. Drive nails snug but do not countersink nail heads unless otherwise indicated.

Q. For exposed work, arrange fasteners in straight rows parallel with edges of members, with fasteners evenly spaced, and with adjacent rows staggered.

1. Comply with [**approved**] [**indicated**] fastener patterns where applicable. [**Before fastening, mark fastener locations, using a template made of sheet metal, plastic, or cardboard.**]
2. Use finishing nails unless otherwise indicated. Countersink nail heads and fill holes with wood filler.
3. Use common nails unless otherwise indicated. Drive nails snug but do not countersink nail heads.

3.2 INSTALLATION OF WOOD BLOCKING AND NAILERS

A. Install where indicated and where required for [**screeding or**] attaching other work. Form to shapes indicated and cut as required for true line and level of attached work. Coordinate locations with other work involved.

B. Attach items to substrates to support applied loading. Recess bolts and nuts flush with surfaces unless otherwise indicated.

C. Provide permanent grounds of dressed, pressure-preservative-treated, key-beveled lumber not less than 1-1/2 inches wide and of thickness required to bring face of ground to exact thickness of finish material. Remove temporary grounds when no longer required.

3.3 INSTALLATION OF WOOD FURRING

A. Install level and plumb with closure strips at edges and openings. Shim with wood as required for tolerance of finish work.

B. Furring to Receive Plywood or Hardboard Paneling: Install 1-by-3-inch nominal- size furring [**horizontally**] [**and**] [**vertically**] at [**24 inches**] [**600 mm**] o.c.

Copyright © 2025 by the American Institute of Architects. Warning: This AIA MasterSpec-based document is protected by U.S. Copyright Law and International Treaties. It was created by "Michael Shilale Architects, LLP" for "Renovation of Rockland Green Administrative Headquarters and Construction of an Immersive Theatre Experience". A valid, current MasterSpec license is required for editing and use of this document for any other project.(22360)

C. Furring to Receive [**Gypsum Board**] [**Plaster Lath**]: Install 1-by-2-inch nominal- size furring vertically at [**16 inches**] [**400 mm**] o.c.

3.4 INSTALLATION OF WALL AND PARTITION FRAMING

A. General: Provide single bottom plate and double top plates using members of 2-inch nominal thickness whose widths equal that of studs, except single top plate may be used for non-load-bearing partitions [**and for load-bearing partitions where framing members bearing on partition are located directly over studs**]. Fasten plates to supporting construction unless otherwise indicated.

1. For exterior walls, provide [**2-by-6-inch nominal-**] [**2-by-4-inch nominal-**] size wood studs spaced [**24 inches**] [**16 inches**] [**600 mm**] [**400 mm**] o.c. unless otherwise indicated.
2. For interior partitions and walls, provide [**2-by-6-inch nominal-**] [**2-by-4-inch nominal-**] [**2-by-3-inch nominal-**] size wood studs spaced [**24 inches**] [**16 inches**] [**600 mm**] [**400 mm**] o.c. unless otherwise indicated.
3. Provide continuous horizontal blocking at midheight of partitions more than 96 inches high, using members of 2-inch nominal thickness and of same width as wall or partitions.

B. Construct corners and intersections with three or more studs [**, except that two studs may be used for interior non-load-bearing partitions**].

C. Frame openings with multiple studs and headers. Provide nailed header members of thickness equal to width of studs. Support headers on jamb studs.

1. For non-load-bearing partitions, provide double-jamb studs and headers not less than 4-inch nominal depth for openings 48 inches and less in width, 6-inch nominal depth for openings 48 to 72 inches in width, 8-inch nominal depth for openings 72 to 120 inches in width, and not less than 10-inch nominal depth for openings 10 to 12 feet in width.
2. For load-bearing walls, provide double-jamb studs for openings 60 inches and less in width, and triple-jamb studs for wider openings. Provide headers of depth indicated [**or, if not indicated, according to Table R502.5(1) or Table R502.5(2), as applicable, in ICC's International Residential Code for One- and Two-Family Dwellings**].

D. Provide diagonal bracing in [**exterior walls, at both walls of each external corner**] [**walls, at locations indicated**], at 45-degree angle, full-story height unless otherwise indicated. Use [**1-by-4-inch nominal- size boards, let-in flush with faces of studs**] [**metal wall bracing, let into studs in saw kerf**].

3.5 INSTALLATION OF FLOOR JOIST FRAMING

A. General: Install floor joists with crown edge up and support ends of each member with not less than 1-1/2 inches of bearing on wood or metal, or 3 inches on masonry. Attach floor joists as follows:

1. Where supported on wood members, by [**toe nailing or by**] using metal framing anchors.

Copyright © 2025 by the American Institute of Architects. Warning: This AIA MasterSpec-based document is protected by U.S. Copyright Law and International Treaties. It was created by "Michael Shilale Architects, LLP" for "Renovation of Rockland Green Administrative Headquarters and Construction of an Immersive Theatre Experience". A valid, current MasterSpec license is required for editing and use of this document for any other project.(22360)

2. Where framed into wood supporting members, by using wood ledgers as indicated or, if not indicated, by using metal joist hangers.

B. Fire Cuts: At joists built into masonry, bevel cut ends 3 inches and do not embed more than 4 inches.

C. Frame openings with headers and trimmers supported by metal joist hangers; double headers and trimmers where span of header exceeds 48 inches.

D. Do not notch in middle third of joists; limit notches to one-sixth depth of joist, one-third at ends. Do not bore holes larger than one-third depth of joist; do not locate closer than 2 inches from top or bottom.

E. Provide solid blocking of 2-inch nominal thickness by depth of joist at ends of joists unless nailed to header or band.

F. Lap members framing from opposite sides of beams, girders, or partitions not less than 4 inches or securely tie opposing members together. Provide solid blocking of 2-inch nominal thickness by depth of joist over supports.

G. Anchor members paralleling masonry with 1/4-by-1-1/4-inch metal strap anchors spaced not more than 96 inches o.c., extending over and fastening to three joists. Embed anchors at least 4 inches into grouted masonry with ends bent at right angles and extending 4 inches beyond bend.

H. Provide solid blocking between joists under jamb studs for openings.

I. Under non-load-bearing partitions, provide double joists separated by solid blocking equal to depth of studs above.

1. Provide triple joists separated as above, under partitions receiving ceramic tile and similar heavy finishes or fixtures.

J. Provide bridging of type indicated below, at intervals of 96 inches o.c., between joists.

1. Diagonal wood bridging formed from bevel-cut, 1-by-3-inch nominal- size lumber, double-crossed and nailed at both ends to joists.
2. Steel bridging installed to comply with bridging manufacturer's written instructions.

3.6 INSTALLATION OF CEILING JOIST AND RAFTER FRAMING

A. Ceiling Joists: Install with crown edge up and complying with requirements specified above for floor joists. Face nail to ends of parallel rafters.

1. Where ceiling joists are at right angles to rafters, provide additional short joists parallel to rafters from wall plate to first joist; nail to ends of rafters and to top plate, and nail to first joist or anchor with framing anchors or metal straps. Provide 1-by-8-inch nominal- size or 2-by-4-inch nominal- size stringers spaced 48 inches o.c. crosswise over main ceiling joists.

Copyright © 2025 by the American Institute of Architects. Warning: This AIA MasterSpec-based document is protected by U.S. Copyright Law and International Treaties. It was created by "Michael Shilale Architects, LLP" for "Renovation of Rockland Green Administrative Headquarters and Construction of an Immersive Theatre Experience". A valid, current MasterSpec license is required for editing and use of this document for any other project.(22360)

B. Rafters: Notch to fit exterior wall plates and [**toe nail or**] use metal framing anchors. Double rafters to form headers and trimmers at openings in roof framing, if any, and support with metal hangers. Where rafters abut at ridge, place directly opposite each other and nail to ridge member or use metal ridge hangers.

1. At valleys, provide double-valley rafters of size indicated or, if not indicated, of same thickness as regular rafters and 2 inches deeper. Bevel ends of jack rafters for full bearing against valley rafters.
2. At hips, provide hip rafter of size indicated or, if not indicated, of same thickness as regular rafters and 2 inches deeper. Bevel ends of jack rafters for full bearing against hip rafter.

C. Provide collar beams (ties) as indicated or, if not indicated, provide 1-by-6-inch nominal- size boards between every third pair of rafters, but not more than 48 inches o.c. Locate below ridge member, at third point of rafter span. Cut ends to fit roof slope and nail to rafters.

D. Provide special framing as indicated for eaves, overhangs, dormers, and similar conditions if any.

3.7 INSTALLATION OF TIMBER FRAMING

A. Install timber beams with crown edge up and provide not less than 4 inches of bearing on supports. Provide continuous members unless otherwise indicated; tie together over supports as indicated if not continuous.

B. Where beams or girders are framed into pockets of exterior concrete or masonry walls, provide 1/2-inch airspace at sides and ends of wood members.

C. Install wood posts using metal anchors indicated.

D. Treat ends of timber beams and posts exposed to weather by dipping in water-repellent preservative for 15 minutes.

3.8 PROTECTION

A. Protect wood that has been treated with inorganic boron (SBX) from weather. If, despite protection, inorganic boron-treated wood becomes wet, apply EPA-registered borate treatment. Apply borate solution by spraying to comply with EPA-registered label.

B. Protect rough carpentry from weather. If, despite protection, rough carpentry becomes [**wet**] [**wet enough that moisture content exceeds that specified**], apply EPA-registered borate treatment. Apply borate solution by spraying to comply with EPA-registered label.

END OF SECTION 061000

Copyright © 2025 by the American Institute of Architects. Warning: This AIA MasterSpec-based document is protected by U.S. Copyright Law and International Treaties. It was created by "Michael Shilale Architects, LLP" for "Renovation of Rockland Green Administrative Headquarters and Construction of an Immersive Theatre Experience". A valid, current MasterSpec license is required for editing and use of this document for any other project.(22360)

SECTION 061053 - MISCELLANEOUS ROUGH CARPENTRY

PART 1 - GENERAL

1.1 RELATED DOCUMENTS

A. Drawings and general provisions of the Contract, including General and Supplementary Conditions and Division 01 Specification Sections, apply to this Section.

1.2 SUMMARY

A. Section Includes:

1. Wood blocking , cants, and nailers.

1.3 DEFINITIONS

A. Boards or Strips: Lumber of less than 2 inches nominal size in least dimension.

B. Dimension Lumber: Lumber of 2 inches nominal or greater size but less than 5 inches nominal size in least dimension.

1.4 ACTION SUBMITTALS

A. Product Data: For each type of process and factory-fabricated product. Indicate component materials and dimensions and include construction and application details.

1. Include data for wood-preservative treatment from chemical treatment manufacturer and certification by treating plant that treated materials comply with requirements. Indicate type of preservative used and net amount of preservative retained.
2. Include data for fire-retardant treatment from chemical treatment manufacturer and certification by treating plant that treated materials comply with requirements. Include physical properties of treated materials based on testing by a qualified independent testing agency.
3. For fire-retardant treatments, include physical properties of treated lumber both before and after exposure to elevated temperatures, based on testing by a qualified independent testing agency according to ASTM D 5664.
4. For products receiving a waterborne treatment, include statement that moisture content of treated materials was reduced to levels specified before shipment to Project site.

1.5 INFORMATIONAL SUBMITTALS

A. Evaluation Reports: For the following, from ICC-ES:

Copyright © 2025 by the American Institute of Architects. Warning: This AIA MasterSpec-based document is protected by U.S. Copyright Law and International Treaties. It was created by "Michael Shilale Architects, LLP" for "Renovation of Rockland Green Administrative Headquarters and Construction of an Immersive Theatre Experience". A valid, current MasterSpec license is required for editing and use of this document for any other project.(22360)

1. Preservative-treated wood.
2. Fire-retardant-treated wood.
3. Post-installed anchors.

1.6 QUALITY ASSURANCE

A. Testing Agency Qualifications: For testing agency providing classification marking for fire-retardant-treated material, an inspection agency acceptable to authorities having jurisdiction that periodically performs inspections to verify that the material bearing the classification marking is representative of the material tested.

1.7 DELIVERY, STORAGE, AND HANDLING

A. Stack lumber flat with spacers beneath and between each bundle to provide air circulation. Protect lumber from weather by covering with waterproof sheeting, securely anchored. Provide for air circulation around stacks and under coverings.

PART 2 - PRODUCTS

2.1 WOOD PRODUCTS, GENERAL

A. Lumber: DOC PS 20 and applicable rules of grading agencies indicated. If no grading agency is indicated, provide lumber that complies with the applicable rules of any rules-writing agency certified by the ALSC Board of Review. Provide lumber graded by an agency certified by the ALSC Board of Review to inspect and grade lumber under the rules indicated.

1. Factory mark each piece of lumber with grade stamp of grading agency.
2. For exposed lumber indicated to receive a stained or natural finish, mark grade stamp on end or back of each piece or omit grade stamp and provide certificates of grade compliance issued by grading agency.
3. Dress lumber, S4S, unless otherwise indicated.

B. Maximum Moisture Content of Lumber: 19 percent unless otherwise indicated.

2.2 WOOD-PRESERVATIVE-TREATED MATERIALS

A. Preservative Treatment by Pressure Process: AWPA U1; Use Category UC2.

1. Preservative Chemicals: Acceptable to authorities having jurisdiction and containing no arsenic or chromium.
2. For exposed items indicated to receive a stained or natural finish, chemical formulations shall not require incising, contain colorants, bleed through, or otherwise adversely affect finishes.

Copyright © 2025 by the American Institute of Architects. Warning: This AIA MasterSpec-based document is protected by U.S. Copyright Law and International Treaties. It was created by "Michael Shilale Architects, LLP" for "Renovation of Rockland Green Administrative Headquarters and Construction of an Immersive Theatre Experience". A valid, current MasterSpec license is required for editing and use of this document for any other project.(22360)

B. Kiln-dry lumber after treatment to a maximum moisture content of 19 percent. Do not use material that is warped or does not comply with requirements for untreated material.

C. Mark lumber with treatment quality mark of an inspection agency approved by the ALSC Board of Review.

D. Application: Treat all miscellaneous carpentry unless otherwise indicated.

2.3 FIRE-RETARDANT-TREATED MATERIALS

A. General: Where fire-retardant-treated materials are indicated, materials shall comply with requirements in this article, that are acceptable to authorities having jurisdiction, and with fire-test-response characteristics specified as determined by testing identical products per test method indicated by a qualified testing agency.

B. Fire-Retardant-Treated Lumber and Plywood by Pressure Process: Products with a flame-spread index of 25 or less when tested according to ASTM E 84, and with no evidence of significant progressive combustion when the test is extended an additional 20 minutes, and with the flame front not extending more than 10.5 feet beyond the centerline of the burners at any time during the test.

1. Treatment shall not promote corrosion of metal fasteners.
2. Exterior Type: Treated materials shall comply with requirements specified above for fire-retardant-treated lumber and plywood by pressure process after being subjected to accelerated weathering according to ASTM D 2898. Use for exterior locations and where indicated.
3. Design Value Adjustment Factors: Treated lumber shall be tested according to ASTM D 5664, and design value adjustment factors shall be calculated according to ASTM D 6841.

C. Identify fire-retardant-treated wood with appropriate classification marking of qualified testing agency.

D. Application: Treat all miscellaneous carpentry unless otherwise indicated.

1. Wood cants, nailers, curbs, equipment support bases, blocking, and similar members in connection with roofing.

2.4 FASTENERS

A. General: Provide fasteners of size and type indicated that comply with requirements specified in this article for material and manufacture.

1. Where carpentry is exposed to weather, in ground contact, pressure-preservative treated, or in area of high relative humidity, provide fasteners of Type 304 stainless steel.

B. Nails, Brads, and Staples: ASTM F 1667.

Copyright © 2025 by the American Institute of Architects. Warning: This AIA MasterSpec-based document is protected by U.S. Copyright Law and International Treaties. It was created by "Michael Shilale Architects, LLP" for "Renovation of Rockland Green Administrative Headquarters and Construction of an Immersive Theatre Experience". A valid, current MasterSpec license is required for editing and use of this document for any other project.(22360)

C. Post-Installed Anchors: Fastener systems with an evaluation report acceptable to authorities having jurisdiction, based on ICC-ES AC01 ICC-ES AC58 ICC-ES AC193 or ICC-ES AC308 as appropriate for the substrate.

1. Material: Carbon-steel components, zinc plated to comply with ASTM B 633, Class Fe/Zn 5.
2. Material: Stainless steel with bolts and nuts complying with ASTM F 593 and ASTM F 594, Alloy Group 1 or 2.

PART 3 - EXECUTION

3.1 INSTALLATION, GENERAL

A. Framing Standard: Comply with AF&PA's WCD 1, "Details for Conventional Wood Frame Construction," unless otherwise indicated.

B. Set carpentry to required levels and lines, with members plumb, true to line, cut, and fitted. Fit carpentry accurately to other construction. Locate nailers, blocking, grounds, and similar supports to comply with requirements for attaching other construction.

C. Install plywood backing panels by fastening to studs; coordinate locations with utilities requiring backing panels. Install fire-retardant-treated plywood backing panels with classification marking of testing agency exposed to view.

D. Install metal framing anchors to comply with manufacturer's written instructions. Install fasteners through each fastener hole.

E. Do not splice structural members between supports unless otherwise indicated.

F. Provide blocking and framing as indicated and as required to support facing materials, fixtures, specialty items, and trim.

1. Provide metal clips for fastening gypsum board or lath at corners and intersections where framing or blocking does not provide a surface for fastening edges of panels. Space clips not more than 16 inches o.c.

G. Provide fire blocking in furred spaces, stud spaces, and other concealed cavities as indicated and as follows:

1. Fire block furred spaces of walls, at each floor level, at ceiling, and at not more than 96 inches o.c. with solid wood blocking or noncombustible materials accurately fitted to close furred spaces.
2. Fire block concealed spaces of wood-framed walls and partitions at each floor level, at ceiling line of top story, and at not more than 96 inches o.c. Where fire blocking is not inherent in framing system used, provide closely fitted solid wood blocks of same width as framing members and 2-inch nominal thickness.

Copyright © 2025 by the American Institute of Architects. Warning: This AIA MasterSpec-based document is protected by U.S. Copyright Law and International Treaties. It was created by "Michael Shilale Architects, LLP" for "Renovation of Rockland Green Administrative Headquarters and Construction of an Immersive Theatre Experience". A valid, current MasterSpec license is required for editing and use of this document for any other project.(22360)

3. Fire block concealed spaces between floor sleepers with same material as sleepers to limit concealed spaces to not more than 100 sq. ft. and to solidly fill space below partitions.
4. Fire block concealed spaces behind combustible cornices and exterior trim at not more than 20 feet o.c.

H. Sort and select lumber so that natural characteristics do not interfere with installation or with fastening other materials to lumber. Do not use materials with defects that interfere with function of member or pieces that are too small to use with minimum number of joints or optimum joint arrangement.

I. Comply with AWPA M4 for applying field treatment to cut surfaces of preservative-treated lumber.

1. Use inorganic boron for items that are continuously protected from liquid water.
2. Use copper naphthenate for items not continuously protected from liquid water.

J. Where wood-preservative-treated lumber is installed adjacent to metal decking, install continuous flexible flashing separator between wood and metal decking.

K. Securely attach carpentry work to substrate by anchoring and fastening as indicated, complying with the following:

1. Table 2304.9.1, "Fastening Schedule," in ICC's International Building Code.
2. Table R602.3(1), "Fastener Schedule for Structural Members," and Table R602.3(2), "Alternate Attachments," in ICC's International Residential Code for One- and Two-Family Dwellings.
3. ICC-ES evaluation report for fastener.

L. Use steel common nails unless otherwise indicated. Select fasteners of size that will not fully penetrate members where opposite side will be exposed to view or will receive finish materials. Make tight connections between members. Install fasteners without splitting wood. Drive nails snug but do not countersink nail heads unless otherwise indicated.

3.2 WOOD BLOCKING AND NAILER INSTALLATION

A. Install where indicated and where required for screeding or attaching other work. Form to shapes indicated and cut as required for true line and level of attached work. Coordinate locations with other work involved.

B. Attach items to substrates to support applied loading. Recess bolts and nuts flush with surfaces unless otherwise indicated.

C. Provide permanent grounds of dressed, pressure-preservative-treated, key-beveled lumber not less than 1-1/2 inches wide and of thickness required to bring face of ground to exact thickness of finish material. Remove temporary grounds when no longer required.

Copyright © 2025 by the American Institute of Architects. Warning: This AIA MasterSpec-based document is protected by U.S. Copyright Law and International Treaties. It was created by "Michael Shilale Architects, LLP" for "Renovation of Rockland Green Administrative Headquarters and Construction of an Immersive Theatre Experience". A valid, current MasterSpec license is required for editing and use of this document for any other project.(22360)

3.3 PROTECTION

A. Protect wood that has been treated with inorganic boron (SBX) from weather. If, despite protection, inorganic boron-treated wood becomes wet, apply EPA-registered borate treatment. Apply borate solution by spraying to comply with EPA-registered label.

B. Protect miscellaneous rough carpentry from weather. If, despite protection, miscellaneous rough carpentry becomes wet, apply EPA-registered borate treatment. Apply borate solution by spraying to comply with EPA-registered label.

END OF SECTION 061053

Copyright © 2025 by the American Institute of Architects. Warning: This AIA MasterSpec-based document is protected by U.S. Copyright Law and International Treaties. It was created by "Michael Shilale Architects, LLP" for "Renovation of Rockland Green Administrative Headquarters and Construction of an Immersive Theatre Experience". A valid, current MasterSpec license is required for editing and use of this document for any other project.(22360)

SECTION 064116 - PLASTIC-LAMINATE-CLAD ARCHITECTURAL CABINETS

PART 1 - GENERAL

1.1 SUMMARY

A. Section Includes:

1. Plastic-laminate-clad architectural cabinets.
2. Cabinet hardware and accessories.
3. Miscellaneous materials.

B. Related Requirements:

1. Section 061000 "Rough Carpentry" for wood furring, blocking, shims, and hanging strips required for installing cabinets that are concealed within other construction before cabinet installation.
2. Section 123623.13 "Plastic-Laminate-Clad Countertops."

1.2 COORDINATION

A. Coordinate sizes and locations of framing, blocking, furring, reinforcements, and other related units of Work specified in other Sections to support loads imposed by installed and fully loaded cabinets.

B. Hardware Coordination: Distribute copies of approved hardware schedule specified in [**Section 087100 "Door Hardware"**] [**Section 087111 "Door Hardware (Descriptive Specification)"**] to manufacturer of architectural cabinets; coordinate Shop Drawings and fabrication with hardware requirements.

1.3 ACTION SUBMITTALS

A. Product Data:

1. Plastic-laminate-clad architectural cabinets.
2. Cabinet hardware and accessories.
3. Miscellaneous materials.

B. Shop Drawings:

1. Include plans, elevations, sections, and attachment details.
2. Show [**large-scale**] [**full-size**] details.
3. Show locations and sizes of furring, blocking, and hanging strips, including concealed blocking and reinforcement specified in other Sections.

Copyright © 2025 by the American Institute of Architects. Warning: This AIA MasterSpec-based document is protected by U.S. Copyright Law and International Treaties. It was created by "Michael Shilale Architects, LLP" for "Renovation of Rockland Green Administrative Headquarters and Construction of an Immersive Theatre Experience". A valid, current MasterSpec license is required for editing and use of this document for any other project.(22360)

4. Show locations and sizes of cutouts and holes for items installed in plastic-laminate architectural cabinets.
5. Apply AWI Quality Certification Program label to Shop Drawings.

C. Samples: For each exposed product and for each color and texture specified, in manufacturer's or manufacturer's standard size.

D. Samples for Initial Selection: For each type of exposed finish.

E. Samples for Verification: For the following:

1. Plastic Laminates: [**8 by 10 inches**] [**12 by 12 inches**], for each type, color, pattern, and surface finish required.
   a. Provide one sample applied to core material with specified edge material applied to one edge.
2. Thermally Fused Laminate (TFL) Panels: [**8 by 10 inches**] [**12 by 12 inches**], for each color, pattern, and surface finish.
   a. Provide edge banding on one edge.
3. Corner Pieces:
   a. Cabinet-front frame joints between stiles and rails and at exposed end pieces, 18 inches high by 18 inches wide by 6 inches deep.
   b. Miter joints for standing trim.
4. Exposed Cabinet Hardware and Accessories: One full-size unit for each type and finish.

1.4 INFORMATIONAL SUBMITTALS

A. Product Certificates: For [**each type of product.**] [**the following:**]

1. Composite wood products.
2. Thermally fused laminate panels.
3. High-pressure decorative laminate.
4. Glass.
5. Adhesives.

1.5 CLOSEOUT SUBMITTALS

A. Quality Standard Compliance Certificates: AWI Quality Certification Program certificates.

1.6 QUALITY ASSURANCE

A. Manufacturer's Qualifications: Employs skilled workers who custom fabricate products similar to those required for this Project and whose products have a record of successful in-service performance.

1. Manufacturer's Certification: Licensed participant in AWI's Quality Certification Program .

Copyright © 2025 by the American Institute of Architects. Warning: This AIA MasterSpec-based document is protected by U.S. Copyright Law and International Treaties. It was created by "Michael Shilale Architects, LLP" for "Renovation of Rockland Green Administrative Headquarters and Construction of an Immersive Theatre Experience". A valid, current MasterSpec license is required for editing and use of this document for any other project.(22360)

B. Mockups: Build mockups to verify selections made under Sample submittals, to demonstrate aesthetic effects, and to set quality standards for materials and execution.

1. Build mockups of [**typical architectural cabinets as shown on Drawings**] **<Insert description>**.
2. Subject to compliance with requirements, approved mockups may become part of the completed Work if undisturbed at time of Substantial Completion.

1.7 DELIVERY, STORAGE, AND HANDLING

A. Do not deliver cabinets until painting and similar finish operations that might damage architectural cabinets have been completed in installation areas. Store cabinets in installation areas or in areas where environmental conditions comply with requirements specified in "Field Conditions" Article.

1.8 FIELD CONDITIONS

A. Environmental Limitations without Humidity Control: Do not deliver or install cabinets until building is enclosed, wet-work is complete, and HVAC system is operating and maintaining temperature and relative humidity at levels planned for building occupants during the remainder of the construction period.

B. Environmental Limitations with Humidity Control: Do not deliver or install cabinets until building is enclosed, wet-work is complete, and HVAC system is operating and maintaining temperature between 60 and 90 deg F and relative humidity between [**25 and 55**] [**43 and 70**] [**20 and 50**] **<Insert numbers>** percent during the remainder of the construction period.

C. Field Measurements: Where cabinets are indicated to fit to other construction, verify dimensions of other construction by field measurements before fabrication, and indicate measurements on Shop Drawings. Coordinate fabrication schedule with construction progress to avoid delaying the Work.

1. Locate concealed framing, blocking, and reinforcements that support cabinets by field measurements before being enclosed/concealed by construction, and indicate measurements on Shop Drawings.

D. Established Dimensions: Where cabinets are indicated to fit to other construction, establish dimensions for areas where cabinets are to fit. Provide allowance for trimming at site, and coordinate construction to ensure that actual dimensions correspond to established dimensions.

Copyright © 2025 by the American Institute of Architects. Warning: This AIA MasterSpec-based document is protected by U.S. Copyright Law and International Treaties. It was created by "Michael Shilale Architects, LLP" for "Renovation of Rockland Green Administrative Headquarters and Construction of an Immersive Theatre Experience". A valid, current MasterSpec license is required for editing and use of this document for any other project.(22360)

PART 2 - PRODUCTS

2.1 ARCHITECTURAL CABINETS

A. Manufacturers: Subject to compliance with requirements, [**provide products by the following**] [**provide products by one of the following**] [**available manufacturers offering products that may be incorporated into the Work include, but are not limited to, the following**]:

1. <**Insert, in separate subparagraphs, names of preapproved woodworking firms>**.

2.2 PLASTIC-LAMINATE-CLAD ARCHITECTURAL CABINETS

A. Quality Standard: Unless otherwise indicated, comply with the Architectural Woodwork Standards for grades of cabinets indicated for construction, finishes, installation, and other requirements.

1. Provide [**labels**] [**and**] [**certificates**] from AWI certification program indicating that woodwork [**and installation**] complies with requirements of grades specified.
   a. This Project has been registered with AWI as AWI Quality Certification Program Number <**Insert number>**.
2. The Contract Documents contain requirements that are more stringent than the referenced quality standard. Comply with requirements of Contract Documents in addition to those of the referenced quality standard.

B. Architectural Woodwork Standards Grade: Custom .

C. Type of Construction: Frameless .

D. Door and Drawer-Front Style: Flush overlay.

E. High-Pressure Decorative Laminate: ISO 4586-3, grades as indicated or if not indicated, as required by quality standard.

1. <Click here to find, evaluate, and insert list of manufacturers and products.>

F. Exposed Surfaces:

1. Plastic-Laminate Grade: HGS .
2. Edges: Grade HGS .
3. Pattern Direction: Vertically for drawer fronts, doors, and fixed panels .

G. Concealed Backs of Panels with Exposed Plastic-Laminate Surfaces: High-pressure decorative laminate, ISO 4583-3, grade to match exposed surface.

H. Drawer Construction: Fabricate with exposed fronts fastened to subfront with mounting screws from interior of body.

Copyright © 2025 by the American Institute of Architects. Warning: This AIA MasterSpec-based document is protected by U.S. Copyright Law and International Treaties. It was created by "Michael Shilale Architects, LLP" for "Renovation of Rockland Green Administrative Headquarters and Construction of an Immersive Theatre Experience". A valid, current MasterSpec license is required for editing and use of this document for any other project.(22360)

1. Join subfronts, backs, and sides with [**glued rabbeted joints supplemented by mechanical fasteners**] [**or**] [**glued dovetail joints**].

I. Colors, Patterns, and Finishes: Provide materials and products that result in colors and textures of exposed laminate surfaces complying with the following requirements:

1. As indicated by laminate manufacturer's designations.
2. Match Architect's sample.
3. As selected by Architect from laminate manufacturer's full range in the following categories:
   a. Solid colors, [**gloss**] [**matte**] finish.
   b. Solid colors with core same color as surface, [**gloss**] [**matte**] finish.
   c. Wood grains, [**gloss**] [**matte**] finish.
   d. Patterns, [**gloss**] [**matte**] finish.

2.3 WOOD MATERIALS

A. Wood Products: Provide materials that comply with requirements of referenced quality standard for each type of architectural cabinet and quality grade specified unless otherwise indicated.

1. Wood Moisture Content: [**5 to 10**] [**8 to 13**] [**4 to 9**] percent.

B. Composite Wood Products: Provide materials that comply with requirements of referenced quality standard for each type of architectural cabinet and quality grade specified unless otherwise indicated.

1. Softwood Plywood: DOC PS 1 [**, medium-density overlay**].

2.4 CABINET HARDWARE AND ACCESSORIES

A. Cabinet Hardware: Provide cabinet hardware and accessory materials associated with architectural cabinets except for items specified in [**Section 087100 "Door Hardware."**] [**Section 087111 "Door Hardware (Descriptive Specification)."**]

1. <Click here to find, evaluate, and insert list of manufacturers and products.>

B. Butt Hinges: 2-3/4-inch, five-knuckle steel hinges made from 0.095-inch- thick metal, and as follows:

1. Semiconcealed Hinges for Flush Doors: ANSI/BHMA A156.9, B01361.
2. Semiconcealed Hinges for Overlay Doors: ANSI/BHMA A156.9, B01521.

C. Frameless Concealed Hinges (European Type): ANSI/BHMA A156.9, B01602, [**100**] [**135**] [**170**] degrees of opening [**, self-closing**].

D. Back-Mounted Pulls: ANSI/BHMA A156.9, B02011.

Copyright © 2025 by the American Institute of Architects. Warning: This AIA MasterSpec-based document is protected by U.S. Copyright Law and International Treaties. It was created by "Michael Shilale Architects, LLP" for "Renovation of Rockland Green Administrative Headquarters and Construction of an Immersive Theatre Experience". A valid, current MasterSpec license is required for editing and use of this document for any other project.(22360)

E. Wire Pulls: Back mounted, solid [**metal**] [**plastic**] , [**4 inches long, 5/16 inch in diameter**] [**5 inches long, 2-1/2 inches deep, and 5/16 inch in diameter**].

F. Catches: [**Magnetic catches, ANSI/BHMA A156.9, B03141**] [**Push-in magnetic catches, ANSI/BHMA A156.9, B03131**] [**Roller catches, ANSI/BHMA A156.9, B03071**] [**Ball friction catches, ANSI/BHMA A156.9, B03013**].

G. Adjustable Shelf Standards and Supports: [**ANSI/BHMA A156.9, B04071; with shelf rests, B04081**] [**ANSI/BHMA A156.9, B04102; with shelf brackets, B04112**].

H. Shelf Rests: ANSI/BHMA A156.9, B04013; [**metal**] [**plastic**] [**two-pin plastic with shelf hold-down clip**].

I. Drawer Slides: ANSI/BHMA A156.9.

1. Standard Duty (Grade 1 and Grade 2): [**Side mount**] [**Undermount**] [**and extending under bottom edge of drawer**].
2. Heavy-Duty (Grade 1HD-100 and Grade 1HD-200): [**Side mount**] [**Undermount**].
   a. Type: [**Full**] [**Full overtravel**] [**Partial**] extension.
   b. Material: [**Aluminum**] [**Epoxy-coated polymer**] [**Galvanized steel ball bearing**] [**Stainless steel**] [**Zinc-plated ball bearing**] slides.
   c. Motion Feature: [**Push to open**] [**and**] [**Soft close dampener**] [**Self-closing mechanism**].
3. Pencil drawers not more than 3 inches high and not more than 24 inches wide, provide [**50 lb**] <**Insert weight>** load capacity.
4. General-purpose drawers more than 3 inches high, but not more than 6 inches high and not more than 24 inches wide, provide [**75 lb**] <**Insert weight>** load capacity.
5. File drawers more than 6 inches high or more than 24 inches wide, provide [**100 lb**] <**Insert weight>** load capacity.
6. Lateral file drawers more than 6 inches high and more than 24 inches but not more than 30 inches wide, provide [**150 lb**] <**Insert weight>** load capacity.
7. Lateral file drawers more than 6 inches high and more than 30 inches wide, provide [**200 lb**] <**Insert weight>** load capacity.
8. Computer keyboard tray, provide [**75 lb**] <**Insert weight>** load capacity.

J. Slides for Sliding Glass Doors: ANSI/BHMA A156.9, B07063; [**plastic**] [**aluminum**].

K. Door Locks: ANSI/BHMA A156.11, E07121.

L. Drawer Locks: ANSI/BHMA A156.11, E07041.

M. Door and Drawer Silencers: ANSI/BHMA A156.16, L03011.

N. Float Glass for Cabinet Doors: ASTM C1036, Type I, [**Class 1 (clear)**] [**Class 2 or 3 (tinted)**], Quality-Q3.

1. Thickness: [**3.0 mm**] [**4.0 mm**] [**5.0 mm**] [**6.0 mm**].
2. Tint Color: [**Blue-green**] [**Bronze**] [**Green**] [**Gray**] <**Insert color>**.

Copyright © 2025 by the American Institute of Architects. Warning: This AIA MasterSpec-based document is protected by U.S. Copyright Law and International Treaties. It was created by "Michael Shilale Architects, LLP" for "Renovation of Rockland Green Administrative Headquarters and Construction of an Immersive Theatre Experience". A valid, current MasterSpec license is required for editing and use of this document for any other project.(22360)

O. Tempered Float Glass for Cabinet Doors: ASTM C1048, Kind FT, Condition A, Type I, [**Class 1 (clear)**] [**Class 2 or 3 (tinted)**], Quality-Q3, 6 mm thick unless otherwise indicated.

1. Tint Color: [**Blue-green**] [**Bronze**] [**Green**] [**Gray**] <**Insert color>**.
2. Unframed Glass Doors: Seam exposed edges seamed before tempering.

P. Mirror Glass for Cabinet Doors: ASTM C1503, Mirror [**Select**] [**Glazing**], Quality-Q3.

1. Thickness: [**3.0 mm**] [**4.0 mm**] [**5.0 mm**] [**6.0 mm**].

Q. Decorative Glass for Cabinet Doors: Provide decorative glass complying with Section 088113 "Decorative Glass Glazing."

R. Tempered Float Glass for Cabinet Shelves: ASTM C1048, Kind FT, Condition A, Type I, [**Class 1 (clear)**] [**Class 2 or 3 (tinted)**], Quality-Q3; with exposed edges seamed before tempering, 6 mm thick.

1. Tint Color: [**Blue-green**] [**Bronze**] [**Green**] [**Gray**] <**Insert color>**.

S. Grommets for Cable Passage: [**1-1/4-inch**] [**2-inch**] <**Insert dimension>** OD, molded-plastic grommets and matching plastic caps with slot for wire passage.

1. Color: [**Brown**] [**Black**] <**Insert color>**.

T. Exposed Hardware Finishes: For exposed hardware, provide finish that complies with ANSI/BHMA A156.18 for ANSI/BHMA finish number indicated.

1. Dark, Oxidized, Satin Bronze, Oil Rubbed: ANSI/BHMA 613 for bronze base; ANSI/BHMA 640 for steel base; match Architect's sample.
2. Bright Brass, Clear Coated: ANSI/BHMA 605 for brass base; ANSI/BHMA 632 for steel base.
3. Bright Brass, Vacuum Coated: ANSI/BHMA 723 for brass base; ANSI/BHMA 729 for zinc-coated-steel base.
4. Satin Brass, Blackened, Bright Relieved, Clear Coated: ANSI/BHMA 610 for brass base; ANSI/BHMA 636 for steel base.
5. Satin Chromium Plated: ANSI/BHMA 626 for brass or bronze base; ANSI/BHMA 652 for steel base.
6. Bright Chromium Plated: ANSI/BHMA 625 for brass or bronze base; ANSI/BHMA 651 for steel base.
7. Satin Stainless Steel: ANSI/BHMA 630.

U. For concealed hardware, provide manufacturer's standard finish that complies with product class requirements in ANSI/BHMA A156.9.

2.5 MISCELLANEOUS MATERIALS

A. Furring, Blocking, Shims, and Hanging Strips: [**Softwood or hardwood lumber**] [**Fire-retardant-treated softwood lumber**], kiln-dried to less than 15 percent moisture content.

Copyright © 2025 by the American Institute of Architects. Warning: This AIA MasterSpec-based document is protected by U.S. Copyright Law and International Treaties. It was created by "Michael Shilale Architects, LLP" for "Renovation of Rockland Green Administrative Headquarters and Construction of an Immersive Theatre Experience". A valid, current MasterSpec license is required for editing and use of this document for any other project.(22360)

B. Anchors: Select material, type, size, and finish required for each substrate for secure anchorage. Provide metal expansion sleeves or expansion bolts for post-installed anchors. Use nonferrous-metal or hot-dip galvanized anchors and inserts at inside face of exterior walls and at floors.

C. Adhesive for Bonding Plastic Laminate: [**Type I, waterproof type**] [**Type II water-resistant type**] as selected by fabricator to comply with requirements.

1. Adhesive for Bonding Edges: Hot-melt adhesive [**or adhesive specified above for faces**].

2.6 FABRICATION

A. Fabricate architectural cabinets to dimensions, profiles, and details indicated.

B. Complete fabrication, including assembly and hardware application, to maximum extent possible before shipment to Project site. Disassemble components only as necessary for shipment and installation. Where necessary for fitting at site, provide ample allowance for scribing, trimming, and fitting.

1. Notify Architect seven days in advance of the dates and times architectural cabinet fabrication will be complete.
2. Trial fit assemblies at manufacturer's shop that cannot be shipped completely assembled. Install dowels, screws, bolted connectors, and other fastening devices that can be removed after trial fitting. Verify that various parts fit as intended and check measurements of assemblies against field measurements before disassembling for shipment.

C. Shop-cut openings to maximum extent possible to receive hardware, appliances, electrical work, and similar items. Locate openings accurately and use templates or roughing-in diagrams to produce accurately sized and shaped openings. Sand edges of cutouts to remove splinters and burrs.

D. Install glass to comply with applicable requirements in Section 088000 "Glazing" and in GANA's "Glazing Manual."

1. For glass in frames, secure glass with removable stops.
2. For exposed glass edges, polish and grind smooth.

PART 3 - EXECUTION

3.1 PREPARATION

A. Before installation, condition cabinets to humidity conditions in installation areas for not less than 72 hours.

Copyright © 2025 by the American Institute of Architects. Warning: This AIA MasterSpec-based document is protected by U.S. Copyright Law and International Treaties. It was created by "Michael Shilale Architects, LLP" for "Renovation of Rockland Green Administrative Headquarters and Construction of an Immersive Theatre Experience". A valid, current MasterSpec license is required for editing and use of this document for any other project.(22360)

3.2 INSTALLATION

A. Architectural Woodwork Standards Grade: Install cabinets to comply with quality standard grade of item to be installed.

B. Assemble cabinets and complete fabrication at Project site to extent that it was not completed in the shop.

C. Anchor cabinets to anchors or blocking built in or directly attached to substrates. Secure with wafer-head cabinet installation screws.

D. Install cabinets level, plumb, and true in line to a tolerance of 1/8 inch in 96 inches using concealed shims.

1. Scribe and cut cabinets to fit adjoining work, refinish cut surfaces, and repair damaged finish at cuts.
2. Install cabinets without distortion so doors and drawers fit openings and are accurately aligned. Adjust hardware to center doors and drawers in openings and to provide unencumbered operation. Complete installation of hardware and accessory items as indicated.
3. Fasten wall cabinets through back, near top and bottom, and at ends not more than 16 inches o.c. with [**No. 10 wafer-head screws sized for not less than 1-1/2-inch penetration into wood framing, blocking, or hanging strips**] [**No. 10 wafer-head sheet metal screws through metal backing or metal framing behind wall finish**] [**toggle bolts through metal backing or metal framing behind wall finish**].

3.3 FIELD QUALITY CONTROL

A. Inspections: Provide inspection of installed Work through AWI's Quality Certification Program certifying that woodwork, including installation, complies with requirements of the Architectural Woodwork Standards for the specified grade.

1. Inspection entity is to prepare and submit report of inspection.

3.4 ADJUSTING AND CLEANING

A. Repair damaged and defective cabinets, where possible, to eliminate functional and visual defects. Where not possible to repair, replace architectural cabinets. Adjust joinery for uniform appearance.

B. Clean, lubricate, and adjust hardware.

C. Clean cabinets on exposed and semiexposed surfaces.

END OF SECTION 064116

Copyright © 2025 by the American Institute of Architects. Warning: This AIA MasterSpec-based document is protected by U.S. Copyright Law and International Treaties. It was created by "Michael Shilale Architects, LLP" for "Renovation of Rockland Green Administrative Headquarters and Construction of an Immersive Theatre Experience". A valid, current MasterSpec license is required for editing and use of this document for any other project.(22360)

SECTION 070150.19 - PREPARATION FOR REROOFING

PART 1 - GENERAL

1.1 RELATED DOCUMENTS

A. Drawings and general provisions of the Contract, including General and Supplementary Conditions and Division 01 Specification Sections, apply to this Section.

1.2 SUMMARY

A. Section Includes:

1. Full tear-off of entire roof system .
2. Re-cover preparation of entire roof area .
3. Removal of flashings and counterflashings.
4. Temporary roofing.

B. Related Requirements:

1. Section 011000 "Summary" for use of premises and for phasing requirements.
2. Section 015000 "Temporary Facilities and Controls" for temporary construction and environmental-protection measures for reroofing preparation.

1.3 ALLOWANCES

A. Allowance for removal of existing deteriorated metal roof deck, and replacement with new metal roof deck, is specified under Section 012100 "Allowances."

1.4 UNIT PRICES

A. Work of this Section is affected by metal deck removal and replacement unit price .

1.5 DEFINITIONS

A. EPS: Molded (expanded) polystyrene.

B. Full Roof Tear-off: Removal of existing roofing system down to existing roof deck .

C. OSB: Oriented strand board.

D. Partial Roof Tear-off: Removal of selected components and accessories from existing roofing system.

Copyright © 2025 by the American Institute of Architects. Warning: This AIA MasterSpec-based document is protected by U.S. Copyright Law and International Treaties. It was created by "Michael Shilale Architects, LLP" for "Renovation of Rockland Green Administrative Headquarters and Construction of an Immersive Theatre Experience". A valid, current MasterSpec license is required for editing and use of this document for any other project.(22360)

E. Roofing Terminology: Definitions in ASTM D 1079 and glossary of NRCA's "The NRCA Roofing Manual: Membrane Roof Systems" apply to work of this Section.

F. Roof Re-Cover Preparation: Existing roofing system is to remain and be prepared for new roof installed over it.

1.6 PREINSTALLATION MEETINGS

A. Preliminary Roofing Conference: Before starting removal Work, conduct conference at Project site .

1. Meet with Owner, Architect, Owner's insurer if applicable, testing and inspecting agency representative, roofing Installer, and installers whose work interfaces with or affects roofing, including installers of roof accessories and roof-mounted equipment.
2. Review methods and procedures related to roofing tear-off, including, but not limited to, the following:
   a. Reroofing preparation, including roofing system manufacturer's written instructions.
   b. Temporary protection requirements for existing roofing system components that are to remain.
   c. Existing roof drains and roof drainage during each stage of reroofing, and roof-drain plugging and plug removal.
   d. Construction schedule and availability of materials, Installer's personnel, equipment, and facilities needed to avoid delays.
   e. Existing roof deck conditions requiring Architect notification.
   f. Existing roof deck removal procedures and Owner notifications.
   g. Condition and acceptance of existing roof deck and base flashing substrate for reuse.
   h. Structural loading limitations of roof deck during reroofing.
   i. Base flashings, special roofing details, drainage, penetrations, equipment curbs, and condition of other construction that affect reroofing.
   j. HVAC shutdown and sealing of air intakes.
   k. Shutdown of fire-suppression, -protection, and -alarm and -detection systems.
   l. Asbestos removal and discovery of asbestos-containing materials.
   m. Governing regulations and requirements for insurance and certificates if applicable.
   n. Existing conditions that may require Architect notification before proceeding.

1.7 ACTION SUBMITTALS

A. Product Data: For each type of product.

B. Temporary Roofing Submittal: Product data and description of temporary roofing system.

1. If temporary roof remains in place, include surface preparation requirements needed to receive permanent roof, and submit a letter from roofing manufacturer stating acceptance of the temporary roof and that its inclusion does not adversely affect the new roofing system's resistance to fire and wind or its FM Approvals rating.

Copyright © 2025 by the American Institute of Architects. Warning: This AIA MasterSpec-based document is protected by U.S. Copyright Law and International Treaties. It was created by "Michael Shilale Architects, LLP" for "Renovation of Rockland Green Administrative Headquarters and Construction of an Immersive Theatre Experience". A valid, current MasterSpec license is required for editing and use of this document for any other project.(22360)

1.8 INFORMATIONAL SUBMITTALS

A. Qualification Data: For Installer.

1. Include certificate that Installer is approved by warrantor of existing roofing system.
2. Include certificate that Installer is licensed to perform asbestos abatement.

B. Field Test Reports:

1. Fastener pull-out test report.

C. Landfill Records: Indicate receipt and acceptance of demolished roofing materials and hazardous wastes, such as asbestos-containing materials, by a landfill facility licensed to accept them.

1.9 CLOSEOUT SUBMITTALS

1.10 QUALITY ASSURANCE

A. Installer Qualifications: Approved by warrantor of existing roofing system to work on existing roofing .

B. Regulatory Requirements:

1. Comply with governing EPA notification regulations before beginning roofing removal.
2. Comply with hauling and disposal regulations of authorities having jurisdiction.

1.11 FIELD CONDITIONS

A. Existing Roofing System: EPDM roofing.

B. Owner will not occupy portions of building immediately below reroofing area.

1. Conduct reroofing so Owner's operations are not disrupted.
2. Provide Owner with not less than 72 hours' written notice of activities that may affect Owner's operations.
3. Coordinate work activities daily with Owner so Owner has adequate advance notice to place protective dust and water-leakage covers over sensitive equipment and furnishings, shut down HVAC and fire-alarm or -detection equipment if needed, and evacuate occupants from below work area.
4. Before working over structurally impaired areas of deck, notify Owner to evacuate occupants from below affected area.
   a. Verify that occupants below work area have been evacuated before proceeding with work over impaired deck area.

C. Protect building to be reroofed, adjacent buildings, walkways, site improvements, exterior plantings, and landscaping from damage or soiling from reroofing operations.

Copyright © 2025 by the American Institute of Architects. Warning: This AIA MasterSpec-based document is protected by U.S. Copyright Law and International Treaties. It was created by "Michael Shilale Architects, LLP" for "Renovation of Rockland Green Administrative Headquarters and Construction of an Immersive Theatre Experience". A valid, current MasterSpec license is required for editing and use of this document for any other project.(22360)

D. Maintain access to existing walkways, corridors, and other adjacent occupied or used facilities.

E. Conditions existing at time of inspection for bidding will be maintained by Owner as far as practical.

1. A roof moisture survey of existing roofing system is available for Contractor's reference.
2. The results of an analysis of test cores from existing roofing system are available for Contractor's reference.
3. Construction Drawings and Project Manual for existing roofing system are provided for Contractor's convenience and information, but they are not a warranty of existing conditions. They are intended to supplement rather than serve in lieu of Contractor's own investigations. Contractor is responsible for conclusions derived from existing documents.

F. Weather Limitations: Proceed with reroofing preparation only when existing and forecasted weather conditions permit Work to proceed without water entering existing roofing system or building.

1. Remove only as much roofing in one day as can be made watertight in the same day.

G. Hazardous Materials: It is not expected that hazardous materials, such as asbestos-containing materials, will be encountered in the Work.

1. Existing roof will be left no less watertight than before removal.
2. If materials suspected of containing hazardous materials are encountered, do not disturb; immediately notify Architect and Owner.
   a. Hazardous materials will be removed by Owner under a separate contract.

PART 2 - PRODUCTS

2.1 TEMPORARY PROTECTION MATERIALS

A. EPS Insulation: ASTM C 578.

B. Plywood: DOC PS 1, Grade CD, Exposure 1.

C. OSB: DOC PS 2, Exposure 1.

2.2 TEMPORARY ROOFING MATERIALS

A. Design and selection of materials for temporary roofing are Contractor's responsibilities.

B. Base Sheet: ASTM D 4601/D 4601M, Type II, nonperforated, asphalt-impregnated and -coated, glass-fiber sheet.

C. Base Sheet Fasteners: Capped head, factory-coated steel fasteners, listed in FM Approvals' RoofNav.

Copyright © 2025 by the American Institute of Architects. Warning: This AIA MasterSpec-based document is protected by U.S. Copyright Law and International Treaties. It was created by "Michael Shilale Architects, LLP" for "Renovation of Rockland Green Administrative Headquarters and Construction of an Immersive Theatre Experience". A valid, current MasterSpec license is required for editing and use of this document for any other project.(22360)

2.3 INFILL AND REPLACEMENT MATERIALS

A. Use infill materials matching existing roofing system materials unless otherwise indicated.

1. Infill materials are specified in Section 075323 "Ethylene-Propylene-Diene-Monomer (EPDM) Roofing" unless otherwise indicated.

B. Steel deck is specified in Section 053100 "Steel Decking."

C. Wood blocking, curbs, and nailers are specified in Section 061053 Miscellaneous Rough Carpentry."

D. Fasteners: Factory-coated steel fasteners with metal or plastic plates listed in FM Approvals' RoofNav, and acceptable to new roofing system manufacturer.

2.4 AUXILIARY REROOFING MATERIALS

A. General: Use auxiliary reroofing preparation materials recommended by roofing system manufacturer for intended use and compatible with components of new roofing system.

PART 3 - EXECUTION

3.1 PREPARATION

A. Protection of In-Place Conditions:

1. Protect existing roofing system that is not to be reroofed.
2. Loosely lay 1-inch- minimum thick, EPS insulation over existing roofing in areas not to be reroofed.
   a. Loosely lay 15/32-inch plywood or OSB panels over EPS. Extend EPS past edges of plywood or OSB panels a minimum of 1 inch.
3. Limit traffic and material storage to areas of existing roofing that have been protected.
4. Maintain temporary protection and leave in place until replacement roofing has been completed. Remove temporary protection on completion of reroofing.
5. Comply with requirements of existing roof system manufacturer's warranty requirements.

B. Seal or isolate windows that may be exposed to airborne substances created in removal of existing materials.

C. Shut off rooftop utilities and service piping before beginning the Work.

D. Test existing roof drains to verify that they are not blocked or restricted.

1. Immediately notify Architect of any blockages or restrictions.

E. Coordinate with Owner to shut down air-intake equipment in the vicinity of the Work.

Copyright © 2025 by the American Institute of Architects. Warning: This AIA MasterSpec-based document is protected by U.S. Copyright Law and International Treaties. It was created by "Michael Shilale Architects, LLP" for "Renovation of Rockland Green Administrative Headquarters and Construction of an Immersive Theatre Experience". A valid, current MasterSpec license is required for editing and use of this document for any other project.(22360)

1. Cover air-intake louvers before proceeding with reroofing work that could affect indoor air quality or activate smoke detectors in the ductwork.

F. During removal operations, have sufficient and suitable materials on-site to facilitate rapid installation of temporary protection in the event of unexpected rain.

G. Maintain roof drains in functioning condition to ensure roof drainage at end of each workday.

1. Prevent debris from entering or blocking roof drains and conductors.
   a. Use roof-drain plugs specifically designed for this purpose.
   b. Remove roof-drain plugs at end of each workday, when no work is taking place, or when rain is forecast.
2. If roof drains are temporarily blocked or unserviceable due to roofing system removal or partial installation of new roofing system, provide alternative drainage method to remove water and eliminate ponding.
   a. Do not permit water to enter into or under existing roofing system components that are to remain.

3.2 ROOF TEAR-OFF

A. Notify Owner each day of extent of roof tear-off proposed for that day and obtain authorization to proceed.

B. Lower removed roofing materials to ground and onto lower roof levels, using dust-tight chutes or other acceptable means of removing materials from roof areas.

C. Full Roof Tear-off: Where indicated on Drawings, remove Remove existing roofing and other roofing system components down to the existing roof deck .

1. Remove substrate board vapor retarder roof insulation and cover board.
2. Remove base flashings and counter flashings.
3. Remove perimeter edge flashing and gravel stops.
4. Remove copings.
5. Remove expansion-joint covers.
6. Remove flashings at pipes, curbs, mechanical equipment, and other penetrations.
7. Remove roof drains indicated on Drawings to be removed.
8. Remove wood blocking, curbs, and nailers.
9. Bitumen and felts that are firmly bonded to concrete decks are permitted to remain if felts are dry.
   a. Remove unadhered bitumen, unadhered felts, and wet felts.
10. Remove excess asphalt from steel deck.
    a. A maximum of 15 lb/100 sq. ft. of asphalt is permitted to remain on steel decks.
11. Remove fasteners from deck or cut fasteners off slightly above deck surface.

3.3 DECK PREPARATION

A. Inspect deck after tear-off of roofing system.

Copyright © 2025 by the American Institute of Architects. Warning: This AIA MasterSpec-based document is protected by U.S. Copyright Law and International Treaties. It was created by "Michael Shilale Architects, LLP" for "Renovation of Rockland Green Administrative Headquarters and Construction of an Immersive Theatre Experience". A valid, current MasterSpec license is required for editing and use of this document for any other project.(22360)

B. If broken or loose fasteners that secure deck panels to one another or to structure are observed, or if deck appears or feels inadequately attached, immediately notify Architect.

1. Do not proceed with installation until directed by Architect.

C. If deck surface is unsuitable for receiving new roofing or if structural integrity of deck is suspect, immediately notify Architect.

1. Do not proceed with installation until directed by Architect.

D. Provide additional deck securement as indicated on Drawings.

E. Replace steel deck as indicated on Drawings.

F. Replace steel deck as directed by Architect.

1. Deck replacement will be paid for by adjusting the Contract Sum according to unit prices included in the Contract Documents.

G. Prepare and paint steel deck surface.

1. Painting and preparation for painting is specified in Section 099113 "Exterior Painting."

3.4 INFILL MATERIALS INSTALLATION

A. Immediately after roof tear-off, and inspection and repair, if needed, of deck, fill in tear-off areas to match existing roofing system construction.

1. Installation of infill materials is specified in Section 075323 "Ethylene-Propylene-Diene-Monomer (EPDM) Roofing."
2. Installation of wood blocking, curbs, and nailers is specified in Section 061053 Miscellaneous Rough Carpentry."

B. Install new roofing patch over roof infill area.

1. If new roofing is installed the same day tear-off is made, roofing patch is not required.

3.5 TEMPORARY ROOFING

A. Install approved temporary roofing over area to be reroofed.

B. Install temporary roofing over area to be reroofed.

1. , lapping each sheet 19 inches over preceding sheet.
2. Embed glass-fiber felt in a solid mopping of hot roofing asphalt applied within equiviscous temperature range.
3. Glaze-coat completed surface with hot roofing asphalt.

C. Remove temporary roofing before installing new roofing.

Copyright © 2025 by the American Institute of Architects. Warning: This AIA MasterSpec-based document is protected by U.S. Copyright Law and International Treaties. It was created by "Michael Shilale Architects, LLP" for "Renovation of Rockland Green Administrative Headquarters and Construction of an Immersive Theatre Experience". A valid, current MasterSpec license is required for editing and use of this document for any other project.(22360)

3.6 ROOF RE-COVER PREPARATION

A. Remove blisters, ridges, buckles, and other substrate irregularities from existing roofing that inhibit new recover boards from conforming to substrate.

1. Broom clean existing substrate.
2. Coordinate with Owner's inspector to schedule times for tests and inspections.
3. Remove existing membrane, insulation and material down to existing steel deck.
   a. Check existing deck for deterioration or rust areas. Replace areas using the unit prices.

3.7 BASE FLASHING REMOVAL

A. Remove existing base flashings.

1. Clean substrates of contaminants, such as asphalt, sheet materials, dirt, and debris.

B. Do not damage metal counterflashings that are to remain.

1. Replace metal counterflashings damaged during removal with counterflashings specified in Section 076200 "Sheet Metal Flashing and Trim."

C. When directed by Architect, replace parapet framing, wood blocking, curbs, and nailers to comply with Section 061053 Miscellaneous Rough Carpentry."

3.8 FASTENER PULL-OUT TESTING

A. Perform fastener pull-out tests according to SPRI FX-1, and submit test report to roofing manufacturer before installing new roofing system.

1. Obtain roofing manufacturer's approval to proceed with specified fastening pattern.
   a. Roofing manufacturer may furnish revised fastening pattern commensurate with pull-out test results.

3.9 DISPOSAL

A. Collect demolished materials and place in containers.

1. Promptly dispose of demolished materials.
2. Do not allow demolished materials to accumulate on-site.
3. Storage or sale of demolished items or materials on-site is not permitted.

B. Transport and legally dispose of demolished materials off Owner's property.

END OF SECTION 070150.19

Copyright © 2025 by the American Institute of Architects. Warning: This AIA MasterSpec-based document is protected by U.S. Copyright Law and International Treaties. It was created by "Michael Shilale Architects, LLP" for "Renovation of Rockland Green Administrative Headquarters and Construction of an Immersive Theatre Experience". A valid, current MasterSpec license is required for editing and use of this document for any other project.(22360)

SECTION 072100 - THERMAL INSULATION

PART 1 - GENERAL

1.1 SUMMARY

A. Section Includes:

1. Extruded polystyrene foam-plastic board insulation.
2. Polyisocyanurate foam-plastic board insulation.
3. Glass-fiber blanket insulation.

B. Related Requirements:

1. Section 042000 "Unit Masonry" for insulation installed in masonry cells.
2. Section 075323 "Ethylene-Propylene-Diene-Monomer (EPDM) Roofing" for insulation specified as part of roofing construction.

1.2 ACTION SUBMITTALS

A. Product Data:

1. Extruded polystyrene foam-plastic board insulation.
2. Polyisocyanurate foam-plastic board insulation.
3. Glass-fiber blanket insulation.

1.3 INFORMATIONAL SUBMITTALS

A. Installer's Certification: Listing type, manufacturer, and R-value of insulation installed in each element of the building thermal envelope.

1. For blown-in or sprayed fiberglass and cellulosic-fiber loose-fill insulation, indicate initial installed thickness, settled thickness, settled R-value, installed density, coverage area, and number of bags installed.
2. Sign, date, and post the certification in a conspicuous location on Project site.

B. Product Test Reports: For each product, for tests performed by a qualified testing agency.

1.4 DELIVERY, STORAGE, AND HANDLING

A. Protect insulation materials from physical damage and from deterioration due to moisture, soiling, and other sources. Store inside and in a dry location. Comply with manufacturer's written instructions for handling, storing, and protecting during installation.

B. Protect foam-plastic board insulation as follows:

Copyright © 2025 by the American Institute of Architects. Warning: This AIA MasterSpec-based document is protected by U.S. Copyright Law and International Treaties. It was created by "Michael Shilale Architects, LLP" for "Renovation of Rockland Green Administrative Headquarters and Construction of an Immersive Theatre Experience". A valid, current MasterSpec license is required for editing and use of this document for any other project.(22360)

1. Do not expose to sunlight except to necessary extent for period of installation and concealment.
2. Protect against ignition at all times. Do not deliver foam-plastic board materials to Project site until just before installation time.
3. Quickly complete installation and concealment of foam-plastic board insulation in each area of construction.

PART 2 - PRODUCTS

2.1 PERFORMANCE REQUIREMENTS

A. Surface-Burning Characteristics: Maximum flame-spread and smoke-developed indexes less than 25 and 450 when tested in accordance with ASTM E84.

B. Fire-Resistance Ratings: Comply with ASTM E119 or UL 263; testing by a qualified testing agency. Identify products with appropriate markings of applicable testing agency.

1. Indicate design designations from UL's "Fire Resistance Directory" or from listings of another qualified testing agency.

C. Fire Propagation Characteristics: Passes NFPA 285 testing as part of an approved assembly.

D. Labeling: Provide identification of mark indicating R-value of each piece of insulation 12 inches and wider in width.

E. Thermal-Resistance Value (R-Value): R-value as indicated on Drawings in accordance with ASTM C518.

2.2 EXTRUDED POLYSTYRENE FOAM-PLASTIC BOARD INSULATION

A. Extruded Polystyrene Board Insulation, Type X : ASTM C578, Type X, 15-psi minimum compressive strength; unfaced.

1. Manufacturers: Subject to compliance with requirements, provide products by one of the following:
   a. DuPont de Nemours, Inc.
   b. Owens Corning.
   c. The Dow Chemical Company.

2.3 POLYISOCYANURATE FOAM-PLASTIC BOARD INSULATION

A. Polyisocyanurate Board Insulation, Glass-Fiber-Mat Faced : ASTM C1289, glass-fiber-mat faced, Type II, Class 2.

1. Manufacturers: Subject to compliance with requirements, provide products by one of the following:

Copyright © 2025 by the American Institute of Architects. Warning: This AIA MasterSpec-based document is protected by U.S. Copyright Law and International Treaties. It was created by "Michael Shilale Architects, LLP" for "Renovation of Rockland Green Administrative Headquarters and Construction of an Immersive Theatre Experience". A valid, current MasterSpec license is required for editing and use of this document for any other project.(22360)

a. Atlas Polyiso Roof and Wall Insulation.
b. Hunter Panels; a Carlisle company.
c. Johns Manville; a Berkshire Hathaway company.

2.4 GLASS-FIBER BLANKET INSULATION

A. Glass-Fiber Blanket Insulation, Unfaced : ASTM C665, Type I; passing ASTM E136 for combustion characteristics.

1. Manufacturers: Subject to compliance with requirements, provide products by one of the following:
   a. Johns Manville; a Berkshire Hathaway company.
   b. Knauf Insulation.
   c. Owens Corning.

B. Glass-Fiber Blanket Insulation, Polypropylene-Scrim-Kraft Faced : ASTM C665, Type II (nonreflective faced), Class A (faced surface with a flame-spread index of 25 or less); Category 1 (membrane is a vapor barrier).

1. Manufacturers: Subject to compliance with requirements, provide products by one of the following:
   a. Johns Manville; a Berkshire Hathaway company.
   b. Knauf Insulation.
   c. Owens Corning.

C. Glass-Fiber Blanket Insulation, Kraft Faced : ASTM C665, Type II (nonreflective faced), Class C (faced surface not rated for flame propagation); Category 1 (membrane is a vapor barrier).

1. Manufacturers: Subject to compliance with requirements, provide products by one of the following:
   a. Johns Manville; a Berkshire Hathaway company.
   b. Knauf Insulation.
   c. Owens Corning.

2.5 ACCESSORIES

A. Insulation for Miscellaneous Voids:

1. Glass-Fiber Insulation: ASTM C764, Type II, loose fill; with maximum flame-spread and smoke-developed indexes of 5, per ASTM E84.

B. Adhesive for Bonding Insulation: Product compatible with insulation and air and water barrier materials, and with demonstrated capability to bond insulation securely to substrates without damaging insulation and substrates.

Copyright © 2025 by the American Institute of Architects. Warning: This AIA MasterSpec-based document is protected by U.S. Copyright Law and International Treaties. It was created by "Michael Shilale Architects, LLP" for "Renovation of Rockland Green Administrative Headquarters and Construction of an Immersive Theatre Experience". A valid, current MasterSpec license is required for editing and use of this document for any other project.(22360)

PART 3 - EXECUTION

3.1 PREPARATION

A. Clean substrates of substances that are harmful to insulation, including removing projections capable of puncturing insulation or vapor retarders, or that interfere with insulation attachment.

3.2 INSTALLATION, GENERAL

A. Comply with insulation manufacturer's written instructions applicable to products and applications.

B. Install insulation that is undamaged, dry, and unsoiled and that has not been left exposed to ice, rain, or snow at any time.

C. Install insulation with manufacturer's R-value label exposed after insulation is installed.

D. Extend insulation to envelop entire area to be insulated. Fit tightly around obstructions and fill voids with insulation. Remove projections that interfere with placement.

E. Provide sizes to fit applications and selected from manufacturer's standard thicknesses, widths, and lengths. Apply single layer of insulation units unless multiple layers are otherwise shown or required to make up total thickness or to achieve R-value.

3.3 INSTALLATION OF CAVITY-WALL INSULATION

A. Foam-Plastic Board Insulation: Install pads of adhesive spaced approximately 24 inches o.c. both ways on inside face and as recommended by manufacturer.

1. Fit courses of insulation between wall ties and other obstructions, with edges butted tightly in both directions, and with faces flush.
2. Press units firmly against inside substrates.
3. Supplement adhesive attachment of insulation by securing boards with two-piece wall ties designed for this purpose and specified in Section 042000 "Unit Masonry."

B. Cellular-Glass Board Insulation: Install with closely fitting joints using adhesive pad attachment method according to manufacturer's written instructions.

C. Mineral-Wool Board Insulation: Install insulation fasteners 4 inches from each corner of board insulation, at center of board, and as recommended by manufacturer.

1. Fit courses of insulation between masonry wall ties and other obstructions, with edges butted tightly in both directions, and with faces flush.
2. Press units firmly against inside substrates.

Copyright © 2025 by the American Institute of Architects. Warning: This AIA MasterSpec-based document is protected by U.S. Copyright Law and International Treaties. It was created by "Michael Shilale Architects, LLP" for "Renovation of Rockland Green Administrative Headquarters and Construction of an Immersive Theatre Experience". A valid, current MasterSpec license is required for editing and use of this document for any other project.(22360)

3.4 INSTALLATION OF INSULATION IN FRAMED CONSTRUCTION

A. Blanket Insulation: Install in cavities formed by framing members according to the following requirements:

1. Use insulation widths and lengths that fill the cavities formed by framing members. If more than one length is required to fill the cavities, provide lengths that will produce a snug fit between ends.
2. Place insulation in cavities formed by framing members to produce a friction fit between edges of insulation and adjoining framing members.
3. Maintain 3-inch clearance of insulation around recessed lighting fixtures not rated for or protected from contact with insulation.
4. For metal-framed wall cavities where cavity heights exceed 96 inches, support unfaced blankets mechanically and support faced blankets by taping flanges of insulation to flanges of metal studs.
5. For wood-framed construction, install blankets in accordance with ASTM C1320 and as follows:
   a. With faced blankets having stapling flanges, lap blanket flange over flange of adjacent blanket to maintain continuity of vapor retarder once finish material is installed over it.
6. Vapor-Retarder-Faced Blankets: Tape joints and ruptures in vapor-retarder facings, and seal each continuous area of insulation to ensure airtight installation.
   a. Exterior Walls: Set units with facing placed toward interior of construction .

B. Miscellaneous Voids: Install insulation in miscellaneous voids and cavity spaces where required to prevent gaps in insulation using the following materials:

1. Glass-Fiber Insulation: Compact to approximately 40 percent of normal maximum volume equaling a density of approximately 2.5 lb/cu. ft..

C. Loose-Fill Insulation: Apply in accordance with ASTM C1015 and manufacturer's written instructions.

1. Level horizontal applications to uniform thickness as indicated, lightly settle to uniform density, but do not compact excessively.
2. For cellulosic-fiber loose-fill insulation, comply with CIMA's Bulletin #2, "Standard Practice for Installing Cellulose Insulation."

D. Spray-Applied Cellulosic Insulation: Apply spray-applied insulation according to manufacturer's written instructions.

1. Do not apply insulation until installation of pipes, ducts, conduits, wiring, and electrical outlets in walls is completed and windows, electrical boxes, and other items not indicated to receive insulation are masked.
2. After insulation is applied, make flush with face of studs by using method recommended by insulation manufacturer.

Copyright © 2025 by the American Institute of Architects. Warning: This AIA MasterSpec-based document is protected by U.S. Copyright Law and International Treaties. It was created by "Michael Shilale Architects, LLP" for "Renovation of Rockland Green Administrative Headquarters and Construction of an Immersive Theatre Experience". A valid, current MasterSpec license is required for editing and use of this document for any other project.(22360)

3.5 PROTECTION

A. Protect installed insulation from damage due to harmful weather exposures, physical abuse, and other causes.

B. Provide temporary coverings or enclosures where insulation is subject to abuse and cannot be concealed and protected by permanent construction immediately after installation.

END OF SECTION 072100

Copyright © 2025 by the American Institute of Architects. Warning: This AIA MasterSpec-based document is protected by U.S. Copyright Law and International Treaties. It was created by "Michael Shilale Architects, LLP" for "Renovation of Rockland Green Administrative Headquarters and Construction of an Immersive Theatre Experience". A valid, current MasterSpec license is required for editing and use of this document for any other project.(22360)

SECTION 074113.16 - STANDING-SEAM METAL ROOF PANELS

PART 1 - GENERAL

1.1 RELATED DOCUMENTS

A. Drawings and general provisions of the Contract, including General and Supplementary Conditions and Division 01 Specification Sections, apply to this Section.

1.2 SUMMARY

A. Section includes standing-seam metal roof panels.

B. Related Sections:

1. Section 077253 "Snow Guards" for prefabricated devices designed to hold snow on the roof surface, allowing it to melt and drain off slowly.

1.3 PREINSTALLATION MEETINGS

A. Preinstallation Conference: Conduct conference at Project site .

1. Meet with Owner, Architect, Owner's insurer if applicable, metal panel Installer, metal panel manufacturer's representative, structural-support Installer, and installers whose work interfaces with or affects metal panels, including installers of roof accessories and roof-mounted equipment.
2. Review and finalize construction schedule and verify availability of materials, Installer's personnel, equipment, and facilities needed to make progress and avoid delays.
3. Review methods and procedures related to metal panel installation, including manufacturer's written instructions.
4. Examine support conditions for compliance with requirements, including alignment between and attachment to structural members.
5. Review structural loading limitations of purlins and rafters during and after roofing.
6. Review flashings, special details, drainage, penetrations, equipment curbs, and condition of other construction that affect metal panels.
7. Review governing regulations and requirements for insurance, certificates, and tests and inspections if applicable.
8. Review temporary protection requirements for metal panel systems during and after installation.
9. Review procedures for repair of metal panels damaged after installation.
10. Document proceedings, including corrective measures and actions required, and furnish copy of record to each participant.

Copyright © 2025 by the American Institute of Architects. Warning: This AIA MasterSpec-based document is protected by U.S. Copyright Law and International Treaties. It was created by "Michael Shilale Architects, LLP" for "Renovation of Rockland Green Administrative Headquarters and Construction of an Immersive Theatre Experience". A valid, current MasterSpec license is required for editing and use of this document for any other project.(22360)

1.4 ACTION SUBMITTALS

A. Product Data: For each type of product.

1. Include construction details, material descriptions, dimensions of individual components and profiles, and finishes for each type of panel and accessory.

B. Shop Drawings:

1. Include fabrication and installation layouts of metal panels; details of edge conditions, joints, panel profiles, corners, anchorages, attachment system, trim, flashings, closures, and accessories; and special details. Shop Drawings shall be signed/sealed by NYS PE. Drawing shall include roofing system and connections to existing steel frame. Design shall comply with NYS building Code.
2. Accessories: Include details of the flashing, trim, and anchorage systems, at a scale of not less than 1-1/2 inches per 12 inches.

C. Samples for Initial Selection: For each type of metal panel indicated with factory-applied color finishes.

1. Include similar Samples of trim and accessories involving color selection.

D. Samples for Verification: For each type of exposed finish required, prepared on Samples of size indicated below.

1. Metal Panels: 12 inches long by actual panel width. Include clips, fasteners, closures, and other metal panel accessories.

1.5 INFORMATIONAL SUBMITTALS

A. Qualification Data: For Installer.

B. Product Test Reports: For each product, for tests performed by a qualified testing agency.

C. Field quality-control reports.

D. Sample Warranties: For special warranties.

1.6 CLOSEOUT SUBMITTALS

A. Maintenance Data: For metal panels to include in maintenance manuals.

1.7 QUALITY ASSURANCE

A. Installer Qualifications: An entity that employs installers and supervisors who are trained and approved by manufacturer.

Copyright © 2025 by the American Institute of Architects. Warning: This AIA MasterSpec-based document is protected by U.S. Copyright Law and International Treaties. It was created by "Michael Shilale Architects, LLP" for "Renovation of Rockland Green Administrative Headquarters and Construction of an Immersive Theatre Experience". A valid, current MasterSpec license is required for editing and use of this document for any other project.(22360)

B. UL-Certified, Portable Roll-Forming Equipment: UL-certified, portable roll-forming equipment capable of producing metal panels warranted by manufacturer to be the same as factory-formed products. Maintain UL certification of portable roll-forming equipment for duration of work.

C. Mockups: Build mockups to verify selections made under Sample submittals and to demonstrate aesthetic effects and set quality standards for fabrication and installation.

1. Build mockup of typical roof area and eave , including fascia, and soffit as shown on Drawings; approximately 12 feet square by full thickness, including attachments , underlayment, and accessories.
2. Approval of mockups does not constitute approval of deviations from the Contract Documents contained in mockups unless Architect specifically approves such deviations in writing.
3. Approved mockups may become part of the completed Work if undisturbed at time of Substantial Completion.

1.8 DELIVERY, STORAGE, AND HANDLING

A. Deliver components, metal panels, and other manufactured items so as not to be damaged or deformed. Package metal panels for protection during transportation and handling.

B. Unload, store, and erect metal panels in a manner to prevent bending, warping, twisting, and surface damage.

C. Stack metal panels horizontally on platforms or pallets, covered with suitable weathertight and ventilated covering. Store metal panels to ensure dryness, with positive slope for drainage of water. Do not store metal panels in contact with other materials that might cause staining, denting, or other surface damage.

D. Retain strippable protective covering on metal panels during installation.

1.9 FIELD CONDITIONS

A. Weather Limitations: Proceed with installation only when existing and forecasted weather conditions permit assembly of metal panels to be performed according to manufacturers' written instructions and warranty requirements.

1.10 COORDINATION

A. Coordinate sizes and locations of roof curbs, equipment supports, and roof penetrations with actual equipment provided.

B. Coordinate metal panel installation with rain drainage work, flashing, trim, construction of soffits, and other adjoining work to provide a leakproof, secure, and noncorrosive installation.

Copyright © 2025 by the American Institute of Architects. Warning: This AIA MasterSpec-based document is protected by U.S. Copyright Law and International Treaties. It was created by "Michael Shilale Architects, LLP" for "Renovation of Rockland Green Administrative Headquarters and Construction of an Immersive Theatre Experience". A valid, current MasterSpec license is required for editing and use of this document for any other project.(22360)

1.11 WARRANTY

A. Special Warranty: Manufacturer's standard form in which manufacturer agrees to repair or replace components of metal panel systems that fail in materials or workmanship within specified warranty period.

1. Failures include, but are not limited to, the following:
   a. Structural failures including rupturing, cracking, or puncturing.
   b. Deterioration of metals and other materials beyond normal weathering.
2. Warranty Period: Two years from date of Substantial Completion.

B. Special Warranty on Panel Finishes: Manufacturer's standard form in which manufacturer agrees to repair finish or replace metal panels that show evidence of deterioration of factory-applied finishes within specified warranty period.

1. Exposed Panel Finish: Deterioration includes, but is not limited to, the following:
   a. Color fading more than 5 Hunter units when tested according to ASTM D 2244.
   b. Chalking in excess of a No. 8 rating when tested according to ASTM D 4214.
   c. Cracking, checking, peeling, or failure of paint to adhere to bare metal.
2. Finish Warranty Period: 20 years from date of Substantial Completion.

C. Special Weathertightness Warranty: Manufacturer's standard form in which manufacturer agrees to repair or replace standing-seam metal roof panel assemblies that fail to remain weathertight, including leaks, within specified warranty period.

1. Warranty Period: 20 years from date of Substantial Completion.

PART 2 - PRODUCTS

2.1 PERFORMANCE REQUIREMENTS

A. Air Infiltration: Air leakage of not more than 0.06 cfm/sq. ft. when tested according to ASTM E 1680 or ASTM E 283 at the following test-pressure difference:

1. Test-Pressure Difference: 1.57 lbf/sq. ft. .

B. Water Penetration under Static Pressure: No water penetration when tested according to ASTM E 1646 or ASTM E 331 at the following test-pressure difference:

1. Test-Pressure Difference: 2.86 lbf/sq. ft. .

C. Hydrostatic-Head Resistance: No water penetration when tested according to ASTM E 2140.

D. Wind-Uplift Resistance: Provide metal roof panel assemblies that comply with UL 580 for wind-uplift-resistance class indicated.

1. Uplift Rating: UL 90.

Copyright © 2025 by the American Institute of Architects. Warning: This AIA MasterSpec-based document is protected by U.S. Copyright Law and International Treaties. It was created by "Michael Shilale Architects, LLP" for "Renovation of Rockland Green Administrative Headquarters and Construction of an Immersive Theatre Experience". A valid, current MasterSpec license is required for editing and use of this document for any other project.(22360)

E. FM Global Listing: Provide metal roof panels and component materials that comply with requirements in FM Global 4471 as part of a panel roofing system and that are listed in FM Global's "Approval Guide" for Class 1 or noncombustible construction, as applicable. Identify materials with FM Global markings.

1. Fire/Windstorm Classification: Class 1A- 90 .
2. Hail Resistance: SH.

F. Thermal Movements: Allow for thermal movements from ambient and surface temperature changes by preventing buckling, opening of joints, overstressing of components, failure of joint sealants, failure of connections, and other detrimental effects. Base calculations on surface temperatures of materials due to both solar heat gain and nighttime-sky heat loss.

1. Temperature Change (Range): 120 deg F , ambient; 180 deg F , material surfaces .

2.2 STANDING-SEAM METAL ROOF PANELS

A. General: Provide factory-formed metal roof panels designed to be installed by lapping and interconnecting raised side edges of adjacent panels with joint type indicated and mechanically attaching panels to supports using concealed clips in side laps. Include clips, cleats, pressure plates, and accessories required for weathertight installation.

1. Steel Panel Systems: Unless more stringent requirements are indicated, comply with ASTM E 1514.
2. Aluminum Panel Systems: Unless more stringent requirements are indicated, comply with ASTM E 1637.

B. Vertical-Rib, Seamed-Joint, Standing-Seam Metal Roof Panels : Formed with vertical ribs at panel edges and a flat pan between ribs; designed for sequential installation by mechanically attaching panels to supports using concealed clips located under one side of panels, engaging opposite edge of adjacent panels, and mechanically seaming panels together.

1. Manufacturers: Subject to compliance with requirements, provide products by one of the following:
   a. CENTRIA Architectural Systems.
   b. MBCI.
   c. PAC-CLAD; Petersen Aluminum Corporation.
2. Metallic-Coated Steel Sheet: Zinc-coated (galvanized) steel sheet complying with ASTM A 653/A 653M, G90 coating designation, or aluminum-zinc alloy-coated steel sheet complying with ASTM A 792/A 792M, Class AZ50 coating designation; structural quality. Prepainted by the coil-coating process to comply with ASTM A 755/A 755M.
   a. Nominal Thickness: 0.028 inch .
   b. Exterior Finish: Two-coat fluoropolymer .
   c. Color: As selected by Architect from manufacturer's full range .
3. Clips: Two-piece floating to accommodate thermal movement.
   a. Material: 0.028-inch- nominal thickness, zinc-coated (galvanized) or aluminum-zinc alloy-coated steel sheet.
4. Joint Type: Single folded .
5. Panel Coverage: 16 inches .

Copyright © 2025 by the American Institute of Architects. Warning: This AIA MasterSpec-based document is protected by U.S. Copyright Law and International Treaties. It was created by "Michael Shilale Architects, LLP" for "Renovation of Rockland Green Administrative Headquarters and Construction of an Immersive Theatre Experience". A valid, current MasterSpec license is required for editing and use of this document for any other project.(22360)

6. Panel Height: 2.0 inches .

2.3 MISCELLANEOUS MATERIALS

A. Miscellaneous Metal Subframing and Furring: ASTM C 645; cold-formed, metallic-coated steel sheet, ASTM A 653/A 653M, G90 coating designation or ASTM A 792/A 792M, Class AZ50 coating designation unless otherwise indicated. Provide manufacturer's standard sections as required for support and alignment of metal panel system.

B. Panel Accessories: Provide components required for a complete, weathertight panel system including trim, copings, fasciae, mullions, sills, corner units, clips, flashings, sealants, gaskets, fillers, closure strips, and similar items. Match material and finish of metal panels unless otherwise indicated.

1. Closures: Provide closures at eaves and ridges, fabricated of same metal as metal panels.
2. Backing Plates: Provide metal backing plates at panel end splices, fabricated from material recommended by manufacturer.
3. Closure Strips: Closed-cell, expanded, cellular, rubber or crosslinked, polyolefin-foam or closed-cell laminated polyethylene; minimum 1-inch- thick, flexible closure strips; cut or premolded to match metal panel profile. Provide closure strips where indicated or necessary to ensure weathertight construction.

C. Flashing and Trim: Provide flashing and trim formed from same material as metal panels as required to seal against weather and to provide finished appearance. Locations include, but are not limited to, eaves, rakes, corners, bases, framed openings, ridges, fasciae, and fillers. Finish flashing and trim with same finish system as adjacent metal panels.

D. Gutters: Formed from same material as roof panels, complete with end pieces, outlet tubes, and other special pieces as required. Fabricate in minimum 96-inch- long sections, of size and metal thickness according to SMACNA's "Architectural Sheet Metal Manual." Furnish gutter supports spaced a maximum of 36 inches o.c., fabricated from same metal as gutters. Provide wire ball strainers of compatible metal at outlets. Finish gutters to match .

E. Downspouts: Formed from same material as roof panels. Fabricate in 10-foot- long sections, complete with formed elbows and offsets, of size and metal thickness according to SMACNA's "Architectural Sheet Metal Manual." Finish downspouts to match gutters.

F. Roof Curbs: Fabricated from same material as roof panels, 0.048-inch nominal thickness; with bottom of skirt profiled to match roof panel profiles and with welded top box and integral full-length cricket. Fabricate curb subframing of 0.060-inch- nominal thickness, angle-, C-, or Z-shaped steel sheet. Fabricate curb and subframing to withstand indicated loads of size and height indicated. Finish roof curbs to match metal roof panels.

1. Insulate roof curb with 1-inch- thick, rigid insulation.

G. Panel Fasteners: Self-tapping screws designed to withstand design loads.

H. Panel Sealants: Provide sealant type recommended by manufacturer that are compatible with panel materials, are nonstaining, and do not damage panel finish.

Copyright © 2025 by the American Institute of Architects. Warning: This AIA MasterSpec-based document is protected by U.S. Copyright Law and International Treaties. It was created by "Michael Shilale Architects, LLP" for "Renovation of Rockland Green Administrative Headquarters and Construction of an Immersive Theatre Experience". A valid, current MasterSpec license is required for editing and use of this document for any other project.(22360)

1. Sealant Tape: Pressure-sensitive, 100 percent solids, gray polyisobutylene compound sealant tape with release-paper backing. Provide permanently elastic, nonsag, nontoxic, nonstaining tape 1/2 inch wide and 1/8 inch thick.
2. Joint Sealant: ASTM C 920; elastomeric polyurethane or silicone sealant; of type, grade, class, and use classifications required to seal joints in metal panels and remain weathertight; and as recommended in writing by metal panel manufacturer.
3. Butyl-Rubber-Based, Solvent-Release Sealant: ASTM C 1311.

2.4 FABRICATION

A. General: Fabricate and finish metal panels and accessories at the factory, by manufacturer's standard procedures and processes, as necessary to fulfill indicated performance requirements demonstrated by laboratory testing. Comply with indicated profiles and with dimensional and structural requirements.

B. On-Site Fabrication: Subject to compliance with requirements of this Section, metal panels may be fabricated on-site using UL-certified, portable roll-forming equipment if panels are of same profile and warranted by manufacturer to be equal to factory-formed panels. Fabricate according to equipment manufacturer's written instructions and to comply with details shown.

C. Provide panel profile, including major ribs and intermediate stiffening ribs, if any, for full length of panel.

D. Fabricate metal panel joints with factory-installed captive gaskets or separator strips that provide a weathertight seal and prevent metal-to-metal contact, and that minimize noise from movements.

E. Sheet Metal Flashing and Trim: Fabricate flashing and trim to comply with manufacturer's recommendations and recommendations in SMACNA's "Architectural Sheet Metal Manual" that apply to design, dimensions, metal, and other characteristics of item indicated.

1. Form exposed sheet metal accessories that are without excessive oil canning, buckling, and tool marks and that are true to line and levels indicated, with exposed edges folded back to form hems.
2. Seams for Aluminum: Fabricate nonmoving seams with flat-lock seams. Form seams and seal with epoxy seam sealer. Rivet joints for additional strength.
3. Seams for Other Than Aluminum: Fabricate nonmoving seams in accessories with flat-lock seams. Tin edges to be seamed, form seams, and solder.
4. Sealed Joints: Form nonexpansion, but movable, joints in metal to accommodate sealant and to comply with SMACNA standards.
5. Conceal fasteners and expansion provisions where possible. Exposed fasteners are not allowed on faces of accessories exposed to view.
6. Fabricate cleats and attachment devices from same material as accessory being anchored or from compatible, noncorrosive metal recommended in writing by metal panel manufacturer.
   a. Size: As recommended by SMACNA's "Architectural Sheet Metal Manual" or metal panel manufacturer for application, but not less than thickness of metal being secured.

Copyright © 2025 by the American Institute of Architects. Warning: This AIA MasterSpec-based document is protected by U.S. Copyright Law and International Treaties. It was created by "Michael Shilale Architects, LLP" for "Renovation of Rockland Green Administrative Headquarters and Construction of an Immersive Theatre Experience". A valid, current MasterSpec license is required for editing and use of this document for any other project.(22360)

2.5 FINISHES

A. Protect mechanical and painted finishes on exposed surfaces from damage by applying a strippable, temporary protective covering before shipping.

B. Appearance of Finished Work: Variations in appearance of abutting or adjacent pieces are acceptable if they are within one-half of the range of approved Samples. Noticeable variations in same piece are unacceptable. Variations in appearance of other components are acceptable if they are within the range of approved Samples and are assembled or installed to minimize contrast.

C. Steel Panels and Accessories:

1. Two-Coat Fluoropolymer: AAMA 621. Fluoropolymer finish containing not less than 70 percent PVDF resin by weight in color coat. Prepare, pretreat, and apply coating to exposed metal surfaces to comply with coating and resin manufacturers' written instructions.
2. Concealed Finish: Apply pretreatment and manufacturer's standard white or light-colored acrylic or polyester backer finish consisting of prime coat and wash coat with a minimum total dry film thickness of 0.5 mil.

PART 3 - EXECUTION

3.1 EXAMINATION

A. Examine substrates, areas, and conditions, with Installer present, for compliance with requirements for installation tolerances, metal panel supports, and other conditions affecting performance of the Work.

1. Examine primary and secondary roof framing to verify that rafters, purlins, angles, channels, and other structural panel support members and anchorages have been installed within alignment tolerances required by metal roof panel manufacturer.
2. Examine solid roof sheathing to verify that sheathing joints are supported by framing or blocking and that installation is within flatness tolerances required by metal roof panel manufacturer.
   a. Verify that air- or water-resistive barriers have been installed over sheathing or backing substrate to prevent air infiltration or water penetration.

B. Examine roughing-in for components and systems penetrating metal panels to verify actual locations of penetrations relative to seam locations of metal panels before installation.

C. Proceed with installation only after unsatisfactory conditions have been corrected.

Copyright © 2025 by the American Institute of Architects. Warning: This AIA MasterSpec-based document is protected by U.S. Copyright Law and International Treaties. It was created by "Michael Shilale Architects, LLP" for "Renovation of Rockland Green Administrative Headquarters and Construction of an Immersive Theatre Experience". A valid, current MasterSpec license is required for editing and use of this document for any other project.(22360)

3.2 PREPARATION

A. Miscellaneous Supports: Install subframing, furring, and other miscellaneous panel support members and anchorages according to ASTM C 754 and metal panel manufacturer's written recommendations.

3.3 METAL PANEL INSTALLATION

A. General: Install metal panels according to manufacturer's written instructions in orientation, sizes, and locations indicated. Install panels perpendicular to supports unless otherwise indicated. Anchor metal panels and other components of the Work securely in place, with provisions for thermal and structural movement.

1. Shim or otherwise plumb substrates receiving metal panels.
2. Flash and seal metal panels at perimeter of all openings. Fasten with self-tapping screws. Do not begin installation until air- or water-resistive barriers and flashings that will be concealed by metal panels are installed.
3. Install screw fasteners in predrilled holes.
4. Locate and space fastenings in uniform vertical and horizontal alignment.
5. Install flashing and trim as metal panel work proceeds.
6. Locate panel splices over, but not attached to, structural supports. Stagger panel splices and end laps to avoid a four-panel lap splice condition.
7. Align bottoms of metal panels and fasten with blind rivets, bolts, or self-tapping screws. Fasten flashings and trim around openings and similar elements with self-tapping screws.
8. Provide weathertight escutcheons for pipe- and conduit-penetrating panels.

B. Fasteners:

1. Steel Panels: Use stainless-steel fasteners for surfaces exposed to the exterior; use galvanized-steel fasteners for surfaces exposed to the interior.

C. Anchor Clips: Anchor metal roof panels and other components of the Work securely in place, using manufacturer's approved fasteners according to manufacturers' written instructions.

D. Metal Protection: Where dissimilar metals contact each other or corrosive substrates, protect against galvanic action as recommended in writing by metal panel manufacturer.

E. Standing-Seam Metal Roof Panel Installation: Fasten metal roof panels to supports with concealed clips at each standing-seam joint at location, spacing, and with fasteners recommended in writing by manufacturer.

1. Install clips to supports with self-tapping fasteners.
2. Install pressure plates at locations indicated in manufacturer's written installation instructions.
3. Seamed Joint: Crimp standing seams with manufacturer-approved, motorized seamer tool so clip, metal roof panel, and factory-applied sealant are completely engaged.
4. Watertight Installation:

Copyright © 2025 by the American Institute of Architects. Warning: This AIA MasterSpec-based document is protected by U.S. Copyright Law and International Treaties. It was created by "Michael Shilale Architects, LLP" for "Renovation of Rockland Green Administrative Headquarters and Construction of an Immersive Theatre Experience". A valid, current MasterSpec license is required for editing and use of this document for any other project.(22360)

a. Apply a continuous ribbon of sealant or tape to seal joints of metal panels, using sealant or tape as recommend in writing by manufacturer as needed to make panels watertight.
b. Provide sealant or tape between panels and protruding equipment, vents, and accessories.
c. At panel splices, nest panels with minimum 6-inch end lap, sealed with sealant and fastened together by interlocking clamping plates.

F. Accessory Installation: Install accessories with positive anchorage to building and weathertight mounting, and provide for thermal expansion. Coordinate installation with flashings and other components.

1. Install components required for a complete metal panel system including trim, copings, corners, seam covers, flashings, sealants, gaskets, fillers, closure strips, and similar items. Provide types indicated by metal roof panel manufacturers; or, if not indicated, types recommended by metal roof panel manufacturer.

G. Flashing and Trim: Comply with performance requirements, manufacturer's written installation instructions, and SMACNA's "Architectural Sheet Metal Manual." Provide concealed fasteners where possible, and set units true to line and level as indicated. Install work with laps, joints, and seams that will be permanently watertight and weather resistant.

1. Install exposed flashing and trim that is without buckling and tool marks, and that is true to line and levels indicated, with exposed edges folded back to form hems. Install sheet metal flashing and trim to fit substrates and achieve waterproof and weather-resistant performance.
2. Expansion Provisions: Provide for thermal expansion of exposed flashing and trim. Space movement joints at a maximum of 10 feet with no joints allowed within 24 inches of corner or intersection. Where lapped expansion provisions cannot be used or would not be sufficiently weather resistant and waterproof, form expansion joints of intermeshing hooked flanges, not less than 1 inch deep, filled with mastic sealant (concealed within joints).

H. Gutters: Join sections with riveted and soldered or lapped and sealed joints. Attach gutters to eave with gutter hangers spaced not more than 36 inches o.c. using manufacturer's standard fasteners. Provide end closures and seal watertight with sealant. Provide for thermal expansion.

I. Downspouts: Join sections with telescoping joints. Provide fasteners designed to hold downspouts securely 1 inch away from walls; locate fasteners at top and bottom and at approximately 60 inches o.c. in between.

1. Provide elbows at base of downspouts to direct water away from building.
2. Connect downspouts to underground drainage system indicated.

J. Roof Curbs: Install flashing around bases where they meet metal roof panels.

K. Pipe Flashing: Form flashing around pipe penetration and metal roof panels. Fasten and seal to metal roof panels as recommended by manufacturer.

Copyright © 2025 by the American Institute of Architects. Warning: This AIA MasterSpec-based document is protected by U.S. Copyright Law and International Treaties. It was created by "Michael Shilale Architects, LLP" for "Renovation of Rockland Green Administrative Headquarters and Construction of an Immersive Theatre Experience". A valid, current MasterSpec license is required for editing and use of this document for any other project.(22360)

3.4 ERECTION TOLERANCES

A. Installation Tolerances: Shim and align metal panel units within installed tolerance of 1/4 inch in 20 feet on slope and location lines as indicated and within 1/8-inch offset of adjoining faces and of alignment of matching profiles.

3.5 FIELD QUALITY CONTROL

A. Remove and replace applications of metal roof panels where tests and inspections indicate that they do not comply with specified requirements.

B. Additional tests and inspections, at Contractor's expense, are performed to determine compliance of replaced or additional work with specified requirements.

C. Prepare test and inspection reports.

3.6 CLEANING AND PROTECTION

A. Remove temporary protective coverings and strippable films, if any, as metal panels are installed, unless otherwise indicated in manufacturer's written installation instructions. On completion of metal panel installation, clean finished surfaces as recommended by metal panel manufacturer. Maintain in a clean condition during construction.

B. Replace metal panels that have been damaged or have deteriorated beyond successful repair by finish touchup or similar minor repair procedures.

END OF SECTION 074113.16

Copyright © 2025 by the American Institute of Architects. Warning: This AIA MasterSpec-based document is protected by U.S. Copyright Law and International Treaties. It was created by "Michael Shilale Architects, LLP" for "Renovation of Rockland Green Administrative Headquarters and Construction of an Immersive Theatre Experience". A valid, current MasterSpec license is required for editing and use of this document for any other project.(22360)

SECTION 075323 - ETHYLENE-PROPYLENE-DIENE-MONOMER (EPDM) ROOFING

PART 1 - GENERAL

1.1 RELATED DOCUMENTS

A. Drawings and general provisions of the Contract, including General and Supplementary Conditions and Division 01 Specification Sections, apply to this Section.

1.2 SUMMARY

A. Section Includes:

1. Adhered ethylene-propylene-diene-terpolymer (EPDM) roofing system.
2. Substrate board.
3. Roof insulation.
4. Cover board.
5. Walkways.

B. Section includes installation of sound-absorbing insulation strips in ribs of roof deck. Sound-absorbing insulation strips are furnished under Section 053100 "Steel Decking."

C. Related Requirements:

1. Section 061053 "Miscellaneous Rough Carpentry" for wood nailers, curbs, and blocking.
2. Section 076200 "Sheet Metal Flashing and Trim" for metal roof flashings and counterflashings.
3. Section 077100 "Roof Specialties" for manufactured copings and roof edge flashings.
4. Section 077129 "Manufactured Roof Expansion Joints" for manufactured roof expansion-joint assemblies.
5. Section 079200 "Joint Sealants" for joint sealants, joint fillers, and joint preparation.

1.3 DEFINITIONS

A. Roofing Terminology: Definitions in ASTM D 1079 and glossary of NRCA's "The NRCA Roofing Manual: Membrane Roof Systems" apply to work of this Section.

1.4 PREINSTALLATION MEETINGS

A. Preliminary Roofing Conference: Before starting roof deck construction, conduct conference at Project site .

1. Meet with Owner, Architect, Owner's insurer if applicable, testing and inspecting agency representative, roofing Installer, roofing system manufacturer's representative, deck

Copyright © 2025 by the American Institute of Architects. Warning: This AIA MasterSpec-based document is protected by U.S. Copyright Law and International Treaties. It was created by "Michael Shilale Architects, LLP" for "Renovation of Rockland Green Administrative Headquarters and Construction of an Immersive Theatre Experience". A valid, current MasterSpec license is required for editing and use of this document for any other project.(22360)

Installer, air barrier Installer, and installers whose work interfaces with or affects roofing, including installers of roof accessories and roof-mounted equipment.

2. Review methods and procedures related to roofing installation, including manufacturer's written instructions.
3. Review and finalize construction schedule, and verify availability of materials, Installer's personnel, equipment, and facilities needed to make progress and avoid delays.
4. Review deck substrate requirements for conditions and finishes, including flatness and fastening.
5. Review structural loading limitations of roof deck during and after roofing.
6. Review base flashings, special roofing details, roof drainage, roof penetrations, equipment curbs, and condition of other construction that affects roofing system.
7. Review governing regulations and requirements for insurance and certificates if applicable.
8. Review temporary protection requirements for roofing system during and after installation.
9. Review roof observation and repair procedures after roofing installation.

B. Preinstallation Roofing Conference: Conduct conference at Project site .

1. Meet with Owner, Architect, Owner's insurer if applicable, testing and inspecting agency representative, roofing Installer, roofing system manufacturer's representative, deck Installer, air barrier Installer, and installers whose work interfaces with or affects roofing, including installers of roof accessories and roof-mounted equipment.
2. Review methods and procedures related to roofing installation, including manufacturer's written instructions.
3. Review and finalize construction schedule, and verify availability of materials, Installer's personnel, equipment, and facilities needed to make progress and avoid delays.
4. Examine deck substrate conditions and finishes, including flatness and fastening.
5. Review structural loading limitations of roof deck during and after roofing.
6. Review base flashings, special roofing details, roof drainage, roof penetrations, equipment curbs, and condition of other construction that affects roofing system.
7. Review governing regulations and requirements for insurance and certificates if applicable.
8. Review temporary protection requirements for roofing system during and after installation.
9. Review roof observation and repair procedures after roofing installation.

1.5 ACTION SUBMITTALS

A. Product Data: For each type of product.

1. For insulation and roof system component fasteners, include copy of FM Approvals' RoofNav listing.

B. Shop Drawings: Include roof plans, sections, details, and attachments to other work, including the following:

1. Layout and thickness if insulation.
2. Base flashings and membrane terminations.

Copyright © 2025 by the American Institute of Architects. Warning: This AIA MasterSpec-based document is protected by U.S. Copyright Law and International Treaties. It was created by "Michael Shilale Architects, LLP" for "Renovation of Rockland Green Administrative Headquarters and Construction of an Immersive Theatre Experience". A valid, current MasterSpec license is required for editing and use of this document for any other project.(22360)

3. Flashing details at penetrations.
4. Tapered insulation, thickness, and slopes.
5. Roof plan showing orientation of steel roof deck and orientation of roof membrane and fastening spacings and patterns for mechanically fastened roofing system.
6. Insulation fastening patterns for corner, perimeter, and field-of-roof locations.
7. Tie-in with air barrier.

C. Samples for Verification: For the following products:

1. Roof membrane and flashings of color required.
2. Walkway pads or rolls, of color required.

D. Wind Uplift Resistance Submittal: For roofing system, indicating compliance with wind uplift performance requirements.

1.6 INFORMATIONAL SUBMITTALS

A. Qualification Data: For Installer and manufacturer.

B. Manufacturer Certificates:

1. Performance Requirement Certificate: Signed by roof membrane manufacturer, certifying that roofing system complies with requirements specified in "Performance Requirements" Article.
   a. Submit evidence of complying with performance requirements.
2. Special Warranty Certificate: Signed by roof membrane manufacturer, certifying that all materials supplied under this Section are acceptable for special warranty.

C. Product Test Reports: For components of roof membrane and insulation, for tests performed by a qualified testing agency, indicating compliance with specified requirements.

D. Evaluation Reports: For components of roofing system, from ICC-ES.

1. Field Test Reports:
2. Concrete internal relative humidity test reports.
3. Fastener-pullout test results and manufacturer's revised requirements for fastener patterns.

E. Sample Warranties: For manufacturer's special warranties.

1.7 CLOSEOUT SUBMITTALS

A. Maintenance Data: For roofing system to include in maintenance manuals.

Copyright © 2025 by the American Institute of Architects. Warning: This AIA MasterSpec-based document is protected by U.S. Copyright Law and International Treaties. It was created by "Michael Shilale Architects, LLP" for "Renovation of Rockland Green Administrative Headquarters and Construction of an Immersive Theatre Experience". A valid, current MasterSpec license is required for editing and use of this document for any other project.(22360)

1.8 QUALITY ASSURANCE

A. Manufacturer Qualifications: A qualified manufacturer that is listed in FM Approvals' RoofNav for roofing system identical to that used for this Project.

B. Installer Qualifications: A qualified firm that is approved, authorized, or licensed by roofing system manufacturer to install manufacturer's product and that is eligible to receive manufacturer's special warranty.

1.9 DELIVERY, STORAGE, AND HANDLING

A. Deliver roofing materials to Project site in original containers with seals unbroken and labeled with manufacturer's name, product brand name and type, date of manufacture, approval or listing agency markings, and directions for storing and mixing with other components.

B. Store liquid materials in their original undamaged containers in a clean, dry, protected location and within the temperature range required by roofing system manufacturer. Protect stored liquid material from direct sunlight.

1. Discard and legally dispose of liquid material that cannot be applied within its stated shelf life.

C. Protect roof insulation materials from physical damage and from deterioration by sunlight, moisture, soiling, and other sources. Store in a dry location. Comply with insulation manufacturer's written instructions for handling, storing, and protecting during installation.

D. Handle and store roofing materials, and place equipment in a manner to avoid permanent deflection of deck.

1.10 FIELD CONDITIONS

A. Weather Limitations: Proceed with installation only when existing and forecasted weather conditions permit roofing system to be installed according to manufacturer's written instructions and warranty requirements.

1.11 WARRANTY

A. Special Warranty: Manufacturer agrees to repair or replace components of roofing system that fail in materials or workmanship within specified warranty period.

1. Special warranty includes roof membrane, base flashings, roof insulation, fasteners, cover boards, substrate board, and other components of roofing system.
2. Warranty Period: 20 years from Date of Substantial Completion.

B. Special Project Warranty: Submit roofing Installer's warranty, on warranty form at end of this Section, signed by Installer, covering the Work of this Section, including all components of

Copyright © 2025 by the American Institute of Architects. Warning: This AIA MasterSpec-based document is protected by U.S. Copyright Law and International Treaties. It was created by "Michael Shilale Architects, LLP" for "Renovation of Rockland Green Administrative Headquarters and Construction of an Immersive Theatre Experience". A valid, current MasterSpec license is required for editing and use of this document for any other project.(22360)

roofing system such as roof membrane, base flashing, roof insulation, fasteners, cover boards, substrate boards, vapor retarders, and walkway products, for the following warranty period:

1. Warranty Period: Two years from Date of Substantial Completion.

PART 2 - PRODUCTS

2.1 PERFORMANCE REQUIREMENTS

A. General Performance: Installed roofing system and base flashings shall withstand specified uplift pressures, thermally induced movement, and exposure to weather without failure due to defective manufacture, fabrication, installation, or other defects in construction. Roofing and flashings shall remain watertight.

1. Accelerated Weathering: Roof membrane shall withstand 2000 hours of exposure when tested according to ASTM G 152, ASTM G 154, or ASTM G 155.
2. Impact Resistance: Roof membrane shall resist impact damage when tested according to ASTM D 3746, ASTM D 4272, or the Resistance to Foot Traffic Test in FM Approvals 4470.

B. Material Compatibility: Roofing materials shall be compatible with one another and adjacent materials under conditions of service and application required, as demonstrated by roof membrane manufacturer based on testing and field experience.

C. Wind Uplift Resistance: Design roofing system to resist the following wind uplift pressures when tested according to FM Approvals 4474, UL 580, or UL 1897:

1. ASCE 7 minimum uplift resistance, calculated using a safety factor of 2:
   a. Field Zone: 70 psf
   b. Perimeter Zones: 115 psf
   c. Corner Zone: 175 psf

D. Exterior Fire-Test Exposure: ASTM E 108 or UL 790, Class A ; for application and roof slopes indicated; testing by a qualified testing agency. Identify products with appropriate markings of applicable testing agency.

E. Fire-Resistance Ratings: Comply with fire-resistance-rated assembly designs indicated. Identify products with appropriate markings of applicable testing agency.

2.2 ETHYLENE-PROPYLENE-DIENE-TERPOLYMER (EPDM) ROOFING

A. 1. Unreinforced 60 mils thick, fire retardant, EPDM (Ethylene Propylene Diene Monomer) sheet membrane conforming to the following minimum physical properties.

1. PROPERTY TEST METHOD SPECIFICATION
   a. Color — Gray/Black
   b. Tensile Strength ASTM D-412 1305 psi min.

Copyright © 2025 by the American Institute of Architects. Warning: This AIA MasterSpec-based document is protected by U.S. Copyright Law and International Treaties. It was created by "Michael Shilale Architects, LLP" for "Renovation of Rockland Green Administrative Headquarters and Construction of an Immersive Theatre Experience". A valid, current MasterSpec license is required for editing and use of this document for any other project.(22360)

c. Elongation ASTM D-412 300% min
d. Tear Strength ASTM D-624 150 lb/in min
e. Ozone Resistance ASTM D-1149 No cracks, 7 days/100 pphm/100ºF/50% strain
f. Heat Aging ASTM D-573 1200 psi min@ 200% elongation/4 wks/240ºF
g. Brittleness Temperature ASTM D-746 -49ºF
h. Water Vapor Permanence ASTM E-96 2.0 perm max
i. Thickness ASTM D-412 60 mils plus/minus 6 mils
j. Fire Retardant UL Class A

2.3 AUXILIARY ROOFING MATERIALS

A. General: Auxiliary materials recommended by roofing system manufacturer for intended use and compatible with other roofing components.

1. Adhesive and Sealants: Comply with VOC limits of authorities having jurisdiction.

B. Sheet Flashing: 60-mil- thick EPDM, partially cured or cured, according to application.

C. Protection Sheet: Epichlorohydrin or neoprene nonreinforced flexible sheet, 55 to 60 mils thick, recommended by EPDM manufacturer for resistance to hydrocarbons, non-aromatic solvents, grease, and oil.

D. Slip Sheet: Manufacturer's standard, of thickness required for application.

E. Vented Base Sheet: ASTM D 4897/D 4897M, Type II; nonperforated, asphalt-impregnated fiberglass reinforced, with mineral granular patterned surfacing on bottom surface.

F. Prefabricated Pipe Flashings: As recommended by roof membrane manufacturer.

G. Roof Vents: As recommended by roof membrane manufacturer.

1. Size: Not less than 4-inch diameter.

H. Bonding Adhesive: Manufacturer's standard.

I. Low-Rise, Urethane, Fabric-Backed Membrane Adhesive: Roof system manufacturer's standard spray-applied, low-rise, two-component urethane adhesive formulated for compatibility and use with fabric-backed membrane roofing.

J. Seaming Material: Single-component, butyl splicing adhesive and splice cleaner Manufacturer's standard, synthetic-rubber polymer primer and 3-inch- wide minimum, butyl splice tape with release film .

K. Lap Sealant: Manufacturer's standard, single-component sealant , colored to match membrane roofing.

L. Water Cutoff Mastic: Manufacturer's standard butyl mastic sealant.

Copyright © 2025 by the American Institute of Architects. Warning: This AIA MasterSpec-based document is protected by U.S. Copyright Law and International Treaties. It was created by "Michael Shilale Architects, LLP" for "Renovation of Rockland Green Administrative Headquarters and Construction of an Immersive Theatre Experience". A valid, current MasterSpec license is required for editing and use of this document for any other project.(22360)

M. Metal Termination Bars: Manufacturer's standard, predrilled stainless steel or aluminum bars, approximately 1 by 1/8 inch thick; with anchors.

N. Metal Battens: Manufacturer's standard, aluminum-zinc-alloy-coated or zinc-coated steel sheet, approximately 1 inch wide by 0.05 inch thick, prepunched.

O. Ballast Retaining Bar: Perimeter securement system consisting of a slotted extruded-aluminum retention bar with an integrated compression fastening strip.

1. Fasteners: 1-1/2-inch stainless steel fasteners with neoprene washers.

P. Fasteners: Factory-coated steel fasteners and metal or plastic plates complying with corrosion-resistance provisions in FM Approvals 4470, designed for fastening components to substrate, and acceptable to roofing system manufacturer.

Q. Miscellaneous Accessories: Provide pourable sealers, preformed cone and vent sheet flashings, molded pipe boot flashings, preformed inside and outside corner sheet flashings, reinforced EPDM securement strips, T-joint covers, in-seam sealants, termination reglets, cover strips, and other accessories.

1. Provide white flashing accessories for white EPDM membrane roofing.

2.4 SUBSTRATE BOARDS

A. Substrate Board: ASTM C 1177/C 1177M, glass-mat, water-resistant gypsum board or ASTM C 1278/C 1278M, fiber-reinforced gypsum board.

1. Thickness: 1/2 inch .
2. Surface Finish: Unprimed.

B. Fasteners: Factory-coated steel fasteners and metal or plastic plates complying with corrosion-resistance provisions in FM Approvals 4470, designed for fastening substrate panel to roof deck.

2.5 ROOF INSULATION

A. General: Preformed roof insulation boards manufactured or approved by EPDM roof membrane manufacturer.

B. Polyisocyanurate Board Insulation: ASTM C 1289, Type II, Class 1, Grade 2 , felt or glass-fiber mat facer on both major surfaces.

1. Compressive Strength: 20 psi .
2. Size: 48 by 96 inches.
3. Thickness:
   a. Base Layer: 2 inches .
   b. Upper Layer: as required by tapered design .

Copyright © 2025 by the American Institute of Architects. Warning: This AIA MasterSpec-based document is protected by U.S. Copyright Law and International Treaties. It was created by "Michael Shilale Architects, LLP" for "Renovation of Rockland Green Administrative Headquarters and Construction of an Immersive Theatre Experience". A valid, current MasterSpec license is required for editing and use of this document for any other project.(22360)

C. Tapered Insulation: Provide factory-tapered insulation boards.

1. Material: Match roof insulation .
2. Minimum Thickness: 1/4 inch.
3. Slope:
   a. Roof Field: 1/8 inch per foot unless otherwise indicated on Drawings.
   b. Saddles and Crickets: 1/2 inch per foot unless otherwise indicated on Drawings.

2.6 INSULATION ACCESSORIES

A. General: Roof insulation accessories recommended by insulation manufacturer for intended use and compatibility with other roofing system components.

B. Fasteners: Factory-coated steel fasteners and metal or plastic plates complying with corrosion-resistance provisions in FM Approvals 4470, designed for fastening roof insulation and cover boards to substrate, and acceptable to roofing system manufacturer.

C. Insulation Adhesive: Insulation manufacturer's recommended adhesive formulated to attach roof insulation to substrate or to another insulation layer as follows:

1. Bead-applied, low-rise, one-component or multicomponent urethane adhesive.
2. Full-spread, spray-applied, low-rise, two-component urethane adhesive.

D. Cover Board: ASTM C 1177/C 1177M, glass-mat, water-resistant gypsum substrate, or ASTM C 1278/C 1278M, fiber-reinforced gypsum board.

1. Thickness: 1/2 inch .
2. Surface Finish: Unprimed.

E. Cover Board: ASTM C 1325, fiber-mat-reinforced cementitious board,7/16-inch thick.

2.7 WALKWAYS

A. Flexible Walkways: Factory-formed, nonporous, heavy-duty, slip-resisting, surface-textured walkway pads or rolls, approximately 3/16 inch thick and acceptable to roofing system manufacturer.

1. Size: Approximately 36 by 60 inches.
2. Color: Contrasting with roof membrane.

PART 3 - EXECUTION

3.1 EXAMINATION

A. Examine substrates, areas, and conditions, with Installer present, for compliance with requirements and other conditions affecting performance of the Work.

Copyright © 2025 by the American Institute of Architects. Warning: This AIA MasterSpec-based document is protected by U.S. Copyright Law and International Treaties. It was created by "Michael Shilale Architects, LLP" for "Renovation of Rockland Green Administrative Headquarters and Construction of an Immersive Theatre Experience". A valid, current MasterSpec license is required for editing and use of this document for any other project.(22360)

1. Verify that roof openings and penetrations are in place, curbs are set and braced, and roof-drain bodies are securely clamped in place.
2. Verify that wood blocking, curbs, and nailers are securely anchored to roof deck at penetrations and terminations and that nailers match thicknesses of insulation.
3. Verify that surface plane flatness and fastening of steel roof deck complies with requirements in Section 053100 "Steel Decking."
4. Verify that minimum concrete drying period recommended by roofing system manufacturer has passed.
5. Verify that concrete substrate is visibly dry and free of moisture, and that minimum concrete internal relative humidity is not more than 75 percent, or as recommended by roofing system manufacturer when tested according to ASTM F 2170.
   a. Test Frequency: One test probe per each 1000 sq. ft. , or portion thereof,of roof deck, with not less than three test probes.
   b. Submit test reports within 24 hours of performing tests.
6. Verify that concrete-curing compounds that will impair adhesion of roofing components to roof deck have been removed.
7. Verify that joints in precast concrete roof decks have been grouted flush with top of concrete.

B. Proceed with installation only after unsatisfactory conditions have been corrected.

3.2 PREPARATION

A. Clean substrate of dust, debris, moisture, and other substances detrimental to roofing system installation according to roofing system manufacturer's written instructions. Remove sharp projections.

B. Prevent materials from entering and clogging roof drains and conductors and from spilling or migrating onto surfaces of other construction. Remove roof-drain plugs when no work is taking place or when rain is forecast.

3.3 ROOFING INSTALLATION, GENERAL

A. Install roofing system according to roofing system manufacturer's written instructions, FM Approvals' RoofNav assembly requirements, and FM Global Property Loss Prevention Data Sheet 1-29.

B. Complete terminations and base flashings and provide temporary seals to prevent water from entering completed sections of roofing system at end of workday or when rain is forecast. Remove and discard temporary seals before beginning work on adjoining roofing.

C. Install roof membrane and auxiliary materials to tie in to existing roofing to maintain weathertightness of transition.

Copyright © 2025 by the American Institute of Architects. Warning: This AIA MasterSpec-based document is protected by U.S. Copyright Law and International Treaties. It was created by "Michael Shilale Architects, LLP" for "Renovation of Rockland Green Administrative Headquarters and Construction of an Immersive Theatre Experience". A valid, current MasterSpec license is required for editing and use of this document for any other project.(22360)

3.4 SUBSTRATE BOARD INSTALLATION

A. Install substrate board with long joints in continuous straight lines, with end joints staggered not less than 24 inches in adjacent rows.

1. At steel roof decks, install substrate board at right angle to flutes of deck.
   a. Locate end joints over crests of steel roof deck.
2. Tightly butt substrate boards together.
3. Cut substrate board to fit tight around penetrations and projections, and to fit tight to intersecting sloping roof decks.
4. Fasten substrate board to top flanges of steel deck according to recommendations in FM Approvals' RoofNav assembly requirements and FM Global Property Loss Prevention Data Sheet 1-29 for specified Windstorm Resistance Classification.

3.5 INSULATION INSTALLATION

A. Coordinate installing roofing system components so insulation is not exposed to precipitation or left exposed at end of workday.

B. Comply with roofing system and insulation manufacturer's written instructions for installing roof insulation.

C. Installation Over Concrete Decks:

1. Install base layer of insulation with joints staggered not less than 24 inches in adjacent rows .
   a. Trim insulation neatly to fit around penetrations and projections, and to fit tight to intersecting sloping roof decks.
   b. Make joints between adjacent insulation boards not more than 1/4 inch in width.
   c. At internal roof drains, slope insulation to create a square drain sump with each side equal to the diameter of the drain bowl plus 24 inches.
      1) Trim insulation so that water flow is unrestricted.
   d. Fill gaps exceeding 1/4 inch with insulation.
   e. Cut and fit insulation within 1/4 inch of nailers, projections, and penetrations.
   f. Adhere base layer of insulation to concrete roof deck according to FM Approvals' RoofNav assembly requirements and FM Global Property Loss Prevention Data Sheet 1-29 for specified Windstorm Resistance Classification, as follows:
      1) Prime surface of concrete deck with asphalt primer at rate of 3/4 gal./100 sq. ft., and allow primer to dry.
      2) Set insulation in ribbons of bead-applied insulation adhesive, firmly pressing and maintaining insulation in place.
      3) Set insulation in a uniform coverage of full-spread insulation adhesive, firmly pressing and maintaining insulation in place.
2. Install upper layers of insulation and tapered insulation with joints of each layer offset not less than 12 inches from previous layer of insulation.
   a. Staggered end joints within each layer not less than 24 inches in adjacent rows.
   b. Install with long joints continuous and with end joints staggered not less than 12 inches in adjacent rows.

Copyright © 2025 by the American Institute of Architects. Warning: This AIA MasterSpec-based document is protected by U.S. Copyright Law and International Treaties. It was created by "Michael Shilale Architects, LLP" for "Renovation of Rockland Green Administrative Headquarters and Construction of an Immersive Theatre Experience". A valid, current MasterSpec license is required for editing and use of this document for any other project.(22360)

c. Trim insulation neatly to fit around penetrations and projections, and to fit tight to intersecting sloping roof decks.
d. Make joints between adjacent insulation boards not more than 1/4 inch in width.
e. At internal roof drains, slope insulation to create a square drain sump with each side equal to the diameter of the drain bowl plus 24 inches.
   1) Trim insulation so that water is unrestricted.
f. Fill gaps exceeding 1/4 inch with insulation.
g. Cut and fit insulation within 1/4 inch of nailers, projections, and penetrations.
h. Adhere each layer of insulation to substrate using adhesive according to FM Approvals' RoofNav assembly requirements and FM Global Property Loss Prevention Data Sheet 1-29 for specified Windstorm Resistance Classification, as follows:
   1) Set each layer of insulation in ribbons of bead-applied insulation adhesive, firmly pressing and maintaining insulation in place.
   2) Set each layer of insulation in a uniform coverage of full-spread insulation adhesive, firmly pressing and maintaining insulation in place.

3.6 INSTALLATION OF COVER BOARDS

A. Install cover boards over insulation with long joints in continuous straight lines with end joints staggered between rows. Offset joints of insulation below a minimum of 6 inches in each direction.

1. Trim cover board neatly to fit around penetrations and projections, and to fit tight to intersecting sloping roof decks.
2. At internal roof drains, conform to slope of drain sump.
   a. Trim cover board so that water flow is unrestricted.
3. Cut and fit cover board tight to nailers, projections, and penetrations.
4. Adhere cover board to substrate using adhesive according to FM Approvals' RoofNav assembly requirements and FM Global Property Loss Prevention Data Sheet 1-29 for specified Windstorm Resistance Classification, as follows:
   a. Set cover board in ribbons of bead-applied insulation adhesive, firmly pressing and maintaining insulation in place.
   b. Set cover board in a uniform coverage of full-spread insulation adhesive, firmly pressing and maintaining insulation in place.

B. Install slip sheet over cover board and immediately beneath roofing.

3.7 ADHERED ROOFING INSTALLATION

A. Adhere roof membrane over area to receive roofing according to roofing system manufacturer's written instructions.

B. Unroll membrane roof membrane and allow to relax before installing.

C. Start installation of roofing in presence of roofing system manufacturer's technical personnel and Owner's testing and inspection agency.

Copyright © 2025 by the American Institute of Architects. Warning: This AIA MasterSpec-based document is protected by U.S. Copyright Law and International Treaties. It was created by "Michael Shilale Architects, LLP" for "Renovation of Rockland Green Administrative Headquarters and Construction of an Immersive Theatre Experience". A valid, current MasterSpec license is required for editing and use of this document for any other project.(22360)

D. Accurately align roof membrane, and maintain uniform side and end laps of minimum dimensions required by manufacturer. Stagger end laps.

E. Bonding Adhesive: Apply to substrate and underside of roof membrane at rate required by manufacturer, and allow to partially dry before installing roof membrane. Do not apply to splice area of roof membrane.

F. In addition to adhering, mechanically fasten roof membrane securely at terminations, penetrations, and perimeters.

G. Apply roof membrane with side laps shingled with slope of roof deck where possible.

H. Adhesive Seam Installation: Clean both faces of splice areas, apply splicing cement.

1. Firmly roll side and end laps of overlapping roof membrane to ensure a watertight seam installation.
2. Apply lap sealant and seal exposed edges of roofing terminations.
3. Apply a continuous bead of in-seam sealant before closing splice if required by roofing system manufacturer.

I. Tape Seam Installation: Clean and prime both faces of splice areas, apply splice tape.

1. Firmly roll side and end laps of overlapping roof membrane to ensure a watertight seam installation.
2. Apply lap sealant and seal exposed edges of roofing terminations.

J. Factory-Applied Seam Tape Installation: Clean and prime surface to receive tape.

1. Firmly roll side and end laps of overlapping roof membrane to ensure a watertight seam installation.
2. Apply lap sealant and seal exposed edges of roofing terminations.

K. Repair tears, voids, and lapped seams in roof membrane that do not comply with requirements.

L. Spread sealant or mastic bed over deck-drain flange at roof drains, and securely seal roof membrane in place with clamping ring.

M. Adhere protection sheet over roof membrane at locations indicated.

3.8 BASE FLASHING INSTALLATION

A. Install sheet flashings and preformed flashing accessories, and adhere to substrates according to roofing system manufacturer's written instructions.

B. Apply bonding adhesive to substrate and underside of sheet flashing at required rate, and allow to partially dry. Do not apply to seam area of flashing.

C. Flash penetrations and field-formed inside and outside corners with cured or uncured sheet flashing.

Copyright © 2025 by the American Institute of Architects. Warning: This AIA MasterSpec-based document is protected by U.S. Copyright Law and International Treaties. It was created by "Michael Shilale Architects, LLP" for "Renovation of Rockland Green Administrative Headquarters and Construction of an Immersive Theatre Experience". A valid, current MasterSpec license is required for editing and use of this document for any other project.(22360)

D. Clean splice areas, apply splicing cement, and firmly roll side and end laps of overlapping sheets to ensure a watertight seam installation. Apply lap sealant and seal exposed edges of sheet flashing terminations.

E. Terminate and seal top of sheet flashings and mechanically anchor to substrate through termination bars.

3.9 WALKWAY INSTALLATION

A. Flexible Walkways: Install walkway products according to manufacturer's written instructions.

1. Install flexible walkways at the following locations:
   a. Perimeter of each rooftop unit.
   b. Between each rooftop unit location, creating a continuous path connecting rooftop unit locations.
   c. Between each roof hatch and each rooftop unit location or path connecting rooftop unit locations.
   d. Top and bottom of each roof access ladder.
   e. Between each roof access ladder and each rooftop unit location or path connecting rooftop unit locations.
   f. Locations indicated on Drawings.
   g. As required by roof membrane manufacturer's warranty requirements.
2. Provide 6-inch clearance between adjoining pads.
3. Adhere walkway products to substrate with compatible adhesive according to roofing system manufacturer's written instructions.

3.10 FIELD QUALITY CONTROL

A. Testing Agency: Owner will engage a qualified testing agency to inspect substrate conditions, surface preparation, roof membrane application, sheet flashings, protection, and drainage components, and to furnish reports to Architect.

B. Owner will engage a qualified testing agency to perform the following tests:

1. Flood Testing: Flood test each roofing area for leaks, according to recommendations in ASTM D 5957, after completing roofing and flashing. Install temporary containment assemblies, plug or dam drains, and flood with potable water.
   a. Perform tests before overlying construction is placed.
   b. Flood to an average depth of 2-1/2 inches with a minimum depth of 1 inch and not exceeding a depth of 4 inches . Maintain 2 inches of clearance from top of base flashing.
   c. Flood each area for 48 hours.
   d. After flood testing, repair leaks, repeat flood tests, and make further repairs until roofing and flashing installations are watertight.
      1) Cost of retesting is Contractor's responsibility.
   e. Testing agency shall prepare survey report indicating locations initial leaks, if any, and final survey report.

Copyright © 2025 by the American Institute of Architects. Warning: This AIA MasterSpec-based document is protected by U.S. Copyright Law and International Treaties. It was created by "Michael Shilale Architects, LLP" for "Renovation of Rockland Green Administrative Headquarters and Construction of an Immersive Theatre Experience". A valid, current MasterSpec license is required for editing and use of this document for any other project.(22360)

2. Testing agency shall prepare survey report indicating locations of initial discontinuities, if any.

C. Final Roof Inspection: Arrange for roofing system manufacturer's technical personnel to inspect roofing installation on completion, in presence of Architect, and to prepare inspection report.

D. Repair or remove and replace components of roofing system where inspections indicate that they do not comply with specified requirements.

E. Additional testing and inspecting, at Contractor's expense, will be performed to determine if replaced or additional work complies with specified requirements.

3.11 PROTECTING AND CLEANING

A. Protect roofing system from damage and wear during remainder of construction period. When remaining construction does not affect or endanger roofing system, inspect roofing system for deterioration and damage, describing its nature and extent in a written report, with copies to Architect and Owner.

B. Correct deficiencies in or remove roofing system that does not comply with requirements, repair substrates, and repair or reinstall roofing system to a condition free of damage and deterioration at time of Substantial Completion and according to warranty requirements.

C. Clean overspray and spillage from adjacent construction using cleaning agents and procedures recommended by manufacturer of affected construction.

3.12 ROOFING INSTALLER'S WARRANTY

A. WHEREAS _____ of _____, herein called the "Roofing Installer," has performed roofing and associated work ("work") on the following project:

1. Owner: <**Insert name of Owner>**.
2. Address: <**Insert address>**.
3. Building Name/Type: <**Insert information>**.
4. Address: <**Insert address>**.
5. Area of Work: <**Insert information>**.
6. Acceptance Date: _____.
7. Warranty Period: <**Insert time>**.
8. Expiration Date: _____.

B. AND WHEREAS Roofing Installer has contracted (either directly with Owner or indirectly as a subcontractor) to warrant said work against leaks and faulty or defective materials and workmanship for designated Warranty Period,

C. NOW THEREFORE Roofing Installer hereby warrants, subject to terms and conditions herein set forth, that during Warranty Period Roofing Installer will, at Roofing Installer's own cost and expense, make or cause to be made such repairs to or replacements of said work as are

Copyright © 2025 by the American Institute of Architects. Warning: This AIA MasterSpec-based document is protected by U.S. Copyright Law and International Treaties. It was created by "Michael Shilale Architects, LLP" for "Renovation of Rockland Green Administrative Headquarters and Construction of an Immersive Theatre Experience". A valid, current MasterSpec license is required for editing and use of this document for any other project.(22360)

necessary to correct faulty and defective work and as are necessary to maintain said work in a watertight condition.

D. This Warranty is made subject to the following terms and conditions:

1. Specifically excluded from this Warranty are damages to work and other parts of the building, and to building contents, caused by:
   a. lightning;
   b. peak gust wind speed exceeding 72 mph ;
   c. fire;
   d. failure of roofing system substrate, including cracking, settlement, excessive deflection, deterioration, and decomposition;
   e. faulty construction of parapet walls, copings, chimneys, skylights, vents, equipment supports, and other edge conditions and penetrations of the work;
   f. vapor condensation on bottom of roofing; and
   g. activity on roofing by others, including construction contractors, maintenance personnel, other persons, and animals, whether authorized or unauthorized by Owner.
2. When work has been damaged by any of foregoing causes, Warranty shall be null and void until such damage has been repaired by Roofing Installer and until cost and expense thereof have been paid by Owner or by another responsible party so designated.
3. Roofing Installer is responsible for damage to work covered by this Warranty but is not liable for consequential damages to building or building contents resulting from leaks or faults or defects of work.
4. During Warranty Period, if Owner allows alteration of work by anyone other than Roofing Installer, including cutting, patching, and maintenance in connection with penetrations, attachment of other work, and positioning of anything on roof, this Warranty shall become null and void on date of said alterations, but only to the extent said alterations affect work covered by this Warranty. If Owner engages Roofing Installer to perform said alterations, Warranty shall not become null and void unless Roofing Installer, before starting said work, shall have notified Owner in writing, showing reasonable cause for claim, that said alterations would likely damage or deteriorate work, thereby reasonably justifying a limitation or termination of this Warranty.
5. During Warranty Period, if original use of roof is changed and it becomes used for, but was not originally specified for, a promenade, work deck, spray-cooled surface, flooded basin, or other use or service more severe than originally specified, this Warranty shall become null and void on date of said change, but only to the extent said change affects work covered by this Warranty.
6. Owner shall promptly notify Roofing Installer of observed, known, or suspected leaks, defects, or deterioration and shall afford reasonable opportunity for Roofing Installer to inspect work and to examine evidence of such leaks, defects, or deterioration.
7. This Warranty is recognized to be the only warranty of Roofing Installer on said work and shall not operate to restrict or cut off Owner from other remedies and resources lawfully available to Owner in cases of roofing failure. Specifically, this Warranty shall not operate to relieve Roofing Installer of responsibility for performance of original work according to requirements of the Contract Documents, regardless of whether Contract was a contract directly with Owner or a subcontract with Owner's General Contractor.

E. IN WITNESS THEREOF, this instrument has been duly executed this _____ day of _____, _____.

Copyright © 2025 by the American Institute of Architects. Warning: This AIA MasterSpec-based document is protected by U.S. Copyright Law and International Treaties. It was created by "Michael Shilale Architects, LLP" for "Renovation of Rockland Green Administrative Headquarters and Construction of an Immersive Theatre Experience". A valid, current MasterSpec license is required for editing and use of this document for any other project.(22360)

1. Authorized Signature: _____.
2. Name: _____.
3. Title: _____.

END OF SECTION 075323

Copyright © 2025 by the American Institute of Architects. Warning: This AIA MasterSpec-based document is protected by U.S. Copyright Law and International Treaties. It was created by "Michael Shilale Architects, LLP" for "Renovation of Rockland Green Administrative Headquarters and Construction of an Immersive Theatre Experience". A valid, current MasterSpec license is required for editing and use of this document for any other project.(22360)

SECTION 076200 - SHEET METAL FLASHING AND TRIM

PART 1 - GENERAL

1.1 RELATED DOCUMENTS

A. Drawings and general provisions of the Contract, including General and Supplementary Conditions and Division 01 Specification Sections, apply to this Section.

1.2 SUMMARY

A. Section Includes:

1. Manufactured through-wall flashing with counterflashing.
2. Formed wall sheet metal fabrications.
3. Formed equipment support flashing.

B. Related Requirements:

1. Section 061053 "Miscellaneous Rough Carpentry" for wood nailers, curbs, and blocking.
2. Section 077200 "Roof Accessories" for set-on-type curbs, equipment supports, roof hatches, vents, and other manufactured roof accessory units.

1.3 COORDINATION

A. Coordinate sheet metal flashing and trim layout and seams with sizes and locations of penetrations to be flashed, and joints and seams in adjacent materials.

B. Coordinate sheet metal flashing and trim installation with adjoining roofing and wall materials, joints, and seams to provide leakproof, secure, and noncorrosive installation.

1.4 PREINSTALLATION MEETINGS

A. Preinstallation Conference: Conduct conference at Project site .

1. Review construction schedule. Verify availability of materials, Installer's personnel, equipment, and facilities needed to make progress and avoid delays.
2. Review special roof details, roof drainage, roof-penetration flashing, equipment curbs, and condition of other construction that affect sheet metal flashing and trim.
3. Review requirements for insurance and certificates if applicable.
4. Review sheet metal flashing observation and repair procedures after flashing installation.

Copyright © 2025 by the American Institute of Architects. Warning: This AIA MasterSpec-based document is protected by U.S. Copyright Law and International Treaties. It was created by "Michael Shilale Architects, LLP" for "Renovation of Rockland Green Administrative Headquarters and Construction of an Immersive Theatre Experience". A valid, current MasterSpec license is required for editing and use of this document for any other project.(22360)

1.5 ACTION SUBMITTALS

A. Product Data: For each type of product.

1. Include construction details, material descriptions, dimensions of individual components and profiles, and finishes for each manufactured product and accessory.

B. Samples for Initial Selection: For each type of sheet metal and accessory indicated with factory-applied finishes.

C. Samples for Verification: For each type of exposed finish.

1. Sheet Metal Flashing: 12 inches long by actual width of unit, including finished seam and in required profile. Include fasteners, cleats, clips, closures, and other attachments.
2. Trim, Metal Closures, Expansion Joints, Joint Intersections, and Miscellaneous Fabrications: 12 inches long and in required profile. Include fasteners and other exposed accessories.
3. Unit-Type Accessories and Miscellaneous Materials: Full-size Sample.
4. Anodized Aluminum Samples: Samples to show full range to be expected for each color required.

1.6 INFORMATIONAL SUBMITTALS

A. Qualification Data: For fabricator.

B. Product Certificates: For each type of coping and roof edge flashing that is FM Approvals approved.

C. Product Test Reports: For each product, for tests performed by a qualified testing agency.

D. Sample Warranty: For special warranty.

1.7 CLOSEOUT SUBMITTALS

A. Maintenance Data: For sheet metal flashing and trim, and its accessories, to include in maintenance manuals.

1.8 QUALITY ASSURANCE

A. Fabricator Qualifications: Employs skilled workers who custom fabricate sheet metal flashing and trim similar to that required for this Project and whose products have a record of successful in-service performance.

1. For copings and roof edge flashings that are FM Approvals approved, shop shall be listed as able to fabricate required details as tested and approved.

Copyright © 2025 by the American Institute of Architects. Warning: This AIA MasterSpec-based document is protected by U.S. Copyright Law and International Treaties. It was created by "Michael Shilale Architects, LLP" for "Renovation of Rockland Green Administrative Headquarters and Construction of an Immersive Theatre Experience". A valid, current MasterSpec license is required for editing and use of this document for any other project.(22360)

B. Mockups: Build mockups to verify selections made under Sample submittals, to demonstrate aesthetic effects, and to set quality standards for fabrication and installation.

1. Build mockup of typical roof edge , including fascia apron flashing , approximately 10 feet long, including supporting construction cleats, seams, attachments and accessories.
2. Build mockup of thru wall scupper, complete installation and obtain Owner/Arch approval.
3. Approval of mockups does not constitute approval of deviations from the Contract Documents contained in mockups unless Architect specifically approves such deviations in writing.
4. Subject to compliance with requirements, approved mockups may become part of the completed Work if undisturbed at time of Substantial Completion.

1.9 DELIVERY, STORAGE, AND HANDLING

A. Do not store sheet metal flashing and trim materials in contact with other materials that might cause staining, denting, or other surface damage. Store sheet metal flashing and trim materials away from uncured concrete and masonry.

B. Protect strippable protective covering on sheet metal flashing and trim from exposure to sunlight and high humidity, except to extent necessary for period of sheet metal flashing and trim installation.

1.10 WARRANTY

A. Special Warranty on Finishes: Manufacturer agrees to repair finish or replace sheet metal flashing and trim that shows evidence of deterioration of factory-applied finishes within specified warranty period.

1. Exposed Panel Finish: Deterioration includes, but is not limited to, the following:
   a. Color fading more than 5 Hunter units when tested according to ASTM D 2244.
   b. Chalking in excess of a No. 8 rating when tested according to ASTM D 4214.
   c. Cracking, checking, peeling, or failure of paint to adhere to bare metal.
2. Finish Warranty Period: 20 years from date of Substantial Completion.

PART 2 - PRODUCTS

2.1 PERFORMANCE REQUIREMENTS

A. General: Sheet metal flashing and trim assemblies shall withstand wind loads, structural movement, thermally induced movement, and exposure to weather without failure due to defective manufacture, fabrication, installation, or other defects in construction. Completed sheet metal flashing and trim shall not rattle, leak, or loosen, and shall remain watertight.

Copyright © 2025 by the American Institute of Architects. Warning: This AIA MasterSpec-based document is protected by U.S. Copyright Law and International Treaties. It was created by "Michael Shilale Architects, LLP" for "Renovation of Rockland Green Administrative Headquarters and Construction of an Immersive Theatre Experience". A valid, current MasterSpec license is required for editing and use of this document for any other project.(22360)

B. Sheet Metal Standard for Flashing and Trim: Comply with NRCA's "The NRCA Roofing Manual" and SMACNA's "Architectural Sheet Metal Manual" requirements for dimensions and profiles shown unless more stringent requirements are indicated.

C. Sheet Metal Standard for Copper: Comply with CDA's "Copper in Architecture Handbook." Conform to dimensions and profiles shown unless more stringent requirements are indicated.

D. FM Approvals Listing: Manufacture and install copings that are listed in FM Approvals' "RoofNav" and approved for windstorm classification, Class 1-120 . Identify materials with name of fabricator and design approved by FM Approvals.

E. Thermal Movements: Allow for thermal movements from ambient and surface temperature changes to prevent buckling, opening of joints, overstressing of components, failure of joint sealants, failure of connections, and other detrimental effects. Base calculations on surface temperatures of materials due to both solar heat gain and nighttime-sky heat loss.

1. Temperature Change: 120 deg F , ambient; 180 deg F , material surfaces .

2.2 SHEET METALS

A. General: Protect mechanical and other finishes on exposed surfaces from damage by applying strippable, temporary protective film before shipping.

B. Copper Sheet: ASTM B 370, cold-rolled copper sheet, H00 or H01 temper.

1. Nonpatinated Exposed Finish: Mill.

C. Aluminum Sheet: ASTM B 209, alloy as standard with manufacturer for finish required, with temper as required to suit forming operations and performance required; with smooth, flat surface.

1. As-Milled Finish: Mill .
2. Color: As selected by Architect from manufacturer's full range .
3. Concealed Finish: Pretreat with manufacturer's standard white or light-colored acrylic or polyester backer finish, consisting of prime coat and wash coat with minimum total dry film thickness of 0.5 mil.

D. Stainless-Steel Sheet: ASTM A 240/A 240M , Type 304 , dead soft, fully annealed; with smooth, flat surface.

1. Finish: Brushed. .

E. Zinc-Tin Alloy-Coated Stainless-Steel Sheet: ASTM A 240/A 240M, Type 304, dead-soft, fully annealed, stainless-steel sheet of minimum uncoated thickness indicated; coated on both sides with zinc-tin alloy (50 percent zinc, 50 percent tin), with factory-applied gray preweathering.

F. Zinc-Tin Alloy-Coated Copper Sheet: ASTM B 370, cold-rolled copper sheet, H00 temper, of minimum uncoated weight (thickness) indicated; coated on both sides with zinc-tin alloy (50 percent zinc, 50 percent tin).

Copyright © 2025 by the American Institute of Architects. Warning: This AIA MasterSpec-based document is protected by U.S. Copyright Law and International Treaties. It was created by "Michael Shilale Architects, LLP" for "Renovation of Rockland Green Administrative Headquarters and Construction of an Immersive Theatre Experience". A valid, current MasterSpec license is required for editing and use of this document for any other project.(22360)

G. Metallic-Coated Steel Sheet: Provide zinc-coated (galvanized) steel sheet according to ASTM A 653/A 653M, G90 coating designation or aluminum-zinc alloy-coated steel sheet according to ASTM A 792/A 792M, Class AZ50 coating designation, Grade 40; prepainted by coil-coating process to comply with ASTM A 755/A 755M.

1. Surface: Smooth, flat and mill phosphatized for field painting .
2. Exposed Coil-Coated Finish:
   a. Three-Coat Fluoropolymer: AAMA 621. Fluoropolymer finish containing not less than 70 percent PVDF resin by weight in both color coat and clear topcoat. Prepare, pretreat, and apply coating to exposed metal surfaces to comply with coating and resin manufacturers' written instructions.
3. Color: As selected by Architect from manufacturer's full range .
4. Concealed Finish: Pretreat with manufacturer's standard white or light-colored acrylic or polyester backer finish, consisting of prime coat and wash coat with minimum total dry film thickness of 0.5 mil.

H. Zinc Sheet: 99.995 percent electrolytic high-grade zinc with alloy additives of copper (0.08 to 0.20 percent), titanium (0.07 to 0.12 percent), and aluminum (0.015 percent) ; with manufacturer's standard factory-applied, flexible, protective back coating.

1. Finish: Preweathered gray .

I. Copper-Clad Stainless-Steel Sheet: ASTM B 506, annealed Temper O61.

1. Nonpatinated Exposed Finish: Mill.

2.3 UNDERLAYMENT MATERIALS

A. Synthetic Underlayment: Laminated or reinforced, woven polyethylene or polypropylene, synthetic roofing underlayment; bitumen free; slip resistant; suitable for high temperatures over 220 deg F; and complying with physical requirements of ASTM D 226/D 226M for Type I and Type II felts.

B. Slip Sheet: Rosin-sized building paper, 3 lb/100 sq. ft.minimum.

2.4 MISCELLANEOUS MATERIALS

A. General: Provide materials and types of fasteners , solder, protective coatings, sealants, and other miscellaneous items as required for complete sheet metal flashing and trim installation and as recommended by manufacturer of primary sheet metal or manufactured item unless otherwise indicated.

B. Fasteners: Wood screws, annular threaded nails, self-tapping screws, self-locking rivets and bolts, and other suitable fasteners designed to withstand design loads and recommended by manufacturer of primary sheet metal or manufactured item.

1. General: Blind fasteners or self-drilling screws, gasketed, with hex-washer head.

Copyright © 2025 by the American Institute of Architects. Warning: This AIA MasterSpec-based document is protected by U.S. Copyright Law and International Treaties. It was created by "Michael Shilale Architects, LLP" for "Renovation of Rockland Green Administrative Headquarters and Construction of an Immersive Theatre Experience". A valid, current MasterSpec license is required for editing and use of this document for any other project.(22360)

a. Exposed Fasteners: Heads matching color of sheet metal using plastic caps or factory-applied coating. Provide metal-backed EPDM or PVC sealing washers under heads of exposed fasteners bearing on weather side of metal.
b. Blind Fasteners: High-strength aluminum or stainless-steel rivets suitable for metal being fastened.
c. Spikes and Ferrules: Same material as gutter; with spike with ferrule matching internal gutter width.

2. Fasteners for Zinc-Tin Alloy-Coated Copper Sheet: Copper, hardware bronze or passivated Series 300 stainless steel.
3. Fasteners for Aluminum Sheet: Aluminum or Series 300 stainless steel.
4. Fasteners for Stainless-Steel Sheet: Series 300 stainless steel.
5. Fasteners for Zinc-Tin Alloy-Coated Stainless-Steel Sheet: Series 300 stainless steel.
6. Fasteners for Zinc-Coated (Galvanized) Steel Sheet: Series 300 stainless steel or hot-dip galvanized steel according to ASTM A 153/A 153M or ASTM F 2329.
7. Fasteners for Zinc Sheet: Series 300 stainless steel or hot-dip galvanized steel according to ASTM A 153/A 153M or ASTM F 2329.

C. Solder:

1. For Copper : ASTM B 32, Grade Sn50, 50 percent tin and 50 percent lead with maximum lead content of 0.2 percent.
2. For Stainless Steel: ASTM B 32, Grade Sn60 , with acid flux of type recommended by stainless-steel sheet manufacturer.
3. For Zinc-Tin Alloy-Coated Stainless Steel : ASTM B 32, 100 percent tin, with maximum lead content of 0.2 percent, as recommended by sheet metal manufacturer.
4. For Zinc-Coated (Galvanized) Steel: ASTM B 32, Grade Sn50, 50 percent tin and 50 percent lead or Grade Sn60, 60 percent tin and 40 percent lead .
5. For Zinc: ASTM B 32, 40 percent tin and 60 percent lead with low antimony, as recommended by zinc manufacturer.

D. Sealant Tape: Pressure-sensitive, 100 percent solids, polyisobutylene compound sealant tape with release-paper backing. Provide permanently elastic, nonsag, nontoxic, nonstaining tape 1/2 inch wide and 1/8 inch thick.

E. Elastomeric Sealant: ASTM C 920, elastomeric polyurethane polymer sealant; of type, grade, class, and use classifications required to seal joints in sheet metal flashing and trim and remain watertight.

F. Butyl Sealant: ASTM C 1311, single-component, solvent-release butyl rubber sealant; polyisobutylene plasticized; heavy bodied for hooked-type expansion joints with limited movement.

G. Epoxy Seam Sealer: Two-part, noncorrosive, aluminum seam-cementing compound, recommended by aluminum manufacturer for exterior nonmoving joints, including riveted joints.

H. Bituminous Coating: Cold-applied asphalt emulsion according to ASTM D 1187.

I. Asphalt Roofing Cement: ASTM D 4586, asbestos free, of consistency required for application.

Copyright © 2025 by the American Institute of Architects. Warning: This AIA MasterSpec-based document is protected by U.S. Copyright Law and International Treaties. It was created by "Michael Shilale Architects, LLP" for "Renovation of Rockland Green Administrative Headquarters and Construction of an Immersive Theatre Experience". A valid, current MasterSpec license is required for editing and use of this document for any other project.(22360)

2.5 MANUFACTURED SHEET METAL FLASHING AND TRIM

A. Through-Wall, Ribbed, Sheet Metal Flashing: Manufacture through-wall sheet metal flashing for embedment in masonry, with ribs at 3-inch intervals along length of flashing to provide integral mortar bond. Manufacture through-wall flashing with interlocking counterflashing on exterior face, of same metal as flashing.

1. Copper: 10-oz. minimum for fully concealed flashing; 16 oz. elsewhere.
2. Stainless Steel: 0.016 inch thick.

2.6 FABRICATION, GENERAL

A. General: Custom fabricate sheet metal flashing and trim to comply with details shown and recommendations in cited sheet metal standard that apply to design, dimensions, geometry, metal thickness, and other characteristics of item required. Fabricate sheet metal flashing and trim in shop to greatest extent possible.

1. Fabricate sheet metal flashing and trim in thickness or weight needed to comply with performance requirements, but not less than that specified for each application and metal.
2. Obtain field measurements for accurate fit before shop fabrication.
3. Form sheet metal flashing and trim to fit substrates without excessive oil canning, buckling, and tool marks; true to line, levels, and slopes; and with exposed edges folded back to form hems.
4. Conceal fasteners and expansion provisions where possible. Do not use exposed fasteners on faces exposed to view.

B. Fabrication Tolerances: Fabricate sheet metal flashing and trim that is capable of installation to a tolerance of 1/4 inch in 20 feet on slope and location lines indicated on Drawings and within 1/8-inch offset of adjoining faces and of alignment of matching profiles.

C. Fabrication Tolerances: Fabricate sheet metal flashing and trim that is capable of installation to tolerances specified in MCA's "Guide Specification for Residential Metal Roofing."

D. Expansion Provisions: Form metal for thermal expansion of exposed flashing and trim.

1. Form expansion joints of intermeshing hooked flanges, not less than 1 inch deep, filled with butyl sealant concealed within joints.
2. Use lapped expansion joints only where indicated on Drawings.

E. Sealant Joints: Where movable, nonexpansion-type joints are required, form metal to provide for proper installation of elastomeric sealant according to cited sheet metal standard.

F. Fabricate cleats and attachment devices from same material as accessory being anchored or from compatible, noncorrosive metal.

G. Fabricate cleats and attachment devices of sizes as recommended by cited sheet metal standard and by FM Global Property Loss Prevention Data Sheet 1-49 for application, but not less than thickness of metal being secured.

Copyright © 2025 by the American Institute of Architects. Warning: This AIA MasterSpec-based document is protected by U.S. Copyright Law and International Treaties. It was created by "Michael Shilale Architects, LLP" for "Renovation of Rockland Green Administrative Headquarters and Construction of an Immersive Theatre Experience". A valid, current MasterSpec license is required for editing and use of this document for any other project.(22360)

H. Seams: Fabricate nonmoving seams with flat-lock seams. Tin edges to be seamed, form seams, and solder.

I. Seams: Fabricate nonmoving seams with flat-lock seams. Form seams and seal with elastomeric sealant unless otherwise recommended by sealant manufacturer for intended use. Rivet joints where necessary for strength.

J. Seams for Aluminum: Fabricate nonmoving seams with flat-lock seams. Form seams and seal with epoxy seam sealer. Rivet joints where necessary for strength.

K. Do not use graphite pencils to mark metal surfaces.

2.7 WALL SHEET METAL FABRICATIONS

A. Thru-Wall Scupper.

1. Stainless Steel:0.125 inch thick.
2. Stainless-Steel Sheet: ASTM A 240/A 240M, Type 304, dead soft, fully annealed; with smooth, flat surface.1.Finish: Brushed..

2.8 MISCELLANEOUS SHEET METAL FABRICATIONS

A. Equipment Support Flashing: Fabricate from the following materials:

1. Stainless Steel: 0.019 inch thick.
2. Zinc-Tin Alloy-Coated Copper: 16 oz./sq. ft. .
3. Aluminum-Zinc Alloy-Coated Steel: 0.028 inch thick.

PART 3 - EXECUTION

3.1 EXAMINATION

A. Examine substrates, areas, and conditions, with Installer present, for compliance with requirements for installation tolerances, substrate, and other conditions affecting performance of the Work.

1. Verify compliance with requirements for installation tolerances of substrates.
2. Verify that substrate is sound, dry, smooth, clean, sloped for drainage, and securely anchored.
3. Verify that air- or water-resistant barriers have been installed over sheathing or backing substrate to prevent air infiltration or water penetration.

B. Proceed with installation only after unsatisfactory conditions have been corrected.

Copyright © 2025 by the American Institute of Architects. Warning: This AIA MasterSpec-based document is protected by U.S. Copyright Law and International Treaties. It was created by "Michael Shilale Architects, LLP" for "Renovation of Rockland Green Administrative Headquarters and Construction of an Immersive Theatre Experience". A valid, current MasterSpec license is required for editing and use of this document for any other project.(22360)

3.2 UNDERLAYMENT INSTALLATION

A. Synthetic Underlayment: Install synthetic underlayment, wrinkle free, according to manufacturers' written instructions, and using adhesive where possible to minimize use of mechanical fasteners under sheet metal.

B. Apply slip sheet, wrinkle free, directly on substrate before installing sheet metal flashing and trim.

3.3 INSTALLATION, GENERAL

A. General: Anchor sheet metal flashing and trim and other components of the Work securely in place, with provisions for thermal and structural movement. Use fasteners , solder, protective coatings, separators, sealants, and other miscellaneous items as required to complete sheet metal flashing and trim system.

1. Install sheet metal flashing and trim true to line, levels, and slopes. Provide uniform, neat seams with minimum exposure of solder, welds, and sealant.
2. Install sheet metal flashing and trim to fit substrates and to result in watertight performance. Verify shapes and dimensions of surfaces to be covered before fabricating sheet metal.
3. Space cleats not more than 12 inches apart. Attach each cleat with at least two fasteners. Bend tabs over fasteners.
4. Install exposed sheet metal flashing and trim with limited oil canning, and free of buckling and tool marks.
5. Torch cutting of sheet metal flashing and trim is not permitted.
6. Do not use graphite pencils to mark metal surfaces.

B. Metal Protection: Where dissimilar metals contact each other, or where metal contacts pressure-treated wood or other corrosive substrates, protect against galvanic action or corrosion by painting contact surfaces with bituminous coating or by other permanent separation as recommended by sheet metal manufacturer or cited sheet metal standard.

1. Coat concealed side of uncoated-aluminum and stainless-steel sheet metal flashing and trim with bituminous coating where flashing and trim contact wood, ferrous metal, or cementitious construction.
2. Underlayment: Where installing sheet metal flashing and trim directly on cementitious or wood substrates, install underlayment and cover with slip sheet.

C. Expansion Provisions: Provide for thermal expansion of exposed flashing and trim. Space movement joints at maximum of 10 feet with no joints within 24 inches of corner or intersection.

1. Form expansion joints of intermeshing hooked flanges, not less than 1 inch deep, filled with sealant concealed within joints.
2. Use lapped expansion joints only where indicated on Drawings.

D. Fasteners: Use fastener sizes that penetrate wood blocking or sheathing not less than 1-1/4 inches for nails and not less than 3/4 inch for wood screws .

Copyright © 2025 by the American Institute of Architects. Warning: This AIA MasterSpec-based document is protected by U.S. Copyright Law and International Treaties. It was created by "Michael Shilale Architects, LLP" for "Renovation of Rockland Green Administrative Headquarters and Construction of an Immersive Theatre Experience". A valid, current MasterSpec license is required for editing and use of this document for any other project.(22360)

E. Conceal fasteners and expansion provisions where possible in exposed work and locate to minimize possibility of leakage. Cover and seal fasteners and anchors as required for a tight installation.

F. Seal joints as required for watertight construction.

1. Use sealant-filled joints unless otherwise indicated. Embed hooked flanges of joint members not less than 1 inch into sealant. Form joints to completely conceal sealant. When ambient temperature at time of installation is between 40 and 70 deg F, set joint members for 50 percent movement each way. Adjust setting proportionately for installation at higher ambient temperatures. Do not install sealant-type joints at temperatures below 40 deg F.
2. Prepare joints and apply sealants to comply with requirements in Section 079200 "Joint Sealants."

G. Soldered Joints: Clean surfaces to be soldered, removing oils and foreign matter. Pre-tin edges of sheets with solder to width of 1-1/2 inches; however, reduce pre-tinning where pre-tinned surface would show in completed Work.

1. Do not solder metallic-coated steel and aluminum sheet.
2. Do not pre-tin zinc-tin alloy-coated stainless steel and zinc-tin alloy-coated copper.
3. Do not use torches for soldering.
4. Heat surfaces to receive solder, and flow solder into joint. Fill joint completely. Completely remove flux and spatter from exposed surfaces.
5. Stainless-Steel Soldering: Tin edges of uncoated sheets, using solder for stainless steel and acid flux. Promptly remove acid flux residue from metal after tinning and soldering. Comply with solder manufacturer's recommended methods for cleaning and neutralization.
6. Copper Soldering: Tin edges of uncoated sheets, using solder for copper.
7. Copper-Clad Stainless-Steel Soldering: Tin edges of uncoated sheets, using solder for copper-clad stainless steel.

H. Rivets: Rivet joints in uncoated aluminum zinc where necessary for strength.

3.4 ROOF-DRAINAGE SYSTEM INSTALLATION

A. General: Install sheet metal roof-drainage items to produce complete roof-drainage system according to cited sheet metal standard unless otherwise indicated. Coordinate installation of roof perimeter flashing with installation of roof-drainage system.

3.5 ROOF FLASHING INSTALLATION

A. General: Install sheet metal flashing and trim to comply with performance requirements , sheet metal manufacturer's written installation instructions, and cited sheet metal standard. Provide concealed fasteners where possible, and set units true to line, levels, and slopes. Install work with laps, joints, and seams that are permanently watertight and weather resistant.

Copyright © 2025 by the American Institute of Architects. Warning: This AIA MasterSpec-based document is protected by U.S. Copyright Law and International Treaties. It was created by "Michael Shilale Architects, LLP" for "Renovation of Rockland Green Administrative Headquarters and Construction of an Immersive Theatre Experience". A valid, current MasterSpec license is required for editing and use of this document for any other project.(22360)

3.6 WALL FLASHING INSTALLATION

A. General: Install sheet metal wall flashing to intercept and exclude penetrating moisture according to cited sheet metal standard unless otherwise indicated. Coordinate installation of wall flashing with installation of wall-opening components such as windows, doors, and louvers.

3.7 MISCELLANEOUS FLASHING INSTALLATION

A. Equipment Support Flashing: Coordinate installation of equipment support flashing with installation of roofing and equipment. Weld or seal flashing with elastomeric sealant to equipment support member.

3.8 ERECTION TOLERANCES

A. Installation Tolerances: Shim and align sheet metal flashing and trim within installed tolerance of 1/4 inch in 20 feet on slope and location lines indicated on Drawings and within 1/8-inch offset of adjoining faces and of alignment of matching profiles.

B. Installation Tolerances: Shim and align sheet metal flashing and trim within installed tolerances specified in MCA's "Guide Specification for Residential Metal Roofing."

3.9 CLEANING AND PROTECTION

A. Clean exposed metal surfaces of substances that interfere with uniform oxidation and weathering.

B. Clean and neutralize flux materials. Clean off excess solder.

C. Clean off excess sealants.

D. Remove temporary protective coverings and strippable films as sheet metal flashing and trim are installed unless otherwise indicated in manufacturer's written installation instructions. On completion of sheet metal flashing and trim installation, remove unused materials and clean finished surfaces as recommended by sheet metal flashing and trim manufacturer. Maintain sheet metal flashing and trim in clean condition during construction.

E. Replace sheet metal flashing and trim that have been damaged or that have deteriorated beyond successful repair by finish touchup or similar minor repair procedures.

END OF SECTION 076200

Copyright © 2025 by the American Institute of Architects. Warning: This AIA MasterSpec-based document is protected by U.S. Copyright Law and International Treaties. It was created by "Michael Shilale Architects, LLP" for "Renovation of Rockland Green Administrative Headquarters and Construction of an Immersive Theatre Experience". A valid, current MasterSpec license is required for editing and use of this document for any other project.(22360)

SECTION 077100 - ROOF SPECIALTIES

PART 1 - GENERAL

1.1 RELATED DOCUMENTS

A. Drawings and general provisions of the Contract, including General and Supplementary Conditions and Division 01 Specification Sections, apply to this Section.

1.2 SUMMARY

A. Section Includes:

1. Copings.

B. Related Requirements:

1. Section 061053 "Miscellaneous Rough Carpentry" for wood nailers, curbs, and blocking.
2. Section 076200 "Sheet Metal Flashing and Trim" for custom- and site-fabricated sheet metal flashing and trim.
3. Section 077200 "Roof Accessories" for set-on-type curbs, equipment supports, roof hatches, vents, and other manufactured roof accessory units.
4. Section 079200 "Joint Sealants" for field-applied sealants between roof specialties and adjacent materials.

C. Preinstallation Conference: Conduct conference at Project site .

1. Meet with Owner, Architect, Owner's insurer if applicable, roofing-system testing and inspecting agency representative, roofing Installer, roofing-system manufacturer's representative, Installer, structural-support Installer, and installers whose work interfaces with or affects roof specialties, including installers of roofing materials and accessories.
2. Examine substrate conditions for compliance with requirements, including flatness and attachment to structural members.
3. Review special roof details, roof drainage, and condition of other construction that will affect roof specialties.

1.3 ACTION SUBMITTALS

A. Product Data: For each type of product.

1. Include construction details, material descriptions, dimensions of individual components and profiles, and finishes.

B. Shop Drawings: For roof specialties.

Copyright © 2025 by the American Institute of Architects. Warning: This AIA MasterSpec-based document is protected by U.S. Copyright Law and International Treaties. It was created by "Michael Shilale Architects, LLP" for "Renovation of Rockland Green Administrative Headquarters and Construction of an Immersive Theatre Experience". A valid, current MasterSpec license is required for editing and use of this document for any other project.(22360)

1. Include plans, elevations, expansion-joint locations, keyed details, and attachments to other work. Distinguish between plant- and field-assembled work.
2. Include details for expansion and contraction; locations of expansion joints, including direction of expansion and contraction.
3. Indicate profile and pattern of seams and layout of fasteners, cleats, clips, and other attachments.
4. Detail termination points and assemblies, including fixed points.
5. Include details of special conditions.

C. Samples: For each type of roof specialty and for each color and texture specified.

D. Samples for Initial Selection: For each type of roof specialty indicated with factory-applied color finishes.

E. Samples for Verification:

1. Include Samples of each type of roof specialty to verify finish and color selection, in manufacturer's standard sizes.
2. Include copings roof-edge specialties made from 12-inch lengths of full-size components in specified material, and including fasteners, cover joints, accessories, and attachments.

1.4 INFORMATIONAL SUBMITTALS

A. Qualification Data: For manufacturer.

B. Product Certificates: For each type of roof specialty.

C. Product Test Reports: For copings and roof-edge flashings, for tests performed by a qualified testing agency.

D. Sample Warranty: For manufacturer's special warranty.

1.5 CLOSEOUT SUBMITTALS

A. Maintenance Data: For roofing specialties to include in maintenance manuals.

1.6 QUALITY ASSURANCE

A. Manufacturer Qualifications: A qualified manufacturer offering products meeting requirements that are FM Approvals listed for specified class and SPRI ES-1 tested to specified design pressure.

B. Source Limitations: Obtain roof specialties approved by manufacturer providing roofing-system warranty specified in Section 075323 EPDM Roofing, .

C. Mockups: Build mockups to verify selections made under Sample submittals, to demonstrate aesthetic effects, and set quality standards for fabrication and installation.

Copyright © 2025 by the American Institute of Architects. Warning: This AIA MasterSpec-based document is protected by U.S. Copyright Law and International Treaties. It was created by "Michael Shilale Architects, LLP" for "Renovation of Rockland Green Administrative Headquarters and Construction of an Immersive Theatre Experience". A valid, current MasterSpec license is required for editing and use of this document for any other project.(22360)

1. Build mockup of typical roof edge, including fascia and , approximately 10 feet long, including supporting construction, seams, attachments, and accessories.
2. Approval of mockups does not constitute approval of deviations from the Contract Documents contained in mockups unless Architect specifically approves such deviations in writing.
3. Subject to compliance with requirements, approved mockups may become part of the completed Work if undisturbed at time of Substantial Completion.

1.7 DELIVERY, STORAGE, AND HANDLING

A. Do not store roof specialties in contact with other materials that might cause staining, denting, or other surface damage. Store roof specialties away from uncured concrete and masonry.

B. Protect strippable protective covering on roof specialties from exposure to sunlight and high humidity, except to extent necessary for the period of roof-specialty installation.

1.8 FIELD CONDITIONS

A. Field Measurements: Verify profiles and tolerances of roof-specialty substrates by field measurements before fabrication, and indicate measurements on Shop Drawings.

B. Coordination: Coordinate roof specialties with flashing, trim, and construction of parapets, roof deck, roof and wall panels, and other adjoining work to provide a leakproof, secure, and noncorrosive installation.

1.9 WARRANTY

A. Roofing-System Warranty: Roof specialties are included in warranty provisions in Section 075323 EPDM Roofing, "."

B. Special Warranty on Painted Finishes: Manufacturer agrees to repair finish or replace roof specialties that show evidence of deterioration of factory-applied finishes within specified warranty period.

1. Fluoropolymer Finish: Deterioration includes, but is not limited to, the following:
   a. Color fading more than 5 Hunter units when tested according to ASTM D 2244.
   b. Chalking in excess of a No. 8 rating when tested according to ASTM D 4214.
   c. Cracking, checking, peeling, or failure of paint to adhere to bare metal.
2. Finish Warranty Period: 20 years from date of Substantial Completion.

Copyright © 2025 by the American Institute of Architects. Warning: This AIA MasterSpec-based document is protected by U.S. Copyright Law and International Treaties. It was created by "Michael Shilale Architects, LLP" for "Renovation of Rockland Green Administrative Headquarters and Construction of an Immersive Theatre Experience". A valid, current MasterSpec license is required for editing and use of this document for any other project.(22360)

PART 2 - PRODUCTS

2.1 PERFORMANCE REQUIREMENTS

A. General Performance: Roof specialties shall withstand exposure to weather and resist thermally induced movement without failure, rattling, leaking, or fastener disengagement due to defective manufacture, fabrication, installation, or other defects in construction.

B. Thermal Movements: Allow for thermal movements from ambient and surface temperature changes to prevent buckling, opening of joints, hole elongation, overstressing of components, failure of joint sealants, failure of connections, and other detrimental effects. Provide clips that resist rotation and avoid shear stress as a result of thermal movements. Base calculations on surface temperatures of materials due to both solar heat gain and nighttime-sky heat loss.

1. Temperature Change (Range): 120 deg F , ambient; 180 deg F , material surfaces.

2.2 COPINGS

A. Metal Copings: Manufactured coping system consisting of metal coping cap in section lengths not exceeding 12 feet , concealed anchorage; with corner units, end cap units, and concealed splice plates with finish matching coping caps.

1. Formed Aluminum Sheet Coping Caps: Aluminum sheet, 0.063 inch thick .
   a. Surface: Smooth, flat finish.
   b. Finish: Two-coat fluoropolymer .
   c. Color: As selected by Architect from manufacturer's full range .
2. Corners: Factory mitered and continuously welded .
3. Special Fabrications: .
4. Coping-Cap Attachment Method: Snap-on , fabricated from coping-cap material.
   a. Snap-on Coping Anchor Plates: Concealed, galvanized-steel sheet, 12 inches wide, with integral cleats.
   b. Face-Leg Cleats: Concealed, continuous galvanized-steel sheet .

2.3 MATERIALS

A. Zinc-Coated (Galvanized) Steel Sheet: ASTM A 653/A 653M, G90 coating designation.

B. Aluminum Sheet: ASTM B 209, alloy as standard with manufacturer for finish required, with temper to suit forming operations and performance required.

C. Aluminum Extrusions: ASTM B 221, alloy and temper recommended by manufacturer for type of use and finish indicated, finished as follows:

D. Stainless-Steel Sheet: ASTM A 240/A 240M or ASTM A 666, Type 304.

E. Copper Sheet: ASTM B 370, cold-rolled copper sheet, H00 or H01 temper.

Copyright © 2025 by the American Institute of Architects. Warning: This AIA MasterSpec-based document is protected by U.S. Copyright Law and International Treaties. It was created by "Michael Shilale Architects, LLP" for "Renovation of Rockland Green Administrative Headquarters and Construction of an Immersive Theatre Experience". A valid, current MasterSpec license is required for editing and use of this document for any other project.(22360)

2.4 UNDERLAYMENT MATERIALS

A. Self-Adhering, High-Temperature Sheet: Minimum 30 to 40 mils thick, consisting of slip-resisting polyethylene-film top surface laminated to layer of butyl or SBS-modified asphalt adhesive, with release-paper backing; cold applied. Provide primer when recommended by underlayment manufacturer.

1. Thermal Stability: ASTM D 1970/D 1970M; stable after testing at 240 deg F.
2. Low-Temperature Flexibility: ASTM D 1970/D 1970M; passes after testing at minus 20 deg F.

B. Slip Sheet: Rosin-sized building paper, 3-lb/100 sq. ft. minimum.

2.5 MISCELLANEOUS MATERIALS

A. Fasteners: Manufacturer's recommended fasteners, suitable for application and designed to meet performance requirements. Furnish the following unless otherwise indicated:

1. Exposed Penetrating Fasteners: Gasketed screws with hex washer heads matching color of sheet metal.
2. Fasteners for Copper Sheet: Copper, hardware bronze, or passivated Series 300 stainless steel.
3. Fasteners for Aluminum: Aluminum or Series 300 stainless steel.
4. Fasteners for Stainless-Steel Sheet: Series 300 stainless steel.
5. Fasteners for Zinc-Coated (Galvanized) Steel Sheet: Series 300 stainless steel or hot-dip zinc-coated steel according to ASTM A 153/A 153M or ASTM F 2329.

B. Elastomeric Sealant: ASTM C 920, elastomeric polyurethane polymer sealant of type, grade, class, and use classifications required by roofing-specialty manufacturer for each application.

2.6 FINISHES

A. Comply with NAAMM's "Metal Finishes Manual for Architectural and Metal Products" for recommendations for applying and designating finishes.

B. Protect mechanical and painted finishes on exposed surfaces from damage by applying a strippable, temporary protective covering before shipping.

C. Appearance of Finished Work: Noticeable variations in same piece are unacceptable. Variations in appearance of adjoining components are acceptable if they are within the range of approved Samples and are assembled or installed to minimize contrast.

D. Coil-Coated Galvanized-Steel Sheet Finishes:

1. High-Performance Organic Finish: Prepare, pretreat, and apply coating to exposed metal surfaces to comply with ASTM A 755/A 755M and coating and resin manufacturers' written instructions.

Copyright © 2025 by the American Institute of Architects. Warning: This AIA MasterSpec-based document is protected by U.S. Copyright Law and International Treaties. It was created by "Michael Shilale Architects, LLP" for "Renovation of Rockland Green Administrative Headquarters and Construction of an Immersive Theatre Experience". A valid, current MasterSpec license is required for editing and use of this document for any other project.(22360)

a. Three-Coat Fluoropolymer: AAMA 621. Fluoropolymer finish containing not less than 70 percent PVDF resin by weight in both color coat and clear topcoat. Prepare, pretreat, and apply coating to exposed metal surfaces to comply with coating and resin manufacturers' written instructions.

E. Coil-Coated Aluminum Sheet Finishes:

1. High-Performance Organic Finish: Prepare, pretreat, and apply coating to exposed metal surfaces to comply with coating and resin manufacturers' written instructions.
   a. Three-Coat Fluoropolymer: AAMA 2605. Fluoropolymer finish containing not less than 70 percent PVDF resin by weight in both color coat and clear topcoat. Prepare, pretreat, and apply coating to exposed metal surfaces to comply with coating and resin manufacturers' written instructions.

F. Aluminum Extrusion Finishes:

1. High-Performance Organic Finish: Prepare, pretreat, and apply coating to exposed metal surfaces to comply with coating and resin manufacturers' written instructions.
   a. Three-Coat Fluoropolymer: AAMA 2604 . Fluoropolymer finish containing not less than 70 percent PVDF resin by weight in both color coat and clear topcoat. Prepare, pretreat, and apply coating to exposed metal surfaces to comply with coating and resin manufacturers' written instructions.

PART 3 - EXECUTION

3.1 EXAMINATION

A. Examine substrates, areas, and conditions, with Installer present, to verify actual locations, dimensions, and other conditions affecting performance of the Work.

B. Examine walls, roof edges, and parapets for suitable conditions for roof specialties.

C. Verify that substrate is sound, dry, smooth, clean, sloped for drainage where applicable, and securely anchored.

D. Proceed with installation only after unsatisfactory conditions have been corrected.

3.2 UNDERLAYMENT INSTALLATION

A. Self-Adhering Sheet Underlayment: Apply primer if required by manufacturer. Comply with temperature restrictions of underlayment manufacturer for installation. Apply wrinkle free, in shingle fashion to shed water, and with end laps of not less than 6 inches staggered 24 inches between courses. Overlap side edges not less than 3-1/2 inches. Roll laps with roller. Cover underlayment within 14 days.

1. Apply continuously under copings roof-edge specialties and reglets and counterflashings.

Copyright © 2025 by the American Institute of Architects. Warning: This AIA MasterSpec-based document is protected by U.S. Copyright Law and International Treaties. It was created by "Michael Shilale Architects, LLP" for "Renovation of Rockland Green Administrative Headquarters and Construction of an Immersive Theatre Experience". A valid, current MasterSpec license is required for editing and use of this document for any other project.(22360)

2. Coordinate application of self-adhering sheet underlayment under roof specialties with requirements for continuity with adjacent air barrier materials.

B. Slip Sheet: Install with tape or adhesive for temporary anchorage to minimize use of mechanical fasteners under roof specialties. Apply in shingle fashion to shed water, with lapped joints of not less than 2 inches.

3.3 INSTALLATION, GENERAL

A. General: Install roof specialties according to manufacturer's written instructions. Anchor roof specialties securely in place, with provisions for thermal and structural movement. Use fasteners, solder, protective coatings, separators, underlayments, sealants, and other miscellaneous items as required to complete roof-specialty systems.

1. Install roof specialties level, plumb, true to line and elevation; with limited oil-canning and without warping, jogs in alignment, buckling, or tool marks.
2. Provide uniform, neat seams with minimum exposure of solder and sealant.
3. Install roof specialties to fit substrates and to result in weathertight performance. Verify shapes and dimensions of surfaces to be covered before manufacture.
4. Torch cutting of roof specialties is not permitted.
5. Do not use graphite pencils to mark metal surfaces.

B. Metal Protection: Protect metals against galvanic action by separating dissimilar metals from contact with each other or with corrosive substrates by painting contact surfaces with bituminous coating or by other permanent separation as recommended by manufacturer.

1. Coat concealed side of uncoated aluminum and stainless-steel roof specialties with bituminous coating where in contact with wood, ferrous metal, or cementitious construction.
2. Bed flanges in thick coat of asphalt roofing cement where required by manufacturers of roof specialties for waterproof performance.

C. Expansion Provisions: Allow for thermal expansion of exposed roof specialties.

1. Space movement joints at a maximum of 12 feet with no joints within 18 inches of corners or intersections unless otherwise indicated on Drawings.
2. When ambient temperature at time of installation is between 40 and 70 deg F, set joint members for 50 percent movement each way. Adjust setting proportionately for installation at higher ambient temperatures.

D. Fastener Sizes: Use fasteners of sizes that penetrate .

E. Seal concealed joints with butyl sealant as required by roofing-specialty manufacturer.

F. Seal joints as required for weathertight construction. Place sealant to be completely concealed in joint. Do not install sealants at temperatures below 40 deg F.

G. Soldered Joints: Clean surfaces to be soldered, removing oils and foreign matter. Pre-tin edges of sheets to be soldered to a width of 1-1/2 inches; however, reduce pre-tinning where pre-

Copyright © 2025 by the American Institute of Architects. Warning: This AIA MasterSpec-based document is protected by U.S. Copyright Law and International Treaties. It was created by "Michael Shilale Architects, LLP" for "Renovation of Rockland Green Administrative Headquarters and Construction of an Immersive Theatre Experience". A valid, current MasterSpec license is required for editing and use of this document for any other project.(22360)

tinned surface would show in completed Work. Tin edges of uncoated copper sheets using solder for copper. Do not use torches for soldering. Heat surfaces to receive solder and flow solder into joint. Fill joint completely. Completely remove flux and spatter from exposed surfaces.

3.4 COPING INSTALLATION

A. Install cleats, anchor plates, and other anchoring and attachment accessories and devices with concealed fasteners.

B. Anchor copings with manufacturer's required devices, fasteners, and fastener spacing to meet performance requirements.

1. Interlock face and back leg drip edges of snap-on coping cap into cleated anchor plates anchored to substrate at manufacturer's required spacing that meets performance requirements .

3.5 CLEANING AND PROTECTION

A. Clean exposed metal surfaces of substances that interfere with uniform oxidation and weathering.

B. Clean and neutralize flux materials. Clean off excess solder and sealants.

C. Remove temporary protective coverings and strippable films as roof specialties are installed. On completion of installation, clean finished surfaces, including removing unused fasteners, metal filings, pop rivet stems, and pieces of flashing. Maintain roof specialties in a clean condition during construction.

D. Replace roof specialties that have been damaged or that cannot be successfully repaired by finish touchup or similar minor repair procedures.

END OF SECTION 077100

Copyright © 2025 by the American Institute of Architects. Warning: This AIA MasterSpec-based document is protected by U.S. Copyright Law and International Treaties. It was created by "Michael Shilale Architects, LLP" for "Renovation of Rockland Green Administrative Headquarters and Construction of an Immersive Theatre Experience". A valid, current MasterSpec license is required for editing and use of this document for any other project.(22360)

SECTION 077200 - ROOF ACCESSORIES

PART 1 - GENERAL

1.1 RELATED DOCUMENTS

A. Drawings and general provisions of the Contract, including General and Supplementary Conditions and Division 01 Specification Sections, apply to this Section.

1.2 SUMMARY

A. Section Includes:

1. Roof curbs.

B. Related Sections:

1. Section 055213 "Pipe and Tube Railings" for safety railing systems not attached to roof-hatch curbs.
2. Section 076200 "Sheet Metal Flashing and Trim" for shop- and field-formed metal flashing, roof-drainage systems, roof expansion-joint covers, and miscellaneous sheet metal trim and accessories.
3. Section 077100 "Roof Specialties" for manufactured fasciae, copings, gravel stops, gutters and downspouts, and counterflashing.
4. Section 284621.11 "Addressable Fire-Alarm Systems" for interconnects to automatically operated heat and smoke vents.

1.3 COORDINATION

A. Coordinate layout and installation of roof accessories with roofing membrane and base flashing and interfacing and adjoining construction to provide a leakproof, weathertight, secure, and noncorrosive installation.

B. Coordinate dimensions with rough-in information or Shop Drawings of equipment to be supported.

1.4 ACTION SUBMITTALS

A. Product Data: For each type of roof accessory.

1. Include construction details, material descriptions, dimensions of individual components and profiles, and finishes.

B. Shop Drawings: For roof accessories.

Copyright © 2025 by the American Institute of Architects. Warning: This AIA MasterSpec-based document is protected by U.S. Copyright Law and International Treaties. It was created by "Michael Shilale Architects, LLP" for "Renovation of Rockland Green Administrative Headquarters and Construction of an Immersive Theatre Experience". A valid, current MasterSpec license is required for editing and use of this document for any other project.(22360)

1. Include plans, elevations, keyed details, and attachments to other work. Indicate dimensions, loadings, and special conditions. Distinguish between plant- and field-assembled work.

C. Samples: For each exposed product and for each color and texture specified, prepared on Samples of size to adequately show color.

D. Delegated-Design Submittal: For roof curbs equipment supports indicated to comply with performance requirements and design criteria, including analysis data signed and sealed by the qualified professional engineer responsible for their preparation.

1. Detail mounting, securing, and flashing of roof-mounted items to roof structure. Indicate coordinating requirements with roof membrane system.
2. Wind-Restraint Details: Detail fabrication and attachment of wind restraints. Show anchorage details and indicate quantity, diameter, and depth of penetration of anchors.

1.5 INFORMATIONAL SUBMITTALS

A. Coordination Drawings: Roof plans, drawn to scale, and coordinating penetrations and roof-mounted items. Show the following:

1. Size and location of roof accessories specified in this Section.
2. Method of attaching roof accessories to roof or building structure.
3. Other roof-mounted items including mechanical and electrical equipment, ductwork, piping, and conduit.
4. Required clearances.

B. Sample Warranties: For manufacturer's special warranties.

1.6 CLOSEOUT SUBMITTALS

A. Operation and Maintenance Data: For roof accessories to include in operation and maintenance manuals.

1.7 WARRANTY

A. Special Warranty on Painted Finishes: Manufacturer's standard form in which manufacturer agrees to repair finishes or replace roof accessories that show evidence of deterioration of factory-applied finishes within specified warranty period.

1. Fluoropolymer Finish: Deterioration includes, but is not limited to, the following:
   a. Color fading more than 5 Hunter units when tested according to ASTM D 2244.
   b. Chalking in excess of a No. 8 rating when tested according to ASTM D 4214.
   c. Cracking, checking, peeling, or failure of paint to adhere to bare metal.
2. Finish Warranty Period: 20 years from date of Substantial Completion.

Copyright © 2025 by the American Institute of Architects. Warning: This AIA MasterSpec-based document is protected by U.S. Copyright Law and International Treaties. It was created by "Michael Shilale Architects, LLP" for "Renovation of Rockland Green Administrative Headquarters and Construction of an Immersive Theatre Experience". A valid, current MasterSpec license is required for editing and use of this document for any other project.(22360)

PART 2 - PRODUCTS

2.1 PERFORMANCE REQUIREMENTS

A. General Performance: Roof accessories shall withstand exposure to weather and resist thermally induced movement without failure, rattling, leaking, or fastener disengagement due to defective manufacture, fabrication, installation, or other defects in construction.

B. Delegated Design: Engage a qualified professional engineer, as defined in Section 014000 "Quality Requirements," to design roof curbs and equipment supports to comply with wind performance requirements, including comprehensive engineering analysis by a qualified professional engineer, using performance requirements and design criteria indicated.

C. Wind-Restraint Performance: As stated in specification section 075323 EPDM Roofing .

2.2 ROOF CURBS

A. Roof Curbs: Internally reinforced roof-curb units capable of supporting superimposed live and dead loads, including equipment loads and other construction indicated on Drawings, bearing continuously on roof structure, and capable of meeting performance requirements; with welded or mechanically fastened and sealed corner joints, straight sides, and integrally formed deck-mounting flange at perimeter bottom.

B. Size: Coordinate dimensions with roughing-in information or Shop Drawings of equipment to be supported.

C. Material: Zinc-coated (galvanized) steel sheet, 0.064 inch thick.

1. Finish: Two-coat fluoropolymer .
2. Color: As selected by Architect from manufacturer's full range .

D. Construction:

1. Curb Profile: Profile as indicated on Drawings compatible with roofing system.
2. On ribbed or fluted metal roofs, form deck-mounting flange at perimeter bottom to conform to roof profile.
3. Fabricate curbs to minimum height of 12 inches above roofing surface unless otherwise indicated.
4. Top Surface: Level top of curb, with roof slope accommodated by sloping deck-mounting flange .
5. Sloping Roofs: Where roof slope exceeds 1:48, fabricate curb with perimeter curb height tapered to accommodate roof slope so that top surface of perimeter curb is level. Equip unit with water diverter or cricket on side that obstructs water flow.
6. Insulation: Factory insulated with 1-1/2-inch- thick glass-fiber board insulation.
7. Liner: Same material as curb, of manufacturer's standard thickness and finish.
8. Nailer: Factory-installed wood nailer under top flange on side of curb, continuous around curb perimeter.

Copyright © 2025 by the American Institute of Architects. Warning: This AIA MasterSpec-based document is protected by U.S. Copyright Law and International Treaties. It was created by "Michael Shilale Architects, LLP" for "Renovation of Rockland Green Administrative Headquarters and Construction of an Immersive Theatre Experience". A valid, current MasterSpec license is required for editing and use of this document for any other project.(22360)

9. Wind Restraint Straps and Base Flange Attachment: Provide wind restraint straps, welded strap connectors, and base flange attachment to roof structure at perimeter of curb, of size and spacing required to meet wind uplift requirements.
10. Metal Counterflashing: Manufacturer's standard, removable, fabricated of same metal and finish as curb.

2.3 HEAT AND SMOKE VENTS

A. Hatch-Type Heat and Smoke Vents: Manufacturer's standard, with single -walled insulated curbs, welded or mechanically fastened and sealed corner joints, integral condensation gutter, and cap flashing. Fabricate with insulated double-walled lid and continuous weathertight perimeter lid gaskets, and equip with automatic self-lifting mechanisms and UL-listed fusible links rated at 165 deg F .

1. Type and Size: Single-leaf lid, size to match existing smoke vents. .
2. Loads: Minimum external live load and 30-lbf/sq. ft. internal uplift load.
   a. When release is actuated, lid shall open against 10-lbf/sq. ft. snow or wind load and lock in position.
3. Heat and Smoke Vent Standard: Provide units that have been tested and listed to comply with UL 793 .
4. Curb, Framing, and Lid Material: Zinc-coated (galvanized) steel sheet.
   a. Thickness: Manufacturer's standard thickness for hatch size indicated .
   b. Finish: Baked enamel or powder coat .
   c. Color: As selected by Architect from manufacturer's full range .
5. Curb, Framing, and Lid Material: Aluminum sheet.
   a. Thickness: Manufacturer's standard thickness for hatch size indicated .
   b. Finish: Baked enamel or powder coat .
   c. Color: As selected by Architect from manufacturer's full range .
6. Construction:
   a. Insulation: Glass-fiber board Polyisocyanurate board.
   b. Nailer: Factory-installed wood nailer continuous around hatch perimeter.
   c. Hatch Lid: Opaque, insulated, and double walled, with manufacturer's standard metal liner of same material and finish as outer metal lid.
   d. Hatch Lid: Glazed, insulated, and double walled, with manufacturer's standard metal liner of same material and finish as outer metal lid.
   e. Exterior Curb Liner: Manufacturer's standard, of same material and finish as metal curb.
   f. Fabricate curbs to minimum height of 18" above roofing surface unless otherwise indicated.
7. Hardware: Manufacturer's standard stainless steel; with hinges, hold-open devices, and independent manual-release devices for and outside operation of lids.

2.4 METAL MATERIALS

A. Zinc-Coated (Galvanized) Steel Sheet: ASTM A 653/A 653M, G90 coating designation and mill phosphatized for field painting where indicated.

Copyright © 2025 by the American Institute of Architects. Warning: This AIA MasterSpec-based document is protected by U.S. Copyright Law and International Treaties. It was created by "Michael Shilale Architects, LLP" for "Renovation of Rockland Green Administrative Headquarters and Construction of an Immersive Theatre Experience". A valid, current MasterSpec license is required for editing and use of this document for any other project.(22360)

1. Baked-Enamel or Powder-Coat Finish: After cleaning and pretreating, apply manufacturer's standard two-coat, baked-on finish consisting of prime coat and thermosetting topcoat to a minimum dry film thickness of 2 mils.

B. Aluminum-Zinc Alloy-Coated Steel Sheet: ASTM A 792/A 792M, AZ50 coated.

1. Baked-Enamel or Powder-Coat Finish: After cleaning and pretreating, apply manufacturer's standard two-coat, baked-on finish consisting of prime coat and thermosetting topcoat to a minimum dry film thickness of 2 mils.

C. Aluminum Sheet: ASTM B 209, manufacturer's standard alloy for finish required, with temper to suit forming operations and performance required.

1. Baked-Enamel or Powder-Coat Finish: AAMA 2603 except with a minimum dry film thickness of 1.5 mils. Comply with coating manufacturer's written instructions for cleaning, conversion coating, and applying and baking finish.

D. Aluminum Extrusions and Tubes: ASTM B 221, manufacturer's standard alloy and temper for type of use, finished to match assembly where used; otherwise mill finished.

E. Stainless-Steel Sheet and Shapes: ASTM A 240/A 240M or ASTM A 666, Type 304.

F. Steel Shapes: ASTM A 36/A 36M, hot-dip galvanized according to ASTM A 123/A 123M unless otherwise indicated.

2.5 MISCELLANEOUS MATERIALS

A. General: Provide materials and types of fasteners, protective coatings, sealants, and other miscellaneous items required by manufacturer for a complete installation.

B. Polyisocyanurate Board Insulation: ASTM C 1289, thickness and thermal resistivity as indicated.

C. Wood Nailers: Softwood lumber, pressure treated with waterborne preservatives for aboveground use, acceptable to authorities having jurisdiction, and complying with AWPA C2; not less than 1-1/2 inches thick.

D. Bituminous Coating: Cold-applied asphalt emulsion complying with ASTM D 1187/D 1187M.

E. Underlayment:

1. Polyethylene Sheet: 6-mil- thick polyethylene sheet complying with ASTM D 4397.
2. Slip Sheet: Building paper, 3 lb/100 sq. ft. minimum, rosin sized.
3. Self-Adhering, High-Temperature Sheet: Minimum 30 to 40 mils thick, consisting of slip-resisting polyethylene-film top surface laminated to layer of butyl or SBS-modified asphalt adhesive, with release-paper backing; cold applied. Provide primer when recommended by underlayment manufacturer.
4. Fasteners: Roof accessory manufacturer's recommended fasteners suitable for application and metals being fastened. Match finish of exposed fasteners with finish of material being

Copyright © 2025 by the American Institute of Architects. Warning: This AIA MasterSpec-based document is protected by U.S. Copyright Law and International Treaties. It was created by "Michael Shilale Architects, LLP" for "Renovation of Rockland Green Administrative Headquarters and Construction of an Immersive Theatre Experience". A valid, current MasterSpec license is required for editing and use of this document for any other project.(22360)

fastened. Provide nonremovable fastener heads to exterior exposed fasteners. Furnish the following unless otherwise indicated:

5. Fasteners for Zinc-Coated or Aluminum-Zinc Alloy-Coated Steel: Series 300 stainless steel or hot-dip zinc-coated steel according to ASTM A 153/A 153M or ASTM F 2329.
6. Fasteners for Aluminum Sheet: Aluminum or Series 300 stainless steel.
7. Fasteners for Stainless-Steel Sheet: Series 300 stainless steel.

F. Gaskets: Manufacturer's standard tubular or fingered design of neoprene, EPDM, PVC, or silicone or a flat design of foam rubber, sponge neoprene, or cork.

G. Elastomeric Sealant: ASTM C 920, elastomeric polyurethane polymer sealant as recommended by roof accessory manufacturer for installation indicated; low modulus; of type, grade, class, and use classifications required to seal joints and remain watertight.

H. Butyl Sealant: ASTM C 1311, single-component, solvent-release butyl rubber sealant; polyisobutylene plasticized; heavy bodied for expansion joints with limited movement.

I. Asphalt Roofing Cement: ASTM D 4586/D 4586M, asbestos free, of consistency required for application.

2.6 GENERAL FINISH REQUIREMENTS

A. Comply with NAAMM's "Metal Finishes Manual for Architectural and Metal Products" for recommendations for applying and designating finishes.

B. Appearance of Finished Work: Noticeable variations in same piece are not acceptable. Variations in appearance of adjoining components are acceptable if they are within the range of approved Samples and are assembled or installed to minimize contrast.

PART 3 - EXECUTION

3.1 EXAMINATION

A. Examine substrates, areas, and conditions, with Installer present, to verify actual locations, dimensions, and other conditions affecting performance of the Work.

B. Verify that substrate is sound, dry, smooth, clean, sloped for drainage, and securely anchored.

C. Verify dimensions of roof openings for roof accessories.

D. Proceed with installation only after unsatisfactory conditions have been corrected.

3.2 INSTALLATION

A. General: Install roof accessories according to manufacturer's written instructions.

Copyright © 2025 by the American Institute of Architects. Warning: This AIA MasterSpec-based document is protected by U.S. Copyright Law and International Treaties. It was created by "Michael Shilale Architects, LLP" for "Renovation of Rockland Green Administrative Headquarters and Construction of an Immersive Theatre Experience". A valid, current MasterSpec license is required for editing and use of this document for any other project.(22360)

1. Install roof accessories level; plumb; true to line and elevation; and without warping, jogs in alignment, buckling, or tool marks.
2. Anchor roof accessories securely in place so they are capable of resisting indicated loads.
3. Use fasteners, separators, sealants, and other miscellaneous items as required to complete installation of roof accessories and fit them to substrates.
4. Install roof accessories to resist exposure to weather without failing, rattling, leaking, or loosening of fasteners and seals.

B. Metal Protection: Protect metals against galvanic action by separating dissimilar metals from contact with each other or with corrosive substrates by painting contact surfaces with bituminous coating or by other permanent separation as recommended by manufacturer.

1. Coat concealed side of uncoated aluminum roof accessories with bituminous coating where in contact with wood, ferrous metal, or cementitious construction.
2. Underlayment: Where installing roof accessories directly on cementitious or wood substrates, install a course of underlayment and cover with manufacturer's recommended slip sheet.
3. Bed flanges in thick coat of asphalt roofing cement where required by manufacturers of roof accessories for waterproof performance.

C. Roof Curb Installation: Install each roof curb so top surface is level.

D. Equipment Support Installation: Install equipment supports so top surfaces are level with each other.

E. Heat and Smoke Vent Installation:

1. Install heat and smoke vent so top perimeter surfaces are level.
2. Install and test heat and smoke vents and their components for proper operation according to NFPA 204.

F. Seal joints with elastomeric sealant as required by roof accessory manufacturer.

3.3 REPAIR AND CLEANING

A. Galvanized Surfaces: Clean field welds, bolted connections, and abraded areas and repair galvanizing according to ASTM A 780/A 780M.

B. Touch up factory-primed surfaces with compatible primer ready for field painting according to Section 099113 "Exterior Painting."

C. Clean exposed surfaces according to manufacturer's written instructions.

D. Clean off excess sealants.

E. Replace roof accessories that have been damaged or that cannot be successfully repaired by finish touchup or similar minor repair procedures.

Copyright © 2025 by the American Institute of Architects. Warning: This AIA MasterSpec-based document is protected by U.S. Copyright Law and International Treaties. It was created by "Michael Shilale Architects, LLP" for "Renovation of Rockland Green Administrative Headquarters and Construction of an Immersive Theatre Experience". A valid, current MasterSpec license is required for editing and use of this document for any other project.(22360)

END OF SECTION 077200

Copyright © 2025 by the American Institute of Architects. Warning: This AIA MasterSpec-based document is protected by U.S. Copyright Law and International Treaties. It was created by "Michael Shilale Architects, LLP" for "Renovation of Rockland Green Administrative Headquarters and Construction of an Immersive Theatre Experience". A valid, current MasterSpec license is required for editing and use of this document for any other project.(22360)

SECTION 077253 - SNOW GUARDS

PART 1 - GENERAL

1.1 SUMMARY

A. Section Includes:

1. Rail-type, flat-mounted metal snow guards for exposed fastened metal roofs.
2. Rail-type, seam-mounted metal snow guards for standing-seam metal roofs.

1.2 PREINSTALLATION MEETINGS

A. Preinstallation Conference: Conduct conference at Project site .

1.3 ACTION SUBMITTALS

A. Product Data: For each type of product, include construction details, material descriptions, dimensions of individual components and profiles, and finishes.

B. Shop Drawings: Include roof plans showing layouts and attachment details of snow guards.

1. Include details of assemblies. Indicate dimensions, weights, loads, required clearances, method of field assembly, components, and location and size of each field connection.

C. Samples: Include bracket, 12-inch- long rail, and installation hardware.

D. Delegated Design Submittals: For snow guards, include analysis reports signed and sealed by the qualified professional engineer responsible for their preparation.

1. Include calculation of number and location of snow guards.

1.4 INFORMATIONAL SUBMITTALS

A. Qualification Data: For manufacturer and delegated design engineer.

B. Evaluation Reports: For each type of snow guard, from ICC-ES, for tests performed by a recognized ISO 17025-accredited independent testing agency, indicating load-to-failure of attachment to roof system identical to roof system used on this Project.

C. Sample warranties.

Copyright © 2025 by the American Institute of Architects. Warning: This AIA MasterSpec-based document is protected by U.S. Copyright Law and International Treaties. It was created by "Michael Shilale Architects, LLP" for "Renovation of Rockland Green Administrative Headquarters and Construction of an Immersive Theatre Experience". A valid, current MasterSpec license is required for editing and use of this document for any other project.(22360)

1.5 QUALITY ASSURANCE

A. Qualifications:

1. Manufacturers: Current certificate holder for compliance with ISO 9001:2015. Manufactured in an ISO 9001:2015-certified and ICC-audited facility.
2. Delegated Design Engineer: A professional engineer who is legally qualified to practice in jurisdiction where Project is located and who is experienced in providing engineering services of the kind indicated.

1.6 MOCKUPS

A. Build mockups to verify selections made under Sample submittals, to demonstrate aesthetic effects, and to set quality standards for fabrication and installation.

1. Build mockups as indicated on Drawings.
2. Build mockups for each form and finish of railing, consisting of two posts, top rail, infill area, and anchorage system components that are full height and are not less than 24 inches in length.
3. Subject to compliance with requirements, approved mockups may become part of the completed Work if undisturbed at time of Substantial Completion.

1.7 DELIVERY, STORAGE, AND HANDLING

A. Deliver components to Project site properly packaged to provide protection during transport, delivery, and handling.

B. Store products in manufacturer's original labeled and unopened packaging in a clean and dry location, protected from potential damage, until ready for application.

1.8 WARRANTY

A. Special Warranty: Manufacturer warrants that all products manufactured by it and bearing its name are free from defects in material and workmanship on the date of first sale and for the life of the roof. The sole and exclusive remedy for breach of this warranty is repair or replacement of manufactured products that are determined to be defective.

1. Warranty is conditional upon the return of products claimed to be defective.
2. Warranty Period: Limited Lifetime from date of first sale.

B. Snow Retention System Warranty: Manufacturer warrants that snow guard system will not pull off the seam, break, or otherwise yield, causing the system to release; that snow guard system cross members and its anchorage will not buckle, break, or otherwise yield or separate from the clamps; that snow guard system will not prematurely or excessively corrode and will not cause premature and excessive corrosion of the roof system; and that snow guard system will not cause structural damage to the roof panels.

Copyright © 2025 by the American Institute of Architects. Warning: This AIA MasterSpec-based document is protected by U.S. Copyright Law and International Treaties. It was created by "Michael Shilale Architects, LLP" for "Renovation of Rockland Green Administrative Headquarters and Construction of an Immersive Theatre Experience". A valid, current MasterSpec license is required for editing and use of this document for any other project.(22360)

1. In the event of system failure, manufacturer will provide comparable manufacturer-branded replacement parts and labor necessary to repair the snow retention system or component part. Replacement parts will be warranted for the remainder of the original warranty period.
2. Manufacturer will make final determination as to the existence or cause of any alleged system failure and whether the roof is no longer commercially serviceable.
3. Warranty Period: Limited Lifetime from date of delivery.

PART 2 - PRODUCTS

2.1 SOURCE LIMITATIONS

A. Provide components and materials specified in this Section from single manufacturer for a complete and compatible assembly.

2.2 PERFORMANCE REQUIREMENTS

A. Delegated Design: Engage a qualified professional engineer, as defined in Section 014000 "Quality Requirements," to design snow guards, including attachment to roofing material and roof deck, as applicable for attachment method, based on the following:

1. Roof snow load.
2. Snow drifting.
3. Roof slope.
4. Roof type.
5. Roof dimensions.
6. Roofing substrate type and thickness.
7. Snow guard type.
8. Snow guard fastening method and strength.
9. Snow guard spacing.
10. Coefficient of Friction between Snow and Roof Surface: Zero.
11. Factor of Safety: 3 .

B. Provide snow guards that withstand exposure to weather and accommodate thermally induced movement without failure, rattling, or fastener disengagement.

1. Temperature Change: 200 deg F , ambient and material surfaces .

C. Snow guards to withstand the effects of gravity loads and the following loads and stresses within limits and under conditions indicated:

1. Snow Loads: As indicated on Drawings .

2.3 RAIL-TYPE SNOW GUARDS

A. Rail-Type, Flat-Mounted Metal Snow Guards for Exposed Fastened Metal Roofs:

Copyright © 2025 by the American Institute of Architects. Warning: This AIA MasterSpec-based document is protected by U.S. Copyright Law and International Treaties. It was created by "Michael Shilale Architects, LLP" for "Renovation of Rockland Green Administrative Headquarters and Construction of an Immersive Theatre Experience". A valid, current MasterSpec license is required for editing and use of this document for any other project.(22360)

1. Basis-of-Design Product: Subject to compliance with requirements, provide S-5! Metal Roof Innovations, Ltd.; VersaGard Snow Retention System or comparable product by one of the following:
   a. Levi's Building Components.
   b. LMCurbs.
   c. Red Dot Products.
   d. Rocky Mountain Snow Guards, Inc.
   e. Sky Products.
2. Description: Units fabricated from metal baseplate anchored to fixed bracket and equipped with two .
3. Brackets, Baseplates, and Bars: ASTM B221, 6061-T6 aluminum; mill finish.
   a. Profile: Round with integral track to accept color-matching inserts of material and finish used for metal roof.
4. Fasteners: Manufacturer's standard; of size, type, grade, and class required for application, suitable for secure attachment into substrate, acceptable to authorities having jurisdiction, and that comply with requirements specified for material and manufacture.
5. Accessories: Manufacturer's standard; include splice connectors, collars, end caps, and associated mounting accessories matching rail finishes and meeting performance requirements.

B. Rail-Type, Seam-Mounted Metal Snow Guards for Standing-Seam Metal Roofs:

1. Basis-of-Design Product: Subject to compliance with requirements, provide S-5! Metal Roof Innovations, Ltd.; ColorGard Snow Retention System or comparable product by one of the following:
   a. Levi's Building Components.
   b. LMCurbs.
   c. Red Dot Products.
   d. Rocky Mountain Snow Guards, Inc.
   e. Sky Products.
2. Description: Snow guard rails fabricated from metal pipes , anchored to brackets and equipped with two rails .
3. Brackets and Bars: ASTM B221, 6000 series alloy and temper aluminum; mill finish.
   a. Profile: Round .
4. Seam Clamps: Red brass, copper UNS C23000 alloy with 300 series stainless steel, 18-8 alloy setscrews incorporating round nonpenetrating point; designed for use with applicable roofing system to which clamp is attached.
5. Seam Clamps: ASTM B221, 6061-T6 aluminum extrusion or ASTM B85/B85M aluminum casting with 300 series stainless steel, 18-8 alloy setscrews incorporating round nonpenetrating point; designed for use with applicable roofing system to which clamp is attached.
6. Accessories: Manufacturer's standard; include splice connectors, collars, end caps, and associated mounting accessories matching rail finishes and meeting performance requirements.

Copyright © 2025 by the American Institute of Architects. Warning: This AIA MasterSpec-based document is protected by U.S. Copyright Law and International Treaties. It was created by "Michael Shilale Architects, LLP" for "Renovation of Rockland Green Administrative Headquarters and Construction of an Immersive Theatre Experience". A valid, current MasterSpec license is required for editing and use of this document for any other project.(22360)

PART 3 - EXECUTION

3.1 EXAMINATION

A. Examine substrates and conditions, with Installer present, for compliance with requirements for installation tolerances, snow guard attachment, and other conditions affecting performance of the Work.

B. Proceed with installation only after unsatisfactory conditions have been corrected.

3.2 PREPARATION

A. Clean and prepare substrates for installation of snow guards in accordance with snow guard manufacturer's written instructions.

3.3 INSTALLATION

A. Install snow guards in accordance with manufacturer's written instructions.

1. Space rows as indicated on Shop Drawings.
2. Space rows as recommended in writing by manufacturer.

B. Attachment for Exposed Fastened Metal Roofing:

1. Do not use fasteners that will void metal roofing finish warranty.
2. Rail-Type, Flat-Mounted Snow Guards:
   a. Install brackets in straight rows.
   b. Mechanically fasten to metal roofing, using mechanical fasteners identical to those used to secure metal roofing to substrate.
   c. Install cross members to brackets.

C. Attachment for Standing-Seam Metal Roofing:

1. Do not use fasteners that will penetrate metal roofing or fastening methods that void metal roofing finish warranty.
2. Rail-Type, Seam-Mounted Snow Guards:
   a. Install brackets to vertical ribs in straight rows.
   b. Secure with stainless steel setscrews, incorporating round nonpenetrating point, on same side of standing seam.
   c. Torque setscrew in accordance with manufacturer's written instructions.
   d. Install cross members to brackets.

END OF SECTION 077253

Copyright © 2025 by the American Institute of Architects. Warning: This AIA MasterSpec-based document is protected by U.S. Copyright Law and International Treaties. It was created by "Michael Shilale Architects, LLP" for "Renovation of Rockland Green Administrative Headquarters and Construction of an Immersive Theatre Experience". A valid, current MasterSpec license is required for editing and use of this document for any other project.(22360)

SECTION 078413 - PENETRATION FIRESTOPPING

PART 1 - GENERAL

1.1 RELATED DOCUMENTS

A. Drawings and general provisions of the Contract, including General and Supplementary Conditions and Division 01 Specification Sections, apply to this Section.

1.2 SUMMARY

A. Section Includes:

1. Penetrations in fire-resistance-rated walls.
2. Penetrations in horizontal assemblies.
3. Penetrations in smoke barriers.

B. Related Requirements:

1. Section 078443 "Joint Firestopping" for joints in or between fire-resistance-rated construction, at exterior curtain-wall/floor intersections, and in smoke barriers.

1.3 PREINSTALLATION MEETINGS

A. Preinstallation Conference: Conduct conference at Project site .

1.4 ACTION SUBMITTALS

A. Product Data: For each type of product.

B. Product Schedule: For each penetration firestopping system. Include location, illustration of firestopping system, and design designation of qualified testing and inspecting agency.

1.5 INFORMATIONAL SUBMITTALS

A. Product Test Reports: For each penetration firestopping system, for tests performed by a qualified testing agency.

1.6 CLOSEOUT SUBMITTALS

A. Installer Certificates: From Installer indicating that penetration firestopping systems have been installed in compliance with requirements and manufacturer's written instructions.

Copyright © 2025 by the American Institute of Architects. Warning: This AIA MasterSpec-based document is protected by U.S. Copyright Law and International Treaties. It was created by "Michael Shilale Architects, LLP" for "Renovation of Rockland Green Administrative Headquarters and Construction of an Immersive Theatre Experience". A valid, current MasterSpec license is required for editing and use of this document for any other project.(22360)

1.7 QUALITY ASSURANCE

1.8 PROJECT CONDITIONS

A. Environmental Limitations: Do not install penetration firestopping system when ambient or substrate temperatures are outside limits permitted by penetration firestopping system manufacturers or when substrates are wet because of rain, frost, condensation, or other causes.

B. Install and cure penetration firestopping materials per manufacturer's written instructions using natural means of ventilations or, where this is inadequate, forced-air circulation.

1.9 COORDINATION

A. Coordinate construction of openings and penetrating items to ensure that penetration firestopping systems can be installed according to specified firestopping system design.

B. Coordinate sizing of sleeves, openings, core-drilled holes, or cut openings to accommodate penetration firestopping systems.

PART 2 - PRODUCTS

2.1 PERFORMANCE REQUIREMENTS

A. Fire-Test-Response Characteristics:

1. Perform penetration firestopping system tests by a qualified testing agency acceptable to authorities having jurisdiction.
2. Test per testing standards referenced in "Penetration Firestopping Systems" Article. Provide rated systems complying with the following requirements:
   a. Penetration firestopping systems shall bear classification marking of a qualified testing agency.
      1) UL in its "Fire Resistance Directory."
      2) FM Global in its "Building Materials Approval Guide."

2.2 PENETRATION FIRESTOPPING SYSTEMS

A. Penetration Firestopping Systems: Systems that resist spread of fire, passage of smoke and other gases, and maintain original fire-resistance rating of construction penetrated. Penetration firestopping systems shall be compatible with one another, with the substrates forming openings, and with penetrating items if any.

B. Penetrations in Fire-Resistance-Rated Walls: Penetration firestopping systems with ratings determined per ASTM E 814 or UL 1479, based on testing at a positive pressure differential of 0.01-inch wg.

Copyright © 2025 by the American Institute of Architects. Warning: This AIA MasterSpec-based document is protected by U.S. Copyright Law and International Treaties. It was created by "Michael Shilale Architects, LLP" for "Renovation of Rockland Green Administrative Headquarters and Construction of an Immersive Theatre Experience". A valid, current MasterSpec license is required for editing and use of this document for any other project.(22360)

C. Penetrations in Horizontal Assemblies: Penetration firestopping systems with ratings determined per ASTM E 814 or UL 1479, based on testing at a positive pressure differential of 0.01-inch wg.

1. F-Rating: At least one hour, but not less than the fire-resistance rating of constructions penetrated.
2. T-Rating: At least one hour, but not less than the fire-resistance rating of constructions penetrated except for floor penetrations within the cavity of a wall.
3. W-Rating: Provide penetration firestopping systems showing no evidence of water leakage when tested according to UL 1479.

D. Penetrations in Smoke Barriers: Penetration firestopping systems with ratings determined per UL 1479, based on testing at a positive pressure differential of 0.30-inch wg.

1. L-Rating: Not exceeding 5.0 cfm/sq. ft. of penetration opening at and no more than 50-cfm cumulative total for any 100 sq. ft. at both ambient and elevated temperatures.

E. Exposed Penetration Firestopping Systems: Flame-spread and smoke-developed indexes of less than 25 and 450, respectively, per ASTM E 84.

F. Accessories: Provide components for each penetration firestopping system that are needed to install fill materials and to maintain ratings required. Use only those components specified by penetration firestopping system manufacturer and approved by qualified testing and inspecting agency for conditions indicated.

1. Permanent forming/damming/backing materials.
2. Substrate primers.
3. Collars.
4. Steel sleeves.

2.3 FILL MATERIALS

A. Firestop Devices: Factory-assembled collars formed from galvanized steel and lined with intumescent material sized to fit specific diameter of penetrant.

B. Intumescent Putties: Nonhardening, water-resistant, intumescent putties containing no solvents or inorganic fibers.

C. Mortars: Prepackaged dry mixes consisting of a blend of inorganic binders, hydraulic cement, fillers and lightweight aggregate formulated for mixing with water at Project site to form a nonshrinking, homogeneous mortar.

D. Pillows/Bags: Reusable heat-expanding pillows/bags consisting of glass-fiber cloth cases filled with a combination of mineral-fiber, water-insoluble expansion agents, and fire-retardant additives. Where exposed, cover openings with steel-reinforcing wire mesh to protect pillows/bags from being easily removed.

E. Silicone Foams: Multicomponent, silicone-based liquid elastomers that, when mixed, expand and cure in place to produce a flexible, nonshrinking foam.

Copyright © 2025 by the American Institute of Architects. Warning: This AIA MasterSpec-based document is protected by U.S. Copyright Law and International Treaties. It was created by "Michael Shilale Architects, LLP" for "Renovation of Rockland Green Administrative Headquarters and Construction of an Immersive Theatre Experience". A valid, current MasterSpec license is required for editing and use of this document for any other project.(22360)

F. Silicone Sealants: Single-component, silicone-based, neutral-curing elastomeric sealants.

2.4 MIXING

A. Penetration Firestopping Materials: For those products requiring mixing before application, comply with penetration firestopping system manufacturer's written instructions for accurate proportioning of materials, water (if required), type of mixing equipment, selection of mixer speeds, mixing containers, mixing time, and other items or procedures needed to produce products of uniform quality with optimum performance characteristics for application indicated.

PART 3 - EXECUTION

3.1 EXAMINATION

A. Examine substrates and conditions, with Installer present, for compliance with requirements for opening configurations, penetrating items, substrates, and other conditions affecting performance of the Work.

B. Proceed with installation only after unsatisfactory conditions have been corrected.

3.2 PREPARATION

A. Surface Cleaning: Before installing penetration firestopping systems, clean out openings immediately to comply with manufacturer's written instructions and with the following requirements:

1. Remove from surfaces of opening substrates and from penetrating items foreign materials that could interfere with adhesion of penetration firestopping materials.
2. Clean opening substrates and penetrating items to produce clean, sound surfaces capable of developing optimum bond with penetration firestopping materials. Remove loose particles remaining from cleaning operation.
3. Remove laitance and form-release agents from concrete.

B. Prime substrates where recommended in writing by manufacturer using that manufacturer's recommended products and methods. Confine primers to areas of bond; do not allow spillage and migration onto exposed surfaces.

3.3 INSTALLATION

A. General: Install penetration firestopping systems to comply with manufacturer's written installation instructions and published drawings for products and applications.

B. Install forming materials and other accessories of types required to support fill materials during their application and in the position needed to produce cross-sectional shapes and depths required to achieve fire ratings.

Copyright © 2025 by the American Institute of Architects. Warning: This AIA MasterSpec-based document is protected by U.S. Copyright Law and International Treaties. It was created by "Michael Shilale Architects, LLP" for "Renovation of Rockland Green Administrative Headquarters and Construction of an Immersive Theatre Experience". A valid, current MasterSpec license is required for editing and use of this document for any other project.(22360)

1. After installing fill materials and allowing them to fully cure, remove combustible forming materials and other accessories not forming permanent components of firestopping.

C. Install fill materials by proven techniques to produce the following results:

1. Fill voids and cavities formed by openings, forming materials, accessories and penetrating items to achieve required fire-resistance ratings.
2. Apply materials so they contact and adhere to substrates formed by openings and penetrating items.
3. For fill materials that will remain exposed after completing the Work, finish to produce smooth, uniform surfaces that are flush with adjoining finishes.

3.4 IDENTIFICATION

A. Wall Identification: Permanently label walls containing penetration firestopping systems with the words "FIRE AND/OR SMOKE BARRIER - PROTECT ALL OPENINGS," using lettering not less than 3 inches high and with minimum 0.375-inch strokes.

1. Locate in accessible concealed floor, floor-ceiling, or attic space at 15 feet from end of wall and at intervals not exceeding 30 feet.

B. Penetration Identification: Identify each penetration firestopping system with legible metal or plastic labels. Attach labels permanently to surfaces adjacent to and within 6 inches of penetration firestopping system edge so labels are visible to anyone seeking to remove penetrating items or firestopping systems. Use mechanical fasteners or self-adhering-type labels with adhesives capable of permanently bonding labels to surfaces on which labels are placed. Include the following information on labels:

1. The words "Warning - Penetration Firestopping - Do Not Disturb. Notify Building Management of Any Damage."
2. Contractor's name, address, and phone number.
3. Designation of applicable testing and inspecting agency.
4. Date of installation.
5. Manufacturer's name.
6. Installer's name.

3.5 FIELD QUALITY CONTROL

A. Owner will engage a qualified testing agency to perform tests and inspections according to ASTM E 2174.

B. Where deficiencies are found or penetration firestopping system is damaged or removed because of testing, repair or replace penetration firestopping system to comply with requirements.

C. Proceed with enclosing penetration firestopping systems with other construction only after inspection reports are issued and installations comply with requirements.

Copyright © 2025 by the American Institute of Architects. Warning: This AIA MasterSpec-based document is protected by U.S. Copyright Law and International Treaties. It was created by "Michael Shilale Architects, LLP" for "Renovation of Rockland Green Administrative Headquarters and Construction of an Immersive Theatre Experience". A valid, current MasterSpec license is required for editing and use of this document for any other project.(22360)

3.6 CLEANING AND PROTECTION

A. Clean off excess fill materials adjacent to openings as the Work progresses by methods and with cleaning materials that are approved in writing by penetration firestopping system manufacturers and that do not damage materials in which openings occur.

B. Provide final protection and maintain conditions during and after installation that ensure that penetration firestopping systems are without damage or deterioration at time of Substantial Completion. If, despite such protection, damage or deterioration occurs, immediately cut out and remove damaged or deteriorated penetration firestopping material and install new materials to produce systems complying with specified requirements.

END OF SECTION 078413

Copyright © 2025 by the American Institute of Architects. Warning: This AIA MasterSpec-based document is protected by U.S. Copyright Law and International Treaties. It was created by "Michael Shilale Architects, LLP" for "Renovation of Rockland Green Administrative Headquarters and Construction of an Immersive Theatre Experience". A valid, current MasterSpec license is required for editing and use of this document for any other project.(22360)

SECTION 078443 - JOINT FIRESTOPPING

PART 1 - GENERAL

1.1 RELATED DOCUMENTS

A. Drawings and general provisions of the Contract, including General and Supplementary Conditions and Division 01 Specification Sections, apply to this Section.

1.2 SUMMARY

A. Section Includes:

1. Joints in or between fire-resistance-rated constructions.
2. Joints in smoke barriers.

1.3 PREINSTALLATION MEETINGS

A. Preinstallation Conference: Conduct conference at Project site .

1.4 ACTION SUBMITTALS

A. Product Data: For each type of product.

B. Product Schedule: For each joint firestopping system. Include location, illustration of firestopping system, and design designation of qualified testing agency.

1.5 INFORMATIONAL SUBMITTALS

A. Qualification Data: For Installer.

B. Product Test Reports: For each joint firestopping system, for tests performed by a qualified testing agency.

1.6 CLOSEOUT SUBMITTALS

A. Installer Certificates: From Installer indicating that joint firestopping systems have been installed in compliance with requirements and manufacturer's written instructions.

Copyright © 2025 by the American Institute of Architects. Warning: This AIA MasterSpec-based document is protected by U.S. Copyright Law and International Treaties. It was created by "Michael Shilale Architects, LLP" for "Renovation of Rockland Green Administrative Headquarters and Construction of an Immersive Theatre Experience". A valid, current MasterSpec license is required for editing and use of this document for any other project.(22360)

1.7 QUALITY ASSURANCE

A. Installer Qualifications: A firm that has been approved by FM Global according to FM Global 4991, "Approval of Firestop Contractors," or been evaluated by UL and found to comply with UL's "Qualified Firestop Contractor Program Requirements."

1.8 PROJECT CONDITIONS

A. Environmental Limitations: Do not install joint firestopping systems when ambient or substrate temperatures are outside limits permitted by joint firestopping system manufacturers or when substrates are wet due to rain, frost, condensation, or other causes.

B. Install and cure joint firestopping systems per manufacturer's written instructions using natural means of ventilation or, where this is inadequate, forced-air circulation.

1.9 COORDINATION

A. Coordinate construction of joints to ensure that joint firestopping systems can be installed according to specified firestopping system design.

B. Coordinate sizing of joints to accommodate joint firestopping systems.

PART 2 - PRODUCTS

2.1 PERFORMANCE REQUIREMENTS

A. Fire-Test-Response Characteristics:

1. Perform joint firestopping system tests by a qualified testing agency acceptable to authorities having jurisdiction.
2. Test per testing standards referenced in "Joint Firestopping Systems" Article. Provide rated systems complying with the following requirements:
   a. Joint firestopping systems shall bear classification marking of a qualified testing agency.
      1) UL in its "Fire Resistance Directory."
      2) Intertek Group in its "Directory of Listed Building Products."

2.2 JOINT FIRESTOPPING SYSTEMS

A. Joint Firestopping Systems: Systems that resist spread of fire, passage of smoke and other gases, and maintain original fire-resistance rating of assemblies in or between which joint firestopping systems are installed. Joint firestopping systems shall accommodate building movements without impairing their ability to resist the passage of fire and hot gases.

Copyright © 2025 by the American Institute of Architects. Warning: This AIA MasterSpec-based document is protected by U.S. Copyright Law and International Treaties. It was created by "Michael Shilale Architects, LLP" for "Renovation of Rockland Green Administrative Headquarters and Construction of an Immersive Theatre Experience". A valid, current MasterSpec license is required for editing and use of this document for any other project.(22360)

B. Joints in or between Fire-Resistance-Rated Construction: Provide joint firestopping systems with ratings determined per ASTM E 1966 or UL 2079.

1. Fire-Resistance Rating: Equal to or exceeding the fire-resistance rating of the wall, floor, or roof in or between which it is installed.

C. Joints in Smoke Barriers: Provide fire-resistive joint systems with ratings determined per UL 2079 based on testing at a positive pressure differential of 0.30-inch wg.

1. L-Rating: Not exceeding 5.0 cfm/ft. of joint at both ambient and elevated temperatures.

D. Exposed Joint Firestopping Systems: Flame-spread and smoke-developed indexes of less than 25 and 450, respectively, as determined per ASTM E 84.

E. Accessories: Provide components of fire-resistive joint systems, including primers and forming materials, that are needed to install elastomeric fill materials and to maintain ratings required. Use only components specified by joint firestopping system manufacturer and approved by the qualified testing agency for conditions indicated.

PART 3 - EXECUTION

3.1 EXAMINATION

A. Examine substrates and conditions, with Installer present, for compliance with requirements for joint configurations, substrates, and other conditions affecting performance of the Work.

B. Proceed with installation only after unsatisfactory conditions have been corrected.

3.2 PREPARATION

A. Surface Cleaning: Before installing fire-resistive joint systems, clean joints immediately to comply with fire-resistive joint system manufacturer's written instructions and the following requirements:

1. Remove from surfaces of joint substrates foreign materials that could interfere with adhesion of elastomeric fill materials or compromise fire-resistive rating.
2. Clean joint substrates to produce clean, sound surfaces capable of developing optimum bond with elastomeric fill materials. Remove loose particles remaining from cleaning operation.
3. Remove laitance and form-release agents from concrete.

B. Prime substrates where recommended in writing by joint firestopping system manufacturer using that manufacturer's recommended products and methods. Confine primers to areas of bond; do not allow spillage and migration onto exposed surfaces.

Copyright © 2025 by the American Institute of Architects. Warning: This AIA MasterSpec-based document is protected by U.S. Copyright Law and International Treaties. It was created by "Michael Shilale Architects, LLP" for "Renovation of Rockland Green Administrative Headquarters and Construction of an Immersive Theatre Experience". A valid, current MasterSpec license is required for editing and use of this document for any other project.(22360)

3.3 INSTALLATION

A. General: Install fire-resistive joint systems to comply with manufacturer's written installation instructions and published drawings for products and applications indicated.

B. Install forming materials and other accessories of types required to support elastomeric fill materials during their application and in position needed to produce cross-sectional shapes and depths required to achieve fire ratings indicated.

1. After installing elastomeric fill materials and allowing them to fully cure, remove combustible forming materials and other accessories not indicated as permanent components of fire-resistive joint system.

C. Install elastomeric fill materials for fire-resistive joint systems by proven techniques to produce the following results:

1. Elastomeric fill voids and cavities formed by joints and forming materials as required to achieve fire-resistance ratings indicated.
2. Apply elastomeric fill materials so they contact and adhere to substrates formed by joints.
3. For elastomeric fill materials that will remain exposed after completing the Work, finish to produce smooth, uniform surfaces that are flush with adjoining finishes.

3.4 IDENTIFICATION

A. Joint Identification: Identify joint firestopping systems with legible metal or plastic labels. Attach labels permanently to surfaces adjacent to and within 6 inches of joint edge so labels are visible to anyone seeking to remove or joint firestopping system. Use mechanical fasteners or self-adhering-type labels with adhesives capable of permanently bonding labels to surfaces on which labels are placed. Include the following information on labels:

1. The words "Warning - Joint Firestopping - Do Not Disturb. Notify Building Management of Any Damage."
2. Contractor's name, address, and phone number.
3. Designation of applicable testing agency.
4. Date of installation.
5. Manufacturer's name.
6. Installer's name.

3.5 FIELD QUALITY CONTROL

A. Inspecting Agency: Owner will engage a qualified testing agency to perform tests and inspections according to ASTM E 2393.

B. Where deficiencies are found or joint firestopping systems are damaged or removed due to testing, repair or replace joint firestopping systems so they comply with requirements.

C. Proceed with enclosing joint firestopping systems with other construction only after inspection reports are issued and installations comply with requirements.

Copyright © 2025 by the American Institute of Architects. Warning: This AIA MasterSpec-based document is protected by U.S. Copyright Law and International Treaties. It was created by "Michael Shilale Architects, LLP" for "Renovation of Rockland Green Administrative Headquarters and Construction of an Immersive Theatre Experience". A valid, current MasterSpec license is required for editing and use of this document for any other project.(22360)

3.6 CLEANING AND PROTECTION

A. Clean off excess elastomeric fill materials adjacent to joints as the Work progresses by methods and with cleaning materials that are approved in writing by joint firestopping system manufacturers and that do not damage materials in which joints occur.

B. Provide final protection and maintain conditions during and after installation that ensure joint firestopping systems are without damage or deterioration at time of Substantial Completion. If damage or deterioration occurs despite such protection, cut out and remove damaged or deteriorated fire-resistive joint systems immediately and install new materials to produce fire-resistive joint systems complying with specified requirements.

END OF SECTION 078443

Copyright © 2025 by the American Institute of Architects. Warning: This AIA MasterSpec-based document is protected by U.S. Copyright Law and International Treaties. It was created by "Michael Shilale Architects, LLP" for "Renovation of Rockland Green Administrative Headquarters and Construction of an Immersive Theatre Experience". A valid, current MasterSpec license is required for editing and use of this document for any other project.(22360)

SECTION 079200 - JOINT SEALANTS

PART 1 - GENERAL

1.1 SUMMARY

A. Section Includes:

1. Nonstaining silicone joint sealants.
2. Urethane joint sealants.
3. Mildew-resistant joint sealants.
4. Polysulfide joint sealants.

1.2 PREINSTALLATION MEETINGS

A. Preinstallation Conference: Conduct conference at Project site .

1.3 ACTION SUBMITTALS

A. Product Data:

1. Nonstaining silicone joint sealants.
2. Urethane joint sealants.
3. Mildew-resistant joint sealants.
4. Polysulfide joint sealants.

B. Samples for Initial Selection: Manufacturer's standard color charts consisting of strips of cured sealants showing the full range of colors available for each product exposed to view.

1.4 INFORMATIONAL SUBMITTALS

A. Field Quality-Control Reports: For field-adhesion-test reports, for each sealant application tested.

B. Sample warranties.

Copyright © 2025 by the American Institute of Architects. Warning: This AIA MasterSpec-based document is protected by U.S. Copyright Law and International Treaties. It was created by "Michael Shilale Architects, LLP" for "Renovation of Rockland Green Administrative Headquarters and Construction of an Immersive Theatre Experience". A valid, current MasterSpec license is required for editing and use of this document for any other project.(22360)

1.5 CLOSEOUT SUBMITTALS

1.6 QUALITY ASSURANCE

1.7 MOCKUPS

A. Install sealant in mockups of assemblies specified in other Sections that are indicated to receive joint sealants specified in this Section. Use materials and installation methods specified in this Section.

1.8 FIELD CONDITIONS

A. Do not proceed with installation of joint sealants under the following conditions:

1. When ambient and substrate temperature conditions are outside limits permitted by joint-sealant manufacturer or are below 40 deg F.
2. When joint substrates are wet.
3. Where joint widths are less than those allowed by joint-sealant manufacturer for applications indicated.
4. Where contaminants capable of interfering with adhesion have not yet been removed from joint substrates.

1.9 WARRANTY

A. Special Manufacturer's Warranty: Manufacturer agrees to furnish joint sealants to repair or replace those joint sealants that do not comply with performance and other requirements specified in this Section within specified warranty period.

1. Warranty Period: Five years from date of Substantial Completion.

B. Special warranties specified in this article exclude deterioration or failure of joint sealants from the following:

1. Movement of the structure caused by stresses on the sealant exceeding sealant manufacturer's written specifications for sealant elongation and compression.
2. Disintegration of joint substrates from causes exceeding design specifications.
3. Mechanical damage caused by individuals, tools, or other outside agents.
4. Changes in sealant appearance caused by accumulation of dirt or other atmospheric contaminants.

PART 2 - PRODUCTS

2.1 SOURCE LIMITATIONS

A. Obtain joint sealants from single manufacturer.

Copyright © 2025 by the American Institute of Architects. Warning: This AIA MasterSpec-based document is protected by U.S. Copyright Law and International Treaties. It was created by "Michael Shilale Architects, LLP" for "Renovation of Rockland Green Administrative Headquarters and Construction of an Immersive Theatre Experience". A valid, current MasterSpec license is required for editing and use of this document for any other project.(22360)

2.2 JOINT SEALANTS, GENERAL

A. Compatibility: Provide joint sealants, backings, and other related materials that are compatible with one another and with joint substrates under conditions of service and application, as demonstrated by joint-sealant manufacturer, based on testing and field experience.

B. Colors of Exposed Joint Sealants: As selected by Architect from manufacturer's full range.

2.3 NONSTAINING SILICONE JOINT SEALANTS

A. Nonstaining Joint Sealants: No staining of substrates when tested in accordance with ASTM C1248.

B. Silicone, Nonstaining, S, NS, 100/50, T, NT: Nonstaining, single-component, nonsag, plus 100 percent and minus 50 percent movement capability, traffic- and nontraffic-use, neutral-curing silicone joint sealant; ASTM C920, Type S, Grade NS, Class 100/50, Uses T and NT.

2.4 URETHANE JOINT SEALANTS

A. Urethane, S, NS, 100/50, T, NT: Single-component, nonsag, plus 100 percent and minus 50 percent movement capability, traffic- and nontraffic-use, urethane joint sealant; ASTM C920, Type S, Grade NS, Class 100/50, Uses T and NT.

B. Urethane, S, P, 25, T, NT: Single-component, pourable, plus 25 percent and minus 25 percent movement capability, traffic- and nontraffic-use, urethane joint sealant; ASTM C920, Type S, Grade P, Class 25, Uses T and NT.

2.5 MILDEW-RESISTANT JOINT SEALANTS

A. Mildew-Resistant Joint Sealants: Formulated for prolonged exposure to humidity with fungicide to prevent mold and mildew growth.

B. Silicone, Mildew Resistant, Acid Curing, S, NS, 25, NT: Mildew-resistant, single-component, nonsag, plus 25 percent and minus 25 percent movement capability, nontraffic-use, acid-curing silicone joint sealant; ASTM C920, Type S, Grade NS, Class 25, Use NT.

2.6 POLYSULFIDE JOINT SEALANTS

A. Polysulfide, M, NS, 25, T, NT: Multicomponent, nonsag, plus 25 percent and minus 25 percent movement capability, nontraffic-use, polysulfide joint sealant; ASTM C920, Type M, Grade NS, Class 25, Use NT.

B. Polysulfide, M, P, 25, T, NT: Multicomponent, pourable, plus 25 percent and minus 25 percent movement capability, traffic- and nontraffic-use, polysulfide joint sealant; ASTM C920, Type M, Grade P, Class 25, Uses T and NT.

Copyright © 2025 by the American Institute of Architects. Warning: This AIA MasterSpec-based document is protected by U.S. Copyright Law and International Treaties. It was created by "Michael Shilale Architects, LLP" for "Renovation of Rockland Green Administrative Headquarters and Construction of an Immersive Theatre Experience". A valid, current MasterSpec license is required for editing and use of this document for any other project.(22360)

PART 3 - EXECUTION

3.1 EXAMINATION

A. Examine joints indicated to receive joint sealants, with Installer present, for compliance with requirements for joint configuration, installation tolerances, and other conditions affecting performance of the Work.

B. Proceed with installation only after unsatisfactory conditions have been corrected.

3.2 PREPARATION

A. Surface Cleaning of Joints: Clean out joints immediately before installing joint sealants to comply with joint-sealant manufacturer's written instructions and the following requirements:

1. Remove all foreign material from joint substrates that could interfere with adhesion of joint sealant, including dust, paints (except for permanent, protective coatings tested and approved for sealant adhesion and compatibility by sealant manufacturer), old joint sealants, oil, grease, waterproofing, water repellents, water, surface dirt, and frost.
2. Clean porous joint substrate surfaces by brushing, grinding, mechanical abrading, or a combination of these methods to produce a clean, sound substrate capable of developing optimum bond with joint sealants. Remove loose particles remaining after cleaning operations above by vacuuming or blowing out joints with oil-free compressed air. Porous joint substrates include the following:
   a. Concrete.
   b. Masonry.
3. Remove laitance and form-release agents from concrete.
4. Clean nonporous joint substrate surfaces with chemical cleaners or other means that do not stain, harm substrates, or leave residues capable of interfering with adhesion of joint sealants. Nonporous joint substrates include the following:
   a. Metal.
   b. Glass.

3.3 INSTALLATION OF JOINT SEALANTS

A. General: Comply with joint-sealant manufacturer's written installation instructions for products and applications indicated, unless more stringent requirements apply.

B. Sealant Installation Standard: Comply with recommendations in ASTM C1193 for use of joint sealants as applicable to materials, applications, and conditions indicated.

C. Install sealant backings of type indicated to support sealants during application and at position required to produce cross-sectional shapes and depths of installed sealants relative to joint widths that allow optimum sealant movement capability.

1. Do not leave gaps between ends of sealant backings.
2. Do not stretch, twist, puncture, or tear sealant backings.

Copyright © 2025 by the American Institute of Architects. Warning: This AIA MasterSpec-based document is protected by U.S. Copyright Law and International Treaties. It was created by "Michael Shilale Architects, LLP" for "Renovation of Rockland Green Administrative Headquarters and Construction of an Immersive Theatre Experience". A valid, current MasterSpec license is required for editing and use of this document for any other project.(22360)

3. Remove absorbent sealant backings that have become wet before sealant application, and replace them with dry materials.

D. Install bond-breaker tape behind sealants where sealant backings are not used between sealants and backs of joints.

E. Install sealants using proven techniques that comply with the following and at the same time backings are installed:

1. Place sealants so they directly contact and fully wet joint substrates.
2. Completely fill recesses in each joint configuration.
3. Produce uniform, cross-sectional shapes and depths relative to joint widths that allow optimum sealant movement capability.

F. Tooling of Nonsag Sealants: Immediately after sealant application and before skinning or curing begins, tool sealants in accordance with requirements specified in subparagraphs below to form smooth, uniform beads of configuration indicated; to eliminate air pockets; and to ensure contact and adhesion of sealant with sides of joint.

1. Remove excess sealant from surfaces adjacent to joints.
2. Use tooling agents that are approved in writing by sealant manufacturer and that do not discolor sealants or adjacent surfaces.
3. Provide concave joint profile in accordance with Figure 8A in ASTM C1193 unless otherwise indicated.
4. Provide flush joint profile at locations indicated on Drawings in accordance with Figure 8B in ASTM C1193.
5. Provide recessed joint configuration of recess depth and at locations indicated on Drawings in accordance with Figure 8C in ASTM C1193.
   a. Use masking tape to protect surfaces adjacent to recessed tooled joints.

3.4 FIELD QUALITY CONTROL

A. Testing Agency: Owner will engage a qualified testing agency to perform tests and inspections.

B. Tests and Inspections:

1. Field-Adhesion Testing: Field test joint-sealant adhesion to joint substrates as follows:
   a. Extent of Testing: Test completed and cured sealant joints as follows:
      1) Perform 10 tests for the first 1000 ft. of joint length for each kind of sealant and joint substrate.
      2) Perform one test for each 1000 ft. of joint length thereafter or one test per each floor per elevation.
   b. Test Method: Test joint sealants in accordance with Method A, Tail Procedure, in ASTM C1521.
      1) For joints with dissimilar substrates, verify adhesion to each substrate separately; extend cut along one side, verifying adhesion to opposite side. Repeat procedure for opposite side.
   c. Inspect tested joints and report on the following:
      1) Whether sealants filled joint cavities and are free of voids.

Copyright © 2025 by the American Institute of Architects. Warning: This AIA MasterSpec-based document is protected by U.S. Copyright Law and International Treaties. It was created by "Michael Shilale Architects, LLP" for "Renovation of Rockland Green Administrative Headquarters and Construction of an Immersive Theatre Experience". A valid, current MasterSpec license is required for editing and use of this document for any other project.(22360)

2) Whether sealant dimensions and configurations comply with specified requirements.
3) Whether sealants in joints connected to pulled-out portion failed to adhere to joint substrates or tore cohesively. Include data on pull distance used to test each kind of product and joint substrate. Compare these results to determine if adhesion complies with sealant manufacturer's field-adhesion hand-pull test criteria.

d. Record test results in a field-adhesion-test log. Include dates when sealants were installed, names of persons who installed sealants, test dates, test locations, whether joints were primed, adhesion results and percent elongations, sealant material, sealant configuration, and sealant dimensions.

e. Repair sealants pulled from test area by applying new sealants following same procedures used originally to seal joints. Ensure that original sealant surfaces are clean and that new sealant contacts original sealant.

2. Evaluation of Field-Adhesion-Test Results: Sealants not evidencing adhesive failure from testing or noncompliance with other indicated requirements will be considered satisfactory. Remove sealants that fail to adhere to joint substrates during testing or to comply with other requirements. Retest failed applications until test results prove sealants comply with indicated requirements.

C. Prepare test and inspection reports.

3.5 CLEANING

A. Clean off excess sealant or sealant smears adjacent to joints as the Work progresses by methods and with cleaning materials approved in writing by manufacturers of joint sealants and of products in which joints occur.

3.6 PROTECTION

A. Protect joint sealants during and after curing period from contact with contaminating substances and from damage resulting from construction operations or other causes so sealants are without deterioration or damage at time of Substantial Completion. If, despite such protection, damage or deterioration occurs, cut out, remove, and repair damaged or deteriorated joint sealants immediately so installations with repaired areas are indistinguishable from original work.

END OF SECTION 079200

Copyright © 2025 by the American Institute of Architects. Warning: This AIA MasterSpec-based document is protected by U.S. Copyright Law and International Treaties. It was created by "Michael Shilale Architects, LLP" for "Renovation of Rockland Green Administrative Headquarters and Construction of an Immersive Theatre Experience". A valid, current MasterSpec license is required for editing and use of this document for any other project.(22360)

SECTION 081416 - FLUSH WOOD DOORS

PART 1 - GENERAL

1.1 RELATED DOCUMENTS

A. Drawings and general provisions of the Contract, including General and Supplementary Conditions and Division 01 Specification Sections, apply to this Section.

1.2 SUMMARY

A. Section Includes:

1. Solid-core doors with wood-veneer faces.
2. Factory finishing flush wood doors.
3. Factory fitting flush wood doors to frames and factory machining for hardware.

B. Related Requirements:

1. Section 099123 "Interior Painting" for field finishing doors.

1.3 PREINSTALLATION MEETINGS

A. Preinstallation Conference: Conduct conference at Project site .

1.4 ACTION SUBMITTALS

A. Product Data: For each type of door. Include details of core and edge construction and trim for openings. Include factory-finishing specifications.

B. Shop Drawings: Indicate location, size, and hand of each door; elevation of each kind of door; construction details not covered in Product Data; and the following:

1. Dimensions and locations of blocking.
2. Dimensions and locations of mortises and holes for hardware.
3. Dimensions and locations of cutouts.
4. Undercuts.
5. Requirements for veneer matching.
6. Doors to be factory finished and finish requirements.
7. Fire-protection ratings for fire-rated doors.

C. Samples for Initial Selection: For factory-finished doors.

Copyright © 2025 by the American Institute of Architects. Warning: This AIA MasterSpec-based document is protected by U.S. Copyright Law and International Treaties. It was created by "Michael Shilale Architects, LLP" for "Renovation of Rockland Green Administrative Headquarters and Construction of an Immersive Theatre Experience". A valid, current MasterSpec license is required for editing and use of this document for any other project.(22360)

1.5 INFORMATIONAL SUBMITTALS

A. Sample Warranty: For special warranty.

1.6 DELIVERY, STORAGE, AND HANDLING

A. Comply with requirements of referenced standard and manufacturer's written instructions.

B. Package doors individually in cardboard cartons and wrap bundles of doors in plastic sheeting.

C. Mark each door on top and bottom rail with opening number used on Shop Drawings.

1.7 FIELD CONDITIONS

A. Environmental Limitations: Do not deliver or install doors until spaces are enclosed and weathertight, wet work in spaces is complete and dry, and HVAC system is operating and maintaining ambient temperature and humidity conditions at occupancy levels during remainder of construction period.

B. Environmental Limitations: Do not deliver or install doors until spaces are enclosed and weathertight, wet work in spaces is complete and dry, and HVAC system is operating and maintaining temperature between 60 and 90 deg F and relative humidity between 25 and 55 percent during remainder of construction period.

1.8 WARRANTY

A. A. Special Warranty: Manufacturer agrees to repair or replace doors that fail in materials or workmanship within specified warranty period.

1. Failures include, but are not limited to, the following:
   a. Warping (bow, cup, or twist) more than 1/4 inch in a 42-by-84-inch section.
   b. Telegraphing of core construction in face veneers exceeding 0.01 inch in a 3-inch span.
2. Warranty shall also include installation and finishing that may be required due to repair or replacement of defective doors.
3. Warranty Period for Solid-Core Exterior Doors: Five years from date of Substantial Completion.
4. Warranty Period for Solid-Core Interior Doors: Life of installation.

PART 2 - PRODUCTS

2.1 MANUFACTURERS

A. Manufacturers: Subject to compliance with requirements, provide products by one of the following:

Copyright © 2025 by the American Institute of Architects. Warning: This AIA MasterSpec-based document is protected by U.S. Copyright Law and International Treaties. It was created by "Michael Shilale Architects, LLP" for "Renovation of Rockland Green Administrative Headquarters and Construction of an Immersive Theatre Experience". A valid, current MasterSpec license is required for editing and use of this document for any other project.(22360)

1. Chappell Door Co.
2. Haley Brothers, Inc.
3. Mohawk Flush Doors, Inc.

B. Source Limitations: Obtain flush wood doors from single manufacturer.

2.2 FLUSH WOOD DOORS, GENERAL

A. Quality Standard: In addition to requirements specified, comply with WDMA I.S.1-A, "Architectural Wood Flush Doors."

1. Provide AWI Quality Certification Labels indicating that doors comply with requirements of grades specified.
2. Contract Documents contain selections chosen from options in quality standard and additional requirements beyond those of quality standard. Comply with those selections and requirements in addition to quality standard.

B. Fire-Rated Wood Doors: Doors complying with NFPA 80 that are listed and labeled by a qualified testing agency, for fire-protection ratings indicated, based on testing at positive pressure according to NFPA 252 or UL 10C.

1. Temperature-Rise Limit: At vertical exit enclosures and exit passageways, provide doors that have a maximum transmitted temperature end point of not more than 450 deg F (250 deg C) above ambient after 30 minutes of standard fire-test exposure.
2. Cores: Provide core specified or mineral core as needed to provide fire-protection rating indicated.
3. Edge Construction: Provide edge construction with intumescent seals concealed by outer stile. Comply with specified requirements for exposed edges.
4. Pairs: Provide fire-retardant stiles that are listed and labeled for applications indicated without formed-steel edges and astragals. Provide stiles with concealed intumescent seals. Comply with specified requirements for exposed edges.
5. Pairs: Provide formed-steel edges and astragals with intumescent seals.
   a. Finish steel edges and astragals with baked enamel same color as doors.
   b. Finish steel edges and astragals to match door hardware (locksets or exit devices).

C. Smoke- and Draft-Control Door Assemblies: Listed and labeled for smoke and draft control, based on testing according to UL 1784.

D. Structural-Composite-Lumber-Core Doors:

1. Structural Composite Lumber: WDMA I.S.10.
   a. Screw Withdrawal, Face: 700 lbf.
   b. Screw Withdrawal, Edge: 400 lbf.

2.3 VENEER-FACED DOORS FOR TRANSPARENT FINISH

A. Interior Solid-Core Doors :

Copyright © 2025 by the American Institute of Architects. Warning: This AIA MasterSpec-based document is protected by U.S. Copyright Law and International Treaties. It was created by "Michael Shilale Architects, LLP" for "Renovation of Rockland Green Administrative Headquarters and Construction of an Immersive Theatre Experience". A valid, current MasterSpec license is required for editing and use of this document for any other project.(22360)

1. Grade: Premium, with Grade AA faces .
2. Species: White oak .
3. Cut: Rotary cut .
4. Match between Veneer Leaves: Slip match.
5. Assembly of Veneer Leaves on Door Faces: Center-balance match.
6. Pair and Set Match: Provide for doors hung in same opening or separated only by mullions.
7. Room Match: Match door faces within each separate room or area of building. Corridor-door faces do not need to match where they are separated by 10 feet or more.
8. Room Match: Provide door faces of compatible color and grain within each separate room or area of building.
9. Exposed Vertical Edges: Applied wood-veneer edges of same species as faces and covering edges of faces - edge Type B .
10. Core: Either glued wood stave or structural composite lumber .
11. Construction: Five or seven plies. Stiles and rails are bonded to core, then entire unit is abrasive planed before veneering. Faces are bonded to core using a hot press.

2.4 DOORS FOR OPAQUE FINISH

2.5 PLASTIC-LAMINATE-FACED DOORS

2.6 LIGHT FRAMES AND LOUVERS

2.7 FABRICATION

A. Factory fit doors to suit frame-opening sizes indicated. Comply with clearance requirements of referenced quality standard for fitting unless otherwise indicated.

1. Comply with NFPA 80 requirements for fire-rated doors.

B. Transom and Side Panels: Fabricate matching panels with same construction, exposed surfaces, and finish as specified for associated doors. Finish bottom edges of transoms and top edges of rabbeted doors same as door stiles.

1. Fabricate door and transom panels with full-width, solid-lumber , rabbeted, meeting rails. Provide factory-installed spring bolts for concealed attachment into jambs of metal door frames.

C. Openings: Factory cut and trim openings through doors.

1. Light Openings: Trim openings with moldings of material and profile indicated.
2. Glazing: Factory install glazing in doors indicated to be factory finished. Comply with applicable requirements in Section 088000 "Glazing."
3. Louvers: Factory install louvers in prepared openings.

Copyright © 2025 by the American Institute of Architects. Warning: This AIA MasterSpec-based document is protected by U.S. Copyright Law and International Treaties. It was created by "Michael Shilale Architects, LLP" for "Renovation of Rockland Green Administrative Headquarters and Construction of an Immersive Theatre Experience". A valid, current MasterSpec license is required for editing and use of this document for any other project.(22360)

2.8 FACTORY FINISHING

A. General: Comply with referenced quality standard for factory finishing. Complete fabrication, including fitting doors for openings and machining for hardware that is not surface applied, before finishing.

1. Finish faces, all four edges, edges of cutouts, and mortises. Stains and fillers may be omitted on top and bottom edges, edges of cutouts, and mortises.

B. Factory finish doors.

C. Factory finish doors that are indicated to receive transparent finish.

D. Factory finish doors where indicated in schedules or on Drawings as factory finished.

E. Transparent Finish:

1. Grade: Premium .
2. Finish: AWI's, AWMAC's, and WI's "Architectural Woodwork Standards" System 9, UV curable, acrylated epoxy, polyester, or urethane or System 11, catalyzed polyurethane .
3. Staining: As selected by Architect from manufacturer's full range .
4. Effect: Semifilled finish, produced by applying an additional finish coat to partially fill the wood pores.
5. Sheen: Satin .

F. Opaque Finish:

1. Grade: Premium .
2. Finish: AWI's, AWMAC's, and WI's "Architectural Woodwork Standards" System 9, UV curable, acrylated epoxy, polyester, or urethane or System 11, catalyzed polyurethane .
3. Color: As selected by Architect from manufacturer's full range.
4. Sheen: Satin orSemigloss to be selected by owner.

PART 3 - EXECUTION

3.1 EXAMINATION

A. Examine doors and installed door frames, with Installer present, before hanging doors.

1. Verify that installed frames comply with indicated requirements for type, size, location, and swing characteristics and have been installed with level heads and plumb jambs.
2. Reject doors with defects.

B. Proceed with installation only after unsatisfactory conditions have been corrected.

Copyright © 2025 by the American Institute of Architects. Warning: This AIA MasterSpec-based document is protected by U.S. Copyright Law and International Treaties. It was created by "Michael Shilale Architects, LLP" for "Renovation of Rockland Green Administrative Headquarters and Construction of an Immersive Theatre Experience". A valid, current MasterSpec license is required for editing and use of this document for any other project.(22360)

3.2 INSTALLATION

A. Hardware: For installation, see Section 087100 "Door Hardware."

B. Installation Instructions: Install doors to comply with manufacturer's written instructions and referenced quality standard, and as indicated.

1. Install fire-rated doors according to NFPA 80.
2. Install smoke- and draft-control doors according to NFPA 105.

C. Job-Fitted Doors: Align and fit doors in frames with uniform clearances and bevels as indicated below; do not trim stiles and rails in excess of limits set by manufacturer or permitted for fire-rated doors. Machine doors for hardware. Seal edges of doors, edges of cutouts, and mortises after fitting and machining.

1. Clearances: Provide 1/8 inch at heads, jambs, and between pairs of doors. Provide 1/8 inch from bottom of door to top of decorative floor finish or covering unless otherwise indicated. Where threshold is shown or scheduled, provide1/4 inch from bottom of door to top of threshold unless otherwise indicated.
   a. Comply with NFPA 80 for fire-rated doors.
   b. Bevel non-fire-rated doors 1/8 inch in 2 inches at lock and hinge edges.
2. Bevel fire-rated doors 1/8 inch in 2 inches at lock edge; trim stiles and rails only to extent permitted by labeling agency.

D. Factory-Fitted Doors: Align in frames for uniform clearance at each edge.

E. Factory-Finished Doors: Restore finish before installation if fitting or machining is required at Project site.

3.3 ADJUSTING

A. Operation: Rehang or replace doors that do not swing or operate freely.

B. Finished Doors: Replace doors that are damaged or that do not comply with requirements. Doors may be repaired or refinished if Work complies with requirements and shows no evidence of repair or refinishing.

END OF SECTION 081416

Copyright © 2025 by the American Institute of Architects. Warning: This AIA MasterSpec-based document is protected by U.S. Copyright Law and International Treaties. It was created by "Michael Shilale Architects, LLP" for "Renovation of Rockland Green Administrative Headquarters and Construction of an Immersive Theatre Experience". A valid, current MasterSpec license is required for editing and use of this document for any other project.(22360)

SECTION 081613 – FIBERGLASS REINFORCED POLYESTER (FRP) DOORS

PART 1 - GENERAL

1.1 RELATED DOCUMENTS

A. Drawings and general provisions of the Contract, including General and Supplementary Conditions and Division 01 Specification Sections, apply to this Section.

1.2 SUMMARY

A. Section Includes:

1. Fiberglass reinforced polyester doors.

B. Related Sections:

1. Division 08 Section "Glazing" for glass view panels in doors.
2. Division 08 Sections "Door Hardware" and "Access Control Hardware" for door hardware.

C. Codes and References: Comply with the version year adopted by the Authority Having Jurisdiction.

1. ANSI/BHMA A156.115 - Hardware Preparation in Steel Doors and Frames.
2. ASTM C 1363 - Standard Test Method for Thermal Performance of Building Assemblies by Means of a Hot Box Apparatus.
3. ASTM D 256 - Determining the Pendulum Impact Resistance of Notched Specimens of Plastics.
4. ASTM D 543 - Evaluating the Resistance of Plastics to Chemical Reagents.
5. ASTM D 1308 - Effect of Household Chemicals on Clear and Pigmented Organic Finishes.
6. ASTM D 2126 - Response of Rigid Cellular Plastics to Thermal and Humid Aging.
7. ASTM D 6670-01 - Standard Practice for Full-Scale Chamber Determination of Volatile Organic Emissions from Indoor Materials/Products.
8. ASTM E 84 - Surface Burning Characteristics of Building Materials.
9. NFRC 102 – Procedure for Measuring the Steady-State Thermal Transmittance of Fenestration Systems.
10. NFRC 400 - Procedure for Determining Fenestration Product Air Leakage.
11. UL 10C - Positive Pressure Fire Tests of Door Assemblies.

1.3 SUBMITTALS

A. Product Data: For each type of product indicated. Include construction details, material descriptions, components, hardware reinforcements, profiles, and finishes.

B. Templates: Door hardware supplier is to furnish templates, template reference number and/or physical hardware to the door and frame supplier in order to prepare the doors and frames to receive the finish hardware items.

C. Shop Drawings: Include the following:

1. Elevations of each door design.
2. Details of doors.
3. Locations of reinforcement and preparations for hardware.
4. Details of each different wall opening condition.
5. Details of accessories.
6. Details of preparations for power, signal, and control systems.

D. Samples for Verification:

1. Samples are only required by request of the architect.

1.4 QUALITY ASSURANCE

A. Source Limitations: Obtain doors and frames through one source from a single manufacturer wherever possible.
   1. Smoke Control Door Assemblies: Comply with NFPA 105.

      a. Smoke "S" Label: Doors to bear “S” label, and include smoke and draft control gasketing applied to frame and on meeting stiles of pair doors.

B. Pre-Installation Conference: Conduct conference in compliance with requirements in Division 01 Section "Project Meetings" with attendance by representatives of Supplier, Installer, and Contractor to review proper methods and procedures for installing doors and frames and to verify installation of electrical knockout boxes and conduit at frames with electrified or access control hardware.

1.5 DELIVERY, STORAGE, AND HANDLING

A. Deliver work palletized, wrapped, or crated to provide protection during transit and Project-site storage. Do not use non-vented plastic.

B. Store materials under cover at Project site in accordance with the manufacturer’s instructions. Do not store in a manner that traps excess humidity

C. Provide minimum 1/4-inch (6-mm) space between each stacked door to permit air circulation. Stack doors and frames in a vertical upright position.

1.6 PROJECT CONDITIONS

A. Field Measurements: Verify actual dimensions of openings by field measurements before fabrication.

1.7 COORDINATION

A. Coordinate installation of anchorages for door frames. Furnish setting drawings, templates, and directions for installing anchorages, including sleeves, concrete inserts, anchor bolts, and items with integral anchors. Deliver such items to Project site in time for installation.

1.8 WARRANTY

A. Provide manufacturer's written warranty against defects in materials and workmanship upon final completion and acceptance of Work in this section. Warranty period is ten years.

PART 2 - PRODUCTS

2.1 MANUFACTURERS

A. Manufacturers: Subject to compliance with requirements, provide products by one of the following:

   1. CECO Door Products (C).
   2. Curries Company (CU).
   3. Special-Lite (SP).

B. Substitutions: Material from alternate door and frame fabricators will not be accepted on jobsite without prior written and sample approval in accordance with requirements specified in Division 01.

2.2 MATERIALS

A. Aluminum: 6063-T6 hardened aluminum alloy. 0.7 mil anodized finish.

B. Fiberglass Reinforced Plastic Sheet: Thickness of .120” with the finish color for the full thickness of the sheet.

C. Glazing: Comply with requirements in Division 08 Section, "Glazing."

2.3 FIBERGLASS REINFORCED POLYESTER DOORS

A. General: Provide 1-3/4 inch doors of type and design indicated, not less than thickness indicated; fabricated without visible joints or seams on exposed faces unless otherwise indicated.

1. Design: As indicated on the drawings.
2. Core Construction: Five pound density foam-in-place polyurethane core with a minimum U factor of 0.37.
3. Stiles and Rails: Extruded aluminum with mitered corners. Provide 3/8” diameter tie rods top and bottom.
4. Faces: Fiberglass reinforced plastic sheets of .120” thickness with a pebble texture.
5. Surface Applied Hardware Reinforcements: Fabricate according to ANSI/SDI A250.6.

2.4 FABRICATION

A. General: Fabricate work to be rigid and free of defects. Accurately form to required sizes and profiles.

B. Fiberglass Reinforced Polyester Doors:

1. Glazed Lites: Factory cut openings in doors with applied flush aluminum trim kit to fit.
2. Top Caps: Close tops of doors flush with aluminum top caps.

C. Surface Hardware Preparation: Factory prepare work to receive template mortised hardware; include cutouts, reinforcement, mortising, drilling, and tapping according to the Door Hardware Schedule and templates furnished as specified in Division 08 Section, "Door Hardware."

1. Locate hardware as indicated, or if not indicated, according to ANSI/SDI A250.8.
2. Reinforce doors to receive non-template, mortised and surface-mounted door hardware.
3. Comply with applicable requirements in ANSI/SDI A250.6 and ANSI/DHI A115 Series specifications for preparation of work for hardware.

2.5 FINISHES

A. Pebble texture face finish shall be:

1. To be selected.

B. Aluminum finish for stiles and rails, light kits shall be:

1. Satin Clear.

PART 3 - EXECUTION

3.1 EXAMINATION

A. Examine substrates, areas, and conditions, with Installer present, for compliance with requirements for installation tolerances and other conditions affecting performance of the Work.

B. Proceed with installation only after unsatisfactory conditions have been corrected.

3.2 PREPARATION

A. Prior to installation, check openings for squareness, alignment, twist, and plumbness.

B. Drill and tap doors and frames to receive non-template, mortised, and surface-mounted door hardware.

3.3 INSTALLATION

A. General: Install work plumb, rigid, properly aligned, and securely fastened in place; comply with Drawings and manufacturer's written instructions. Comply with NFPA 80 at fire rated openings.

B. Fiberglass Reinforced Polyester Doors: Fit doors accurately in frames, within clearances specified below. Shim as necessary.

1. Non-Fire-Rated Doors:

a. Jambs and Head: 1/8 inch (3 mm) plus or minus 1/16 inch (1.6 mm).
b. Between Edges of Pairs of Doors: 1/8 inch (3 mm) plus or minus 1/16 inch (1.6 mm).
c. Between Bottom of Door and Top of Finish Floor (No Threshold): Maximum 3/4 inch (19 mm).

C. Glazing: Comply with installation requirements in Division 08 Section "Glazing" and with door manufacturer's written instructions. Comply with NFPA requirements for fire rated glazing.

3.4 ADJUSTING AND CLEANING

A. Final Adjustments: Check and readjust operating hardware items immediately before final inspection. Leave work in complete and proper operating condition. Remove and replace defective work, including stainless steel work that is warped, bowed, or otherwise unacceptable.

B. Remove grout and other bonding material from stainless steel work immediately after installation.

C. Remove stains and materials that will have and adverse affect on the doors and frames and restore slight blemishes in accordance with manufacturer’s instructions to match original finish.

END OF SECTION 081613

SECTION 084113 - ALUMINUM-FRAMED ENTRANCES AND STOREFRONTS

PART 1 - GENERAL

1.1 SUMMARY

A. Section Includes:

1. Aluminum-framed storefront systems.
2. Aluminum-framed entrance door systems.

B. Related Requirements:

1. Section 081216 "Aluminum Frames" for interior aluminum framing.

1.2 PREINSTALLATION MEETINGS

A. Preinstallation Conference: Conduct conference at Project site .

1.3 ACTION SUBMITTALS

A. Product Data: For each type of product.

1. Include construction details, material descriptions, dimensions of individual components and profiles, and finishes.

B. Shop Drawings: For aluminum-framed entrances and storefronts. Include plans, elevations, sections, full-size details, and attachments to other work.

1. Include details of provisions for assembly expansion and contraction and for draining moisture occurring within the assembly to the exterior.
2. Include full-size isometric details of each type of vertical-to-horizontal intersection of aluminum-framed entrances and storefronts, showing the following:
   a. Joinery, including concealed welds.
   b. Anchorage.
   c. Expansion provisions.
   d. Glazing.
   e. Flashing and drainage.
3. Show connection to and continuity with adjacent thermal, weather, air, and vapor barriers.
4. Include point-to-point wiring diagrams showing the following:
   a. Power requirements for each electrically operated door hardware.
   b. Location and types of switches, signal device, conduit sizes, and number and size of wires.

Copyright © 2025 by the American Institute of Architects. Warning: This AIA MasterSpec-based document is protected by U.S. Copyright Law and International Treaties. It was created by "Michael Shilale Architects, LLP" for "Renovation of Rockland Green Administrative Headquarters and Construction of an Immersive Theatre Experience". A valid, current MasterSpec license is required for editing and use of this document for any other project.(22360)

C. Samples for Initial Selection: For units with factory-applied color finishes.

D. Samples for Verification: For each type of exposed finish required, in manufacturer's standard sizes.

E. Fabrication Sample: Of each vertical-to-horizontal intersection of assemblies, made from 12-inch lengths of full-size components and showing details of the following:

1. Joinery, including concealed welds.
2. Anchorage.
3. Expansion provisions.
4. Glazing.
5. Flashing and drainage.

F. Delegated Design Submittal: For aluminum-framed entrances and storefronts including analysis data signed and sealed by the qualified professional engineer responsible for their preparation.

1.4 INFORMATIONAL SUBMITTALS

A. Certificates:

1. Energy Performance Certificates: For aluminum-framed entrances and storefronts, accessories, and components, from manufacturer.
   a. Basis for Certification: NFRC-certified energy performance values for each aluminum-framed entrance and storefront.

B. Test and Evaluation Reports:

1. Product Test Reports: For aluminum-framed entrances and storefronts, for tests performed by qualified testing agency .

C. Quality-Control Program: Developed specifically for Project, including fabrication and installation, in accordance with recommendations in ASTM C1401. Include periodic quality-control reports.

D. Qualification Statements:

1. For Installer and laboratory mockup testing agency and field testing agency.

E. Sample warranties.

1.5 CLOSEOUT SUBMITTALS

A. Operation and Maintenance Data: For aluminum-framed entrances and storefronts.

1.6 QUALITY ASSURANCE

A. Qualifications:

Copyright © 2025 by the American Institute of Architects. Warning: This AIA MasterSpec-based document is protected by U.S. Copyright Law and International Treaties. It was created by "Michael Shilale Architects, LLP" for "Renovation of Rockland Green Administrative Headquarters and Construction of an Immersive Theatre Experience". A valid, current MasterSpec license is required for editing and use of this document for any other project.(22360)

1. Installers: An entity that employs installers and supervisors who are trained and approved by manufacturer and that employs a qualified glazing contractor for this Project who is certified under the North American Contractor Certification Program (NACC) for Architectural Glass & Metal (AG&M) contractors and that employs glazing technicians certified under the Architectural Glass and Metal Technician (AGMT) certification program.
2. Delegated Design Engineer: A professional engineer who is legally qualified to practice in state where Project is located and who is experienced in providing engineering services of the type indicated.
3. Testing Agency: Qualified in accordance with ASTM E699 for testing indicated and accredited by IAS or ILAC Mutual Recognition Arrangement as complying with ISO/IEC 17025 and acceptable to Owner and Architect.
4. Egress Door Inspector: Inspector for field quality-control inspections of egress door assemblies shall comply with qualifications set forth in NFPA 101, Section 7.2.1.15.4 and the following:
   a. DHI's Fire and Egress Door Assembly Inspector (FDAI) certification.

B. Product Options: Information on Drawings and in Specifications establishes requirements for aesthetic effects and performance characteristics of assemblies. Aesthetic effects are indicated by dimensions, arrangements, alignment, and profiles of components and assemblies as they relate to sightlines, to one another, and to adjoining construction.

1. Do not change intended aesthetic effects, as judged solely by Architect, except with Architect's approval. If changes are proposed, submit comprehensive explanatory data to Architect for review.

C. Structural-Sealant Glazing: Comply with ASTM C1401 for design and installation of storefront systems that include structural glazing.

1.7 MOCKUPS

A. Build mockups to verify selections made under Sample submittals, to demonstrate aesthetic effects, and to set quality standards for fabrication and installation.

1. Build mockup of typical wall area as shown on Drawings.
2. Testing shall be performed on mockups in accordance with requirements in "Field Quality Control" Article.
3. Approval of mockups does not constitute approval of deviations from the Contract Documents contained in mockups unless Architect specifically approves such deviations in writing.
4. Subject to compliance with requirements, approved mockups may become part of the completed Work if undisturbed at time of Substantial Completion.

1.8 PRECONSTRUCTION TESTING

A. Preconstruction Adhesion and Compatibility Testing: Submit to structural glazing sealant manufacturer, for testing indicated below, Samples of each glazing material type, tape sealant,

Copyright © 2025 by the American Institute of Architects. Warning: This AIA MasterSpec-based document is protected by U.S. Copyright Law and International Treaties. It was created by "Michael Shilale Architects, LLP" for "Renovation of Rockland Green Administrative Headquarters and Construction of an Immersive Theatre Experience". A valid, current MasterSpec license is required for editing and use of this document for any other project.(22360)

gasket, glazing accessory, and glass-framing member that is in close proximity to or is touching the structural or nonstructural sealants of a structural glazed system.

1. Compatibility: Test materials or components using ASTM C1087.
2. Adhesion: Test for adhesion or lack of adhesion of a structural sealant to the surface of another material or component using ASTM C1135.
3. Submit no fewer than eight pieces of each type of material, including joint substrates, shims, joint-sealant backings, secondary seals, and miscellaneous materials.
4. Schedule sufficient time for testing and analyzing results to prevent delaying the Work.
5. For materials failing tests, obtain sealant manufacturer's written instructions for corrective measures, including the use of specially formulated primers.
6. Testing will not be required if data based on previous testing of current sealant products match those submitted.

1.9 WARRANTY

A. Special Warranty: Installer agrees to repair or replace components of aluminum-framed entrances and storefronts that do not comply with requirements or that fail in materials or workmanship within specified warranty period.

1. Failures include, but are not limited to, the following:
   a. Structural failures, including, but not limited to, excessive deflection.
   b. Noise or vibration created by wind and thermal and structural movements.
   c. Deterioration of metals , metal finishes, and other materials beyond normal weathering.
   d. Water penetration through fixed glazing and framing areas.
   e. Failure of operating components.
2. Warranty Period: Five years from date of Substantial Completion.

B. Special Finish Warranty, Factory-Applied Finishes: Standard form in which manufacturer agrees to repair finishes or replace aluminum that shows evidence of deterioration of factory-applied finishes within specified warranty period.

1. Deterioration includes, but is not limited to, the following:
   a. Color fading more than 5 Delta E units when tested in accordance with ASTM D2244.
   b. Chalking in excess of a No. 8 rating when tested in accordance with ASTM D4214.
   c. Cracking, checking, peeling, or failure of paint to adhere to bare metal.
2. Warranty Period: Five years from date of Substantial Completion.

C. Special Finish Warranty, Anodized Finishes: Standard form in which manufacturer agrees to repair finishes or replace aluminum that shows evidence of deterioration of anodized finishes within specified warranty period.

1. Deterioration includes, but is not limited to, the following:
   a. Color fading more than 5 Delta E units when tested in accordance with ASTM D 2244.

Copyright © 2025 by the American Institute of Architects. Warning: This AIA MasterSpec-based document is protected by U.S. Copyright Law and International Treaties. It was created by "Michael Shilale Architects, LLP" for "Renovation of Rockland Green Administrative Headquarters and Construction of an Immersive Theatre Experience". A valid, current MasterSpec license is required for editing and use of this document for any other project.(22360)

b. Chalking in excess of a No. 8 rating when tested in accordance with ASTM D 4214.
c. Cracking, peeling, or chipping.

2. Warranty Period: Five years from date of Substantial Completion.

PART 2 - PRODUCTS

2.1 MANUFACTURERS

A. Source Limitations: Obtain all components of aluminum-framed entrance and storefront system, including framing and accessories, from single manufacturer.

2.2 PERFORMANCE REQUIREMENTS

A. Delegated Design: Engage a qualified professional engineer, as defined in Section 014000 "Quality Requirements," to design aluminum-framed entrances and storefronts.

B. General Performance: Comply with performance requirements specified, as determined by testing of aluminum-framed entrances and storefronts representing those indicated for this Project without failure due to defective manufacture, fabrication, installation, or other defects in construction.

1. Aluminum-framed entrances and storefronts shall withstand movements of supporting structure, including, but not limited to, twist, column shortening, long-term creep, and deflection from uniformly distributed and concentrated live loads.
2. Failure also includes the following:
   a. Thermal stresses transferring to building structure.
   b. Glass breakage.
   c. Noise or vibration created by wind and thermal and structural movements.
   d. Loosening or weakening of fasteners, attachments, and other components.
   e. Failure of operating units.

C. Structural Loads:

1. Wind Loads: As indicated on Drawings.

D. Deflection of Framing Members Supporting Glass: At design wind load, as follows:

1. Deflection Normal to Wall Plane: Limited to 1/175 of clear span for spans of up to 13 feet 6 inches and to 1/240 of clear span plus 1/4 inch for spans greater than 13 feet 6 inches .
2. Deflection Parallel to Glazing Plane: Limited to amount not exceeding that which reduces glazing bite to less than 75 percent of design dimension and that which reduces edge clearance between framing members and glazing or other fixed components to less than 1/8 inch .
   a. Operable Units: Provide a minimum 1/16-inch clearance between framing members and operable units.

Copyright © 2025 by the American Institute of Architects. Warning: This AIA MasterSpec-based document is protected by U.S. Copyright Law and International Treaties. It was created by "Michael Shilale Architects, LLP" for "Renovation of Rockland Green Administrative Headquarters and Construction of an Immersive Theatre Experience". A valid, current MasterSpec license is required for editing and use of this document for any other project.(22360)

3. Cantilever Deflection: Limited to 2L/175 at unsupported cantilevers.

E. Structural: Test in accordance with ASTM E330/E330M as follows:

1. When tested at positive and negative wind-load design pressures, storefront assemblies, including entrance doors, do not evidence deflection exceeding specified limits.
2. When tested at 150 percent of positive and negative wind-load design pressures, storefront assemblies, including entrance doors and anchorage, do not evidence material failures, structural distress, or permanent deformation of main framing members exceeding 0.2 percent of span.
3. Test Durations: As required by design wind velocity, but not less than 10 seconds.

F. Water Penetration under Static Pressure: Test in accordance with ASTM E331 as follows:

1. No evidence of water penetration through fixed glazing and framing areas, including entrance doors, when tested in accordance with a minimum static-air-pressure differential of 20 percent of positive wind-load design pressure, but not less than 10 lbf/sq. ft. .

G. Water Penetration under Dynamic Pressure: Test in accordance with AAMA 501.1 as follows:

1. No evidence of water penetration through fixed glazing and framing areas when tested at dynamic pressure equal to 20 percent of positive wind-load design pressure, but not less than 10 lbf/sq. ft. .
2. Maximum Water Leakage: In accordance with AAMA 501.1 . Water leakage does not include water controlled by flashing and gutters, or water that is drained to exterior.

H. Energy Performance: Certified and labeled by manufacturer for energy performance as follows:

1. Thermal Transmittance (U-factor):
   a. Entrance Doors: U-factor of not more than 0.77 Btu/sq. ft. x h x deg F as determined in accordance with NFRC 100.
2. Solar Heat-Gain Coefficient (SHGC):
   a. Fixed Glazing and Framing Areas: SHGC for the system of not more than 0.40 as determined in accordance with NFRC 200.
   b. Entrance Doors: SHGC of not more than 0.35 as determined in accordance with NFRC 200.
3. Air Leakage:
   a. Fixed Glazing and Framing Areas: Air leakage for the system of not more than 0.06 cfm/sq. ft. at a static-air-pressure differential of 6.24 lbf/sq. ft. when tested in accordance with ASTM E283.
   b. Entrance Doors: Air leakage of not more than 1.0 cfm/sq. ft. at a static-air-pressure differential of 1.57 lbf/sq. ft..
4. Condensation Resistance Factor (CRF):
   a. Fixed Glazing and Framing Areas: CRF for the system of not less than 55 as determined in accordance with AAMA 1503.
   b. Entrance Doors: CRF of not less than 63 as determined in accordance with AAMA 1503.

I. Noise Reduction: Test in accordance with ASTM E90, with ratings determined by ASTM E1332, as follows.

Copyright © 2025 by the American Institute of Architects. Warning: This AIA MasterSpec-based document is protected by U.S. Copyright Law and International Treaties. It was created by "Michael Shilale Architects, LLP" for "Renovation of Rockland Green Administrative Headquarters and Construction of an Immersive Theatre Experience". A valid, current MasterSpec license is required for editing and use of this document for any other project.(22360)

1. Outdoor-Indoor Transmission Class: Minimum 30 .

J. Thermal Movements: Allow for thermal movements resulting from ambient and surface temperature changes.

1. Temperature Change: 120 deg F, ambient; 180 deg F, material surfaces.

K. Structural-Sealant Joints:

1. Designed to carry gravity loads of glazing.

2.3 STOREFRONT SYSTEMS

A. Framing Members: Manufacturer's extruded- or formed-aluminum framing members of thickness required and reinforced as required to support imposed loads.

1. Exterior Framing Construction: Thermally broken .
2. Interior Vestibule Framing Construction: Nonthermal .
3. Glazing System: Retained mechanically with gaskets on four sides .
4. Glazing Plane: Front .
5. Finish: [**Baked-enamel or powder-coat finish**] [**High-performance organic finish**] .
6. Fabrication Method: Field-fabricated stick system.
7. Aluminum: Alloy and temper recommended by manufacturer for type of use and finish indicated.
8. Steel Reinforcement: As required by manufacturer.

B. Backer Plates: Manufacturer's standard, continuous backer plates for framing members, if not integral, where framing abuts adjacent construction.

C. Brackets and Reinforcements: Manufacturer's standard high-strength aluminum with nonstaining, nonferrous shims for aligning system components.

2.4 ENTRANCE DOOR SYSTEMS

A. <Click here to find, evaluate, and insert list of manufacturers and products.>

B. Entrance Doors: Manufacturer's standard glazed entrance doors for manual-swing or automatic operation.

1. Door Construction: 2-inch overall thickness, with minimum 0.188-inch- thick, extruded-aluminum tubular rail and stile members. Mechanically fasten corners with reinforcing brackets that are deeply penetrated and fillet welded or that incorporate concealed tie rods.
2. Door Design: Wide stile; 5-inch nominal width .
3. Glazing Stops and Gaskets: Square , snap-on, extruded-aluminum stops and preformed gaskets.
   a. Provide nonremovable glazing stops on outside of door.
4. Finish: Match adjacent storefront framing finish.

Copyright © 2025 by the American Institute of Architects. Warning: This AIA MasterSpec-based document is protected by U.S. Copyright Law and International Treaties. It was created by "Michael Shilale Architects, LLP" for "Renovation of Rockland Green Administrative Headquarters and Construction of an Immersive Theatre Experience". A valid, current MasterSpec license is required for editing and use of this document for any other project.(22360)

2.5 ENTRANCE DOOR HARDWARE

A. General: Provide entrance door hardware and entrance door hardware sets indicated in door and frame schedule for each entrance door, to comply with requirements in this Section.

1. Sequence of Operation: Provide electrified door hardware function, sequence of operation, and interface with other building control systems indicated.
2. Opening-Force Requirements:
   a. Egress Doors: Not more than 15 lbf to release the latch and not more than 30 lbf to set the door in motion and not more than 15 lbf to open the door to its minimum required width.
   b. Accessible Interior Doors: Not more than 5 lbf to fully open door.

B. Pivot Hinges: BHMA A156.4, Grade 1.

1. Offset-Pivot Hinges: Provide top, bottom, and intermediate offset pivots at each door leaf.

C. Butt Hinges: BHMA A156.1, Grade 1, radius corner.

1. Nonremovable Pins: Provide setscrew in hinge barrel that, when tightened into a groove in hinge pin, prevents removal of pin while entrance door is closed.
2. Exterior Hinges: Stainless steel, with stainless steel pin .
3. Quantities:
   a. For doors up to 87 inches high, provide three hinges per leaf.
   b. For doors more than 87 and up to 120 inches high, provide four hinges per leaf.

D. Continuous-Gear Hinges: BHMA A156.26.

E. Mortise Auxiliary Locks: BHMA A156.5, Grade 1.

F. Panic Exit Devices: BHMA A156.3, Grade 1, listed and labeled by a testing and inspecting agency acceptable to authorities having jurisdiction, for panic protection, based on testing in accordance with UL 305.

G. Cylinders:

1. As specified in Section 087100 "Door Hardware."
2. BHMA A156.5, Grade 1.
   a. Keying: Master key system. Permanently inscribe each key with a visual key control number and include notation "DO NOT DUPLICATE" .

H. Strikes: Provide strike with black-plastic dust box for each latch or lock bolt; fabricated for aluminum framing.

I. Operating Trim: BHMA A156.6.

J. Removable Mullions: BHMA A156.3 extruded aluminum.

Copyright © 2025 by the American Institute of Architects. Warning: This AIA MasterSpec-based document is protected by U.S. Copyright Law and International Treaties. It was created by "Michael Shilale Architects, LLP" for "Renovation of Rockland Green Administrative Headquarters and Construction of an Immersive Theatre Experience". A valid, current MasterSpec license is required for editing and use of this document for any other project.(22360)

1. When used with panic exit devices, provide keyed removable mullions listed and labeled by a testing and inspecting agency acceptable to authorities having jurisdiction, for panic protection, based on testing in accordance with UL 305. Use only mullions that have been tested with exit devices to be used.

K. Closers: BHMA A156.4, Grade 1, with accessories required for a complete installation, sized as required by door size, exposure to weather, and anticipated frequency of use; adjustable to comply with field conditions and requirements for opening force.

L. Concealed Overhead Holders and Stops: BHMA A156.8, Grade 1.

M. Door Stops: BHMA A156.16, Grade 1, floor or wall mounted, as appropriate for door location indicated, with integral rubber bumper.

N. Weather Stripping: Manufacturer's standard replaceable components.

1. Compression Type: Made of ASTM D2000 molded neoprene or ASTM D2287 molded PVC.
2. Sliding Type: AAMA 701/702, made of wool, polypropylene, or nylon woven pile with nylon-fabric or aluminum-strip backing.

O. Weather Sweeps: Manufacturer's standard exterior-door bottom sweep with concealed fasteners on mounting strip.

P. Thresholds: BHMA A156.21 raised thresholds beveled with a slope of not more than 1:2, with maximum height of 1/2 inch.

Q. Finger Guards: Manufacturer's standard collapsible neoprene or PVC gasket anchored to frame hinge-jamb at center-pivoted doors.

2.6 GLAZING

A. Glazing: Comply with Section 088000 "Glazing."

B. Glazing Gaskets: Manufacturer's standard sealed-corner pressure-glazing system of black, resilient elastomeric glazing gaskets, setting blocks, and shims or spacers.

C. Weatherseal Sealants: ASTM C920 for Type S; Grade NS; Class 25; Uses NT, G, A, and O; chemically curing silicone formulation that is compatible with structural sealant and other system components with which it comes in contact; recommended by structural-sealant, weatherseal-sealant, and structural-sealant-glazed storefront manufacturers for this use.

1. Color: Match structural sealant.

2.7 MATERIALS

A. Sheet and Plate: ASTM B209.

Copyright © 2025 by the American Institute of Architects. Warning: This AIA MasterSpec-based document is protected by U.S. Copyright Law and International Treaties. It was created by "Michael Shilale Architects, LLP" for "Renovation of Rockland Green Administrative Headquarters and Construction of an Immersive Theatre Experience". A valid, current MasterSpec license is required for editing and use of this document for any other project.(22360)

B. Extruded Bars, Rods, Profiles, and Tubes: ASTM B221.

C. Structural Profiles: ASTM B308/B308M.

D. Steel Reinforcement:

1. Structural Shapes, Plates, and Bars: ASTM A36/A36M.
2. Cold-Rolled Sheet and Strip: ASTM A1008/A1008M.
3. Hot-Rolled Sheet and Strip: ASTM A1011/A1011M.

E. Steel Reinforcement Primer: Manufacturer's standard zinc-rich, corrosion-resistant primer complying with SSPC-PS Guide No. 12.00; applied immediately after surface preparation and pretreatment. Select surface preparation methods in accordance with recommendations in SSPC-SP COM, and prepare surfaces in accordance with applicable SSPC standard.

2.8 ACCESSORIES

A. Fasteners and Accessories: Manufacturer's standard corrosion-resistant, nonstaining, nonbleeding fasteners and accessories compatible with adjacent materials.

1. Use self-locking devices where fasteners are subject to loosening or turning out from thermal and structural movements, wind loads, or vibration.
2. Reinforce members as required to receive fastener threads.
3. Use exposed fasteners with countersunk Phillips screw heads , finished to match framing system .

B. Anchors: Three-way adjustable anchors with minimum adjustment of 1 inch that accommodate fabrication and installation tolerances in material and finish compatible with adjoining materials and recommended by manufacturer.

1. Concrete and Masonry Inserts: Hot-dip galvanized cast-iron, malleable-iron, or steel inserts complying with ASTM A123/A123M or ASTM A153/A153M requirements.

C. Concealed Flashing: Manufacturer's standard corrosion-resistant, nonstaining, nonbleeding flashing compatible with adjacent materials .

D. Bituminous Paint: Cold-applied asphalt-mastic paint containing no asbestos, formulated for 30-mil thickness per coat.

E. Rigid PVC filler.

2.9 FABRICATION

A. Form or extrude aluminum shapes before finishing.

B. Weld in concealed locations to greatest extent possible to minimize distortion or discoloration of finish. Remove weld spatter and welding oxides from exposed surfaces by descaling or grinding.

Copyright © 2025 by the American Institute of Architects. Warning: This AIA MasterSpec-based document is protected by U.S. Copyright Law and International Treaties. It was created by "Michael Shilale Architects, LLP" for "Renovation of Rockland Green Administrative Headquarters and Construction of an Immersive Theatre Experience". A valid, current MasterSpec license is required for editing and use of this document for any other project.(22360)

C. Fabricate components that, when assembled, have the following characteristics:

1. Profiles that are sharp, straight, and free of defects or deformations.
2. Accurately fitted joints with ends coped or mitered.
3. Physical and thermal isolation of glazing from framing members.
4. Accommodations for thermal and mechanical movements of glazing and framing to maintain required glazing edge clearances.
5. Provisions for field replacement of glazing from exterior .
6. Fasteners, anchors, and connection devices that are concealed from view to greatest extent possible.

D. Mechanically Glazed Framing Members: Fabricate for flush glazing without projecting stops.

E. Structural-Sealant-Glazed Framing Members: Include accommodations for using temporary support device to retain glazing in place while structural sealant cures.

F. Storefront Framing: Fabricate components for assembly using shear-block system .

G. Entrance Door Frames: Reinforce as required to support loads imposed by door operation and for installing entrance door hardware.

1. At interior and exterior doors, provide compression weather stripping at fixed stops.

H. Entrance Doors: Reinforce doors as required for installing entrance door hardware.

1. At pairs of exterior doors, provide sliding-type weather stripping retained in adjustable strip and mortised into door edge.
2. At exterior doors, provide weather sweeps applied to door bottoms.

I. Entrance Door Hardware Installation: Factory install entrance door hardware to the greatest extent possible. Cut, drill, and tap for factory-installed entrance door hardware before applying finishes.

J. After fabrication, clearly mark components to identify their locations in Project in accordance with Shop Drawings.

2.10 ALUMINUM FINISHES

A. Baked-Enamel or Powder-Coat Finish: AAMA 2603 except with a minimum dry film thickness of 1.5 mils. Comply with coating manufacturer's written instructions for cleaning, conversion coating, and applying and baking finish.

1. Color and Gloss: As selected by Architect from manufacturer's full range .

B. High-Performance Organic Finish, Two-Coat PVDF: Fluoropolymer finish complying with AAMA 2604 and containing not less than 50 percent PVDF resin by weight in color coat.

1. Prepare, pretreat, and apply coating to exposed metal surfaces to comply with coating and resin manufacturers' written instructions.

Copyright © 2025 by the American Institute of Architects. Warning: This AIA MasterSpec-based document is protected by U.S. Copyright Law and International Treaties. It was created by "Michael Shilale Architects, LLP" for "Renovation of Rockland Green Administrative Headquarters and Construction of an Immersive Theatre Experience". A valid, current MasterSpec license is required for editing and use of this document for any other project.(22360)

2. Color and Gloss: As selected by Architect from manufacturer's full range .

2.11 SOURCE QUALITY CONTROL

A. Structural Sealant: Perform quality-control procedures complying with ASTM C1401 recommendations, including, but not limited to, assembly material qualification procedures, sealant testing, and assembly fabrication reviews and checks.

PART 3 - EXECUTION

3.1 EXAMINATION

A. Examine areas, with Installer present, for compliance with requirements for installation tolerances and other conditions affecting performance of the Work.

B. Proceed with installation only after unsatisfactory conditions have been corrected.

3.2 INSTALLATION, GENERAL

A. Comply with manufacturer's written instructions.

B. Do not install damaged components.

C. Fit joints to produce hairline joints free of burrs and distortion.

D. Rigidly secure nonmovement joints.

E. Install anchors with separators and isolators to prevent metal corrosion and electrolytic deterioration and to prevent impeding movement of moving joints.

F. Seal perimeter and other joints watertight unless otherwise indicated.

G. Metal Protection:

1. Where aluminum is in contact with dissimilar metals, protect against galvanic action by painting contact surfaces with materials recommended by manufacturer for this purpose or by installing nonconductive spacers.
2. Where aluminum is in contact with concrete or masonry, protect against corrosion by painting contact surfaces with bituminous paint.

H. Set continuous sill members and flashing in full sealant bed, as specified in Section 079200 "Joint Sealants," to produce weathertight installation.

I. Install joint filler behind sealant as recommended by sealant manufacturer.

J. Install components plumb and true in alignment with established lines and grades.

Copyright © 2025 by the American Institute of Architects. Warning: This AIA MasterSpec-based document is protected by U.S. Copyright Law and International Treaties. It was created by "Michael Shilale Architects, LLP" for "Renovation of Rockland Green Administrative Headquarters and Construction of an Immersive Theatre Experience". A valid, current MasterSpec license is required for editing and use of this document for any other project.(22360)

3.3 INSTALLATION OF GLAZING

A. Install glazing as specified in Section 088000 "Glazing."

3.4 INSTALLATION OF WEATHERSEAL SEALANT

A. After structural sealant has completely cured, remove temporary retainers and insert backer rod between lites of glass as recommended by sealant manufacturer.

B. Install weatherseal sealant to completely fill cavity, in accordance with sealant manufacturer's written instructions, to produce weatherproof joints.

3.5 INSTALLATION OF ALUMINUM-FRAMED ENTRANCE DOORS

A. Install entrance doors to produce smooth operation and tight fit at contact points.

1. Exterior Doors: Install to produce weathertight enclosure and tight fit at weather stripping.
2. Field-Installed Entrance Door Hardware: Install surface-mounted entrance door hardware in accordance with entrance door hardware manufacturers' written instructions using concealed fasteners to greatest extent possible.

3.6 ERECTION TOLERANCES

A. Install aluminum-framed entrances and storefronts to comply with the following maximum tolerances:

1. Plumb: 1/8 inch in 10 feet; 1/4 inch in 40 feet.
2. Level: 1/8 inch in 20 feet; 1/4 inch in 40 feet.
3. Alignment:
   a. Where surfaces abut in line or are separated by reveal or protruding element up to 1/2 inch wide, limit offset from true alignment to 1/16 inch.
   b. Where surfaces are separated by reveal or protruding element from 1/2 to 1 inch wide, limit offset from true alignment to 1/8 inch.
   c. Where surfaces are separated by reveal or protruding element of 1 inch wide or more, limit offset from true alignment to 1/4 inch.
4. Location: Limit variation from plane to 1/8 inch in 12 feet; 1/2 inch over total length.

3.7 FIELD QUALITY CONTROL

A. Testing Agency: Owner will engage a qualified testing agency to perform tests and inspections.

B. Tests and Inspections: Perform the following tests on representative areas of aluminum-framed entrances and storefronts .

Copyright © 2025 by the American Institute of Architects. Warning: This AIA MasterSpec-based document is protected by U.S. Copyright Law and International Treaties. It was created by "Michael Shilale Architects, LLP" for "Renovation of Rockland Green Administrative Headquarters and Construction of an Immersive Theatre Experience". A valid, current MasterSpec license is required for editing and use of this document for any other project.(22360)

1. Water-Spray Test: Before installation of interior finishes has begun, areas designated by Architect shall be tested in accordance with AAMA 501.2 and shall not evidence water penetration.
   a. Perform a minimum of two tests in areas as directed by Architect.
   b. Perform tests in each test area as directed by Architect. Perform at least three tests, prior to 10, 35, and 70 percent completion .
2. Air Leakage: ASTM E783 at 1.5 times the rate specified for laboratory testing in "Performance Requirements" Article but not more than 0.09 cfm/sq. ft. at a static-air-pressure differential of 1.57 lbf/sq. ft..
   a. Perform a minimum of two tests in areas as directed by Architect.
   b. Perform tests in each test area as directed by Architect. Perform at least three tests, prior to 10, 35, and 70 percent completion .
3. Water Penetration: ASTM E1105 at a minimum uniform static-air-pressure differential of 0.67 times the static-air-pressure differential specified for laboratory testing in "Performance Requirements" Article, but not less than 6.24 lbf/sq. ft., and shall not evidence water penetration.
4. Structural-Sealant Adhesion: Test structural sealant in accordance with recommendations in ASTM C1401, Destructive Test Method A, "Hand Pull Tab (Destructive)," Appendix X2.
   a. Test a minimum of four areas on each building facade.
   b. Repair installation areas damaged by testing.
5. Egress Door Inspections: Inspect each aluminum-framed entrance door equipped with panic hardware, each aluminum-framed entrance door located in an exit enclosure, each electrically controlled aluminum-framed egress door, and each aluminum-framed entrance door equipped with special locking arrangements, in accordance with NFPA 101, Section 7.2.1.15.

C. Aluminum-framed entrances and storefronts will be considered defective if they do not pass tests and inspections.

D. Prepare test and inspection reports.

3.8 MAINTENANCE SERVICE

A. Entrance Door Hardware Maintenance:

1. Maintenance Tools and Instructions: Furnish a complete set of specialized tools and maintenance instructions as needed for Owner's continued adjustment, maintenance, and removal and replacement of entrance door hardware.
2. Initial Maintenance Service: Beginning at Substantial Completion, provide six months' full maintenance by skilled employees of entrance door hardware Installer. Include quarterly preventive maintenance, repair or replacement of worn or defective components, lubrication, cleaning, and adjusting as required for proper entrance door hardware operation at rated speed and capacity. Use parts and supplies that are the same as those used in the manufacture and installation of original equipment.

END OF SECTION 084113

Copyright © 2025 by the American Institute of Architects. Warning: This AIA MasterSpec-based document is protected by U.S. Copyright Law and International Treaties. It was created by "Michael Shilale Architects, LLP" for "Renovation of Rockland Green Administrative Headquarters and Construction of an Immersive Theatre Experience". A valid, current MasterSpec license is required for editing and use of this document for any other project.(22360)

SECTION 087100 - DOOR HARDWARE

PART 1 - GENERAL

1.1 SUMMARY

A. Section Includes:

1. Mechanical door hardware for the following:
   a. Swinging doors.
2. Cylinders for door hardware specified in other Sections.
3. Electrified door hardware.

B. Related Requirements:

1. Section 081113 "Hollow Metal Doors and Frames" for astragals provided as part of labeled fire-rated assemblies and for door silencers provided as part of hollow-metal frames.
2. Section 081216 "Aluminum Frames" for door silencers provided as part of aluminum frames.
3. Section 284621.11 "Addressable Fire-Alarm Systems" for connections to building fire-alarm system.

1.2 COORDINATION

A. Floor-Recessed Door Hardware: Coordinate layout and installation with floor construction.

1. Cast anchoring inserts into concrete.

B. Installation Templates: Distribute for doors, frames, and other work specified to be factory prepared. Check Shop Drawings of other work to confirm that adequate provisions are made for locating and installing door hardware to comply with indicated requirements.

C. Security: Coordinate installation of door hardware, keying, and access control with Owner's security consultant.

D. Electrical System Roughing-In: Coordinate layout and installation of electrified door hardware with connections to power supplies and building safety and security systems.

E. Existing Openings: Where hardware components are scheduled for application to existing construction or where modifications to existing door hardware are required, field verify existing conditions and coordinate installation of door hardware to suit opening conditions and to provide proper door operation.

Copyright © 2025 by the American Institute of Architects. Warning: This AIA MasterSpec-based document is protected by U.S. Copyright Law and International Treaties. It was created by "Michael Shilale Architects, LLP" for "Renovation of Rockland Green Administrative Headquarters and Construction of an Immersive Theatre Experience". A valid, current MasterSpec license is required for editing and use of this document for any other project.(22360)

1.3 PREINSTALLATION MEETINGS

A. Preinstallation Conference: Conduct conference at Project site .

B. Keying Conference: Conduct conference at Project site .

1. Conference participants shall include Installer's Architectural Hardware Consultant.
2. Incorporate conference decisions into keying schedule after reviewing door hardware keying system including, but not limited to, the following:
   a. Flow of traffic and degree of security required.
   b. Preliminary key system schematic diagram.
   c. Requirements for key control system.
   d. Requirements for access control.
   e. Address for delivery of keys.

1.4 ACTION SUBMITTALS

A. Product Data: For each type of product.

1. Include construction details, material descriptions, dimensions of individual components and profiles, and finishes.

B. Shop Drawings: For electrified door hardware.

1. Include diagrams for power, signal, and control wiring.
2. Include details of interface of electrified door hardware and building safety and security systems.

C. Samples: For each exposed product in each finish specified, in manufacturer's standard size.

1. Tag Samples with full product description to coordinate Samples with door hardware schedule.

D. Door Hardware Schedule: Prepared by or under the supervision of Installer's Architectural Hardware Consultant. Coordinate door hardware schedule with doors, frames, and related work to ensure proper size, thickness, hand, function, and finish of door hardware.

1. Submittal Sequence: Submit door hardware schedule concurrent with submissions of Product Data, Samples, and Shop Drawings. Coordinate submission of door hardware schedule with scheduling requirements of other work to facilitate the fabrication of other work that is critical in Project construction schedule.
2. Format: Use same scheduling sequence and format and use same door numbers as in door hardware schedule in the Contract Documents.
3. Content: Include the following information:
   a. Identification number, location, hand, fire rating, size, and material of each door and frame.
   b. Locations of each door hardware set, cross-referenced to Drawings on floor plans and to door and frame schedule.

Copyright © 2025 by the American Institute of Architects. Warning: This AIA MasterSpec-based document is protected by U.S. Copyright Law and International Treaties. It was created by "Michael Shilale Architects, LLP" for "Renovation of Rockland Green Administrative Headquarters and Construction of an Immersive Theatre Experience". A valid, current MasterSpec license is required for editing and use of this document for any other project.(22360)

c. Complete designations, including name and manufacturer, type, style, function, size, quantity, function, and finish of each door hardware product.
d. Description of electrified door hardware sequences of operation and interfaces with other building control systems.
e. Fastenings and other installation information.
f. Explanation of abbreviations, symbols, and designations contained in door hardware schedule.
g. Mounting locations for door hardware.
h. List of related door devices specified in other Sections for each door and frame.

E. Keying Schedule: Prepared by or under the supervision of Installer's Architectural Hardware Consultant, detailing Owner's final keying instructions for locks. Include schematic keying diagram and index each key set to unique door designations that are coordinated with the Contract Documents.

1.5 INFORMATIONAL SUBMITTALS

A. Qualification Data: For and .

B. Product Certificates: For each type of electrified door hardware.

1. Certify that door hardware for use on each type and size of labeled fire-rated doors complies with listed fire-rated door assemblies.

C. Sample Warranty: For special warranty.

1.6 CLOSEOUT SUBMITTALS

A. Maintenance Data: For each type of door hardware to include in maintenance manuals.

B. Schedules: Final door hardware and schedule.

1.7 MAINTENANCE MATERIAL SUBMITTALS

1.8 QUALITY ASSURANCE

A. Installer Qualifications: Supplier of products and an employer of workers trained and approved by product manufacturers and of an Architectural Hardware Consultant who is available during the course of the Work to consult Contractor, Architect, and Owner about door hardware and keying.

1. Warehousing Facilities: In Project's vicinity.
2. Scheduling Responsibility: Preparation of door hardware and keying schedule.

B. Architectural Hardware Consultant Qualifications: A person who is experienced in providing consulting services for door hardware installations that are comparable in material, design, and

Copyright © 2025 by the American Institute of Architects. Warning: This AIA MasterSpec-based document is protected by U.S. Copyright Law and International Treaties. It was created by "Michael Shilale Architects, LLP" for "Renovation of Rockland Green Administrative Headquarters and Construction of an Immersive Theatre Experience". A valid, current MasterSpec license is required for editing and use of this document for any other project.(22360)

extent to that indicated for this Project and who is currently certified by DHI as an Architectural Hardware Consultant (AHC) and an Electrified Hardware Consultant (EHC) .

1.9 DELIVERY, STORAGE, AND HANDLING

A. Inventory door hardware on receipt and provide secure lock-up for door hardware delivered to Project site.

B. Tag each item or package separately with identification coordinated with the final door hardware schedule, and include installation instructions, templates, and necessary fasteners with each item or package.

C. Deliver keys to manufacturer of key control system for subsequent delivery to Owner.

1.10 WARRANTY

A. Special Warranty: Manufacturer agrees to repair or replace components of door hardware that fail in materials or workmanship within specified warranty period.

1. Failures include, but are not limited to, the following:
   a. Structural failures including excessive deflection, cracking, or breakage.
   b. Faulty operation of doors and door hardware.
   c. Deterioration of metals, metal finishes, and other materials beyond normal weathering and use.
2. Warranty Period: Three years from date of Substantial Completion unless otherwise indicated below:
   a. Electromagnetic Locks: Five years from date of Substantial Completion.
   b. Exit Devices: Two years from date of Substantial Completion.
   c. Manual Closers: 10 years from date of Substantial Completion.

PART 2 - PRODUCTS

2.1 MANUFACTURERS

A. Source Limitations: Obtain each type of door hardware from single manufacturer.

1. Provide electrified door hardware from same manufacturer as mechanical door hardware unless otherwise indicated. Manufacturers that perform electrical modifications and that are listed by a testing and inspecting agency acceptable to authorities having jurisdiction are acceptable.

2.2 PERFORMANCE REQUIREMENTS

A. Fire-Rated Door Assemblies: Where fire-rated doors are indicated, provide door hardware complying with NFPA 80 that is listed and labeled by a qualified testing agency, for fire-

Copyright © 2025 by the American Institute of Architects. Warning: This AIA MasterSpec-based document is protected by U.S. Copyright Law and International Treaties. It was created by "Michael Shilale Architects, LLP" for "Renovation of Rockland Green Administrative Headquarters and Construction of an Immersive Theatre Experience". A valid, current MasterSpec license is required for editing and use of this document for any other project.(22360)

protection ratings indicated, based on testing at positive pressure in accordance with NFPA 252 or UL 10C.

B. Electrified Door Hardware: Listed and labeled as defined in NFPA 70, by a qualified testing agency, and marked for intended location and application.

C. Means of Egress Doors: Latches do not require more than 15 lbf to release the latch. Locks do not require use of a key, tool, or special knowledge for operation.

D. Accessibility Requirements: For door hardware on doors in an accessible route, comply with ICC A117.1 .

1. Provide operating devices that do not require tight grasping, pinching, or twisting of the wrist and that operate with a force of not more than 5 lbf.
2. Comply with the following maximum opening-force requirements:
   a. Interior, Non-Fire-Rated Hinged Doors: 5 lbf applied perpendicular to door.
   b. Sliding or Folding Doors: 5 lbf applied parallel to door at latch.
   c. Fire Doors: Minimum opening force allowable by authorities having jurisdiction.
3. Bevel raised thresholds with a slope of not more than 1:2. Provide thresholds not more than 1/2 inch high.
4. Adjust door closer sweep periods so that, from an open position of 90 degrees, the door will take at least 5 seconds to move to a position of 12 degrees from the latch.
5. Adjust spring hinges so that, from an open position of 70 degrees, the door will take at least 1.5 seconds to move to the closed position.

2.3 CONTINUOUS HINGES

A. Continuous Hinges: BHMA A156.26; minimum 0.120-inch- thick, hinge leaves with minimum overall width of 4 inches; fabricated to full height of door and frame and to template screw locations; with components finished after milling and drilling are complete.

B. Continuous, Gear-Type Hinges: Extruded-aluminum, pinless, geared hinge leaves joined by a continuous extruded-aluminum channel cap; with concealed, self-lubricating thrust bearings.

1. Manufacturers: Subject to compliance with requirements, provide products by one of the following:
   a. Allegion plc.
   b. Hager Companies.
   c. Pemko Manufacturing Company Inc.; ASSA ABLOY Accessories and Door Controls Group, Inc.; ASSA ABLOY.

2.4 MECHANICAL LOCKS AND LATCHES

A. Lock Functions: As indicated in door hardware schedule.

B. Lock Throw: Comply with testing requirements for length of bolts required for labeled fire doors, and as follows:

Copyright © 2025 by the American Institute of Architects. Warning: This AIA MasterSpec-based document is protected by U.S. Copyright Law and International Treaties. It was created by "Michael Shilale Architects, LLP" for "Renovation of Rockland Green Administrative Headquarters and Construction of an Immersive Theatre Experience". A valid, current MasterSpec license is required for editing and use of this document for any other project.(22360)

1. Bored Locks: Minimum 1/2-inch latchbolt throw.
2. Deadbolts: Minimum 1.25-inch bolt throw.

C. Lock Backset: 2-3/4 inches unless otherwise indicated.

D. Lock Trim:

1. Description: As indicated on Drawings .
2. Levers: Forged .
   a. see drawings for type and function .
3. Escutcheons (Roses): Wrought .
4. Dummy Trim: Match lever lock trim and escutcheons.

E. Strikes: Provide manufacturer's standard strike for each lock bolt or latchbolt complying with requirements indicated for applicable lock or latch and with strike box and curved lip extended to protect frame; finished to match lock or latch.

1. Extra-Long-Lip Strikes: For locks used on frames with applied wood casing trim.

F. Bored Locks: BHMA A156.2; Grade 1 ; Series 4000.

G. Interconnected Locks: BHMA A156.12; Grade 1 ; Series 5000.

2.5 ELECTRIC STRIKES

A. Electric Strikes: BHMA A156.31; Grade 1 ; with faceplate to suit lock and frame.

2.6 EXIT LOCKS AND EXIT ALARMS

A. Exit Locks and Alarms: BHMA A156.29, Grade 1.

2.7 MANUAL FLUSH BOLTS

A. Manual Flush Bolts: BHMA A156.16; minimum 3/4-inch throw; designed for mortising into door edge.

2.8 EXIT DEVICES AND AUXILIARY ITEMS

A. Exit Devices and Auxiliary Items: BHMA A156.3.

2.9 LOCK CYLINDERS

A. Lock Cylinders: Tumbler type, constructed from brass or bronze, stainless steel, or nickel silver. Provide cylinder from same manufacturer of locking devices.

Copyright © 2025 by the American Institute of Architects. Warning: This AIA MasterSpec-based document is protected by U.S. Copyright Law and International Treaties. It was created by "Michael Shilale Architects, LLP" for "Renovation of Rockland Green Administrative Headquarters and Construction of an Immersive Theatre Experience". A valid, current MasterSpec license is required for editing and use of this document for any other project.(22360)

B. Standard Lock Cylinders: BHMA A156.5; Grade 1 permanent cores; face finished to match lockset.

1. Core Type: Removable.

C. Construction Cores: Provide construction cores that are replaceable by permanent cores. Provide 10 construction master keys.

2.10 KEYING

A. Keying System: Factory registered, complying with guidelines in BHMA A156.28, appendix. Provide one extra key blank for each lock. Incorporate decisions made in keying conference.

1. Existing System:
   a. Master key or grand master key locks to Owner's existing system.
   b. Re-key Owner's existing master key system into new keying system.
2. Keyed Alike: Key all cylinders to same change key.

B. Keys: Nickel silver .

1. Stamping: Permanently inscribe each key with a visual key control number and include the following notation:
   a. Notation: "DO NOT DUPLICATE."

2.11 OPERATING TRIM

A. Operating Trim: BHMA A156.6; stainless steel unless otherwise indicated.

2.12 ACCESSORIES FOR PAIRS OF DOORS

A. Coordinators: BHMA A156.3; consisting of active-leaf, hold-open lever and inactive-leaf release trigger; fabricated from steel with nylon-coated strike plates; with built-in, adjustable safety release ; and with internal override.

B. Carry-Open Bars: BHMA A156.3; prevent the inactive leaf from opening before the active leaf; provide polished brass or bronze carry-open bars with strike plate for inactive leaves of pairs of doors unless automatic or self-latching bolts are used.

C. Astragals: BHMA A156.22.

2.13 SURFACE CLOSERS

A. Surface Closers: BHMA A156.4; rack-and-pinion hydraulic type with adjustable sweep and latch speeds controlled by key-operated valves and forged-steel main arm. Comply with manufacturer's written instructions for size of door closers depending on size of door, exposure

Copyright © 2025 by the American Institute of Architects. Warning: This AIA MasterSpec-based document is protected by U.S. Copyright Law and International Treaties. It was created by "Michael Shilale Architects, LLP" for "Renovation of Rockland Green Administrative Headquarters and Construction of an Immersive Theatre Experience". A valid, current MasterSpec license is required for editing and use of this document for any other project.(22360)

to weather, and anticipated frequency of use. Provide factory-sized closers, adjustable to meet field conditions and requirements for opening force.

2.14 CLOSER HOLDER RELEASE DEVICES

A. Closer Holder Release Devices: BHMA A156.15; Grade 1; closer connected with separate or integral releasing and fire- or smoke-detecting devices. Door shall become self-closing on interruption of signal to release device. Automatic release is activated by smoke detection system .

2.15 DOOR GASKETING

A. Door Gasketing: BHMA A156.22; with resilient or flexible seal strips that are easily replaceable and readily available from stocks maintained by manufacturer.

B. Maximum Air Leakage: When tested in accordance with ASTM E283 with tested pressure differential of 0.3-inch wg, as follows:

1. Smoke-Rated Gasketing: 0.3 cfm/sq. ft. of door opening.
2. Gasketing on Single Doors: 0.3 cfm/sq. ft. of door opening.
3. Gasketing on Double Doors: 0.50 cfm per ft. of door opening.

2.16 THRESHOLDS

A. Thresholds: BHMA A156.21; fabricated to full width of opening indicated.

2.17 METAL PROTECTIVE TRIM UNITS

A. Metal Protective Trim Units: BHMA A156.6; fabricated from 0.050-inch- thick stainless steel; with manufacturer's standard machine or self-tapping screw fasteners.

2.18 AUXILIARY ELECTRIFIED DOOR HARDWARE

2.19 FABRICATION

A. Manufacturer's Nameplate: Do not provide products that have manufacturer's name or trade name displayed in a visible location except in conjunction with required fire-rating labels and as otherwise approved by Architect.

1. Manufacturer's identification is permitted on rim of lock cylinders only.

B. Base Metals: Produce door hardware units of base metal indicated, fabricated by forming method indicated, using manufacturer's standard metal alloy, composition, temper, and hardness. Furnish metals of a quality equal to or greater than that of specified door hardware units and BHMA A156.18.

Copyright © 2025 by the American Institute of Architects. Warning: This AIA MasterSpec-based document is protected by U.S. Copyright Law and International Treaties. It was created by "Michael Shilale Architects, LLP" for "Renovation of Rockland Green Administrative Headquarters and Construction of an Immersive Theatre Experience". A valid, current MasterSpec license is required for editing and use of this document for any other project.(22360)

C. Fasteners: Provide door hardware manufactured to comply with published templates prepared for machine, wood, and sheet metal screws. Provide screws that comply with commercially recognized industry standards for application intended, except aluminum fasteners are not permitted. Provide Phillips flat-head screws with finished heads to match surface of door hardware unless otherwise indicated.

1. Concealed Fasteners: For door hardware units that are exposed when door is closed, except for units already specified with concealed fasteners. Do not use through bolts for installation where bolt head or nut on opposite face is exposed unless it is the only means of securely attaching the door hardware. Where through bolts are used on hollow door and frame construction, provide sleeves for each through bolt.
2. Fire-Rated Applications:
   a. Wood or Machine Screws: For the following:
      1) Hinges mortised to doors or frames.
      2) Strike plates to frames.
      3) Closers to doors and frames.
   b. Steel Through Bolts: For the following unless door blocking is provided:
      1) Surface hinges to doors.
      2) Closers to doors and frames.
      3) Surface-mounted exit devices.
3. Spacers or Sex Bolts: For through bolting of hollow-metal doors.
4. Gasketing Fasteners: Provide noncorrosive fasteners for exterior applications and elsewhere as indicated.

2.20 FINISHES

A. Provide finishes complying with BHMA A156.18 as indicated in door hardware schedule.

B. Protect mechanical finishes on exposed surfaces from damage by applying a strippable, temporary protective covering before shipping.

C. Appearance of Finished Work: Variations in appearance of abutting or adjacent pieces are acceptable if they are within one-half of the range of approved Samples. Noticeable variations in the same piece are not acceptable. Variations in appearance of other components are acceptable if they are within the range of approved Samples and are assembled or installed to minimize contrast.

PART 3 - EXECUTION

3.1 EXAMINATION

A. Examine doors and frames, with Installer present, for compliance with requirements for installation tolerances, labeled fire-rated door assembly construction, wall and floor construction, and other conditions affecting performance of the Work.

B. Examine roughing-in for electrical power systems to verify actual locations of wiring connections before electrified door hardware installation.

Copyright © 2025 by the American Institute of Architects. Warning: This AIA MasterSpec-based document is protected by U.S. Copyright Law and International Treaties. It was created by "Michael Shilale Architects, LLP" for "Renovation of Rockland Green Administrative Headquarters and Construction of an Immersive Theatre Experience". A valid, current MasterSpec license is required for editing and use of this document for any other project.(22360)

C. Proceed with installation only after unsatisfactory conditions have been corrected.

3.2 PREPARATION

A. Steel Doors and Frames: For surface-applied door hardware, drill and tap doors and frames in accordance with ANSI/SDI A250.6.

3.3 INSTALLATION

A. Mounting Heights: Mount door hardware units at heights to comply with the following unless otherwise indicated or required to comply with governing regulations.

1. Standard Steel Doors and Frames: ANSI/SDI A250.8.
2. Custom Steel Doors and Frames: HMMA 831.

B. Install each door hardware item to comply with manufacturer's written instructions. Where cutting and fitting are required to install door hardware onto or into surfaces that are later to be painted or finished in another way, coordinate removal, storage, and reinstallation of surface protective trim units with finishing work. Do not install surface-mounted items until finishes have been completed on substrates involved.

1. Set units level, plumb, and true to line and location. Adjust and reinforce attachment substrates as necessary for proper installation and operation.
2. Drill and countersink units that are not factory prepared for anchorage fasteners. Space fasteners and anchors according to industry standards.

C. Lock Cylinders: Install construction cores to secure building and areas during construction period.

1. Replace construction cores with permanent cores as indicated in keying schedule .
2. Furnish permanent cores to Owner for installation.

D. Thresholds: Set thresholds for exterior doors and other doors indicated in full bed of sealant complying with requirements specified in Section 079200 "Joint Sealants."

E. Perimeter Gasketing: Apply to head and jamb, forming seal between door and frame.

1. Do not notch perimeter gasketing to install other surface-applied hardware.

F. Meeting Stile Gasketing: Fasten to meeting stiles, forming seal when doors are closed.

G. Door Bottoms: Apply to bottom of door, forming seal with threshold when door is closed.

3.4 FIELD QUALITY CONTROL

A. Independent Architectural Hardware Consultant: Engage a qualified independent Architectural Hardware Consultant to perform inspections and to prepare inspection reports.

Copyright © 2025 by the American Institute of Architects. Warning: This AIA MasterSpec-based document is protected by U.S. Copyright Law and International Treaties. It was created by "Michael Shilale Architects, LLP" for "Renovation of Rockland Green Administrative Headquarters and Construction of an Immersive Theatre Experience". A valid, current MasterSpec license is required for editing and use of this document for any other project.(22360)

1. Independent Architectural Hardware Consultant will inspect door hardware and state in each report whether installed work complies with or deviates from requirements, including whether door hardware is properly installed and adjusted.

3.5 ADJUSTING

A. Initial Adjustment: Adjust and check each operating item of door hardware and each door to ensure proper operation or function of every unit. Replace units that cannot be adjusted to operate as intended. Adjust door control devices to compensate for final operation of heating and ventilating equipment and to comply with referenced accessibility requirements.

1. Door Closers: Adjust sweep period to comply with accessibility requirements and requirements of authorities having jurisdiction.
2. Electric Strikes: Adjust horizontal and vertical alignment of keeper to properly engage lock bolt.

B. Occupancy Adjustment: Approximately six months after date of Substantial Completion, Installer's Architectural Hardware Consultant shall examine and readjust each item of door hardware, including adjusting operating forces, as necessary to ensure function of doors, door hardware, and electrified door hardware.

3.6 CLEANING AND PROTECTION

A. Clean adjacent surfaces soiled by door hardware installation.

B. Clean operating items as necessary to restore proper function and finish.

C. Provide final protection and maintain conditions that ensure that door hardware is without damage or deterioration at time of Substantial Completion.

3.7 MAINTENANCE SERVICE

A. Maintenance Tools and Instructions: Furnish a complete set of specialized tools and maintenance instructions for Owner's continued adjustment, maintenance, and removal and replacement of door hardware.

B. Maintenance Service: Beginning at Substantial Completion, maintenance service shall include six months' full maintenance by skilled employees of door hardware Installer. Include quarterly preventive maintenance, repair or replacement of worn or defective components, lubrication, cleaning, and adjusting as required for proper door and door hardware operation. Parts and supplies shall be manufacturer's authorized replacement parts and supplies.

3.8 DEMONSTRATION

A. Train Owner's maintenance personnel to adjust, operate, and maintain door hardware.

Copyright © 2025 by the American Institute of Architects. Warning: This AIA MasterSpec-based document is protected by U.S. Copyright Law and International Treaties. It was created by "Michael Shilale Architects, LLP" for "Renovation of Rockland Green Administrative Headquarters and Construction of an Immersive Theatre Experience". A valid, current MasterSpec license is required for editing and use of this document for any other project.(22360)

END OF SECTION 087100

Copyright © 2025 by the American Institute of Architects. Warning: This AIA MasterSpec-based document is protected by U.S. Copyright Law and International Treaties. It was created by "Michael Shilale Architects, LLP" for "Renovation of Rockland Green Administrative Headquarters and Construction of an Immersive Theatre Experience". A valid, current MasterSpec license is required for editing and use of this document for any other project.(22360)

SECTION 088000 - GLAZING

PART 1 - GENERAL

1.1 SUMMARY

A. Section Includes:

1. Glass products.
2. Laminated glass.
3. Insulating glass.
4. Glazing sealants.
5. Glazing tapes.
6. Miscellaneous glazing materials.

B. Related Requirements:

1. Section 088300 "Mirrors."
2. Section 088853 "Security Glazing."

1.2 DEFINITIONS

A. Glass Manufacturers: Firms that produce primary glass, fabricated glass, or both, as defined in referenced glazing publications.

B. Glass Thicknesses: Indicated by thickness designations in millimeters in accordance with ASTM C1036.

C. IBC: International Building Code.

D. Interspace: Space between lites of an insulating-glass unit.

1.3 COORDINATION

A. Coordinate glazing channel dimensions to provide necessary bite on glass, minimum edge and face clearances, and adequate sealant thicknesses, with reasonable tolerances to achieve proper safety margins for glazing retention under each design load case, load case combination, and service condition.

1.4 PREINSTALLATION MEETINGS

A. Preinstallation Conference: Conduct conference at Project site .

1. Review and finalize construction schedule and verify availability of materials, Installer's personnel, equipment, and facilities needed to make progress and avoid delays.

Copyright © 2025 by the American Institute of Architects. Warning: This AIA MasterSpec-based document is protected by U.S. Copyright Law and International Treaties. It was created by "Michael Shilale Architects, LLP" for "Renovation of Rockland Green Administrative Headquarters and Construction of an Immersive Theatre Experience". A valid, current MasterSpec license is required for editing and use of this document for any other project.(22360)

2. Review temporary protection requirements for glazing during and after installation.

1.5 ACTION SUBMITTALS

A. Product Data: For each type of product.

B. Glass Samples: For each type of the following products; 12 inches square.

1. Coated glass.
2. Laminated glass.
3. Insulating glass.

C. Glazing Accessory Samples: For sealants , in 12-inch lengths. Install sealant Samples between two strips of material representative in color of adjoining framing system.

D. Glazing Schedule: List glass types and thicknesses for each size opening and location. Use same designations indicated on Drawings.

E. Delegated Design Submittal: For glass indicated to comply with performance requirements and design criteria, including analysis data signed and sealed by qualified professional engineer responsible for their preparation.

1.6 INFORMATIONAL SUBMITTALS

A. Qualification Data: For Installer .

B. Preconstruction adhesion and compatibility test report.

C. Sample Warranties: For special warranties.

1.7 QUALITY ASSURANCE

A. Mockups: Build mockups to demonstrate aesthetic effects and to set quality standards for materials and execution.

1. Install glazing in mockups specified in Section 085113 "Aluminum Windows" to match glazing systems required for Project, including glazing methods.
2. Subject to compliance with requirements, approved mockups may become part of the completed Work if undisturbed at time of Substantial Completion.

1.8 PRECONSTRUCTION TESTING

A. Preconstruction Adhesion and Compatibility Testing: Test each glass product, tape sealant, gasket, glazing accessory, and glass-framing member for adhesion to and compatibility with elastomeric glazing sealants.

Copyright © 2025 by the American Institute of Architects. Warning: This AIA MasterSpec-based document is protected by U.S. Copyright Law and International Treaties. It was created by "Michael Shilale Architects, LLP" for "Renovation of Rockland Green Administrative Headquarters and Construction of an Immersive Theatre Experience". A valid, current MasterSpec license is required for editing and use of this document for any other project.(22360)

1. Testing is not required if data are submitted based on previous testing of current sealant products and glazing materials matching those submitted.
2. Use ASTM C1087 to determine whether priming and other specific joint-preparation techniques are required to obtain rapid, optimum adhesion of glazing sealants to glass, tape sealants, gaskets, and glazing channel substrates.
3. Test no fewer than eight Samples of each type of material, including joint substrates, shims, sealant backings, secondary seals, and miscellaneous materials.
4. Schedule enough time for testing and analyzing results to prevent delaying the Work.
5. For materials failing tests, submit sealant manufacturer's written instructions for corrective measures including use of specially formulated primers.

1.9 DELIVERY, STORAGE, AND HANDLING

A. Protect glazing materials in accordance with manufacturer's written instructions. Prevent damage to glass and glazing materials from condensation, temperature changes, direct exposure to sun, or other causes.

B. Comply with insulating-glass manufacturer's written instructions for venting and sealing units to avoid hermetic seal ruptures due to altitude change.

1.10 FIELD CONDITIONS

A. Environmental Limitations: Do not proceed with glazing when ambient and substrate temperature conditions are outside limits permitted by glazing material manufacturers and when glazing channel substrates are wet from rain, frost, condensation, or other causes.

1. Do not install glazing sealants when ambient and substrate temperature conditions are outside limits permitted by sealant manufacturer or are below 40 deg F.

1.11 WARRANTY

A. Manufacturer's Special Warranty for Coated-Glass Products: Manufacturer agrees to replace coated-glass units that deteriorate within specified warranty period. Deterioration of coated glass is defined as defects developed from normal use that are not attributed to glass breakage or to maintaining and cleaning coated glass contrary to manufacturer's written instructions. Defects include peeling, cracking, and other indications of deterioration in coating.

1. Warranty Period: 10 years from date of Substantial Completion.

B. Manufacturer's Special Warranty for Laminated Glass: Manufacturer agrees to replace laminated-glass units that deteriorate within specified warranty period. Deterioration of laminated glass is defined as defects developed from normal use that are not attributed to glass breakage or to maintaining and cleaning laminated glass contrary to manufacturer's written instructions. Defects include edge separation, delamination materially obstructing vision through glass, and blemishes exceeding those allowed by referenced laminated-glass standard.

1. Warranty Period: Five 10 years from date of Substantial Completion.

Copyright © 2025 by the American Institute of Architects. Warning: This AIA MasterSpec-based document is protected by U.S. Copyright Law and International Treaties. It was created by "Michael Shilale Architects, LLP" for "Renovation of Rockland Green Administrative Headquarters and Construction of an Immersive Theatre Experience". A valid, current MasterSpec license is required for editing and use of this document for any other project.(22360)

C. Manufacturer's Special Warranty for Insulating Glass: Manufacturer agrees to replace insulating-glass units that deteriorate within specified warranty period. Deterioration of insulating glass is defined as failure of hermetic seal under normal use that is not attributed to glass breakage or to maintaining and cleaning insulating glass contrary to manufacturer's written instructions. Evidence of failure is obstruction of vision by dust, moisture, or film on interior surfaces of glass.

1. Warranty Period: 10 years from date of Substantial Completion.

D. Manufacturer's Special Warranty for Heat-Soaked Tempered Glass: Manufacturer agrees to replace heat-soaked tempered glass units that spontaneously break due to nickel sulfide (NiS) inclusions at a rate exceeding 0.3 percent (3/1000) within specified warranty period. Coverage for any other cause is excluded.

1. Warranty Period: 10 years from date of Substantial Completion.

PART 2 - PRODUCTS

2.1 MANUFACTURERS

A. Source Limitations for Glass: Obtain coated glass from single source from single manufacturer.

B. Source Limitations for Glazing Accessories: For each product and installation method, obtain from single source from single manufacturer.

2.2 PERFORMANCE REQUIREMENTS

A. General: Installed glazing systems shall withstand normal thermal movement and wind and impact loads (where applicable) without failure, including loss or glass breakage attributable to defective manufacture, fabrication, or installation; failure of sealants or gaskets to remain watertight and airtight; deterioration of glazing materials; or other defects in construction.

B. Delegated Design: Engage a qualified professional engineer, as defined in Section 014000 "Quality Requirements," to design glazing.

C. Structural Performance: Glazing shall withstand the following design loads within limits and under conditions indicated determined in accordance with the IBC and ASTM E1300:

1. Design Wind Pressures: Determine design wind pressures applicable to Project in accordance with ASCE/SEI 7, based on heights above grade indicated on Drawings.
   a. Importance Factor: 1.5 .
2. Maximum Lateral Deflection: For glass supported on all four edges, limit center-of-glass deflection at design wind pressure to not more than 1/50 times the short-side length or 1 inch, whichever is less.
3. Thermal Loads: Design glazing to resist thermal stress breakage induced by differential temperature conditions and limited air circulation within individual glass lites and insulated glazing units.

Copyright © 2025 by the American Institute of Architects. Warning: This AIA MasterSpec-based document is protected by U.S. Copyright Law and International Treaties. It was created by "Michael Shilale Architects, LLP" for "Renovation of Rockland Green Administrative Headquarters and Construction of an Immersive Theatre Experience". A valid, current MasterSpec license is required for editing and use of this document for any other project.(22360)

D. Safety Glazing: Where safety glazing is indicated, provide glazing that complies with 16 CFR 1201, Category II.

E. Thermal and Optical Performance Properties: Provide glass with performance properties specified, as indicated in manufacturer's published test data, based on procedures indicated below:

1. For monolithic-glass lites, properties are based on units with lites 6 mm thick .
2. For laminated-glass lites, properties are based on products of construction indicated.
3. For insulating-glass units, properties are based on units of thickness indicated for overall unit and for each lite.
4. U-Factors: Center-of-glazing values, in accordance with NFRC 100 and based on most current non-beta version of LBL's WINDOW computer program, expressed as Btu/sq. ft. x h x deg F.
5. SHGC and Visible Transmittance: Center-of-glazing values, in accordance with NFRC 200 and based on most current non-beta version of LBL's WINDOW computer program.
6. Visible Reflectance: Center-of-glazing values, in accordance with NFRC 300.

2.3 GLASS PRODUCTS, GENERAL

A. Glazing Publications: Comply with published recommendations of glass product manufacturers and organizations below unless more stringent requirements are indicated. See these publications for glazing terms not otherwise defined in this Section or in referenced standards.

1. NGA Publications: "Laminated Glazing Reference Manual" and "Glazing Manual."
2. AAMA Publications: AAMA GDSG-1, "Glass Design for Sloped Glazing," and AAMA TIR A7, "Sloped Glazing Guidelines."
3. IGMA Publication for Sloped Glazing: IGMA TB-3001, "Guidelines for Sloped Glazing."
4. IGMA Publication for Insulating Glass: SIGMA TM-3000, "North American Glazing Guidelines for Sealed Insulating Glass Units for Commercial and Residential Use."

B. Safety Glazing Labeling: Where safety glazing is indicated, permanently mark glazing with certification label of the SGCC or another certification agency acceptable to authorities having jurisdiction or manufacturer. Label shall indicate manufacturer's name, type of glass, thickness, and safety glazing standard with which glass complies.

C. Thickness: Where glass thickness is indicated, it is a minimum. Provide glass that complies with performance requirements and is not less than thickness indicated.

1. Minimum Glass Thickness for Exterior Lites: 6 mm .

D. Strength: Where annealed float glass is indicated, provide annealed float glass, heat-strengthened float glass, or fully tempered float glass. Where heat-strengthened float glass is indicated, provide heat-strengthened float glass or fully tempered float glass. Where fully tempered float glass is indicated, provide fully tempered float glass.

Copyright © 2025 by the American Institute of Architects. Warning: This AIA MasterSpec-based document is protected by U.S. Copyright Law and International Treaties. It was created by "Michael Shilale Architects, LLP" for "Renovation of Rockland Green Administrative Headquarters and Construction of an Immersive Theatre Experience". A valid, current MasterSpec license is required for editing and use of this document for any other project.(22360)

2.4 GLASS PRODUCTS

A. Clear Annealed Float Glass: ASTM C1036, Type I, Class 1 (clear), Quality-Q3.

B. Low-Iron Annealed Float Glass: ASTM C1036, Type I, Class I (clear), Quality-Q3; and with visible light transmission of not less than 91 percent.

C. Fully Tempered Float Glass: ASTM C1048, Kind FT (fully tempered), Condition A (uncoated) unless otherwise indicated, Type I, Class 1 (clear) or Class 2 (tinted) as indicated, Quality-Q3.

1. Fabrication Process: By horizontal (roller-hearth) process with roll-wave distortion parallel to bottom edge of glass as installed unless otherwise indicated.

D. Pyrolytic-Coated, Low-Maintenance Glass: Clear float glass with coating on first surface having both photocatalytic and hydrophilic properties that act to loosen dirt and to cause water to sheet evenly over the glass instead of beading.

2.5 LAMINATED GLASS

A. Laminated Glass: ASTM C1172. Use materials that have a proven record of no tendency to bubble, discolor, or lose physical and mechanical properties after fabrication and installation.

1. Construction: Laminate glass with polyvinyl butyral interlayer or cast-in-place and cured-transparent-resin interlayer to comply with interlayer manufacturer's written instructions.
2. Interlayer Thickness: Provide thickness not less than that indicated and as needed to comply with requirements.
3. Interlayer Color: Clear unless otherwise indicated.

B. Windborne-Debris-Impact-Resistant Laminated Glass: Comply with requirements specified above for laminated glass except laminate glass with one of the following to comply with interlayer manufacturer's written instructions:

1. Construction: Laminate glass with polyvinyl butyral interlayer reinforced with polyethylene terephthalate film or cast-in-place and cured-transparent-resin interlayer reinforced with polyethylene terephthalate film to comply with interlayer manufacturer's written instructions.
2. Interlayer Thickness: Provide thickness not less than that indicated and as needed to comply with requirements.
3. Interlayer Color: Clear unless otherwise indicated.

2.6 INSULATING GLASS

A. Insulating-Glass Units: Factory-assembled units consisting of sealed lites of glass separated by a dehydrated interspace, qualified in accordance with ASTM E2190.

1. Sealing System: Dual seal, with manufacturer's standard primary and secondary sealants.
2. Perimeter Spacer: Manufacturer's standard spacer material and construction .
3. Desiccant: Molecular sieve or silica gel, or a blend of both.

Copyright © 2025 by the American Institute of Architects. Warning: This AIA MasterSpec-based document is protected by U.S. Copyright Law and International Treaties. It was created by "Michael Shilale Architects, LLP" for "Renovation of Rockland Green Administrative Headquarters and Construction of an Immersive Theatre Experience". A valid, current MasterSpec license is required for editing and use of this document for any other project.(22360)

2.7 GLAZING SEALANTS

A. General:

1. Compatibility: Compatible with one another and with other materials they contact, including glass products, seals of insulating-glass units, and glazing channel substrates, under conditions of service and application, as demonstrated by sealant manufacturer based on testing and field experience.
2. Suitability: Comply with sealant and glass manufacturers' written instructions for selecting glazing sealants suitable for applications indicated and for conditions existing at time of installation.
3. Colors of Exposed Glazing Sealants: As selected by Architect from manufacturer's full range of industry colors.

B. Neutral-Curing Silicone Glazing Sealant, Class 100/50: Complying with ASTM C920, Type S, Grade NS, Use NT.

2.8 GLAZING TAPES

A. Back-Bedding Mastic Glazing Tapes: Preformed, butyl-based, 100 percent solids elastomeric tape; nonstaining and nonmigrating in contact with nonporous surfaces; with or without spacer rod as recommended in writing by tape and glass manufacturers for application indicated; and complying with ASTM C1281 and AAMA 800 for products indicated below:

1. AAMA 804.3 tape, where indicated.
2. AAMA 806.3 tape, for glazing applications in which tape is subject to continuous pressure.
3. AAMA 807.3 tape, for glazing applications in which tape is not subject to continuous pressure.

2.9 MISCELLANEOUS GLAZING MATERIALS

A. General: Provide products of material, size, and shape complying with referenced glazing standard, recommended in writing by manufacturers of glass and other glazing materials for application indicated, and with a proven record of compatibility with surfaces contacted in installation.

B. Cleaners, Primers, and Sealers: Types recommended by sealant or gasket manufacturer.

C. Setting Blocks:

1. EPDM with Shore A durometer hardness of 85, plus or minus 5.
2. Type recommended in writing by sealant or glass manufacturer.

D. Spacers:

1. Neoprene blocks or continuous extrusions of hardness required by glass manufacturer to maintain glass lites in place for installation indicated.

Copyright © 2025 by the American Institute of Architects. Warning: This AIA MasterSpec-based document is protected by U.S. Copyright Law and International Treaties. It was created by "Michael Shilale Architects, LLP" for "Renovation of Rockland Green Administrative Headquarters and Construction of an Immersive Theatre Experience". A valid, current MasterSpec license is required for editing and use of this document for any other project.(22360)

2. Type recommended in writing by sealant or glass manufacturer.

E. Edge Blocks:

1. EPDM with Shore A durometer hardness per manufacturer's written instructions.
2. Type recommended in writing by sealant or glass manufacturer.

F. Cylindrical Glazing Sealant Backing: ASTM C1330, Type O (open-cell material), of size and density to control glazing sealant depth and otherwise produce optimum glazing sealant performance.

2.10 FABRICATION OF GLAZING UNITS

A. Fabricate glazing units in sizes required to fit openings indicated for Project, with edge and face clearances, edge and surface conditions, and bite complying with written instructions of product manufacturer and referenced glazing publications, to comply with system performance requirements.

1. Allow for thermal movements from ambient and surface temperature changes acting on glass framing members and glazing components.
   a. Temperature Change: 120 deg F , ambient; 180 deg F , material surfaces .

B. Clean-cut or flat-grind vertical edges of butt-glazed monolithic lites to produce square edges with slight chamfers at junctions of edges and faces.

C. Grind smooth and polish exposed glass edges and corners.

PART 3 - EXECUTION

3.1 EXAMINATION

A. Examine framing, glazing channels, and stops, with Installer present, for compliance with the following:

1. Manufacturing and installation tolerances, including those for size, squareness, and offsets at corners.
2. Presence and functioning of weep systems.
3. Minimum required face and edge clearances.
4. Effective sealing between joints of glass-framing members.

B. Proceed with installation only after unsatisfactory conditions have been corrected.

3.2 PREPARATION

A. Clean glazing channels and other framing members receiving glass immediately before glazing. Remove coatings not firmly bonded to substrates.

Copyright © 2025 by the American Institute of Architects. Warning: This AIA MasterSpec-based document is protected by U.S. Copyright Law and International Treaties. It was created by "Michael Shilale Architects, LLP" for "Renovation of Rockland Green Administrative Headquarters and Construction of an Immersive Theatre Experience". A valid, current MasterSpec license is required for editing and use of this document for any other project.(22360)

B. Examine glazing units to locate exterior and interior surfaces. Label or mark units as needed so that exterior and interior surfaces are readily identifiable. Do not use materials that leave visible marks in the completed Work.

3.3 GLAZING, GENERAL

A. Comply with combined written instructions of manufacturers of glass, sealants, gaskets, and other glazing materials, unless more stringent requirements are indicated, including those in referenced glazing publications.

B. Protect glass edges from damage during handling and installation. Remove damaged glass from Project site and legally dispose of off Project site. Damaged glass includes glass with edge damage or other imperfections that, when installed, could weaken glass, impair performance, or impair appearance.

C. Apply primers to joint surfaces where required for adhesion of sealants, as determined by preconstruction testing.

D. Install setting blocks in sill rabbets, sized and located to comply with referenced glazing publications, unless otherwise required by glass manufacturer. Set blocks in thin course of compatible sealant suitable for heel bead.

E. Do not exceed edge pressures stipulated by glass manufacturers for installing glass lites.

F. Provide spacers for glass lites where length plus width is larger than 50 inches.

1. Locate spacers directly opposite each other on both inside and outside faces of glass. Install correct size and spacing to preserve required face clearances, unless gaskets and glazing tapes are used that have demonstrated ability to maintain required face clearances and to comply with system performance requirements.
2. Provide 1/8-inch- minimum bite of spacers on glass and use thickness equal to sealant width. With glazing tape, use thickness slightly less than final compressed thickness of tape.

G. Provide edge blocking where indicated or needed to prevent glass lites from moving sideways in glazing channel, as recommended in writing by glass manufacturer and in accordance with requirements in referenced glazing publications.

H. Set glass lites in each series with uniform pattern, draw, bow, and similar characteristics.

I. Set glass lites with proper orientation so that coatings face exterior or interior as specified.

J. Where wedge-shaped gaskets are driven into one side of channel to pressurize sealant or gasket on opposite side, provide adequate anchorage so gasket cannot walk out when installation is subjected to movement.

K. Square cut wedge-shaped gaskets at corners and install gaskets in a manner recommended by gasket manufacturer to prevent corners from pulling away; seal corner joints and butt joints with sealant recommended in writing by gasket manufacturer.

Copyright © 2025 by the American Institute of Architects. Warning: This AIA MasterSpec-based document is protected by U.S. Copyright Law and International Treaties. It was created by "Michael Shilale Architects, LLP" for "Renovation of Rockland Green Administrative Headquarters and Construction of an Immersive Theatre Experience". A valid, current MasterSpec license is required for editing and use of this document for any other project.(22360)

3.4 TAPE GLAZING

A. Position tapes on fixed stops so that, when compressed by glass, their exposed edges are flush with or protrude slightly above sightline of stops.

B. Install tapes continuously, but not necessarily in one continuous length. Do not stretch tapes to make them fit opening.

C. Cover vertical framing joints by applying tapes to heads and sills first, then to jambs. Cover horizontal framing joints by applying tapes to jambs, then to heads and sills.

D. Place joints in tapes at corners of opening with adjoining lengths butted together, not lapped. Seal joints in tapes with compatible sealant approved by tape manufacturer.

E. Do not remove release paper from tape until right before each glazing unit is installed.

F. Apply heel bead of elastomeric sealant.

G. Center glass lites in openings on setting blocks, and press firmly against tape by inserting dense compression gaskets formed and installed to lock in place against faces of removable stops. Start gasket applications at corners and work toward centers of openings.

H. Apply cap bead of elastomeric sealant over exposed edge of tape.

3.5 SEALANT GLAZING (WET)

A. Install continuous spacers, or spacers combined with cylindrical sealant backing, between glass lites and glazing stops to maintain glass face clearances and to prevent sealant from extruding into glass channel and blocking weep systems until sealants cure. Secure spacers or spacers and backings in place and in position to control depth of installed sealant relative to edge clearance for optimum sealant performance.

B. Force sealants into glazing channels to eliminate voids and to ensure complete wetting or bond of sealant to glass and channel surfaces.

C. Tool exposed surfaces of sealants to provide a substantial wash away from glass.

3.6 CLEANING AND PROTECTION

A. Immediately after installation, remove nonpermanent labels and clean surfaces.

B. Protect glass from contact with contaminating substances resulting from construction operations. Examine glass surfaces adjacent to or below exterior concrete and other masonry surfaces at frequent intervals during construction, but not less than once a month, for buildup of dirt, scum, alkaline deposits, or stains.

Copyright © 2025 by the American Institute of Architects. Warning: This AIA MasterSpec-based document is protected by U.S. Copyright Law and International Treaties. It was created by "Michael Shilale Architects, LLP" for "Renovation of Rockland Green Administrative Headquarters and Construction of an Immersive Theatre Experience". A valid, current MasterSpec license is required for editing and use of this document for any other project.(22360)

1. If, despite such protection, contaminating substances do contact with glass, remove substances immediately as recommended in writing by glass manufacturer. Remove and replace glass that cannot be cleaned without damage to coatings.

C. Remove and replace glass that is damaged during construction period.

D. Wash glass on both exposed surfaces not more than four days before date scheduled for inspections that establish date of Substantial Completion. Wash glass as recommended in writing by glass manufacturer.

3.7 LAMINATED GLASS SCHEDULE

A. Clear Laminated Glass Type : Two plies of low-iron fully tempered float glass.

1. Minimum Thickness of Each Glass Ply: 4 mm .
2. Interlayer Thickness: 0.060 inch .
3. Safety glazing required.

B. Low-E-Coated, Laminated Vision Glass Type : Two plies of clear fully tempered float glass.

1. Minimum Thickness of Each Glass Ply: 4 mm .
2. Interlayer Thickness: 0.060 inch .
3. Low-E Coating: Pyrolytic or sputtered on second or third surface.
4. Safety glazing required.

3.8 INSULATING-LAMINATED-GLASS SCHEDULE

A. Low-E-Coated, Clear Insulating Laminated Glass Type :

1. Overall Unit Thickness: 1 inch .
2. Minimum Thickness of Outdoor Lite: 4 mm .
3. Outdoor Lite: Clear fully tempered float glass.
4. Interspace Content: Argon.
5. Indoor Lite: Clear laminated glass with two plies of annealed float glass.
   a. Minimum Thickness of Each Glass Ply: 4 mm .
   b. Interlayer Thickness: 0.060 inch .
6. Low-E Coating: Pyrolytic or sputtered on second or third surface.
7. Safety glazing required.

END OF SECTION 088000

Copyright © 2025 by the American Institute of Architects. Warning: This AIA MasterSpec-based document is protected by U.S. Copyright Law and International Treaties. It was created by "Michael Shilale Architects, LLP" for "Renovation of Rockland Green Administrative Headquarters and Construction of an Immersive Theatre Experience". A valid, current MasterSpec license is required for editing and use of this document for any other project.(22360)

SECTION 092216 - NON-STRUCTURAL METAL FRAMING

PART 1 - GENERAL

1.1 SUMMARY

A. Section Includes:

1. Framing systems.
2. Grid suspension systems.

B. Related Requirements:

1. Section 054000 "Cold-Formed Metal Framing" for exterior and interior load-bearing and exterior non-load-bearing wall studs; floor joists; and roof rafters and ceiling joists.

1.2 ACTION SUBMITTALS

A. Product Data:

1. Framing systems.
2. Grid suspension systems.

1.3 INFORMATIONAL SUBMITTALS

A. Evaluation Reports: For firestop tracks , from ICC-ES or other qualified testing agency acceptable to authorities having jurisdiction.

1.4 QUALITY ASSURANCE

A. Code-Compliance Certification of Studs and Tracks: Provide documentation that framing members are certified according to the product-certification program of the Steel Stud Manufacturers Association .

1.5 DELIVERY, STORAGE, AND HANDLING

A. Notify manufacturer of damaged materials received prior to installation.

B. Deliver materials in manufacturer's original, unopened, undamaged containers with identification labels intact.

C. Protect cold-formed metal framing from corrosion, deformation, and other damage during delivery, storage, and handling as required by AISI S202, "Code of Standard Practice for Cold-Formed Steel Structural Framing."

Copyright © 2025 by the American Institute of Architects. Warning: This AIA MasterSpec-based document is protected by U.S. Copyright Law and International Treaties. It was created by "Michael Shilale Architects, LLP" for "Renovation of Rockland Green Administrative Headquarters and Construction of an Immersive Theatre Experience". A valid, current MasterSpec license is required for editing and use of this document for any other project.(22360)

PART 2 - PRODUCTS

2.1 PERFORMANCE REQUIREMENTS

A. Fire-Test-Response Characteristics: For fire-resistance-rated assemblies that incorporate non-load-bearing steel framing, provide materials and construction identical to those tested in assembly indicated, in accordance with ASTM E119 by an independent testing agency.

B. STC-Rated Assemblies: For STC-rated assemblies, provide materials and construction identical to those tested in assembly indicated on Drawings, in accordance with ASTM E90 and classified in accordance with ASTM E413 by an independent testing agency.

C. Horizontal Deflection: For composite wall assemblies, limited to 1/240 of the wall height based on horizontal loading of 10 lbf/sq. ft. .

D. Design framing systems in accordance with AISI S220, "North American Specification for the Design of Cold-Formed Steel Framing - Nonstructural Members," unless otherwise indicated.

E. Design Loads: As indicated on architectural Drawings or 5 lbf/sq. ft. minimum as required by the IBC.

2.2 FRAMING SYSTEMS

A. Studs and Track: ASTM C645 .

1. Manufacturers: Subject to compliance with requirements, provide products by one of the following:
   a. ClarkDietrich.
   b. Marino\WARE.
   c. MBA Building Supplies.
   d. Steel Network, Inc. (The).
2. Minimum Base-Steel Thickness: As required by performance requirements for horizontal deflection .
3. Depth: As indicated on Drawings .

B. Slip-Type Head Joints: Where indicated, provide one of the following:

1. Single Long-Leg Track System: Top track with 2-inch- deep flanges in thickness not less than indicated for studs, installed with studs friction fit into top track and with continuous bridging located within 12 inches of the top of studs to provide lateral bracing.
2. Double-Track System: Top outer tracks, inside track with 2-inch- deep flanges in thickness not less than indicated for studs and fastened to studs, and outer track sized to friction-fit over inner track.
3. Deflection Track: Steel sheet top track manufactured to prevent cracking of finishes applied to interior partition framing resulting from deflection of structure above; in thickness not less than indicated for studs and in width to accommodate depth of studs.

Copyright © 2025 by the American Institute of Architects. Warning: This AIA MasterSpec-based document is protected by U.S. Copyright Law and International Treaties. It was created by "Michael Shilale Architects, LLP" for "Renovation of Rockland Green Administrative Headquarters and Construction of an Immersive Theatre Experience". A valid, current MasterSpec license is required for editing and use of this document for any other project.(22360)

C. Firestop Tracks: Top track manufactured to allow partition heads to expand and contract with movement of structure while maintaining continuity of fire-resistance-rated assembly indicated; in thickness not less than indicated for studs and in width to accommodate depth of studs.

D. Flat Strap and Backing Plate: Steel sheet for blocking and bracing in length and width indicated.

1. Minimum Base-Steel Thickness: 0.0296 inch .

E. Cold-Rolled Channel Bridging: Steel, 0.0538-inch minimum base-steel thickness, with minimum 1/2-inch- wide flanges.

1. Depth: 1-1/2 inches .
2. Clip Angle: Not less than 1-1/2 by 1-1/2 inches, 0.068-inch- thick, galvanized steel.

F. Hat-Shaped, Rigid Furring Channels:

1. Manufacturers: Subject to compliance with requirements, provide products by one of the following:
   a. ClarkDietrich.
   b. Marino\WARE.
   c. Steel Network, Inc. (The).
2. Minimum Base-Steel Thickness: 0.0296 inch .
3. Depth: 7/8 inch .

G. Resilient Furring Channels: 1/2-inch- deep, steel sheet members designed to reduce sound transmission.

1. Manufacturers: Subject to compliance with requirements, provide products by one of the following:
   a. ClarkDietrich.
   b. Marino\WARE.
   c. Steel Network, Inc. (The).
2. Configuration: hat shaped.

H. Cold-Rolled Furring Channels: 0.053-inch uncoated-steel thickness, with minimum 1/2-inch-wide flanges.

1. Depth: As indicated on Drawings .
2. Furring Brackets: Adjustable, corrugated-edge-type steel sheet with minimum uncoated-steel thickness of 0.0329 inch.
3. Tie Wire: ASTM A641/A641M, Class 1 zinc coating, soft temper, 0.062-inch- diameter wire, or double strand of 0.048-inch- diameter wire.

I. Z-Shaped Furring: With slotted or nonslotted web, face flange of 1-1/4 inches, wall attachment flange of 3/4 inch, minimum uncoated-steel thickness of 0.0179 inch, and depth required to fit insulation thickness indicated.

1. Manufacturers: Subject to compliance with requirements, provide products by one of the following:
   a. ClarkDietrich.

Copyright © 2025 by the American Institute of Architects. Warning: This AIA MasterSpec-based document is protected by U.S. Copyright Law and International Treaties. It was created by "Michael Shilale Architects, LLP" for "Renovation of Rockland Green Administrative Headquarters and Construction of an Immersive Theatre Experience". A valid, current MasterSpec license is required for editing and use of this document for any other project.(22360)

b. Marino\WARE.
c. Steel Network, Inc. (The).

2.3 GRID SUSPENSION SYSTEMS

A. Grid Suspension Systems for Gypsum Board Ceilings: ASTM C645, direct-hung system composed of main beams and cross-furring members that interlock.

1. Manufacturers: Subject to compliance with requirements, provide products by one of the following:
   a. Armstrong World Industries.
   b. CertainTeed; SAINT-GOBAIN.
   c. USG Corporation.

PART 3 - EXECUTION

3.1 EXAMINATION

A. Examine areas and substrates, with Installer present, and including welded hollow-metal frames, cast-in anchors, and structural framing, for compliance with requirements and other conditions affecting performance of the Work.

B. Proceed with installation only after unsatisfactory conditions have been corrected.

3.2 PREPARATION

A. Suspended Assemblies: Coordinate installation of suspension systems with installation of overhead structure to ensure that inserts and other provisions for anchorages to building structure have been installed to receive hangers at spacing required to support the Work and that hangers will develop their full strength.

1. Furnish concrete inserts and other devices indicated to other trades for installation in advance of time needed for coordination and construction.

B. Coordination with Sprayed Fire-Resistive Materials:

1. Before sprayed fire-resistive materials are applied, attach offset anchor plates or ceiling tracks to surfaces indicated to receive sprayed fire-resistive materials. Where offset anchor plates are required, provide continuous plates fastened to building structure not more than 24 inches o.c.
2. After sprayed fire-resistive materials are applied, remove them only to extent necessary for installation of non-load-bearing steel framing. Do not reduce thickness of fire-resistive materials below that are required for fire-resistance ratings indicated. Protect adjacent fire-resistive materials from damage.

Copyright © 2025 by the American Institute of Architects. Warning: This AIA MasterSpec-based document is protected by U.S. Copyright Law and International Treaties. It was created by "Michael Shilale Architects, LLP" for "Renovation of Rockland Green Administrative Headquarters and Construction of an Immersive Theatre Experience". A valid, current MasterSpec license is required for editing and use of this document for any other project.(22360)

3.3 INSTALLATION, GENERAL

A. Installation Standard: ASTM C754.

1. Gypsum Plaster Assemblies: Also comply with requirements in ASTM C841 that apply to framing installation.
2. Portland Cement Plaster Assemblies: Also comply with requirements in ASTM C1063 that apply to framing installation.
3. Gypsum Veneer Plaster Assemblies: Also comply with requirements in ASTM C844 that apply to framing installation.
4. Gypsum Board Assemblies: Also comply with requirements in ASTM C840 that apply to framing installation.

B. Install framing and accessories plumb, square, and true to line, with connections securely fastened.

C. Install supplementary framing, and blocking to support fixtures, equipment services, heavy trim, grab bars, toilet accessories, furnishings, or similar construction.

D. Install bracing at terminations in assemblies.

E. Do not bridge building control and expansion joints with non-load-bearing steel framing members. Frame both sides of joints independently.

3.4 INSTALLATION OF FRAMING SYSTEMS

A. Install framing system components according to spacings indicated, but not greater than spacings required by referenced installation standards for assembly types.

1. Single-Layer Application: 16 inches o.c. unless otherwise indicated.
2. Multilayer Application: 16 inches o.c. unless otherwise indicated.

B. Where studs are installed directly against exterior masonry walls or dissimilar metals at exterior walls, install isolation strip between studs and exterior wall.

C. Install studs so flanges within framing system point in same direction.

D. Install tracks at floors and overhead supports. Extend framing full height to structural supports or substrates above suspended ceilings except where partitions are indicated to terminate at suspended ceilings. Continue framing around ducts that penetrate partitions above ceiling.

1. Slip-Type Head Joints: Where framing extends to overhead structural supports, install to produce joints at tops of framing systems that prevent axial loading of finished assemblies.
2. Door Openings: Screw vertical studs at jambs to jamb anchor clips on door frames; install track section (for cripple studs) at head and secure to jamb studs.
   a. Install two studs at each jamb unless otherwise indicated.

Copyright © 2025 by the American Institute of Architects. Warning: This AIA MasterSpec-based document is protected by U.S. Copyright Law and International Treaties. It was created by "Michael Shilale Architects, LLP" for "Renovation of Rockland Green Administrative Headquarters and Construction of an Immersive Theatre Experience". A valid, current MasterSpec license is required for editing and use of this document for any other project.(22360)

b. Install cripple studs at head adjacent to each jamb stud, with a minimum 1/2-inch clearance from jamb stud to allow for installation of control joint in finished assembly.
c. Extend jamb studs through suspended ceilings and attach to underside of overhead structure.

3. Other Framed Openings: Frame openings other than door openings the same as required for door openings unless otherwise indicated. Install framing below sills of openings to match framing required above door heads.
4. Fire-Resistance-Rated Partitions: Install framing to comply with fire-resistance-rated assembly indicated and support closures and to make partitions continuous from floor to underside of solid structure.
   a. Firestop Track: Where indicated, install to maintain continuity of fire-resistance-rated assembly indicated.
5. Sound-Rated Partitions: Install framing to comply with sound-rated assembly indicated.

E. Direct Furring:

1. Screw to wood framing.
2. Attach to concrete or masonry with stub nails, screws designed for masonry attachment, or powder-driven fasteners spaced 24 inches o.c.

F. Z-Shaped Furring Members:

1. Erect insulation, specified in Section 072100 "Thermal Insulation," vertically and hold in place with Z-shaped furring members spaced 16" o.c.
2. Except at exterior corners, securely attach narrow flanges of furring members to wall with concrete stub nails, screws designed for masonry attachment, or powder-driven fasteners spaced 24 inches o.c.
3. At exterior corners, attach wide flange of furring members to wall with short flange extending beyond corner; on adjacent wall surface, screw-attach short flange of furring channel to web of attached channel. At interior corners, space second member no more than 12 inches from corner and cut insulation to fit.

G. Installation Tolerance: Install each framing member so fastening surfaces vary not more than 1/8 inch from the plane formed by faces of adjacent framing.

3.5 INSTALLATION OF GRID SUSPENSION SYSTEMS

A. Grid Suspension Systems: Attach perimeter wall track or angle where grid suspension systems meet vertical surfaces. Mechanically join main beam and cross-furring members to each other and butt-cut to fit into wall track.

3.6 FIELD QUALITY CONTROL

A. Installation Tolerances: Install suspension systems that are level to within measured lengthwise on each member that will receive finishes and transversely between parallel members that will receive finishes.

Copyright © 2025 by the American Institute of Architects. Warning: This AIA MasterSpec-based document is protected by U.S. Copyright Law and International Treaties. It was created by "Michael Shilale Architects, LLP" for "Renovation of Rockland Green Administrative Headquarters and Construction of an Immersive Theatre Experience". A valid, current MasterSpec license is required for editing and use of this document for any other project.(22360)

END OF SECTION 092216

Copyright © 2025 by the American Institute of Architects. Warning: This AIA MasterSpec-based document is protected by U.S. Copyright Law and International Treaties. It was created by "Michael Shilale Architects, LLP" for "Renovation of Rockland Green Administrative Headquarters and Construction of an Immersive Theatre Experience". A valid, current MasterSpec license is required for editing and use of this document for any other project.(22360)

SECTION 092900 - GYPSUM BOARD

PART 1 - GENERAL

1.1 SUMMARY

A. Section Includes:

1. Interior gypsum board.

B. Related Requirements:

1. Section 061600 "Sheathing" for gypsum sheathing for exterior walls.
2. Section 092216 "Non-Structural Metal Framing" for non-structural steel framing and suspension systems that support gypsum board panels.

1.2 ACTION SUBMITTALS

A. Product Data: For the following:

1. Gypsum wallboard.
2. Gypsum board, Type X.
3. Mold-resistant gypsum board.
4. Glass-mat, water-resistant backing board.
5. Cementitious backer units.
6. Water-resistant gypsum backing board.
7. Interior trim.
8. Joint treatment materials.
9. Laminating adhesive.

B. Samples for Initial Selection: For each type of trim accessory indicated.

1.3 MOCKUPS

A. Build mockups of at least 100 sq. ft. in surface area to demonstrate aesthetic effects and to set quality standards for materials and execution.

1. Build mockups for the following:
   a. Each level of gypsum board finish indicated for use in exposed locations.
2. Subject to compliance with requirements, approved mockups may become part of the completed Work if undisturbed at time of Substantial Completion.

Copyright © 2025 by the American Institute of Architects. Warning: This AIA MasterSpec-based document is protected by U.S. Copyright Law and International Treaties. It was created by "Michael Shilale Architects, LLP" for "Renovation of Rockland Green Administrative Headquarters and Construction of an Immersive Theatre Experience". A valid, current MasterSpec license is required for editing and use of this document for any other project.(22360)

1.4 DELIVERY, STORAGE AND HANDLING

A. Store materials inside under cover and keep them dry and protected against weather, condensation, direct sunlight, construction traffic, and other potential causes of damage. Stack panels flat and supported on risers on a flat platform to prevent sagging.

1.5 FIELD CONDITIONS

A. Environmental Limitations: Comply with ASTM C840 requirements or gypsum board manufacturer's written instructions, whichever are more stringent.

B. Do not install paper-faced gypsum panels until installation areas are enclosed and conditioned.

C. Do not install panels that are wet, moisture damaged, and mold damaged.

1. Indications that panels are wet or moisture damaged include, but are not limited to, discoloration, sagging, or irregular shape.
2. Indications that panels are mold damaged include, but are not limited to, fuzzy or splotchy surface contamination and discoloration.

PART 2 - PRODUCTS

2.1 SOURCE LIMITATIONS

A. Obtain each type of gypsum panel and joint finishing material from single source with resources to provide products of consistent quality in appearance and physical properties.

2.2 PERFORMANCE REQUIREMENTS

A. STC-Rated Assemblies: For STC-rated assemblies, provide materials and construction identical to those tested in assembly indicated according to ASTM E90 and classified according to ASTM E413 by an independent testing agency.

2.3 GYPSUM BOARD, GENERAL

A. Size: Provide maximum lengths and widths available that will minimize joints in each area and that correspond with support system indicated.

2.4 INTERIOR GYPSUM BOARD

A. Gypsum Wallboard: ASTM C1396/C1396M.

1. Thickness: 1/2 inch.
2. Long Edges: Tapered and featured (rounded or beveled) for prefilling.

Copyright © 2025 by the American Institute of Architects. Warning: This AIA MasterSpec-based document is protected by U.S. Copyright Law and International Treaties. It was created by "Michael Shilale Architects, LLP" for "Renovation of Rockland Green Administrative Headquarters and Construction of an Immersive Theatre Experience". A valid, current MasterSpec license is required for editing and use of this document for any other project.(22360)

B. Gypsum Board, Type X: ASTM C1396/C1396M.

1. Thickness: 5/8 inch.
2. Long Edges: Tapered and featured (rounded or beveled) for prefilling.

C. Mold-Resistant Gypsum Board: ASTM C1396/C1396M. With moisture- and mold-resistant core and paper surfaces.

1. Core: As indicated on Drawings .
2. Long Edges: Tapered.
3. Mold Resistance: ASTM D3273, score of 10 as rated according to ASTM D3274.

2.5 TRIM ACCESSORIES

A. Interior Trim: ASTM C1047.

1. Material: Galvanized or aluminum-coated steel sheet, rolled zinc, plastic, or paper-faced galvanized-steel sheet .
2. Shapes:
   a. Cornerbead.
   b. Bullnose bead.
   c. LC-Bead: J-shaped; exposed long flange receives joint compound.
   d. L-Bead: L-shaped; exposed long flange receives joint compound.
   e. U-Bead: J-shaped; exposed short flange does not receive joint compound.
   f. Expansion (control) joint.
   g. Curved-Edge Cornerbead: With notched or flexible flanges.
   h. Base-of-Wall Galvanized Moisture Barrier Trim: Galvanized-steel sheet, 2 inches high.
   i. Base-of-Wall PVC Moisture Barrier Trim: Extruded PVC, 1-3/4 inch high.

B. Exterior Trim: ASTM C1047.

1. Material: Hot-dip galvanized-steel sheet, plastic, or rolled zinc .
2. Shapes:
   a. Cornerbead.
   b. LC-Bead: J-shaped; exposed long flange receives joint compound.
   c. Expansion (Control) Joint: One-piece, rolled zinc with V-shaped slot and removable strip covering slot opening.

2.6 JOINT TREATMENT MATERIALS

A. General: Comply with ASTM C475/C475M.

B. Joint Tape:

1. Interior Gypsum Board: Paper.
2. Exterior Gypsum Soffit Board: Paper.
3. Glass-Mat Gypsum Sheathing Board: 10-by-10 glass mesh.

Copyright © 2025 by the American Institute of Architects. Warning: This AIA MasterSpec-based document is protected by U.S. Copyright Law and International Treaties. It was created by "Michael Shilale Architects, LLP" for "Renovation of Rockland Green Administrative Headquarters and Construction of an Immersive Theatre Experience". A valid, current MasterSpec license is required for editing and use of this document for any other project.(22360)

C. Joint Compound for Interior Gypsum Board: For each coat, use formulation that is compatible with other compounds applied on previous or for successive coats.

1. Prefilling: At open joints , rounded or beveled panel edges, and damaged surface areas, use setting-type taping compound.
2. Embedding and First Coat: For embedding tape and first coat on joints, fasteners, and trim flanges, use setting-type taping compound.
   a. Use setting-type compound for installing paper-faced metal trim accessories.
3. Fill Coat: For second coat, use setting-type, sandable topping compound.
4. Finish Coat: For third coat, use drying-type, all-purpose compound.

2.7 AUXILIARY MATERIALS

A. Provide auxiliary materials that comply with referenced installation standards and manufacturer's written instructions.

B. Laminating Adhesive: Adhesive or joint compound recommended for directly adhering gypsum panels to continuous substrate.

C. Steel Drill Screws: ASTM C1002 unless otherwise indicated.

1. Use screws complying with ASTM C954 for fastening panels to steel members from 0.033 to 0.112 inch thick.
2. For fastening cementitious backer units, use screws of type and size recommended by panel manufacturer.

D. Sound-Attenuation Blankets: ASTM C665, Type I (blankets without membrane facing) produced by combining thermosetting resins with mineral fibers manufactured from glass, slag wool, or rock wool.

1. Fire-Resistance-Rated Assemblies: Comply with mineral-fiber requirements of assembly.

E. Thermal Insulation: As specified in Section 072100 "Thermal Insulation."

PART 3 - EXECUTION

3.1 EXAMINATION

A. Examine areas and substrates including welded hollow-metal frames and support framing, with Installer present, for compliance with requirements and other conditions affecting performance of the Work.

B. Examine panels before installation. Reject panels that are wet, moisture damaged, and mold damaged.

C. Proceed with installation only after unsatisfactory conditions have been corrected.

Copyright © 2025 by the American Institute of Architects. Warning: This AIA MasterSpec-based document is protected by U.S. Copyright Law and International Treaties. It was created by "Michael Shilale Architects, LLP" for "Renovation of Rockland Green Administrative Headquarters and Construction of an Immersive Theatre Experience". A valid, current MasterSpec license is required for editing and use of this document for any other project.(22360)

3.2 INSTALLATION AND FINISHING OF PANELS, GENERAL

A. Comply with ASTM C840.

B. Install ceiling panels across framing to minimize the number of abutting end joints and to avoid abutting end joints in central area of each ceiling. Stagger abutting end joints of adjacent panels not less than one framing member.

C. Install panels with face side out. Butt panels together for a light contact at edges and ends with not more than 1/16 inch of open space between panels. Do not force into place.

D. Locate edge and end joints over supports, except in ceiling applications where intermediate supports or gypsum board back-blocking is provided behind end joints. Do not place tapered edges against cut edges or ends. Stagger vertical joints on opposite sides of partitions. Do not make joints other than control joints at corners of framed openings.

E. Form control and expansion joints with space between edges of adjoining gypsum panels.

F. Cover both faces of support framing with gypsum panels in concealed spaces (above ceilings, etc.), except in chases braced internally.

1. Unless concealed application is indicated or required for sound, fire, air, or smoke ratings, coverage may be accomplished with scraps of not less than 8 sq. ft. in area.
2. Fit gypsum panels around ducts, pipes, and conduits.
3. Where partitions intersect structural members projecting below underside of floor/roof slabs and decks, cut gypsum panels to fit profile formed by structural members; allow 1/4- to 3/8-inch- wide joints to install sealant.

G. Isolate perimeter of gypsum board applied to non-load-bearing partitions at structural abutments. Provide 1/4- to 1/2-inch- wide spaces at these locations and trim edges with edge trim where edges of panels are exposed. Seal joints between edges and abutting structural surfaces with acoustical sealant.

H. Attachment to Steel Framing: Attach panels so leading edge or end of each panel is attached to open (unsupported) edges of stud flanges first.

I. Wood Framing: Install gypsum panels over wood framing, with floating internal corner construction. Do not attach gypsum panels across the flat grain of wide-dimension lumber, including floor joists and headers. Float gypsum panels over these members or provide control joints to counteract wood shrinkage.

J. STC-Rated Assemblies: Seal construction at perimeters, behind control joints, and at openings and penetrations with a continuous bead of acoustical sealant. Install acoustical sealant at both faces of partitions at perimeters and through penetrations. Comply with ASTM C919 and with manufacturer's written instructions for locating edge trim and closing off sound-flanking paths around or through assemblies, including sealing partitions above acoustical ceilings.

K. Install sound attenuation blankets before installing gypsum panels unless blankets are readily installed after panels have been installed on one side.

Copyright © 2025 by the American Institute of Architects. Warning: This AIA MasterSpec-based document is protected by U.S. Copyright Law and International Treaties. It was created by "Michael Shilale Architects, LLP" for "Renovation of Rockland Green Administrative Headquarters and Construction of an Immersive Theatre Experience". A valid, current MasterSpec license is required for editing and use of this document for any other project.(22360)

3.3 INSTALLATION OF INTERIOR GYPSUM BOARD

A. Install interior gypsum board in the following locations:

1. Wallboard Type: As indicated on Drawings .
2. Type X: Where required for fire-resistance-rated assembly .
3. Mold-Resistant Type: As indicated on Drawings .

B. Single-Layer Application:

1. On ceilings, apply gypsum panels before wall/partition board application to greatest extent possible and at right angles to framing unless otherwise indicated.
2. On partitions/walls, apply gypsum panels horizontally (perpendicular to framing) unless otherwise indicated or required by fire-resistance-rated assembly, and minimize end joints.
   a. Stagger abutting end joints not less than one framing member in alternate courses of panels.
   b. At stairwells and other high walls, install panels horizontally unless otherwise indicated or required by fire-resistance-rated assembly.
3. On Z-shaped furring members, apply gypsum panels vertically (parallel to framing) with no end joints. Locate edge joints over furring members.
4. Fastening Methods: Apply gypsum panels to supports with steel drill screws.

C. Multilayer Application:

1. On ceilings, apply gypsum board indicated for base layers before applying base layers on walls/partitions; apply face layers in same sequence. Apply base layers at right angles to framing members and offset face-layer joints one framing member, 16 inches minimum, from parallel base-layer joints, unless otherwise indicated or required by fire-resistance-rated assembly.
2. On partitions/walls, apply gypsum board indicated for base layers and face layers vertically (parallel to framing) with joints of base layers located over stud or furring member and face-layer joints offset at least one stud or furring member with base-layer joints unless otherwise indicated or required by fire-resistance-rated assembly. Stagger joints on opposite sides of partitions.
3. On Z-shaped furring members, apply base layer vertically (parallel to framing) and face layer either vertically (parallel to framing) or horizontally (perpendicular to framing) with vertical joints offset at least one furring member. Locate edge joints of base layer over furring members.
4. Fastening Methods: Fasten base layers and face layers separately to supports with screws .

3.4 FINISHING OF GYPSUM BOARD

A. General: Treat gypsum board joints, interior angles, edge trim, control joints, penetrations, fastener heads, surface defects, and elsewhere as required to prepare gypsum board surfaces for decoration. Promptly remove residual joint compound from adjacent surfaces.

B. Prefill open joints , rounded or beveled edges, and damaged surface areas.

Copyright © 2025 by the American Institute of Architects. Warning: This AIA MasterSpec-based document is protected by U.S. Copyright Law and International Treaties. It was created by "Michael Shilale Architects, LLP" for "Renovation of Rockland Green Administrative Headquarters and Construction of an Immersive Theatre Experience". A valid, current MasterSpec license is required for editing and use of this document for any other project.(22360)

C. Apply joint tape over gypsum board joints, except for trim products specifically indicated as not intended to receive tape.

D. Gypsum Board Finish Levels: Finish panels to levels indicated below and according to ASTM C840:

1. Level 4: At panel surfaces that will be exposed to view unless otherwise indicated .
   a. Primer and its application to surfaces are specified in Section 099123 "Interior Painting."

E. Glass-Mat Gypsum Sheathing Board: Finish according to manufacturer's written instructions for use as exposed soffit board.

F. Glass-Mat Faced Panels: Finish according to manufacturer's written instructions.

G. Cementitious Backer Units: Finish according to manufacturer's written instructions.

3.5 PROTECTION

A. Protect adjacent surfaces from drywall compound and promptly remove from floors and other non-drywall surfaces. Repair surfaces stained, marred, or otherwise damaged during drywall application.

B. Protect installed products from damage from weather, condensation, direct sunlight, construction, and other causes during remainder of the construction period.

C. Remove and replace panels that are wet, moisture damaged, and mold damaged.

1. Indications that panels are wet or moisture damaged include, but are not limited to, discoloration, sagging, or irregular shape.
2. Indications that panels are mold damaged include, but are not limited to, fuzzy or splotchy surface contamination and discoloration.

END OF SECTION 092900

Copyright © 2025 by the American Institute of Architects. Warning: This AIA MasterSpec-based document is protected by U.S. Copyright Law and International Treaties. It was created by "Michael Shilale Architects, LLP" for "Renovation of Rockland Green Administrative Headquarters and Construction of an Immersive Theatre Experience". A valid, current MasterSpec license is required for editing and use of this document for any other project.(22360)

SECTION 093013 - CERAMIC TILING

PART 1 - GENERAL

1.1 RELATED DOCUMENTS

A. Drawings and general provisions of the Contract, including General and Supplementary Conditions and Division 01 Specification Sections, apply to this Section.

1.2 SUMMARY

A. Section Includes:

1. Ceramic mosaic tile.
2. Porcelain tile.
3. Glazed wall tile.
4. Stone thresholds.
5. Tile backing panels.
6. Waterproof membrane for thinset applications.
7. Crack isolation membrane.

B. Related Requirements:

1. Section 079200 "Joint Sealants" for sealing of expansion, contraction, control, and isolation joints in tile surfaces.
2. Section 092900 "Gypsum Board" for cementitious backer units .
3. Section 093023 "Glass Mosaic Tiling."
4. Section 093033 "Stone Tiling."
5. Section 093500 "Chemical-Resistant Tiling."
6. Section 096340 "Stone Flooring" for stone thresholds.

1.3 DEFINITIONS

A. General: Definitions in the ANSI A108 series of tile installation standards and in ANSI A137.1 apply to Work of this Section unless otherwise specified.

B. ANSI A108 Series: ANSI A108.01, ANSI A108.02, ANSI A108.1A, ANSI A108.1B, ANSI A108.1C, ANSI A108.4, ANSI A108.5, ANSI A108.6, ANSI A108.8, ANSI A108.9, ANSI A108.10, ANSI A108.11, ANSI A108.12, ANSI A108.13, ANSI A108.14, ANSI A108.15, ANSI A108.16, and ANSI A108.17, which are contained in its "Specifications for Installation of Ceramic Tile."

C. Module Size: Actual tile size plus joint width indicated.

D. Face Size: Actual tile size, excluding spacer lugs.

Copyright © 2025 by the American Institute of Architects. Warning: This AIA MasterSpec-based document is protected by U.S. Copyright Law and International Treaties. It was created by "Michael Shilale Architects, LLP" for "Renovation of Rockland Green Administrative Headquarters and Construction of an Immersive Theatre Experience". A valid, current MasterSpec license is required for editing and use of this document for any other project.(22360)

1.4 PREINSTALLATION MEETINGS

A. Preinstallation Conference: Conduct conference at Project site .

1. Review requirements in ANSI A108.01 for substrates and for preparation by other trades.

1.5 ACTION SUBMITTALS

A. Product Data: For each type of product.

B. Shop Drawings: Show locations of each type of tile and tile pattern. Show widths, details, and locations of expansion, contraction, control, and isolation joints in tile substrates and finished tile surfaces.

C. Samples for Initial Selection: For tile, grout, and accessories involving color selection.

D. Samples for Verification:

1. Full-size units of each type and composition of tile and for each color and finish required. For ceramic mosaic tile in color blend patterns, provide full sheets of each color blend.
2. Full-size units of each type of trim and accessory for each color and finish required.
3. Stone thresholds in 6-inch lengths.

1.6 INFORMATIONAL SUBMITTALS

A. Qualification Data: For Installer.

B. Master Grade Certificates: For each shipment, type, and composition of tile, signed by tile manufacturer and Installer.

C. Product Certificates: For each type of product.

D. Product Test Reports: For tile-setting and -grouting products and certified porcelain tile.

1.7 MAINTENANCE MATERIAL SUBMITTALS

A. Furnish extra materials that match and are from same production runs as products installed and that are packaged with protective covering for storage and identified with labels describing contents.

1. Tile and Trim Units: Furnish quantity of full-size units equal to 3 percent of amount installed for each type, composition, color, pattern, and size indicated.
   a. .
2. Grout: Furnish quantity of grout equal to 3 percent of amount installed for each type, composition, and color indicated.

Copyright © 2025 by the American Institute of Architects. Warning: This AIA MasterSpec-based document is protected by U.S. Copyright Law and International Treaties. It was created by "Michael Shilale Architects, LLP" for "Renovation of Rockland Green Administrative Headquarters and Construction of an Immersive Theatre Experience". A valid, current MasterSpec license is required for editing and use of this document for any other project.(22360)

1.8 QUALITY ASSURANCE

A. Installer Qualifications:

1. Installer is a Trowel of Excellence member of the Tile Contractors' Association of America.
2. Installer's supervisor for Project holds the International Masonry Institute's Foreman Certification.
3. Installer employs installers recognized by the U.S. Department of Labor as Journeyman Tile Layers.

B. Mockups: Build mockups to verify selections made under Sample submittals and to demonstrate aesthetic effects and set quality standards for materials and execution.

1. Build mockup of each type of floor tile installation.
2. Build mockup of each type of wall tile installation.
3. Subject to compliance with requirements, approved mockups may become part of the completed Work if undisturbed at time of Substantial Completion.

1.9 DELIVERY, STORAGE, AND HANDLING

A. Deliver and store packaged materials in original containers with seals unbroken and labels intact until time of use. Comply with requirements in ANSI A137.1 for labeling tile packages.

B. Store tile and cementitious materials on elevated platforms, under cover, and in a dry location.

C. Store aggregates where grading and other required characteristics can be maintained and contamination can be avoided.

D. Store liquid materials in unopened containers and protected from freezing.

1.10 FIELD CONDITIONS

A. Environmental Limitations: Do not install tile until construction in spaces is complete and ambient temperature and humidity conditions are maintained at the levels indicated in referenced standards and manufacturer's written instructions.

PART 2 - PRODUCTS

2.1 MANUFACTURERS

A. Source Limitations for Tile: Obtain tile of each type and color or finish from single source or producer.

1. Obtain tile of each type and color or finish from same production run and of consistent quality in appearance and physical properties for each contiguous area.

Copyright © 2025 by the American Institute of Architects. Warning: This AIA MasterSpec-based document is protected by U.S. Copyright Law and International Treaties. It was created by "Michael Shilale Architects, LLP" for "Renovation of Rockland Green Administrative Headquarters and Construction of an Immersive Theatre Experience". A valid, current MasterSpec license is required for editing and use of this document for any other project.(22360)

B. Source Limitations for Setting and Grouting Materials: Obtain ingredients of a uniform quality for each mortar, adhesive, and grout component from single manufacturer and each aggregate from single source or producer.

1. Obtain setting and grouting materials, except for unmodified Portland cement and aggregate, from single manufacturer.
2. Obtain waterproof membrane and crack isolation membrane, except for sheet products, from manufacturer of setting and grouting materials.

C. Source Limitations for Other Products: Obtain each of the following products specified in this Section from a single manufacturer:

1. Stone thresholds.
2. Waterproof membrane.
3. Crack isolation membrane.
4. Cementitious backer units.

2.2 PRODUCTS, GENERAL

A. ANSI Ceramic Tile Standard: Provide tile that complies with ANSI A137.1 for types, compositions, and other characteristics indicated.

1. Provide tile complying with Standard grade requirements unless otherwise indicated.

B. ANSI Standards for Tile Installation Materials: Provide materials complying with ANSI A108.02, ANSI standards referenced in other Part 2 articles, ANSI standards referenced by TCNA installation methods specified in tile installation schedules, and other requirements specified.

C. Factory Blending: For tile exhibiting color variations within ranges, blend tile in factory and package so tile units taken from one package show same range in colors as those taken from other packages and match approved Samples.

D. Mounting: For factory-mounted tile, provide back- or edge-mounted tile assemblies as standard with manufacturer unless otherwise indicated.

2.3 TILE PRODUCTS

A. Ceramic Tile Type : Factory-mounted unglazed ceramic mosaic tile.

1. Composition: Porcelain .
2. Certification: Porcelain tile certified by the Porcelain Tile Certification Agency.
3. Module Size: 1 by 1 inch .
4. Thickness: 1/4 inch.
5. Face: Plain with cushion edges.
6. Surface: Slip resistant, with abrasive admixture.
7. Dynamic Coefficient of Friction: Not less than 0.42.
8. Tile Color and Pattern: As selected by Architect from manufacturer's full range .

Copyright © 2025 by the American Institute of Architects. Warning: This AIA MasterSpec-based document is protected by U.S. Copyright Law and International Treaties. It was created by "Michael Shilale Architects, LLP" for "Renovation of Rockland Green Administrative Headquarters and Construction of an Immersive Theatre Experience". A valid, current MasterSpec license is required for editing and use of this document for any other project.(22360)

9. Grout Color: As selected by Architect from manufacturer's full range .
10. Trim Units: Coordinated with sizes and coursing of adjoining flat tile where applicable and matching characteristics of adjoining flat tile. Provide shapes as follows, selected from manufacturer's standard shapes:
    a. Wainscot Cap for Flush Conditions: Regular flat tile for conditions where tile wainscot is shown flush with wall surface above it, same size as adjoining flat tile.
    b. Internal Corners: Field-butted square corners. For coved base and cap, use angle pieces designed to fit with stretcher shapes.
    c. Tapered Transition Tile: Shape designed to effect transition between thickness of tile floor and adjoining floor finishes of different thickness, tapered to provide reduction in thickness from 1/2 to 1/4 inch across nominal 4-inch dimension.

B. Ceramic Tile Type : Unglazed porcelain tile.

1. Manufacturers: Subject to compliance with requirements, provide products by one of the following:
    a. American Marazzi Tile, Inc.
    b. American Olean; a division of Dal-Tile Corporation.
    c. Crossville, Inc.
2. Certification: Tile certified by the Porcelain Tile Certification Agency.
3. Face Size: as noted on finish schedule .
4. Face Size Variation: Rectified.
5. Face: Plain with square or cushion edges .
6. Tile Color, Glaze, and Pattern: As indicated by manufacturer's designations As selected by Architect from manufacturer's full range .
7. Grout Color: As selected by Architect from manufacturer's full range .
8. Trim Units: Coordinated with sizes and coursing of adjoining flat tile where applicable. Provide shapes as follows, selected from manufacturer's standard shapes:
    a. Wainscot Cap for Flush Conditions: Regular flat tile for conditions where tile wainscot is shown flush with wall surface above it, same size as adjoining flat tile.
    b. External Corners: Surface bullnose, module size same as adjoining flat tile .
    c. Internal Corners: Field-butted square corners.

C. Ceramic Tile Type : Glazed wall tile.

1. Manufacturers: Subject to compliance with requirements, provide products by the following:
    a. Daltile.
2. Module Size: 4-1/4 by 4-1/4 inches .
3. Face Size Variation: Rectified.
4. Thickness: 5/16 inch.
5. Face: Plain with modified square edges or cushion edges .
6. Finish: Bright, opaque glaze.
7. Tile Color and Pattern: As selected by Architect from manufacturer's full range .
8. Grout Color: As selected by Architect from manufacturer's full range .
9. Mounting: Factory, back mounted.
10. Mounting: Pregrouted sheets of tiles are factory assembled and grouted with manufacturer's standard white silicone rubber.

Copyright © 2025 by the American Institute of Architects. Warning: This AIA MasterSpec-based document is protected by U.S. Copyright Law and International Treaties. It was created by "Michael Shilale Architects, LLP" for "Renovation of Rockland Green Administrative Headquarters and Construction of an Immersive Theatre Experience". A valid, current MasterSpec license is required for editing and use of this document for any other project.(22360)

11. Trim Units: Coordinated with sizes and coursing of adjoining flat tile where applicable and matching characteristics of adjoining flat tile. Provide shapes as follows, selected from manufacturer's standard shapes:
    a. Wainscot Cap for Flush Conditions: Regular flat tile for conditions where tile wainscot is shown flush with wall surface above it, same size as adjoining flat tile.
    b. External Corners for Portland Cement Mortar Installations: Bullnose shape with radius of at least 3/4 inch unless otherwise indicated.
    c. External Corners for Thinset Mortar Installations: Surface bullnose, same size as adjoining flat tile.
    d. Internal Corners: Field-butted square corners. For coved base and cap use angle pieces designed to fit with stretcher shapes.

2.4 THRESHOLDS

A. General: Fabricate to sizes and profiles indicated or required to provide transition between adjacent floor finishes.

1. Bevel edges at 1:2 slope, with lower edge of bevel aligned with or up to 1/16 inch above adjacent floor surface. Finish bevel to match top surface of threshold. Limit height of threshold to 1/2 inch or less above adjacent floor surface.

B. Marble Thresholds: ASTM C 503/C 503M, with a minimum abrasion resistance of 10 according to ASTM C 1353 or ASTM C 241/C 241M and with honed finish.

1. Description: Uniform, fine- to medium-grained white stone with gray veining.

2.5 TILE BACKING PANELS

A. Cementitious Backer Units: ANSI A118.9 or ASTM C 1325, Type A, in maximum lengths available to minimize end-to-end butt joints.

1. Manufacturers: Subject to compliance with requirements, provide products by one of the following:
    a. Custom Building Products.
    b. Georgia-Pacific Gypsum LLC.
    c. USG Corporation.
2. Thickness: 5/8 inch .

2.6 WATERPROOF MEMBRANE

A. General: Manufacturer's standard product that complies with ANSI A118.10 and is recommended by the manufacturer for the application indicated. Include reinforcement and accessories recommended by manufacturer.

B. Fabric-Reinforced, Fluid-Applied Membrane: System consisting of liquid-latex rubber or elastomeric polymer and continuous fabric reinforcement.

Copyright © 2025 by the American Institute of Architects. Warning: This AIA MasterSpec-based document is protected by U.S. Copyright Law and International Treaties. It was created by "Michael Shilale Architects, LLP" for "Renovation of Rockland Green Administrative Headquarters and Construction of an Immersive Theatre Experience". A valid, current MasterSpec license is required for editing and use of this document for any other project.(22360)

1. Manufacturers: Subject to compliance with requirements, provide products by one of the following:
   a. Bonsal American, an Oldcastle company.
   b. LATICRETE SUPERCAP, LLC.
   c. MAPEI Corporation.

2.7 CRACK ISOLATION MEMBRANE

A. General: Manufacturer's standard product that complies with ANSI A118.12 for high performance and is recommended by the manufacturer for the application indicated. Include reinforcement and accessories recommended by manufacturer.

B. Fluid-Applied Membrane: Liquid-latex rubber or elastomeric polymer.

1. Manufacturers: Subject to compliance with requirements, available manufacturers offering products that may be incorporated into the Work include, but are not limited to, the following:
   a. Bostik, Inc.
   b. MAPEI Corporation.

2.8 SETTING MATERIALS

A. Modified Dry-Set Mortar (Thinset): ANSI A118.4.

1. Manufacturers: Subject to compliance with requirements, available manufacturers offering products that may be incorporated into the Work include, but are not limited to, the following:
   a. Bonsal American, an Oldcastle company.
   b. LATICRETE SUPERCAP, LLC.
   c. MAPEI Corporation.
2. Provide prepackaged, dry-mortar mix containing dry, redispersible, vinyl acetate or acrylic additive to which only water must be added at Project site.
3. Provide prepackaged, dry-mortar mix combined with acrylic resin liquid-latex additive at Project site.
4. For wall applications, provide mortar that complies with requirements for nonsagging mortar in addition to the other requirements in ANSI A118.4.

2.9 GROUT MATERIALS

A. Sand-Portland Cement Grout: ANSI A108.10, consisting of white or gray cement and white or colored aggregate as required to produce color indicated.

B. Standard Cement Grout: ANSI A118.6.

1. Manufacturers: Subject to compliance with requirements, available manufacturers offering products that may be incorporated into the Work include, but are not limited to, the following:

Copyright © 2025 by the American Institute of Architects. Warning: This AIA MasterSpec-based document is protected by U.S. Copyright Law and International Treaties. It was created by "Michael Shilale Architects, LLP" for "Renovation of Rockland Green Administrative Headquarters and Construction of an Immersive Theatre Experience". A valid, current MasterSpec license is required for editing and use of this document for any other project.(22360)

a. Bonsal American, an Oldcastle company.
b. LATICRETE SUPERCAP, LLC.
c. MAPEI Corporation.

C. High-Performance Tile Grout: ANSI A118.7.

1. Manufacturers: Subject to compliance with requirements, provide products by one of the following:
   a. Bonsal American, an Oldcastle company.
   b. LATICRETE SUPERCAP, LLC.
   c. MAPEI Corporation.
2. Polymer Type: Ethylene vinyl acetate or acrylic additive, in dry, redispersible form, prepackaged with other dry ingredients.
3. Polymer Type: Acrylic resin in liquid-latex form for addition to prepackaged dry-grout mix.

D. Water-Cleanable Epoxy Grout: ANSI A118.3 , with a VOC content of 65 g/L or less.

1. Manufacturers: Subject to compliance with requirements, provide products by one of the following:
   a. Bonsal American, an Oldcastle company.
   b. LATICRETE SUPERCAP, LLC.
   c. MAPEI Corporation.
2. Provide product capable of withstanding continuous and intermittent exposure to temperatures of up to 140 and 212 deg F, respectively, and certified by manufacturer for intended use.

E. Grout for Pregrouted Tile Sheets: Same product used in factory to pregrout tile sheets.

2.10 MISCELLANEOUS MATERIALS

A. Tile Cleaner: A neutral cleaner capable of removing soil and residue without harming tile and grout surfaces, specifically approved for materials and installations indicated by tile and grout manufacturers.

B. Floor Sealer: Manufacturer's standard product for sealing grout joints and that does not change color or appearance of grout.

1. Manufacturers: Subject to compliance with requirements, available manufacturers offering products that may be incorporated into the Work include, but are not limited to, the following:
   a. Bonsal American, an Oldcastle company.

2.11 MIXING MORTARS AND GROUT

A. Mix mortars and grouts to comply with referenced standards and mortar and grout manufacturers' written instructions.

Copyright © 2025 by the American Institute of Architects. Warning: This AIA MasterSpec-based document is protected by U.S. Copyright Law and International Treaties. It was created by "Michael Shilale Architects, LLP" for "Renovation of Rockland Green Administrative Headquarters and Construction of an Immersive Theatre Experience". A valid, current MasterSpec license is required for editing and use of this document for any other project.(22360)

B. Add materials, water, and additives in accurate proportions.

C. Obtain and use type of mixing equipment, mixer speeds, mixing containers, mixing time, and other procedures to produce mortars and grouts of uniform quality with optimum performance characteristics for installations indicated.

PART 3 - EXECUTION

3.1 EXAMINATION

A. Examine substrates, areas, and conditions where tile will be installed, with Installer present, for compliance with requirements for installation tolerances and other conditions affecting performance of the Work.

1. Verify that substrates for setting tile are firm; dry; clean; free of coatings that are incompatible with tile-setting materials, including curing compounds and other substances that contain soap, wax, oil, or silicone; and comply with flatness tolerances required by ANSI A108.01 for installations indicated.
2. Verify that concrete substrates for tile floors installed with adhesives or thinset mortar comply with surface finish requirements in ANSI A108.01 for installations indicated.
   a. Verify that surfaces that received a steel trowel finish have been mechanically scarified.
   b. Verify that protrusions, bumps, and ridges have been removed by sanding or grinding.
3. Verify that installation of grounds, anchors, recessed frames, electrical and mechanical units of work, and similar items located in or behind tile has been completed.
4. Verify that joints and cracks in tile substrates are coordinated with tile joint locations; if not coordinated, adjust joint locations in consultation with Architect.

B. Proceed with installation only after unsatisfactory conditions have been corrected.

3.2 PREPARATION

A. Fill cracks, holes, and depressions in concrete substrates for tile floors installed with adhesives or thinset mortar with trowelable leveling and patching compound specifically recommended by tile-setting material manufacturer.

B. Where indicated, prepare substrates to receive waterproofing by applying a reinforced mortar bed that complies with ANSI A108.1A and is sloped 1/4 inch per foot toward drains.

C. Blending: For tile exhibiting color variations, verify that tile has been factory blended and packaged so tile units taken from one package show same range of colors as those taken from other packages and match approved Samples. If not factory blended, either return to manufacturer or blend tiles at Project site before installing.

Copyright © 2025 by the American Institute of Architects. Warning: This AIA MasterSpec-based document is protected by U.S. Copyright Law and International Treaties. It was created by "Michael Shilale Architects, LLP" for "Renovation of Rockland Green Administrative Headquarters and Construction of an Immersive Theatre Experience". A valid, current MasterSpec license is required for editing and use of this document for any other project.(22360)

3.3 CERAMIC TILE INSTALLATION

A. Comply with TCNA's "Handbook for Ceramic, Glass, and Stone Tile Installation" for TCNA installation methods specified in tile installation schedules. Comply with parts of the ANSI A108 series "Specifications for Installation of Ceramic Tile" that are referenced in TCNA installation methods, specified in tile installation schedules, and apply to types of setting and grouting materials used.

1. For the following installations, follow procedures in the ANSI A108 series of tile installation standards for providing 95 percent mortar coverage:
   a. Exterior tile floors.
   b. Tile floors in wet areas.
   c. Tile swimming pool decks.
   d. Tile floors in laundries.
   e. Tile floors consisting of tiles 8 by 8 inches or larger.
   f. Tile floors consisting of rib-backed tiles.

B. Extend tile work into recesses and under or behind equipment and fixtures to form complete covering without interruptions unless otherwise indicated. Terminate work neatly at obstructions, edges, and corners without disrupting pattern or joint alignments.

C. Accurately form intersections and returns. Perform cutting and drilling of tile without marring visible surfaces. Carefully grind cut edges of tile abutting trim, finish, or built-in items for straight aligned joints. Fit tile closely to electrical outlets, piping, fixtures, and other penetrations so plates, collars, or covers overlap tile.

D. Provide manufacturer's standard trim shapes where necessary to eliminate exposed tile edges.

E. Where accent tile differs in thickness from field tile, vary setting-bed thickness so that tiles are flush.

F. Jointing Pattern: Lay tile in grid pattern unless otherwise indicated. Lay out tile work and center tile fields in both directions in each space or on each wall area. Lay out tile work to minimize the use of pieces that are less than half of a tile. Provide uniform joint widths unless otherwise indicated.

1. For tile mounted in sheets, make joints between tile sheets same width as joints within tile sheets so joints between sheets are not apparent in finished work.
2. Where adjoining tiles on floor, base, walls, or trim are specified or indicated to be same size, align joints.
3. Where tiles are specified or indicated to be whole integer multiples of adjoining tiles on floor, base, walls, or trim, align joints unless otherwise indicated.

G. Joint Widths: Unless otherwise indicated, install tile with the following joint widths:

1. Ceramic Mosaic Tile: [**1/8 inch**].
2. Glazed Wall Tile: 1/16 inch .
3. Porcelain Tile: 1/4 inch .

H. Lay out tile wainscots to dimensions indicated or to next full tile beyond dimensions indicated.

Copyright © 2025 by the American Institute of Architects. Warning: This AIA MasterSpec-based document is protected by U.S. Copyright Law and International Treaties. It was created by "Michael Shilale Architects, LLP" for "Renovation of Rockland Green Administrative Headquarters and Construction of an Immersive Theatre Experience". A valid, current MasterSpec license is required for editing and use of this document for any other project.(22360)

I. Expansion Joints: Provide expansion joints and other sealant-filled joints, including control, contraction, and isolation joints, where indicated. Form joints during installation of setting materials, mortar beds, and tile. Do not saw-cut joints after installing tiles.

1. Where joints occur in concrete substrates, locate joints in tile surfaces directly above them.

J. Stone Thresholds: Install stone thresholds in same type of setting bed as adjacent floor unless otherwise indicated.

1. At locations where mortar bed (thickset) would otherwise be exposed above adjacent floor finishes, set thresholds in modified dry-set mortar (thinset).
2. Do not extend cleavage membrane waterproofing or crack isolation membrane under thresholds set in standard dry-set mortar. Fill joints between such thresholds and adjoining tile set on cleavage membrane with elastomeric sealant.

K. Floor Sealer: Apply floor sealer to cementitious grout joints in tile floors according to floor-sealer manufacturer's written instructions. As soon as floor sealer has penetrated grout joints, remove excess sealer and sealer from tile faces by wiping with soft cloth.

3.4 TILE BACKING PANEL INSTALLATION

A. Install panels and treat joints according to ANSI A108.11 and manufacturer's written instructions for type of application indicated. Use modified dry-set mortar for bonding material unless otherwise directed in manufacturer's written instructions.

3.5 WATERPROOFING INSTALLATION

A. Install waterproofing to comply with ANSI A108.13 and manufacturer's written instructions to produce waterproof membrane of uniform thickness that is bonded securely to substrate.

B. Allow waterproofing to cure and verify by testing that it is watertight before installing tile or setting materials over it.

3.6 CRACK ISOLATION MEMBRANE INSTALLATION

A. Install crack isolation membrane to comply with ANSI A108.17 and manufacturer's written instructions to produce membrane of uniform thickness that is bonded securely to substrate.

B. Allow crack isolation membrane to cure before installing tile or setting materials over it.

3.7 ADJUSTING AND CLEANING

A. Remove and replace tile that is damaged or that does not match adjoining tile. Provide new matching units, installed as specified and in a manner to eliminate evidence of replacement.

Copyright © 2025 by the American Institute of Architects. Warning: This AIA MasterSpec-based document is protected by U.S. Copyright Law and International Treaties. It was created by "Michael Shilale Architects, LLP" for "Renovation of Rockland Green Administrative Headquarters and Construction of an Immersive Theatre Experience". A valid, current MasterSpec license is required for editing and use of this document for any other project.(22360)

B. Cleaning: On completion of placement and grouting, clean all ceramic tile surfaces so they are free of foreign matter.

1. Remove grout residue from tile as soon as possible.
2. Clean grout smears and haze from tile according to tile and grout manufacturer's written instructions but no sooner than 10 days after installation. Use only cleaners recommended by tile and grout manufacturers and only after determining that cleaners are safe to use by testing on samples of tile and other surfaces to be cleaned. Protect metal surfaces and plumbing fixtures from effects of cleaning. Flush surfaces with clean water before and after cleaning.

3.8 PROTECTION

A. Protect installed tile work with kraft paper or other heavy covering during construction period to prevent staining, damage, and wear. If recommended by tile manufacturer, apply coat of neutral protective cleaner to completed tile walls and floors.

B. Prohibit foot and wheel traffic from tiled floors for at least seven days after grouting is completed.

C. Before final inspection, remove protective coverings and rinse neutral protective cleaner from tile surfaces.

3.9 INTERIOR CERAMIC TILE INSTALLATION SCHEDULE

A. Interior Floor Installations, Concrete Subfloor:

1. Ceramic Tile Installation : TCNA F116; organic adhesive water-cleanable, tile-setting epoxy.
   a. Ceramic Tile Type: .
   b. Grout: High-performance sanded grout.
2. Ceramic Tile Installation : TCNA F122; thinset mortar on waterproof membrane.
   a. Ceramic Tile Type: .
   b. Thinset Mortar: Medium-bed, modified dry-set Improved modified dry-setmortar.
   c. Grout: High-performance sanded grout.
3. Ceramic Tile Installation : TCNA F125-Full ; thinset mortar on crack isolation membrane.
   a. Ceramic Tile Type: .
   b. Thinset Mortar: Modified dry-set Medium-bed, modified dry-set mortar.
   c. Grout: High-performance sanded grout.
4. Ceramic Tile Installation : TCNA F132; water-cleanable, tile-setting epoxy on cured cement mortar bed bonded to concrete subfloor installed over cleavage membrane; epoxy grout.
   a. Ceramic Tile Type: .
   b. Grout: Water-cleanable epoxy grout.

B. Interior Wall Installations, Wood or Metal Studs or Furring:

Copyright © 2025 by the American Institute of Architects. Warning: This AIA MasterSpec-based document is protected by U.S. Copyright Law and International Treaties. It was created by "Michael Shilale Architects, LLP" for "Renovation of Rockland Green Administrative Headquarters and Construction of an Immersive Theatre Experience". A valid, current MasterSpec license is required for editing and use of this document for any other project.(22360)

1. Ceramic Tile Installation : TCNA W221 and ANSI A108.1A ; cement mortar bed (thickset) over waterproof membrane on solid backing.
    a. Ceramic Tile Type: .
    b. Bond Coat for Wet-Set Method: Standard dry-set mortar.
    c. Bond Coat for Cured-Bed Method: Standard dry-set mortar.
    d. Grout: High-performance unsanded grout.
2. Ceramic Tile Installation : TCNA W222 and ANSI A108.1A ; one-coat cement mortar bed (thickset) over waterproof membrane on solid backing.
    a. Ceramic Tile Type: .
    b. Bond Coat for Wet-Set Method: Standard dry-set mortar.
    c. Bond Coat for Cured-Bed Method: Standard dry-set mortar.
    d. Grout: High-performance unsanded grout.
3. Ceramic Tile Installation : TCNA W244C or TCNA W244F; thinset mortar on cementitious backer units or fiber-cement backer board.
    a. Ceramic Tile Type: .
    b. Thinset Mortar: Standard dry-set mortar.
    c. Grout: High-performance unsanded Water-cleanable epoxy grout.

END OF SECTION 093013

Copyright © 2025 by the American Institute of Architects. Warning: This AIA MasterSpec-based document is protected by U.S. Copyright Law and International Treaties. It was created by "Michael Shilale Architects, LLP" for "Renovation of Rockland Green Administrative Headquarters and Construction of an Immersive Theatre Experience". A valid, current MasterSpec license is required for editing and use of this document for any other project.(22360)

SECTION 095113 - ACOUSTICAL PANEL CEILINGS

PART 1 - GENERAL

1.1 RELATED DOCUMENTS

A. Drawings and general provisions of the Contract, including General and Supplementary Conditions and Division 01 Specification Sections, apply to this Section.

1.2 SUMMARY

A. Section includes acoustical panels and exposed suspension systems for interior ceilings.

B. Products furnished, but not installed under this Section, include anchors, clips, and other ceiling attachment devices to be cast in concrete.

1.3 PREINSTALLATION MEETINGS

A. Preinstallation Conference: Conduct conference at Project site .

1.4 ACTION SUBMITTALS

A. Product Data: For each type of product.

B. Samples: For each exposed product and for each color and texture specified, 6 inches in size.

C. Samples for Initial Selection: For components with factory-applied finishes.

D. Delegated-Design Submittal: For seismic restraints for ceiling systems.

1. Include design calculations for seismic restraints including analysis data signed and sealed by the qualified professional engineer responsible for their preparation.

1.5 CLOSEOUT SUBMITTALS

A. Maintenance Data: For finishes to include in maintenance manuals.

1.6 MAINTENANCE MATERIAL SUBMITTALS

A. Furnish extra materials , from the same product run, that match products installed and that are packaged with protective covering for storage and identified with labels describing contents.

1. Acoustical Ceiling Units: Full-size panels equal to 2 percent of quantity installed.

Copyright © 2025 by the American Institute of Architects. Warning: This AIA MasterSpec-based document is protected by U.S. Copyright Law and International Treaties. It was created by "Michael Shilale Architects, LLP" for "Renovation of Rockland Green Administrative Headquarters and Construction of an Immersive Theatre Experience". A valid, current MasterSpec license is required for editing and use of this document for any other project.(22360)

2. Suspension-System Components: Quantity of each exposed component equal to 2 percent of quantity installed.
3. Hold-Down Clips: Equal to 2 percent of quantity installed.

1.7 DELIVERY, STORAGE, AND HANDLING

A. Deliver acoustical panels, suspension-system components, and accessories to Project site and store them in a fully enclosed, conditioned space where they will be protected against damage from moisture, humidity, temperature extremes, direct sunlight, surface contamination, and other causes.

B. Before installing acoustical panels, permit them to reach room temperature and a stabilized moisture content.

1.8 FIELD CONDITIONS

A. Environmental Limitations: Do not install acoustical panel ceilings until spaces are enclosed and weathertight, wet-work in spaces is complete and dry, work above ceilings is complete, and ambient temperature and humidity conditions are maintained at the levels indicated for Project when occupied for its intended use.

1. Pressurized Plenums: Operate ventilation system for not less than 48 hours before beginning acoustical panel ceiling installation.

PART 2 - PRODUCTS

2.1 MANUFACTURERS

A. Source Limitations: Obtain each type of acoustical ceiling panel and its supporting suspension system from single source from single manufacturer.

2.2 PERFORMANCE REQUIREMENTS

A. Seismic Performance: Suspended ceilings shall withstand the effects of earthquake motions determined according to ASCE/SEI 7 .

B. Surface-Burning Characteristics: Comply with ASTM E 84; testing by a qualified testing agency. Identify products with appropriate markings of applicable testing agency.

1. Flame-Spread Index: Class A according to ASTM E 1264.
2. Smoke-Developed Index: 50 or less.

Copyright © 2025 by the American Institute of Architects. Warning: This AIA MasterSpec-based document is protected by U.S. Copyright Law and International Treaties. It was created by "Michael Shilale Architects, LLP" for "Renovation of Rockland Green Administrative Headquarters and Construction of an Immersive Theatre Experience". A valid, current MasterSpec license is required for editing and use of this document for any other project.(22360)

2.3 ACOUSTICAL PANELS

A. Acoustical Panel Standard: Provide manufacturer's standard panels according to ASTM E 1264 and designated by type, form, pattern, acoustical rating, and light reflectance unless otherwise indicated.

B. Classification: Provide panels as follows:

1. Type and Form: Type IV, mineral base with membrane-faced overlay; Form 1, nodular; with glass-fiber cloth overlay.
2. Pattern: E (lightly textured) .

C. Color: White .

D. Light Reflectance (LR): Not less than 0.85 .

E. Ceiling Attenuation Class (CAC): Not less than 35 .

F. Noise Reduction Coefficient (NRC): Not less than 0.80 .

G. Articulation Class (AC): Not less than 190 .

H. Edge/Joint Detail: Square Flush reveal sized to fit flange of exposed suspension-system members Beveled, kerfed, and rabbeted long edges and square, butt-on short edges .

I. Thickness: As indicated in a schedule .

J. Modular Size: As indicated on Drawings .

K. Antimicrobial Treatment: Manufacturer's standard broad spectrum, antimicrobial formulation that inhibits fungus, mold, mildew, and gram-positive and gram-negative bacteria and showing no mold, mildew, or bacterial growth when tested according to ASTM D 3273, ASTM D 3274, or ASTM G 21 and evaluated according to ASTM D 3274 or ASTM G 21.

2.4 METAL SUSPENSION SYSTEM

A. Metal Suspension-System Standard: Provide manufacturer's standard, direct-hung, metal suspension system and accessories according to ASTM C 635/C 635M and designated by type, structural classification, and finish indicated.

1. High-Humidity Finish: Where indicated, provide coating tested and classified for "severe environment performance" according to ASTM C 635/C 635M.

B. Wide-Face, Capped, Double-Web, Steel Suspension System: Main and cross runners roll formed from cold-rolled steel sheet; prepainted, electrolytically zinc coated, or hot-dip galvanized, G30 coating designation; with prefinished 15/16-inch- wide metal caps on flanges.

1. Structural Classification: Intermediate -duty system.
2. End Condition of Cross Runners: butt-edge type.

Copyright © 2025 by the American Institute of Architects. Warning: This AIA MasterSpec-based document is protected by U.S. Copyright Law and International Treaties. It was created by "Michael Shilale Architects, LLP" for "Renovation of Rockland Green Administrative Headquarters and Construction of an Immersive Theatre Experience". A valid, current MasterSpec license is required for editing and use of this document for any other project.(22360)

3. Face Design: Flat, flush.
4. Cap Material: Cold-rolled steel .
5. Cap Finish: Painted white .

2.5 ACCESSORIES

A. Attachment Devices: Size for five times the design load indicated in ASTM C 635/C 635M, Table 1, "Direct Hung," unless otherwise indicated. Comply with seismic design requirements.

1. Anchors in Concrete: Anchors of type and material indicated below, with holes or loops for attaching hangers of type indicated and with capability to sustain, without failure, a load equal to five times that imposed by ceiling construction, as determined by testing according to ASTM E 488/E 488M or ASTM E 1512 as applicable, conducted by a qualified testing and inspecting agency.
   a. Type: Postinstalled expansion anchors.

B. Wire Hangers, Braces, and Ties: Provide wires as follows:

1. Zinc-Coated, Carbon-Steel Wire: ASTM A 641/A 641M, Class 1 zinc coating, soft temper.
2. Size: Wire diameter sufficient for its stress at three times hanger design load (ASTM C 635/C 635M, Table 1, "Direct Hung") will be less than yield stress of wire, but not less than 0.135-inch- diameter wire.

C. Hanger Rods: Mild steel, zinc coated or protected with rust-inhibitive paint.

D. Seismic Clips: Manufacturer's standard seismic clips designed to secure acoustical panels in place during a seismic event.

E. Seismic Stabilizer Bars: Manufacturer's standard perimeter stabilizers designed to accommodate seismic forces.

F. Seismic Struts: Manufacturer's standard compression struts designed to accommodate seismic forces.

2.6 METAL EDGE MOLDINGS AND TRIM

A. Roll-Formed, Sheet-Metal Edge Moldings and Trim: Type and profile indicated or, if not indicated, manufacturer's standard moldings for edges and penetrations that comply with seismic design requirements; formed from sheet metal of same material, finish, and color as that used for exposed flanges of suspension-system runners.

1. Edge moldings shall fit acoustical panel edge details and suspension systems indicated and match width and configuration of exposed runners unless otherwise indicated.
2. For lay-in panels with reveal edge details, provide stepped edge molding that forms reveal of same depth and width as that formed between edge of panel and flange at exposed suspension member .

Copyright © 2025 by the American Institute of Architects. Warning: This AIA MasterSpec-based document is protected by U.S. Copyright Law and International Treaties. It was created by "Michael Shilale Architects, LLP" for "Renovation of Rockland Green Administrative Headquarters and Construction of an Immersive Theatre Experience". A valid, current MasterSpec license is required for editing and use of this document for any other project.(22360)

3. For circular penetrations of ceiling, provide edge moldings fabricated to diameter required to fit penetration exactly.

2.7 ACOUSTICAL SEALANT

A. Acoustical Sealant: As specified in Section 079219 "Acoustical Joint Sealants."

PART 3 - EXECUTION

3.1 EXAMINATION

A. Examine substrates, areas, and conditions, including structural framing to which acoustical panel ceilings attach or abut, with Installer present, for compliance with requirements specified in this and other Sections that affect ceiling installation and anchorage and with requirements for installation tolerances and other conditions affecting performance of acoustical panel ceilings.

B. Examine acoustical panels before installation. Reject acoustical panels that are wet, moisture damaged, or mold damaged.

C. Proceed with installation only after unsatisfactory conditions have been corrected.

3.2 PREPARATION

A. Measure each ceiling area and establish layout of acoustical panels to balance border widths at opposite edges of each ceiling. Avoid using less-than-half-width panels at borders unless otherwise indicated, and comply with layout shown on reflected ceiling plans.

B. Layout openings for penetrations centered on the penetrating items.

3.3 INSTALLATION

A. Install acoustical panel ceilings according to ASTM C 636/C 636M , seismic design requirements, and manufacturer's written instructions.

1. Fire-Rated Assembly: Install fire-rated ceiling systems according to tested fire-rated design.

B. Suspend ceiling hangers from building's structural members and as follows:

1. Install hangers plumb and free from contact with insulation or other objects within ceiling plenum that are not part of supporting structure or of ceiling suspension system.
2. Splay hangers only where required to miss obstructions; offset resulting horizontal forces by bracing, countersplaying, or other equally effective means.
3. Where width of ducts and other construction within ceiling plenum produces hanger spacings that interfere with location of hangers at spacings required to support standard

Copyright © 2025 by the American Institute of Architects. Warning: This AIA MasterSpec-based document is protected by U.S. Copyright Law and International Treaties. It was created by "Michael Shilale Architects, LLP" for "Renovation of Rockland Green Administrative Headquarters and Construction of an Immersive Theatre Experience". A valid, current MasterSpec license is required for editing and use of this document for any other project.(22360)

suspension-system members, install supplemental suspension members and hangers in form of trapezes or equivalent devices.

4. Secure wire hangers to ceiling-suspension members and to supports above with a minimum of three tight turns. Connect hangers directly to structure or to inserts, eye screws, or other devices that are secure and appropriate for substrate and that will not deteriorate or otherwise fail due to age, corrosion, or elevated temperatures.
5. Secure flat, angle, channel, and rod hangers to structure, including intermediate framing members, by attaching to inserts, eye screws, or other devices that are secure and appropriate for both the structure to which hangers are attached and the type of hanger involved. Install hangers in a manner that will not cause them to deteriorate or fail due to age, corrosion, or elevated temperatures.
6. Do not support ceilings directly from permanent metal forms or floor deck. Fasten hangers to cast-in-place hanger inserts, postinstalled mechanical or adhesive anchors, or power-actuated fasteners that extend through forms into concrete.
7. When steel framing does not permit installation of hanger wires at spacing required, install carrying channels or other supplemental support for attachment of hanger wires.
8. Do not attach hangers to steel deck tabs.
9. Do not attach hangers to steel roof deck. Attach hangers to structural members.
10. Space hangers not more than 48 inches o.c. along each member supported directly from hangers unless otherwise indicated; provide hangers not more than 8 inches from ends of each member.
11. Size supplemental suspension members and hangers to support ceiling loads within performance limits established by referenced standards.

C. Install edge moldings and trim of type indicated at perimeter of acoustical ceiling area and where necessary to conceal edges of acoustical panels.

1. Apply acoustical sealant in a continuous ribbon concealed on back of vertical legs of moldings before they are installed.
2. Screw attach moldings to substrate at intervals not more than 16 inches o.c. and not more than 3 inches from ends. Miter corners accurately and connect securely.
3. Do not use exposed fasteners, including pop rivets, on moldings and trim.

D. Install suspension-system runners so they are square and securely interlocked with one another. Remove and replace dented, bent, or kinked members.

E. Install acoustical panels with undamaged edges and fit accurately into suspension-system runners and edge moldings. Scribe and cut panels at borders and penetrations to provide precise fit.

1. Arrange directionally patterned acoustical panels as follows:
   a. As indicated on reflected ceiling plans.
2. For square-edged panels, install panels with edges fully hidden from view by flanges of suspension-system runners and moldings.
3. For reveal-edged panels on suspension-system runners, install panels with bottom of reveal in firm contact with top surface of runner flanges.
4. For reveal-edged panels on suspension-system members with box-shaped flanges, install panels with reveal surfaces in firm contact with suspension-system surfaces and panel faces flush with bottom face of runners.

Copyright © 2025 by the American Institute of Architects. Warning: This AIA MasterSpec-based document is protected by U.S. Copyright Law and International Treaties. It was created by "Michael Shilale Architects, LLP" for "Renovation of Rockland Green Administrative Headquarters and Construction of an Immersive Theatre Experience". A valid, current MasterSpec license is required for editing and use of this document for any other project.(22360)

5. Paint cut edges of panel remaining exposed after installation; match color of exposed panel surfaces using coating recommended in writing for this purpose by acoustical panel manufacturer.

3.4 ERECTION TOLERANCES

A. Suspended Ceilings: Install main and cross runners level to a tolerance of 1/8 inch in 12 feet , non-cumulative.

B. Moldings and Trim: Install moldings and trim to substrate and level with ceiling suspension system to a tolerance of 1/8 inch in 12 feet , non-cumulative.

3.5 FIELD QUALITY CONTROL

A. Special Inspections: Owner will engage a qualified special inspector to perform the following special inspections:

1. Periodic inspection during the installation of suspended ceiling grids according to ASCE/SEI 7.

B. Testing Agency: Owner will engage a qualified testing agency to perform tests and inspections.

C. Acoustical panel ceiling hangers, anchors, and fasteners will be considered defective if they do not pass tests and inspections.

3.6 CLEANING

A. Clean exposed surfaces of acoustical panel ceilings, including trim, edge moldings, and suspension-system members. Comply with manufacturer's written instructions for cleaning and touchup of minor finish damage.

B. Remove and replace ceiling components that cannot be successfully cleaned and repaired to permanently eliminate evidence of damage.

END OF SECTION 095113

Copyright © 2025 by the American Institute of Architects. Warning: This AIA MasterSpec-based document is protected by U.S. Copyright Law and International Treaties. It was created by "Michael Shilale Architects, LLP" for "Renovation of Rockland Green Administrative Headquarters and Construction of an Immersive Theatre Experience". A valid, current MasterSpec license is required for editing and use of this document for any other project.(22360)

SECTION 096500 – MULTILAYER/RIGID CORE FLOORING

PART 1 GENERAL

1.01 SUMMARY

A. Section Includes
1. Multilayer / Rigid Core Flooring
2. Installation Accessories
   a. T-Moldings and Transition Profiles
   b. Cleaners

B. Related Requirements
1. Section 01 4000, Quality Requirements
2. Section 01 6116, Volatile Organic Compound (VOC) Content Restrictions: SCS FloorScore® certification documentation
3. Section 01 7000, Execution & Closeout Requirements
4. Section 01 7419, Construction Waste Management & Disposal
5. Section 07 9513, Expansion Joint Cover Assemblies
6. Section 07 9200, Joint Sealants

1.02 REFERENCE ORGANIZATIONS & STANDARDS

A. Organizations
1. American National Standards Institute (ANSI) - www.ansi.org
2. APA-The Engineered Wood Association (Formerly American Plywood Association) - www.apawood.org
3. ASTM International (formerly known as American Society for Testing and Materials) - www.astm.org
4. California Air Resources Board (CARB) - www.arb.ca.gov
5. California Office of Environmental Health Hazard Assessment (OEHHA) - www.oehha.ca.gov
6. Canada Green Building Council (CaGBC) - www.cagbc.org
7. Collaborative for High Performance Schools (CHPS) - www.chps.net
8. Flooring Contractors Association (FCICA) - www.fcica.com
9. Green Building Initiative (GBI) - www.thegbi.org
10. Health Product Declaration Collaborative (HPDC) - www.hpd-collaborative.org
11. International Interior Design Association (IIDA) - www.iida.org
12. International Living Future Institute (ILFI) - https://living-future.org
13. International WELL Building Institute (IWBI) - www.wellcertified.com
14. Multilayer Flooring Association (MFA) - www.multilayerflooringassociation.com
15. National Fire Protection Association (NFPA) - www.nfpa.org
16. National Science Foundation (NSF) - www.nsf.gov
17. North American Association of Floor Covering Distributors (NAFCD) - www.nafcd.org
18. North American Laminate Flooring Association (NALFA) - www.nalfa.com
19. Resilient Floor Covering Institute (RFCI) - www.rfci.com
20. SCS Global Services (formerly Scientific Certification Systems, Inc.) - www.scsglobalservices.com
21. Southface Energy Institute - www.southface.org
22. U.S. Consumer Product Safety Commission (CPSC) - www.cpsc.gov

23. U.S. Environmental Protection Agency (EPA) - www.epa.gov
24. U.S. Green Building Council (USGBC) - www.usgbc.org
25. World Floor Covering Association (WFCA) - www.wfca.org

B. Standards
1. ASTM C109/C109M - Standard Test Method for Compressive Strength of Hydraulic Cement Mortars
2. ASTM D2047 - Standard Test Method for Static Coefficient of Friction of Polish-Coated Flooring Surfaces as Measured by the James Machine
3. ASTM D4060 - Standard Test Method for Abrasion Resistance of Organic Coatings by the Taber Abraser
4. ASTM D5116 - Standard Guide for Small-Scale Environmental Chamber Determinations of Organic Emissions from Indoor Materials/Products
5. ASTM D7823 - Standard Test Method for Determination of Low Level, Regulated Phthalates in Poly (Vinyl Chloride) Plastics by Thermal Desorption-Gas Chromatography/Mass Spectrometry
6. ASTM E413 - Classification for Rating Sound Insulation
7. ASTM E492 - Standard Test Method for Laboratory Measurement of Impact Sound Transmission Through Floor-Ceiling Assemblies Using the Tapping Machine
8. ASTM E648/NFPA 253 - Standard Test Method for Critical Radiant Flux of Floor Covering Systems Using a Radiant Heat Energy Source
9. ASTM E662/NFPA 258 - Standard Test Method for Specific Optical Density of Smoke Generated by Solid Materials
10. ASTM E90 - Standard Test Method for Laboratory Measurement of Airborne Sound Transmission Loss of Building Partitions and Elements
11. ASTM E989 - Standard Classification for Determination of Impact Insulation Class (IIC)
12. ASTM F1514 - Standard Test Method for Measuring Heat Stability of Resilient Flooring by Color Change
13. ASTM F1515 - Standard Test Method for Measuring Light Stability of Resilient Flooring by Color Change
14. ASTM F1869 - Standard Test Method for Measuring Moisture Vapor Emission Rate of Concrete Subfloor Using Anhydrous Calcium Chloride
15. ASTM F2170 - Standard Test Method for Determining Relative Humidity in Concrete Floor Slabs Using in situ Probes
16. ASTM F2199 - Standard Test Method for Determining Dimensional Stability of Resilient Floor Tile after Exposure to Heat
17. ASTM F410 - Standard Test Method for Wear Layer Thickness of Resilient Floor Coverings by Optical Measurement
18. ASTM F710 - Standard Practice for Preparing Concrete Floors to Receive Resilient Flooring
19. ASTM F925 - Standard Test Method for Resistance to Chemicals of Resilient Flooring
20. ASTM F963 - Standard Consumer Safety Specification for Toy Safety (Sec. 4.3.5.1(2) - Permissible Heavy Metal Content Levels)
21. ASTM F970 - Standard Test Method for Static Load Limit
22. CHPS/CA Section 01350 - California Standard Section 01350 Specification for evaluating and restricting VOC (Volatile Organic Compound) emissions for indoor air
23. CPSC-CH-C1001-09.3 - Standard Operating Procedure for Determination of Phthalates (Per U.S. Consumer Product Safety Commission)

24. FloorScore® - Tests to the CA Section 01350 Specification, which includes the Chronic Reference Exposure Levels (CRELs) concentrations established by the California OEHHA and procedures developed by the US EPA
25. NALFA Standards Publication LF 01-2011 - Laminate Flooring Specifications and Test Methods
26. NSF/ANSI 332 - Sustainability Assessment for Resilient Floor Coverings

1.03 SUBMITTALS

A. See below - Administrative Requirements, for submittal procedures.
B. Product Data
   1. Technical Data
   2. Installation & Maintenance
   3. Warranty
   4. Safety Data Sheets (SDS) for accessories
C. Selection Samples: Submit manufacturer's complete set of color samples for Architect's initial selection.
D. Verification Samples: Submit two samples, 4 inches x 4 inches (101mm x 101mm) in size, illustrating color and pattern for each multilayer / rigid core flooring product specified.

1.04 QUALITY ASSURANCE

A. Comply with applicable laws and possess valid licenses, registrations, and/or certificates required by federal law, including but not limited to licenses, registrations, and/or certificates required to:
   1. Conduct business in the designated locale.
   2. Perform the contract work it seeks to perform.
B. Manufacturer Qualifications: Company specializing in manufacturing products specified in this section, with not less than ten years of documented experience.
C. Installer Qualifications: Professional-flooring contractors showing successful installations in similar size and scope. Provide technical certifications, qualifications and resources, including equipment, personnel and financial resources, to perform the referenced contract.

1.05 WARRANTY

A. See Section 01 7800, Closeout Submittals, for additional warranty requirements.
B. Aspecta® Ten Warranty - 25-Year Limited Non-Prorated Commercial Material Warranty. Coverage includes:
   1. 100% Cost of Material for the entire duration of Warranty (25 Years).
   2. Pro-Rated Cost of Labor (Fair-Market Value) for the first 10 Years.
   3. One-Time Transferability of Warranty.

1.06 DELIVERY, STORAGE, AND HANDLING

A. Upon receipt, immediately remove any shrink-wrap and check material for damage, and that the material is of the correct style, color, quantity and run number(s).
B. General Storage
   1. Store all materials flat and off of the floor in an acclimatized, weather-tight space between 50°-100°F (10°-38°C).
   2. Do not double stack pallets.

1.07 FIELD CONDITIONS

A. Acclimate material at jobsite between 50°-100°F (10°-38°C) and 40%-60% RH for 48 hours prior to installation. Temperature and relative humidity should also be maintained at the same levels during installation, and after installation.
B. Spread unopened cartons no more than 6 cartons high and at least 4 inches (101mm) apart.
C. Keep away from heating and cooling ducts and direct sunlight.

D. If permanent HVAC is not operational, temporary means should be used to maintain the recommended temperature and relative humidity levels.
E. Close areas to traffic during installation of flooring and accessories.

PART 2 PRODUCTS

2.01 MANUFACTURERS
A. Metroflor Corporation
1. Address: 15 Oakwood Avenue, Norwalk, CT 06850.
2. Contact: To find the Aspecta® Commercial Sales Specialist that services your area – visit http://www.aspectaflooring.com/industry-tools/representative-search/.

2.02 MULTILAYER / RIGID CORE FLOORING
A. Aspecta® Ten - Multilayer / Rigid Core Flooring
B. Patterns
1. Pattern: Talley Oak
2. Pattern No. 0412416
3. Color: Light Grey
4. Emboss: In-Register
5. Size: 8.66 inches x 59.45 inches (220mm x 1510mm)
C. Physical Properties:
1. Construction: Multilayer / Rigid Core Flooring - Phthalate-Free, Formaldehyde-Free, and made from 100% Virgin Vinyl.
2. Wear Layer Thickness: 28mil (0.7mm).
3. Rigid Core: 0.197 inch (5.0mm) ISOCORE Technology® (Extruded Vinyl Core).
4. Top Layer: 0.118 inch (3.0mm) Luxury Vinyl Tile (LVT).
5. Underlayment: 0.079 inch (2.0mm) Pre-Attached IXPE with Ultra-Fresh.
6. Total Thickness (Gauge): 0.394 inch (10.0mm).
7. Finish: Urethane with Enhanced Ceramic Bead (ECB) and Ultra-Fresh.
D. Manufacturing, Performance, and Safety Standards
1. ASTM F410, Wear Layer Thickness - Passes Requirements for Commercial Classification.
2. ASTM F2199, Dimensional Stability - Surpasses Requirements.
3. ASTM F925, Chemical Resistance - Surpasses Requirements.
4. ASTM F1514, Resistance to Heat - Surpasses Requirements.
5. ASTM F1515, Resistance to Light - Surpasses Requirements.
6. ASTM E648 / NFPA 253, Critical Radiant Flux - Class I.
7. ASTM E662 / NFPA 258, Smoke Density (Flaming & Non-Flaming) - Passes Requirements.
8. CHPS/CA Section 01350 & ASTM D5116 - Passes Requirements.
9. ASTM F963, Sec. 4.3.5.2(2)(B), Heavy Metals - Passes Requirements.
10. ASTM D2047, Coefficient of Friction (Dry) - ≥0.6.
11. ASTM F970, Static Load Limit - ≥650 Lbs. (Surpasses Requirements).
12. ASTM D4060, Abrasion Resistance - Average of 27,500 cycles (Varies with Emboss).
13. ASTM D7823/CPSC-CH-C1001-09.3, Phthalates - Meets CPSIA Guidelines.
14. ASTM E90 & ASTM E413, Airborne Sound Transmission Loss - Sound Transmission Class (STC) 60.
15. ASTM E492 & ASTM E989, Impact Sound Transmission (Floor-Ceiling Assemblies) - Impact Insulation Class (IIC) 69.
16. ASTM G21, Antifungal Activity - Top Surface (LVT) - 1 (Traces of Growth; < 10% Growth); Bottom Surface (Underlayment) - 0-1 (No Growth to Traces of Growth; 0 - <10% Growth).

17. NALFA 3.2, Thickness Swell - Passes Requirements for Classes 1-4.
18. NALFA 3.5, Large Ball Impact Resistance - Passes Requirements for Classes 1-4.
19. NALFA 3.6, Small Ball (Dart) Impact Resistance - Passes Requirements for Classes 1-4.
20. NALFA 3.10, Surface Bonding - Passes Requirements for Classes 1-4.

2.03 ACCESSORIES

A. T-Moldings and Transition Profiles
   1. Contact the manufacturer for more information on the recommended T-Moldings and Transition Profiles:
      a. Aspecta® Ten T-Molding
      b. Aspecta® Ten Reducer
      c. Aspecta® Ten End Molding
      d. Aspecta® Ten Stair Molding
      e. CS Expansion Joint: GFS
B. Cleaners
   1. Refer to the Aspecta® Ten Installation Guide/Manual for full details on the recommended Prevail® Cleaners:
      a. Prevail® 1-Step Neutral Cleaner
      b. Prevail® Ready-to-Use Neutral Cleaner
      c. Prevail® Scratch Remover

PART 3 EXECUTION

3.01 EXAMINATION PER SECTION 01 7000 AND AS FOLLOWS:

A. Install flooring after other operations (including painting) have been completed.
B. Acceptance of Conditions: Carefully examine all installation areas with Installer/Applicator present, for compliance with requirements affecting Work performance.
   1. Verify that field measurements, product, substrates, surfaces, structural support, tolerances, levelness, temperature, humidity, moisture content level, pH, cleanliness and other conditions are as required by the manufacturer, and ready to receive Work.
C. Verify that substrate is contaminant-free (including old adhesives and abatement chemicals).
D. Test substrates as required by manufacturer to verify proper conditions exist.
   1. Concrete:
      a. Moisture testing: Perform either the In-Situ Relative Humidity (RH) test (ASTM F2170) or Moisture Vapor Emission Rate (MVER) test (ASTM F1869). NOTE: Refer to the Manufacturer's Installation Guide/Manual for the maximum allowable substrate moisture content. Substrates above the maximum allowable moisture content will require a moisture mitigation system.
      b. Perform alkalinity testing per ASTM F710 to verify pH level is between 7 to 9.
   2. Wood:
      a. Shall be dry, clean, structurally sound, and installed per manufacturer’s installation instructions.
      b. Test wood subfloors using a suitable wood moisture pin-meter.
      c. The maximum moisture content is 14%.
      d. Proceed with installation only after satisfactory conditions have been met.
E. Verify that required floor-mounted utilities are in correct location.

3.02 PREPARATION

A. Prior to installation, the flooring installer should plan and attend an on-site construction meeting with the General Contractor, Architect and Property Owner to review all requirements and inspect site conditions as outlined in the manufacturer's installation document, as well as to re-

view the requirements of ASTM F710 and any relevant building codes, or local, state, or national regulations.

B. Flooring installation should not begin until all site conditions have been assessed, testing has been completed and subfloor conditions have been approved.

C. Prepare per manufacturer's written instructions, and as follows:
   1. Concrete Substrates: Prepare substrate per ASTM F710.
      a. Verify that subfloor is clean, flat, smooth, and free of dirt, rust, paint, oil, wax or any contaminant.
      b. Mechanically remove contaminants, such as old adhesives, soap, wax, oil, etc.
         1) Do not use solvents or adhesive removers.
      c. Expansion joints, isolation joints, or other moving joints must be honored and must not be filled. However, floating floor systems (such as Aspecta® Ten) can be installed over such joint systems, so long as there is no height variation, and as long as the joints between two pieces of Aspecta® Ten flooring are not directly laid over expansion joints, isolation joints, or other moving joints. Expansion joint covering systems should be detailed by the architect or engineer, and based upon intended usage and aesthetic considerations.
      d. Surface cracks, grooves, depressions, control joints or other non-moving joints, and other irregularities shall be filled or smoothed with high-quality Portland Cement or Calcium Aluminate based patching or underlayment compound for filling or smoothing, or both.
      e. Self-leveling underlayments: Provide a dry and smoothly-sanded underlayment substrate ready for installation of multilayer / rigid core flooring. Underlayment compound shall be moisture-resistant, mildew-resistant, and alkali-resistant and must have a minimum of 3,000 psi compressive strength or greater per ASTM C109/C109M.
      f. Lightweight concrete shall have a compressive strength greater than 90lbs per cubic foot with minimum compression strength of 2,500 psi or greater.
   2. Wood Substrates or Panel Type Underlayment:
      a. Wood subfloors require a minimum of 18 inches (457mm) of well-ventilated space beneath.
         1) Crawl spaces shall be insulated and protected by a vapor barrier.
   3. Existing and other substrates:
      a. Refer to manufacturer's professional installation guide and or contact manufacturer, as special conditions may exist.

3.03 INSTALLATION

A. Installation per manufacturer’s written instructions, and as follows:
   1. Layout shall be specified by Architect, Designer, or End User.
   2. Follow layout and ensure installation reference lines are square.
   3. Check cartons for and do NOT mix dye lots.
   4. Subfloor expansion joints: Locate expansion, isolation, and other moving joints prior to installation.
      a. Do not fill subfloor expansion, isolation, and other moving joints with patching compound.
   5. Required in rooms greater than 100 feet (30.5 meters) in either direction:
      a. Install T-Moldings per manufacturer’s written instructions and SECTION 01 7000.
   6. Install other transition profiles (as needed) per manufacturer’s written instructions.
      a. Reducers, End Moldings, and Stair Moldings are also available for Aspecta® Ten (in addition to T-Moldings).

7. Aspecta® Ten is to be installed as a floating floor system and must be free to move as a whole sheet in response to changes in temperature. It must not be glued, nailed, or fastened to the substrate, walls or fixed to any part of the building structure. Install permanent fixtures (such as walls, partitions, shelving, cabinets, displays, counters, tracks for transition profiles, and similar items) first, then fit Aspecta® Ten around them, leaving a space for expansion and contraction. Fill expansion spaces around potentially wet areas with premium, waterproof, 100% silicone caulk. Always promptly remove standing water, pet urine, and other liquids.

3.04 FIELD QUALTITY CONTROL

A. Site tests and Inspections and as follows:
   1. Inspect flooring installation for non-conforming work, including (but not limited to) the following:
      a. Improper placement of T-Moldings.
      b. Improper use of transition profiles.
      c. Lack of proper expansion space around perimeters and all fixed objects.
      d. Improper substrate preparation (as indicated by telegraphing).
      e. Damage to tiles, including: dents/indentations, cuts, cracks, burns or punctures.
B. Non-conforming work per General Conditions and as follows:
   1. Repair or replace damaged material if not acceptable to the Architect.

3.05 CLEANING

A. Waste Management
B. Provide Progress Cleaning per manufacturer's written instructions, and as follows:
   1. Work Areas: Clean areas where work is in progress to the level of cleanliness necessary for proper execution of the work.
      b. Clean and protect completed construction until Substantial Completion.
   2. Site: Maintain project site free of waste materials and debris.
C. Provide Final Cleaning immediately prior to Substantial Completion inspection per manufacturer's written instructions.
   1. Protection: Remove manufacturer's and other installed protection immediately prior to Substantial Completion inspection, unless required otherwise.
   2. Clean floor with a neutral 6-8 pH cleaner.

3.06 MAINTENANCE

A. Initial maintenance per flooring manufacturer’s written instructions and as follows:
   1. Sweep, dust mop or vacuum the floor thoroughly to remove all loose dirt, dust, grit and debris. Do not use vacuums with a beater bar assembly.
   2. Damp mop the floor using a Cleaner recommended by the flooring Manufacturer.
   3. If necessary, scrub the floor using an auto scrubber or rotary machine (300 rpm or less) with a Cleaner recommended by the flooring Manufacturer... using the proper dilution ratio and the appropriate scrubbing brush or pad.
   4. Thoroughly rinse the entire floor with fresh, clean water. Remove the dirty residue with a wet-vacuum or clean mop and allow the floor to dry completely.

3.07 PROTECTION

A. Protect materials from construction operations until date of Final Completion or Owner occupancy, whichever occurs first.
   1. Protect finished floor from abuse and damage by using heavy, non-staining kraft paper, drop cloths, or equivalent. Use additional, non-damaging protective materials, as needed.

END OF SECTION 096500

SECTION 096513 - RESILIENT BASE AND ACCESSORIES

PART 1 - GENERAL

1.1 RELATED DOCUMENTS

A. Drawings and general provisions of the Contract, including General and Supplementary Conditions and Division 01 Specification Sections, apply to this Section.

1.2 SUMMARY

A. Section Includes:

1. Thermoset-rubber base.
2. Rubber molding accessories.

1.3 ACTION SUBMITTALS

A. Product Data: For each type of product.

B. Samples: For each exposed product and for each color and texture specified, not less than 12 inches long.

1.4 MAINTENANCE MATERIAL SUBMITTALS

A. Furnish extra materials , from the same product run, that match products installed and that are packaged with protective covering for storage and identified with labels describing contents.

1. Furnish not less than 10 linear feet for every 500 linear feet or fraction thereof, of each type, color, pattern, and size of resilient product installed.

1.5 DELIVERY, STORAGE, AND HANDLING

A. Store resilient products and installation materials in dry spaces protected from the weather, with ambient temperatures maintained within range recommended by manufacturer, but not less than 50 deg F or more than 90 deg F.

1.6 FIELD CONDITIONS

A. Maintain ambient temperatures within range recommended by manufacturer, but not less than 70 deg F or more than 95 deg F , in spaces to receive resilient products during the following periods:

Copyright © 2025 by the American Institute of Architects. Warning: This AIA MasterSpec-based document is protected by U.S. Copyright Law and International Treaties. It was created by "Michael Shilale Architects, LLP" for "Renovation of Rockland Green Administrative Headquarters and Construction of an Immersive Theatre Experience". A valid, current MasterSpec license is required for editing and use of this document for any other project.(22360)

1. 48 hours before installation.
2. During installation.
3. 48 hours after installation.

B. After installation and until Substantial Completion, maintain ambient temperatures within range recommended by manufacturer, but not less than 55 deg F or more than 95 deg F .

C. Install resilient products after other finishing operations, including painting, have been completed.

PART 2 - PRODUCTS

2.1 PERFORMANCE REQUIREMENTS

2.2 THERMOSET-RUBBER BASE

A. Product Standard: ASTM F 1861, Type TS (rubber, vulcanized thermoset), Group I (solid, homogeneous).

1. Style and Location:
   a. Style B, Cove: Provide in areas with resilient floor coverings .

B. Thickness: 0.125 inch.

C. Height: 4 inches .

D. Lengths: Cut lengths 48 inches long or coils in manufacturer's standard length.

E. Outside Corners: Preformed .

F. Inside Corners: Preformed .

G. Colors: As indicated by manufacturer's designations .

2.3 RUBBER MOLDING ACCESSORY

A. Description: Rubber transition strips .

B. Profile and Dimensions: As indicated .

C. Locations: Provide rubber molding accessories in areas indicated .

D. Colors and Patterns: As indicated by manufacturer's designations .

Copyright © 2025 by the American Institute of Architects. Warning: This AIA MasterSpec-based document is protected by U.S. Copyright Law and International Treaties. It was created by "Michael Shilale Architects, LLP" for "Renovation of Rockland Green Administrative Headquarters and Construction of an Immersive Theatre Experience". A valid, current MasterSpec license is required for editing and use of this document for any other project.(22360)

2.4 INSTALLATION MATERIALS

A. Trowelable Leveling and Patching Compounds: Latex-modified, portland-cement-based or blended hydraulic-cement-based formulation provided or approved by resilient-product manufacturer for applications indicated.

B. Adhesives: Water-resistant type recommended by resilient-product manufacturer for resilient products and substrate conditions indicated.

PART 3 - EXECUTION

3.1 EXAMINATION

A. Examine substrates, with Installer present, for compliance with requirements for maximum moisture content and other conditions affecting performance of the Work.

1. Verify that finishes of substrates comply with tolerances and other requirements specified in other Sections and that substrates are free of cracks, ridges, depressions, scale, and foreign deposits that might interfere with adhesion of resilient products.

B. Proceed with installation only after unsatisfactory conditions have been corrected.

1. Installation of resilient products indicates acceptance of surfaces and conditions.

3.2 PREPARATION

A. Prepare substrates according to manufacturer's written instructions to ensure adhesion of resilient products.

B. Concrete Substrates for Resilient Stair Accessories: Prepare horizontal surfaces according to ASTM F 710.

1. Verify that substrates are dry and free of curing compounds, sealers, and hardeners.
2. Remove substrate coatings and other substances that are incompatible with adhesives and that contain soap, wax, oil, or silicone, using mechanical methods recommended by manufacturer. Do not use solvents.
3. Alkalinity and Adhesion Testing: Perform tests recommended by manufacturer. Proceed with installation only after substrate alkalinity falls within range on pH scale recommended by manufacturer in writing, but not less than 5 or more than 9 10 pH.
4. Moisture Testing: Perform tests so that each test area does not exceed 200 sq. ft. , and perform no fewer than three tests in each installation area and with test areas evenly spaced in installation areas.
   a. Anhydrous Calcium Chloride Test: ASTM F 1869. Proceed with installation only after substrates have maximum moisture-vapor-emission rate of 3 lb of water/1000 sq. ft. in 24 hours.

Copyright © 2025 by the American Institute of Architects. Warning: This AIA MasterSpec-based document is protected by U.S. Copyright Law and International Treaties. It was created by "Michael Shilale Architects, LLP" for "Renovation of Rockland Green Administrative Headquarters and Construction of an Immersive Theatre Experience". A valid, current MasterSpec license is required for editing and use of this document for any other project.(22360)

b. Relative Humidity Test: Using in-situ probes, ASTM F 2170. Proceed with installation only after substrates have a maximum 75 percent relative humidity level measurement.

C. Fill cracks, holes, and depressions in substrates with trowelable leveling and patching compound; remove bumps and ridges to produce a uniform and smooth substrate.

D. Do not install resilient products until materials are the same temperature as space where they are to be installed.

1. At least 48 hours in advance of installation, move resilient products and installation materials into spaces where they will be installed.

E. Immediately before installation, sweep and vacuum clean substrates to be covered by resilient products.

3.3 RESILIENT BASE INSTALLATION

A. Comply with manufacturer's written instructions for installing resilient base.

B. Apply resilient base to walls, columns, pilasters, casework and cabinets in toe spaces, and other permanent fixtures in rooms and areas where base is required.

C. Install resilient base in lengths as long as practical without gaps at seams and with tops of adjacent pieces aligned.

D. Tightly adhere resilient base to substrate throughout length of each piece, with base in continuous contact with horizontal and vertical substrates.

E. Do not stretch resilient base during installation.

F. On masonry surfaces or other similar irregular substrates, fill voids along top edge of resilient base with manufacturer's recommended adhesive filler material.

G. Preformed Corners: Install preformed corners before installing straight pieces.

3.4 RESILIENT ACCESSORY INSTALLATION

A. Comply with manufacturer's written instructions for installing resilient accessories.

B. Resilient Stair Accessories:

1. Tightly adhere to substrates throughout length of each piece.
2. For treads installed as separate, equal-length units, install to produce a flush joint between units.

Copyright © 2025 by the American Institute of Architects. Warning: This AIA MasterSpec-based document is protected by U.S. Copyright Law and International Treaties. It was created by "Michael Shilale Architects, LLP" for "Renovation of Rockland Green Administrative Headquarters and Construction of an Immersive Theatre Experience". A valid, current MasterSpec license is required for editing and use of this document for any other project.(22360)

C. Resilient Molding Accessories: Butt to adjacent materials and tightly adhere to substrates throughout length of each piece. Install reducer strips at edges of floor covering that would otherwise be exposed.

3.5 CLEANING AND PROTECTION

A. Comply with manufacturer's written instructions for cleaning and protecting resilient products.

B. Perform the following operations immediately after completing resilient-product installation:

1. Remove adhesive and other blemishes from surfaces.
2. Sweep and vacuum horizontal surfaces thoroughly.
3. Damp-mop horizontal surfaces to remove marks and soil.

C. Protect resilient products from mars, marks, indentations, and other damage from construction operations and placement of equipment and fixtures during remainder of construction period.

D. Floor Polish: Remove soil, adhesive, and blemishes from resilient stair treads before applying liquid floor polish.

1. Apply one coat(s).

E. Cover resilient products subject to wear and foot traffic until Substantial Completion.

END OF SECTION 096513

Copyright © 2025 by the American Institute of Architects. Warning: This AIA MasterSpec-based document is protected by U.S. Copyright Law and International Treaties. It was created by "Michael Shilale Architects, LLP" for "Renovation of Rockland Green Administrative Headquarters and Construction of an Immersive Theatre Experience". A valid, current MasterSpec license is required for editing and use of this document for any other project.(22360)

SECTION 096519 - RESILIENT TILE FLOORING

PART 1 - GENERAL

1.1 RELATED DOCUMENTS

A. Drawings and general provisions of the Contract, including General and Supplementary Conditions and Division 01 Specification Sections, apply to this Section.

1.2 SUMMARY

A. Section Includes:

1. Vinyl composition floor tile.

1.3 ACTION SUBMITTALS

A. Product Data: For each type of product.

B. Samples: Full-size units of each color, texture, and pattern of floor tile required.

1. For heat-welding bead, manufacturer's standard-size Samples, but not less than 9 inches long, of each color required.

1.4 INFORMATIONAL SUBMITTALS

1.5 CLOSEOUT SUBMITTALS

A. Maintenance Data: For each type of floor tile to include in maintenance manuals.

1.6 MAINTENANCE MATERIAL SUBMITTALS

A. Furnish extra materials , from the same product run, that match products installed and that are packaged with protective covering for storage and identified with labels describing contents.

1. Floor Tile: Furnish one box for every 50 boxes or fraction thereof, of each type, color, and pattern of floor tile installed.

1.7 QUALITY ASSURANCE

A. Installer Qualifications: An entity that employs installers and supervisors who are competent in techniques required by manufacturer for floor tile installation and seaming method indicated.

Copyright © 2025 by the American Institute of Architects. Warning: This AIA MasterSpec-based document is protected by U.S. Copyright Law and International Treaties. It was created by "Michael Shilale Architects, LLP" for "Renovation of Rockland Green Administrative Headquarters and Construction of an Immersive Theatre Experience". A valid, current MasterSpec license is required for editing and use of this document for any other project.(22360)

1. Engage an installer who employs workers for this Project who are trained or certified by floor tile manufacturer for installation techniques required.

1.8 DELIVERY, STORAGE, AND HANDLING

A. Store floor tile and installation materials in dry spaces protected from the weather, with ambient temperatures maintained within range recommended by manufacturer, but not less than 50 deg F or more than 90 deg F. Store floor tiles on flat surfaces.

1.9 FIELD CONDITIONS

A. Maintain ambient temperatures within range recommended by manufacturer, but not less than 70 deg F or more than 95 deg F , in spaces to receive floor tile during the following periods:

1. 48 hours before installation.
2. During installation.
3. 48 hours after installation.

B. After installation and until Substantial Completion, maintain ambient temperatures within range recommended by manufacturer, but not less than 55 deg F or more than 95 deg F .

C. Close spaces to traffic during floor tile installation.

D. Close spaces to traffic for 48 hours after floor tile installation.

E. Install floor tile after other finishing operations, including painting, have been completed.

PART 2 - PRODUCTS

2.1 PERFORMANCE REQUIREMENTS

A. Fire-Test-Response Characteristics: For resilient floor tile, as determined by testing identical products according to ASTM E 648 or NFPA 253 by a qualified testing agency.

1. Critical Radiant Flux Classification: Class I, not less than 0.45 W/sq. cm.

2.2 VINYL COMPOSITION FLOOR TILE

A. Tile Standard: ASTM F 1066, Class 2, through pattern .

B. Wearing Surface: Smooth .

C. Thickness: 0.125 inch .

D. Size: 12 by 12 inches.

Copyright © 2025 by the American Institute of Architects. Warning: This AIA MasterSpec-based document is protected by U.S. Copyright Law and International Treaties. It was created by "Michael Shilale Architects, LLP" for "Renovation of Rockland Green Administrative Headquarters and Construction of an Immersive Theatre Experience". A valid, current MasterSpec license is required for editing and use of this document for any other project.(22360)

E. Colors and Patterns: to be selected from manufactures standard colors .

2.3 INSTALLATION MATERIALS

A. Trowelable Leveling and Patching Compounds: Latex-modified, portland-cement-based or blended hydraulic-cement-based formulation provided or approved by floor tile manufacturer for applications indicated.

B. Adhesives: Water-resistant type recommended by floor tile and adhesive manufacturers to suit floor tile and substrate conditions indicated.

PART 3 - EXECUTION

3.1 EXAMINATION

A. Examine substrates, with Installer present, for compliance with requirements for maximum moisture content and other conditions affecting performance of the Work.

1. Verify that finishes of substrates comply with tolerances and other requirements specified in other Sections and that substrates are free of cracks, ridges, depressions, scale, and foreign deposits that might interfere with adhesion of floor tile.

B. Proceed with installation only after unsatisfactory conditions have been corrected.

3.2 PREPARATION

A. Prepare substrates according to floor tile manufacturer's written instructions to ensure adhesion of resilient products.

B. Concrete Substrates: Prepare according to ASTM F 710.

1. Verify that substrates are dry and free of curing compounds, sealers, and hardeners.
2. Remove substrate coatings and other substances that are incompatible with adhesives and that contain soap, wax, oil, or silicone, using mechanical methods recommended by floor tile manufacturer. Do not use solvents.
3. Alkalinity and Adhesion Testing: Perform tests recommended by floor tile manufacturer. Proceed with installation only after substrate alkalinity falls within range on pH scale recommended by manufacturer in writing, but not less than 5 or more than 10 pH.
4. Moisture Testing: Perform tests so that each test area does not exceed 200 sq. ft. , and perform no fewer than three tests in each installation area and with test areas evenly spaced in installation areas.
   a. Anhydrous Calcium Chloride Test: ASTM F 1869. Proceed with installation only after substrates have maximum moisture-vapor-emission rate of 3 lb of water/1000 sq. ft. in 24 hours.

Copyright © 2025 by the American Institute of Architects. Warning: This AIA MasterSpec-based document is protected by U.S. Copyright Law and International Treaties. It was created by "Michael Shilale Architects, LLP" for "Renovation of Rockland Green Administrative Headquarters and Construction of an Immersive Theatre Experience". A valid, current MasterSpec license is required for editing and use of this document for any other project.(22360)

b. Relative Humidity Test: Using in-situ probes, ASTM F 2170. Proceed with installation only after substrates have a maximum 75 percent relative humidity level measurement.

C. Fill cracks, holes, and depressions in substrates with trowelable leveling and patching compound; remove bumps and ridges to produce a uniform and smooth substrate.

D. Do not install floor tiles until materials are the same temperature as space where they are to be installed.

1. At least 48 hours in advance of installation, move resilient floor tile and installation materials into spaces where they will be installed.

E. Immediately before installation, sweep and vacuum clean substrates to be covered by resilient floor tile.

3.3 FLOOR TILE INSTALLATION

A. Comply with manufacturer's written instructions for installing floor tile.

B. Lay out floor tiles from center marks established with principal walls, discounting minor offsets, so tiles at opposite edges of room are of equal width. Adjust as necessary to avoid using cut widths that equal less than one-half tile at perimeter.

1. Lay tiles square with room axis .

C. Match floor tiles for color and pattern by selecting tiles from cartons in the same sequence as manufactured and packaged, if so numbered. Discard broken, cracked, chipped, or deformed tiles.

1. Lay tiles with grain direction alternating in adjacent tiles (basket-weave pattern) .

D. Scribe, cut, and fit floor tiles to butt neatly and tightly to vertical surfaces and permanent fixtures including built-in furniture, cabinets, pipes, outlets, and door frames.

E. Extend floor tiles into toe spaces, door reveals, closets, and similar openings. Extend floor tiles to center of door openings.

F. Maintain reference markers, holes, and openings that are in place or marked for future cutting by repeating on floor tiles as marked on substrates. Use chalk or other nonpermanent marking device.

G. Adhere floor tiles to substrates using a full spread of adhesive applied to substrate to produce a completed installation without open cracks, voids, raising and puckering at joints, telegraphing of adhesive spreader marks, and other surface imperfections.

H. Resilient Terrazzo Accessories: Install according to manufacturer's written instructions.

Copyright © 2025 by the American Institute of Architects. Warning: This AIA MasterSpec-based document is protected by U.S. Copyright Law and International Treaties. It was created by "Michael Shilale Architects, LLP" for "Renovation of Rockland Green Administrative Headquarters and Construction of an Immersive Theatre Experience". A valid, current MasterSpec license is required for editing and use of this document for any other project.(22360)

3.4 CLEANING AND PROTECTION

A. Comply with manufacturer's written instructions for cleaning and protecting floor tile.

B. Perform the following operations immediately after completing floor tile installation:

1. Remove adhesive and other blemishes from surfaces.
2. Sweep and vacuum surfaces thoroughly.
3. Damp-mop surfaces to remove marks and soil.

C. Protect floor tile from mars, marks, indentations, and other damage from construction operations and placement of equipment and fixtures during remainder of construction period.

D. Cover floor tile until Substantial Completion.

END OF SECTION 096519

Copyright © 2025 by the American Institute of Architects. Warning: This AIA MasterSpec-based document is protected by U.S. Copyright Law and International Treaties. It was created by "Michael Shilale Architects, LLP" for "Renovation of Rockland Green Administrative Headquarters and Construction of an Immersive Theatre Experience". A valid, current MasterSpec license is required for editing and use of this document for any other project.(22360)

SECTION 096813 - TILE CARPETING

PART 1 - GENERAL

1.1 RELATED DOCUMENTS

A. Drawings and general provisions of the Contract, including General and Supplementary Conditions and Division 01 Specification Sections, apply to this Section.

1.2 SUMMARY

A. Section Includes:

1. Modular carpet tile.

B. Related Requirements:

1. Section 024119 "Selective Demolition" for removing existing floor coverings.
2. Section 096519 "Resilient Tile Flooring" for resilient wall base and accessories installed with carpet tile.

1.3 PREINSTALLATION MEETINGS

A. Preinstallation Conference: Conduct conference at Project site .

1. Review methods and procedures related to carpet tile installation including, but not limited to, the following:
   a. Review delivery, storage, and handling procedures.
   b. Review ambient conditions and ventilation procedures.
   c. Review subfloor preparation procedures.

1.4 ACTION SUBMITTALS

A. Product Data: For each type of product.

1. Include manufacturer's written data on physical characteristics, durability, and fade resistance.
2. Include manufacturer's written installation recommendations for each type of substrate.

B. Samples: For each of the following products and for each color and texture required. Label each Sample with manufacturer's name, material description, color, pattern, and designation indicated on Drawings and in schedules.

1. Carpet Tile: Full-size Sample.
2. Exposed Edge, Transition, and Other Accessory Stripping: 12-inch- long Samples.

Copyright © 2025 by the American Institute of Architects. Warning: This AIA MasterSpec-based document is protected by U.S. Copyright Law and International Treaties. It was created by "Michael Shilale Architects, LLP" for "Renovation of Rockland Green Administrative Headquarters and Construction of an Immersive Theatre Experience". A valid, current MasterSpec license is required for editing and use of this document for any other project.(22360)

C. Samples for Initial Selection: For each type of carpet tile.

1. Include Samples of exposed edge, transition, and other accessory stripping involving color or finish selection.

D. Product Schedule: For carpet tile. Use same designations indicated on Drawings.

1.5 INFORMATIONAL SUBMITTALS

A. Product Test Reports: For carpet tile, for tests performed by a qualified testing agency.

1.6 CLOSEOUT SUBMITTALS

A. Maintenance Data: For carpet tiles to include in maintenance manuals. Include the following:

1. Methods for maintaining carpet tile, including cleaning and stain-removal products and procedures and manufacturer's recommended maintenance schedule.
2. Precautions for cleaning materials and methods that could be detrimental to carpet tile.

1.7 MAINTENANCE MATERIAL SUBMITTALS

A. Furnish extra materials, from the same product run, that match products installed and that are packaged with protective covering for storage and identified with labels describing contents.

1. Carpet Tile: Full-size units equal to 5 percent of amount installed for each type indicated, but not less than 10 sq. yd..

1.8 QUALITY ASSURANCE

A. Mockups: Build mockups to verify selections made under Sample submittals, to demonstrate aesthetic effects, and to set quality standards for fabrication and installation.

1. Build mockups at locations and in sizes shown on Drawings.
2. Subject to compliance with requirements, approved mockups may become part of the completed Work if undisturbed at time of Substantial Completion.

1.9 DELIVERY, STORAGE, AND HANDLING

A. Comply with the Carpet and Rug Institute's CRI 104.

1.10 FIELD CONDITIONS

A. Comply with the Carpet and Rug Institute's CRI 104 for temperature, humidity, and ventilation limitations.

Copyright © 2025 by the American Institute of Architects. Warning: This AIA MasterSpec-based document is protected by U.S. Copyright Law and International Treaties. It was created by "Michael Shilale Architects, LLP" for "Renovation of Rockland Green Administrative Headquarters and Construction of an Immersive Theatre Experience". A valid, current MasterSpec license is required for editing and use of this document for any other project.(22360)

B. Environmental Limitations: Do not deliver or install carpet tiles until spaces are enclosed and weathertight, wet-work in spaces is complete and dry, and ambient temperature and humidity conditions are maintained at levels planned for building occupants during the remainder of the construction period.

C. Do not install carpet tiles over concrete slabs until slabs have cured and are sufficiently dry to bond with adhesive and concrete slabs have pH range recommended by carpet tile manufacturer.

D. Where demountable partitions or other items are indicated for installation on top of carpet tiles, install carpet tiles before installing these items.

1.11 WARRANTY

A. Special Warranty for Carpet Tiles: Manufacturer agrees to repair or replace components of carpet tile installation that fail in materials or workmanship within specified warranty period.

1. Warranty does not include deterioration or failure of carpet tile due to unusual traffic, failure of substrate, vandalism, or abuse.
2. Failures include, but are not limited to, the following:
   a. More than 10 percent edge raveling, snags, and runs.
   b. Dimensional instability.
   c. Excess static discharge.
   d. Loss of tuft-bind strength.
   e. Loss of face fiber.
   f. Delamination.
3. Warranty Period: 10 years from date of Substantial Completion.

PART 2 - PRODUCTS

2.1 CARPET TILE

A. Manufacturers: Subject to compliance with requirements, provide products by one of the following:

1. Mohawk Group.
2. Shaw Industries Group, Inc.; Berkshire Hathaway Company.
3. Tarkett USA.

B. Color: As selected by Architect from manufacturer's full range .

C. Pattern: see Finish Material Schedule on drawings .

D. Fiber Content: as specified on material finish schedule .

E. Primary Backing/Backcoating: Manufacturer's standard composite materials .

Copyright © 2025 by the American Institute of Architects. Warning: This AIA MasterSpec-based document is protected by U.S. Copyright Law and International Treaties. It was created by "Michael Shilale Architects, LLP" for "Renovation of Rockland Green Administrative Headquarters and Construction of an Immersive Theatre Experience". A valid, current MasterSpec license is required for editing and use of this document for any other project.(22360)

F. Secondary Backing: Manufacturer's standard material .

G. Size: 24 by 24 inches .

H. Applied Treatments:

1. Soil-Resistance Treatment: Manufacturer's standard treatment .
2. Antimicrobial Treatment: Manufacturer's standard treatment that protects carpet tiles as follows:
   a. Antimicrobial Activity: Not less than 2-mm halo of inhibition for gram-positive bacteria, not less than 1-mm halo of inhibition for gram-negative bacteria, and no fungal growth, according to AATCC 174.

I. Performance Characteristics:

1. Appearance Retention Rating: Heavy traffic, 3.0 minimum according to ASTM D7330.
2. Dry Breaking Strength: Not less than 100 lbf according to ASTM D2646.
3. Tuft Bind: Not less than 6.2 lbf according to ASTM D1335.
4. Delamination: Not less than 4 lbf/in. according to ASTM D3936.
5. Dimensional Tolerance: Within 1/32 inch of specified size dimensions, as determined by physical measurement.
6. Dimensional Stability: 0.2 percent or less according to ISO 2551 (Aachen Test).
7. Colorfastness to Crocking: Not less than 4, wet and dry, according to AATCC 165.
8. Colorfastness to Light: Not less than 4 after 40 AFU (AATCC fading units) according to AATCC 16, Option E.
9. Electrostatic Propensity: Less than 3.5 kV according to AATCC 134.

2.2 INSTALLATION ACCESSORIES

A. Trowelable Leveling and Patching Compounds: Latex-modified, hydraulic-cement-based formulation provided or recommended by carpet tile manufacturer.

PART 3 - EXECUTION

3.1 EXAMINATION

A. Examine substrates, areas, and conditions, with Installer present, for compliance with requirements for maximum moisture content, alkalinity range, installation tolerances, and other conditions affecting carpet tile performance.

B. Examine carpet tile for type, color, pattern, and potential defects.

C. Concrete Slabs: Verify that finishes comply with requirements specified in Section 033000 "Cast-in-Place Concrete" and that surfaces are free of cracks, ridges, depressions, scale, and foreign deposits.

Copyright © 2025 by the American Institute of Architects. Warning: This AIA MasterSpec-based document is protected by U.S. Copyright Law and International Treaties. It was created by "Michael Shilale Architects, LLP" for "Renovation of Rockland Green Administrative Headquarters and Construction of an Immersive Theatre Experience". A valid, current MasterSpec license is required for editing and use of this document for any other project.(22360)

1. Moisture Testing: Perform tests so that each test area does not exceed 200 sq. ft. , and perform no fewer than three tests in each installation area and with test areas evenly spaced in installation areas.
   a. Anhydrous Calcium Chloride Test: ASTM F1869. Proceed with installation only after substrates have maximum moisture-vapor-emission rate of 3 lb of water/1000 sq. ft. in 24 hours.
   b. Relative Humidity Test: Using in situ probes, ASTM F2170. Proceed with installation only after substrates have a maximum 75 percent relative humidity level measurement.
   c. Perform additional moisture tests recommended in writing by adhesive and carpet tile manufacturers. Proceed with installation only after substrates pass testing.

D. Wood Subfloors: Verify the following:

1. Underlayment over subfloor complies with requirements specified in Section 061600 "Sheathing."
2. Underlayment surface is free of irregularities and substances that may interfere with adhesive bond or show through surface.

E. Proceed with installation only after unsatisfactory conditions have been corrected.

3.2 PREPARATION

A. General: Comply with the Carpet and Rug Institute's CRI 104 and with carpet tile manufacturer's written installation instructions for preparing substrates indicated to receive carpet tile.

B. Use trowelable leveling and patching compounds, according to manufacturer's written instructions, to fill cracks, holes, depressions, and protrusions in substrates. Fill or level cracks, holes and depressions 1/8 inch wide or wider, and protrusions more than 1/32 inch unless more stringent requirements are required by manufacturer's written instructions.

C. Concrete Substrates: Remove coatings, including curing compounds, and other substances that are incompatible with adhesives and that contain soap, wax, oil, or silicone, without using solvents. Use mechanical methods recommended in writing by adhesive and carpet tile manufacturers.

D. Metal Substrates: Clean grease, oil, soil and rust, and prime if recommended in writing by adhesive manufacturer. Rough sand painted metal surfaces and remove loose paint. Sand aluminum surfaces, to remove metal oxides, immediately before applying adhesive.

E. Broom and vacuum clean substrates to be covered immediately before installing carpet tile.

3.3 INSTALLATION

A. General: Comply with the Carpet and Rug Institute's CRI 104, Section 10, "Carpet Tile," and with carpet tile manufacturer's written installation instructions.

Copyright © 2025 by the American Institute of Architects. Warning: This AIA MasterSpec-based document is protected by U.S. Copyright Law and International Treaties. It was created by "Michael Shilale Architects, LLP" for "Renovation of Rockland Green Administrative Headquarters and Construction of an Immersive Theatre Experience". A valid, current MasterSpec license is required for editing and use of this document for any other project.(22360)

B. Installation Method: As recommended in writing by carpet tile manufacturer .

C. Maintain dye-lot integrity. Do not mix dye lots in same area.

D. Maintain pile-direction patterns recommended in writing by carpet tile manufacturer.

E. Cut and fit carpet tile to butt tightly to vertical surfaces, permanent fixtures, and built-in furniture including cabinets, pipes, outlets, edgings, thresholds, and nosings. Bind or seal cut edges as recommended by carpet tile manufacturer.

F. Extend carpet tile into toe spaces, door reveals, closets, open-bottomed obstructions, removable flanges, alcoves, and similar openings.

G. Maintain reference markers, holes, and openings that are in place or marked for future cutting by repeating on carpet tile as marked on subfloor. Use nonpermanent, nonstaining marking device.

H. Install pattern parallel to walls and borders.

I. Access Flooring: Stagger joints of carpet tiles so carpet tile grid is offset from access flooring panel grid. Do not fill seams of access flooring panels with carpet adhesive; keep seams free of adhesive.

3.4 CLEANING AND PROTECTION

A. Perform the following operations immediately after installing carpet tile:

1. Remove excess adhesive and other surface blemishes using cleaner recommended by carpet tile manufacturer.
2. Remove yarns that protrude from carpet tile surface.
3. Vacuum carpet tile using commercial machine with face-beater element.

B. Protect installed carpet tile to comply with the Carpet and Rug Institute's CRI 104, Section 13.7.

C. Protect carpet tile against damage from construction operations and placement of equipment and fixtures during the remainder of construction period. Use protection methods indicated or recommended in writing by carpet tile manufacturer.

END OF SECTION 096813

Copyright © 2025 by the American Institute of Architects. Warning: This AIA MasterSpec-based document is protected by U.S. Copyright Law and International Treaties. It was created by "Michael Shilale Architects, LLP" for "Renovation of Rockland Green Administrative Headquarters and Construction of an Immersive Theatre Experience". A valid, current MasterSpec license is required for editing and use of this document for any other project.(22360)

SECTION 096816 - SHEET CARPETING

PART 1 - GENERAL

1.1 RELATED DOCUMENTS

A. Drawings and general provisions of the Contract, including General and Supplementary Conditions and Division 01 Specification Sections, apply to this Section.

1.2 SUMMARY

A. Section Includes:

1. Woven carpet.

B. Related Requirements:

1. Section 024119 "Selective Demolition" for removing existing floor coverings.
2. [**Section 096513 "Resilient Base and Accessories"**] [**Section 096519 "Resilient Tile Flooring"**] for resilient wall base and accessories installed with carpet.
3. Section 096813 "Tile Carpeting" for modular carpet tiles.

1.3 ACTION SUBMITTALS

A. Product Data: For each type of product.

1. Include manufacturer's written data on physical characteristics and durability.
2. Include manufacturer's written installation recommendations for each type of substrate.

B. Samples: For each of the following products and for each color and texture required. Label each Sample with manufacturer's name, material description, color, pattern, and designation indicated on Drawings and in schedules.

1. Carpet: 12-inch- square Sample.
2. Exposed Edge, Transition, and Other Accessory Stripping: 12-inch- long Samples.
3. Carpet Cushion: 6-inch- square Sample.
4. Carpet Seam: 6-inch Sample.
5. Mitered Carpet-Border Seam: 12-inch- square Sample. Show carpet pattern alignment.

C. Samples for Initial Selection: For each type of product.

1. Include Samples of exposed edge, transition, and other accessory stripping involving color or finish selection.

Copyright © 2025 by the American Institute of Architects. Warning: This AIA MasterSpec-based document is protected by U.S. Copyright Law and International Treaties. It was created by "Michael Shilale Architects, LLP" for "Renovation of Rockland Green Administrative Headquarters and Construction of an Immersive Theatre Experience". A valid, current MasterSpec license is required for editing and use of this document for any other project.(22360)

D. Samples for Verification: For each of the following products and for each color and texture required. Label each Sample with manufacturer's name, material description, color, pattern, and designation indicated on Drawings and in schedules.

1. Carpet: 12-inch- square Sample.
2. Exposed Edge, Transition, and Other Accessory Stripping: 12-inch- long Samples.
3. Carpet Cushion: 6-inch- square Sample.
4. Carpet Seam: 6-inch Sample.
5. Mitered Carpet-Border Seam: 12-inch- square Sample. Show carpet pattern alignment.

E. Product Schedule: For carpet [**and carpet cushion**]. Use same designations indicated on Drawings.

1.4 INFORMATIONAL SUBMITTALS

A. Qualification Data: For Installer.

B. Product Test Reports: For carpet [**and carpet cushion**], for tests performed by a qualified testing agency.

C. Sample Warranties: For special warranties.

1.5 CLOSEOUT SUBMITTALS

A. Maintenance Data: For carpet to include in maintenance manuals. Include the following:

1. Methods for maintaining carpet, including cleaning and stain-removal products and procedures and manufacturer's recommended maintenance schedule.
2. Precautions for cleaning materials and methods that could be detrimental to carpet [**and carpet cushion**].

1.6 MAINTENANCE MATERIAL SUBMITTALS

A. Furnish extra materials, from the same product run, that match products installed and that are packaged with protective covering for storage and identified with labels describing contents.

1. Carpet: Full-width rolls equal to [**5**] <**Insert number>** percent of amount installed for each type indicated, but not less than 10 sq. yd..

1.7 QUALITY ASSURANCE

A. Installer Qualifications: An experienced installer who is certified by the International Certified Floorcovering Installers Association at the [**Commercial II**] [**Master II**] <**Insert description>** certification level.

Copyright © 2025 by the American Institute of Architects. Warning: This AIA MasterSpec-based document is protected by U.S. Copyright Law and International Treaties. It was created by "Michael Shilale Architects, LLP" for "Renovation of Rockland Green Administrative Headquarters and Construction of an Immersive Theatre Experience". A valid, current MasterSpec license is required for editing and use of this document for any other project.(22360)

B. Mockups: Build mockups to verify selections made under Sample submittals, to demonstrate aesthetic effects, and to set quality standards for fabrication and installation.

1. Build mockups at locations and in sizes shown on Drawings.
2. Subject to compliance with requirements, approved mockups may become part of the completed Work if undisturbed at time of Substantial Completion.

1.8 DELIVERY, STORAGE, AND HANDLING

A. Comply with the Carpet and Rug Institute's CRI 104.

B. Deliver carpet in original mill protective covering with mill register numbers and tags attached.

1.9 FIELD CONDITIONS

A. Comply with the Carpet and Rug Institute's CRI 104 for temperature, humidity, and ventilation limitations.

B. Environmental Limitations: Do not deliver or install carpet [**and carpet cushion**] until spaces are enclosed and weathertight, wet-work in spaces is complete and dry, and ambient temperature and humidity conditions are maintained at levels planned for building occupants during the remainder of the construction period.

C. Do not install carpet [**and carpet cushion**] over concrete slabs until slabs have cured, are sufficiently dry to bond with adhesive, and have pH range recommended by carpet manufacturer.

D. Where demountable partitions or other items are indicated for installation on top of carpet, install carpet before installing these items.

1.10 WARRANTY

A. Special Warranty for Carpet: Manufacturer agrees to repair or replace components of carpet installation that fail in materials or workmanship within specified warranty period.

1. Warranty does not include deterioration or failure of carpet due to unusual traffic, failure of substrate, vandalism, or abuse.
2. Failures include, but are not limited to, the following:
   a. More than 10 percent loss of face fiber, edge raveling, snags, and runs.
   b. Loss of tuft bind strength.
   c. Excess static discharge.
   d. Delamination.
   e. <**Insert failure characteristic>**.
3. Warranty Period: [**10**] <**Insert number>** years from date of Substantial Completion.

Copyright © 2025 by the American Institute of Architects. Warning: This AIA MasterSpec-based document is protected by U.S. Copyright Law and International Treaties. It was created by "Michael Shilale Architects, LLP" for "Renovation of Rockland Green Administrative Headquarters and Construction of an Immersive Theatre Experience". A valid, current MasterSpec license is required for editing and use of this document for any other project.(22360)

PART 2 - PRODUCTS

2.1 WOVEN CARPET <**Insert designation>**

A. <Click here to find, evaluate, and insert list of manufacturers and products.>

B. Color: [**As indicated by manufacturer's designations**] [**Match Architect's samples**] [**As selected by Architect from manufacturer's full range**] <**Insert color>**.

C. Pattern: [**Match Architect's samples**] <**Insert pattern>**.

D. Fiber Content: [**100 percent wool**] [**80 percent wool; 20 percent nylon 6, 6**] [**80 percent wool; 20 percent nylon 6**] <**Insert fiber and content by percentage>**.

E. Face Construction: [**Axminster**] [**Wilton**] [**Velvet**] <**Insert construction>**.

F. Pile Characteristic: [**Level-loop**] [**Cut**] [**Cut-and-loop**] pile.

G. Yarn Twist: <**Insert twist in TPI>**.

H. Yarn Count: <**Insert yarn count>**.

I. Density: <**Insert oz./cu. yd.>**.

J. Pile Thickness: <**Insert inches>** for finished carpet [**according to ASTM D6859**].

K. Rows: <**Insert number of lengthwise tufts per inch>**.

L. Pitch: <**Insert number of rows in 27 inches>**.

M. Face Weight: <**Insert oz./sq. yd.>**.

N. Total Weight: <**Insert oz./sq. yd.>** for finished carpet.

O. Backing: Manufacturer's standard. [**As follows:**]

P. Applied Treatments:

1. Applied Soil-Resistance Treatment: [**Manufacturer's standard material**] <**Insert treatment>**.
2. Antimicrobial Treatment: [**Manufacturer's standard material**] <**Insert treatment>**.
   a. Antimicrobial Activity: Not less than 2-mm halo of inhibition for gram-positive bacteria, not less than 1-mm halo of inhibition for gram-negative bacteria, and no fungal growth, according to AATCC 174.

Q. Sustainable Design Requirements:

1. Sustainable Product Certification: [**Silver**] [**Gold**] [**Platinum**] level certification according to ANSI/NSF 140.
2. <Click to insert sustainable design text for carpet and cushion.>

Copyright © 2025 by the American Institute of Architects. Warning: This AIA MasterSpec-based document is protected by U.S. Copyright Law and International Treaties. It was created by "Michael Shilale Architects, LLP" for "Renovation of Rockland Green Administrative Headquarters and Construction of an Immersive Theatre Experience". A valid, current MasterSpec license is required for editing and use of this document for any other project.(22360)

R. Performance Characteristics:

1. Appearance Retention Rating: Heavy traffic, 3.0 minimum according to ASTM D7330.
2. Noise Reduction Coefficient (NRC): <**Insert NRC>** according to ASTM C423.

2.2 INSTALLATION ACCESSORIES

A. Trowelable Leveling and Patching Compounds: Latex-modified, hydraulic-cement-based formulation provided or recommended by [**carpet**] [**carpet cushion**] manufacturer.

B. Adhesives: Water-resistant, mildew-resistant, nonstaining type to suit products and subfloor conditions indicated, that complies with flammability requirements for installed carpet and is recommended or provided by [**carpet manufacturer**] [**carpet and carpet cushion manufacturers**].

C. Seam Adhesive: Hot-melt adhesive tape or similar product recommended by carpet manufacturer for sealing and taping seams and butting cut edges at backing to form secure seams and to prevent pile loss at seams.

D. Metal Edge/Transition Strips: Extruded aluminum with [**mill**] <**Insert finish>** finish of profile and width shown, of height required to protect exposed edge of carpet, and of maximum lengths to minimize running joints.

PART 3 - EXECUTION

3.1 EXAMINATION

A. Examine substrates, areas, and conditions, with Installer present, for compliance with requirements for maximum moisture content, alkalinity range, installation tolerances, and other conditions affecting carpet performance.

B. Examine carpet for type, color, pattern, and potential defects.

C. Wood Subfloors: Verify the following:

1. Underlayment over subfloor complies with requirements specified in Section 061600 "Sheathing."
2. Underlayment surface is free of irregularities and substances that may interfere with adhesive bond or show through surface.

D. Proceed with installation only after unsatisfactory conditions have been corrected.

3.2 PREPARATION

A. General: Comply with the Carpet and Rug Institute's CRI 104 and with carpet manufacturer's written installation instructions for preparing substrates.

Copyright © 2025 by the American Institute of Architects. Warning: This AIA MasterSpec-based document is protected by U.S. Copyright Law and International Treaties. It was created by "Michael Shilale Architects, LLP" for "Renovation of Rockland Green Administrative Headquarters and Construction of an Immersive Theatre Experience". A valid, current MasterSpec license is required for editing and use of this document for any other project.(22360)

B. Use trowelable leveling and patching compounds, according to manufacturer's written instructions, to fill cracks, holes, depressions, and protrusions in substrates. Fill or level cracks, holes and depressions 1/8 inch wide or wider, and protrusions more than 1/32 inch, unless more stringent requirements are required by manufacturer's written instructions.

C. Concrete Substrates: Remove coatings, including curing compounds, and other substances that are incompatible with adhesives and that contain soap, wax, oil, or silicone, without using solvents. Use mechanical methods recommended in writing by [**adhesive and carpet**] [**adhesive, carpet, and carpet cushion**] manufacturers.

D. Broom and vacuum clean substrates to be covered immediately before installing carpet.

3.3 INSTALLATION

A. Comply with the Carpet and Rug Institute's CRI 104 and [**carpet manufacturer's**] [**carpet and carpet cushion manufacturers'**] written installation instructions for the following:

1. Direct-glue-down installation.

B. Comply with carpet manufacturer's written instructions and Shop Drawings for seam locations and direction of carpet; maintain uniformity of carpet direction and lay of pile. At doorways, center seams under the door in closed position.

1. Stretch-in Carpet Installation: Install carpet cushion seams at 90-degree angle with carpet seams.

C. Install [**pattern parallel to walls and borders**] [**as indicated on Drawings**] <**Insert requirements**>.

D. Install borders with mitered corner seams.

E. Do not bridge building expansion joints with carpet.

F. Cut and fit carpet to butt tightly to vertical surfaces, permanent fixtures, and built-in furniture including cabinets, pipes, outlets, edgings, thresholds, and nosings. Bind or seal cut edges as recommended by carpet manufacturer.

G. Extend carpet into toe spaces, door reveals, closets, open-bottomed obstructions, removable flanges, alcoves, and similar openings.

H. Maintain reference markers, holes, and openings that are in place or marked for future cutting by repeating on carpet as marked on subfloor. Use nonpermanent, nonstaining marking device.

3.4 CLEANING AND PROTECTION

A. Perform the following operations immediately after installing carpet:

Copyright © 2025 by the American Institute of Architects. Warning: This AIA MasterSpec-based document is protected by U.S. Copyright Law and International Treaties. It was created by "Michael Shilale Architects, LLP" for "Renovation of Rockland Green Administrative Headquarters and Construction of an Immersive Theatre Experience". A valid, current MasterSpec license is required for editing and use of this document for any other project.(22360)

1. Remove excess adhesive, seam sealer, and other surface blemishes using cleaner recommended by carpet manufacturer.
2. Remove yarns that protrude from carpet surface.
3. Vacuum carpet using commercial machine with face-beater element.

B. Protect installed carpet to comply with the Carpet and Rug Institute's CRI 104.

C. Protect carpet against damage from construction operations and placement of equipment and fixtures during the remainder of construction period. Use protection methods recommended in writing by carpet manufacturer [**and carpet cushion manufacturer**] [**and carpet adhesive manufacturer**] [**and carpet cushion and adhesive manufacturers**].

END OF SECTION 096816

Copyright © 2025 by the American Institute of Architects. Warning: This AIA MasterSpec-based document is protected by U.S. Copyright Law and International Treaties. It was created by "Michael Shilale Architects, LLP" for "Renovation of Rockland Green Administrative Headquarters and Construction of an Immersive Theatre Experience". A valid, current MasterSpec license is required for editing and use of this document for any other project.(22360)

SECTION 098129 – SPRAYED ACOUSTICAL INSULATION

PART 1 – GENERAL

1.01 SUMMARY

A. Section Includes
   1. Sprayed cellulose thermal insulation. (07 21 29)
   2. Sprayed cellulose acoustical insulation. (09 83 16)

1.02 Related Items

A. Clips, hangers, supports, sleeves and other attachments to spray bases are to be placed by other trades prior to the application of sprayed insulation.
B. Ducts, piping, conduit or other suspended equipment shall not be positioned until after the application of sprayed insulation.
C. Roof penetrations to be installed prior to application.

1.03 Submittals

A. Submit product data that the product meets or exceeds the following specified requirements.
   1. Bond strength shall be greater than 150 psf per ASTM E 736.
   2. Product shall be Class 1 Class A per ASTM E 84/ UL 723.
   3. Non-corrosive per ASTM C 1149
   4. Bond Deflection per ASTM E 759: 6” Deflection in 10’ Span – No Spalling or Delamination.
   5. R-Value to be 3.70 per inch per ASTM C 518.
   6. Comply with 2015 IBC Section 803.12 stability requirements for interior finishes.
   7. Meet ASTM C 1149
   8. Product shall be Cradle to Cradle® Certified v.3.1 or higher to a minimum certification level of Bronze
   9. Product shall be UL GREENGUARD Gold Certified
   10. Product must have a publicly available Health Product Declaration (HPD) to 100 PPM
   11. Product must have a third-party verified, publicly available, product-specific Environmental Product Declaration per ISO 14025
   12. Manufacturer's written certification that product contains no asbestos, fiberglass or other man-made mineral fibers.
   13. Copy of manufacturer’s ISO 9001:2015 Certification.
   14. Minimum Fiber Recycled Content to be 80%.
   15. Cannot contain any added Urea-Formaldehyde Resins.

1.04 Quality Assurance

A. Manufacturer must have a current Underwriters Laboratories (UL) Code Evaluation Report.
B. Manufacturer must be in compliance with the 2009-2021 International Building Code.
C. Manufacturer must be ISO 9001:2015 Certified.
D. Manufacturer must be Forest Stewardship Council (FSC) Chain-of-Custody Certified.
E. Applicator: Licensed by manufacturer.
F. Manufacturer must subscribe to independent laboratory follow-up inspection services of Underwriters Laboratories and Factory Mutual. Each bag shall be labeled accordingly.

G. Mock-up: Apply a 100 square foot representative sample to be reviewed by the Architect and/or Owner prior to proceeding.
H. Manufacturer shall have a minimum 10-year successful performance history of producing and installing spray-applied cellulose on similar projects
I. Material must be tested in accordance with ASTM E 1042 by a NVLAP accredited testing laboratory.

1.05 Delivery, Storage and Handling
A. Deliver in original, unopened containers bearing name of manufacturer, product identification and reference to U.L. testing.
B. Store materials dry, off ground, and under cover.
C. Protect liquid adhesive from freezing.
D. Water to be potable.

PART 2 – PRODUCTS
2.01 Acceptable Manufacturers
A. International Cellulose Corporation
12315 Robin Boulevard
Houston, Texas 77045
Phone: (713) 433-6701 or (800) 444-1252
Fax: (713) 433-2029
Website: www.spray-on.com Email:
icc@spray-on.com
B. For approved applicators contact ICC at (800) 444-1252.

2.02 Materials
A. K-13 Spray-On-Systems.
1. Color shall be from Manufacturer's standard color chart or custom color as noted
2. Each bag must be labeled with appropriate UL classification and FM markings
3. Each drum of adhesive must be labeled "SK-2000 adhesive to be used with K-13"

PART 3 – EXECUTION
3.01 Examination
A. Examine surfaces and report unsatisfactory conditions in writing. Do not proceed until unsatisfactory conditions are corrected.
B. Verify surfaces to receive spray insulation to determine if priming/sealing is required to insure bonding and/or to prevent discoloration caused by migratory stains.

3.02 Preparation
A. Provide masking, drop cloths or other satisfactory coverings for materials/surfaces that are not to receive insulation to protect from over-spray.
B. Coordinate installation of the sprayed cellulose fiber with work of other trades.
C. Prime surfaces as required by manufacturer's instructions or as determined by examination.
D. Prime all gypsum board surfaces with high quality, commercial, gypsum board primer

3.03 Installation

A. Install spray applied insulation according to manufacturer's recommendations.
B. Comply with local Building Code requirements.
C. Install spray applied insulation to achieve an average R-Value of _____.
D. Install spray applied insulation to achieve an average NRC of _____.

K-13 Sprayed Thermal and Acoustical Insulation on Solid Backing:		
Thickness:	NRC:	R-Value:
1.00"	0.80	3.70
1.50"	0.90	5.60
1.75"	1.00	6.50
2.00"	1.00	7.40
3.00"	1.00	11.10
4.00"	1.05	14.80
5.00"	1.00	18.50
K-13 Sprayed Thermal and Acoustical Insulation on 1.50" Metal Deck:		
Thickness:	NRC:	R-Value:
1.50"	1.05	5.60
3.00"	1.05	11.10
K-13 Sprayed Thermal and Acoustical Insulation on 2" Metal Deck:		
Thickness:	NRC:	R-Value:
1.00"	0.90	3.70
2.00"	1.05	7.40
K-13 Sprayed Thermal and Acoustical Insulation on 3" Metal Deck:		
Thickness:	NRC:	R-Value:
1.00"	0.95	3.70
1.50"	1.00	5.60
2.75"	1.05	10.20

E. Cure insulation with continuous natural or mechanical ventilation.
   a. Continuous ventilation must be maintained until the material has properly cured.
F. Remove and dispose of over-spray.

4.01 Protection

A. Protect finished installation under provision of Division 1.

END OF SECTION

SECTION 098700 – POTASSIUM SILICATE COATING & STAIN

Part 1 – GENERAL

1.1 SUMMARY OF WORK

A. For coating masonry, stucco and plaster surfaces.

1.2 SUBMITTAL

A. Submit the following items in time to prevent delay of the work and to allow adequate time for review and resubmittals, if needed; do not order materials or start work before receiving the written approval:

Cathedral Stone Products, Inc.
7266 Park Circle Drive Hanover, MD 21076

Samples shall be submitted for color matching to the same address.

B. Samples of all specified materials and Safety Data Sheets (SDS) as appropriate.

C. Apply coating samples on the masonry to be coated. Do not apply samples to plywood or other non-masonry surfaces.

D. Written verification from the Contractor that all specified items will be used. Provide purchase orders, shipping tickets, receipts, etc. to prove that the specified materials were ordered and received.

1.3 QUALITY ASSURANCE/TEST REQUIREMENTS

A. Installer Qualifications: Company specializing in commercial painting and finishing with three years documented experience and approved by the coating manufacturer.

B. *Coating Samples:* Prepare a sample of each type of repair listed below. Prepare, install, and finish each sample according to the specifications. All samples must be applied to masonry. Prepare samples in an area where they will be exposed to the same conditions as will be present on the building during curing. Allow samples to cure at least three days (or longer, if possible) before obtaining Owner's approval for color match. Samples should be viewed from a minimum distance of 18-22 feet.

C. Mock-Up: Prepare a mock-up for the limestone coating. When creating a mock-up, the coated stone should be adjacent to an uncoated stone for comparison directly on the building natural light. Photos of this should be submitted in a single pdf with a description of the coating, manufacturer and color name.

D. oating, manufacturer and color name.

E. In addition to the A/E of Record approval, mock-ups are subject to review and approval

by the State Historic Preservation Office (SHPO). Notify the Authority's Representative 4 days prior to when the mock-up will be ready for inspection to allow notification to SHPO to permit them to inspect the mock-up. After review of the mock-up, a minimum of thirty calendar days will be required to provide an approval or rejection. At SHPO's option, without changes to the timing indicated above, digital photographs may be used in lieu of a site inspection. The AEOR will take photos of the mock-ups and will submit to the Authority's SHPO Liaison for submission to the state.

1.4 DELIVERY, STORAGE, AND HANDLING

A. Materials are to be delivered, stored, and handled to protect them from damage, extreme temperature, and moisture in accordance with Manufacturer's written instructions.

B. Deliver and store material in Manufacturer's original, unopened containers with the production date shown on the container or packaging.

C. Comply with the Manufacturer's written specifications and recommendations for mixing, application, and curing coatings.

1.5 PROTECTION/SITE CONDITIONS

A. Mock-ups: *Cold Weather Requirements:* Do not work in temperatures below 45° F, when the substrate is colder than 45° F, or when the temperature is expected to fall below 45° F for 48 hours after installation of the coating. Building an enclosure and heating areas to maintain this temperature may only be done with the written approval of the Specifier.

B. *Hot Weather Requirements:* Protect coating from direct sunlight and wind. Do not use or prepare coating when ambient air temperature is above 90° F.

C. *Foul weather requirements:* Do not work when precipitation is expected within 48 hours of installation. The coating needs adequate time to bond to the substrate. Moisture disrupts the curing process.

D. *Ambient Conditions/Dew point:* Do not install CSP Potassium Silicate Coatings when the temperature is expected to reach the dew point within 24 hours. The air temperature, relative humidity, dew point temperature and surface temperature of the substrate should be monitored to determine feasibility of application. For more information on calculating the dew point, resource Using Coatings Inspection Instruments by William D. Corbett © 2002 available at www.kta.com.

Part 2 – PRODUCTS

2.1 MANUFACTURERS

A. Basis-of-Design Product: The basis of design for these specifications is the CSP Potassium Silicate Coating & Stain by Cathedral Stone Products, Inc.

B. Equivalents: Subject to compliance with all material and performance requirements outlined in these specifications, "or equal" products by other manufacturers will be considered for use subject to review by the Architect. The Architect's decision regarding equivalency is final.

C. Manufacturers:

a. Cathedral Stone Products
b. Keim
c. Conproco
d. Edison Coatings, Inc.

2.2 COATING MANUFACTURER

A. Manufactured by Cathedral Stone® Products, Inc., 7266 Park Circle Drive, Hanover, MD 27016; tel. (410) 782-9150; fax. (410) 782-9155; website: www.cathedralstone.com email: info@cathedralstone.com. Cathedral Stone Coatings are distributed in a two-component system. Mix component A (colored paint) with component B (Cathedral Stone Fixative) in the desired proportions before installation.

B. *Substitutions:* If proposed equal is submitted, lab test to establish equivalent performance levels. Use an independent testing laboratory, as determined by the Specifier, and paid for by the submitting party.

Part 3 – EXECUTION

3.1 WORKMANSHIP

A. Do not use any additives in the coating system.

3.2 PREPARATION FOR REPAIRS

B. Do not start work until surfaces to be coated are in proper condition to produce finished surfaces of uniform, satisfactory appearance.

C. Mildew, algae and fungus should be removed by methods recommended by the coating manufacturer.

D. Remove dust and loose particulate matter from surfaces to receive coatings immediately prior to coating application.

E. Protect all non-masonry surfaces such as: glass, wood, metal, etc. (CSP Potassium Silicate Coatings will permanently bond to glass if allowed to dry.)

F. Cracks and spalls must be repaired and cured prior to coating application.

G. To ensure even penetration of the coating, make sure any masonry repairs have been made with repair materials that are compatible to the substrate.

H. Remove any previous or existing coatings before application of new mineral coating.

I. CSP Potassium Silicate Coating & Stain is designed for vertical surfaces only. Horizontal surfaces, especially where water can pool, are not suitable for application.

J. Note**: Substrate must be completely dry before coating. Do not work when precipitation is expected within 48 hours of installation. The coating needs adequate time to bond to the substrate. Moisture disrupts the curing process.

K. Note**. Verify ambient conditions are conducive to application of coating (see section 1.5 Protection/Site Conditions).

3.3 MIXING COATING SYSTEM

L. It is recommended that proper eye protection be worn during mixing in case of accidental splashing. Mix component A (colored paint) with component B (Cathedral Stone Fixative) in the desired proportions before installation.

3.4 APPLICATION OF CSP POTASSIUM SILICATE COATING

M. Apply each coat of CSP Coating by brush, roller or spray making sure to work the material into the pores of the masonry. The coating is designed to be absorbed into the masonry so it should not be applied in thick layers. Brush application increases the absorption of the coating into the masonry. This feature results in a longer lasting, more durable coating.

N. Maintain a wet edge! “Cutting in” is not recommended, as the colors of the paint vary if a wet edge is not maintained. Be sure to work wet into wet and corner-to-corner.

O. "Box-mix" paint. "Boxing" is pouring the contents of one paint can into a large bucket and then pouring the contents of another paint can into the same bucket. This way, the paint is blended even though you may buy different "batches". Boxing is especially recommended for mixed colors.

P. Allow manufacturer’s specified drying time, and ensure correct coating adhesion, for each coat before applying the next coat.

Q. Do not apply succeeding coat until Architect has approved previous coat; only Architect- approved coats will be considered in determining number of coats applied.

R. Where coating application abuts other materials or other coating color, terminate coating, making clean sharp termination line without coating overlap.

S. Where color changes occur between adjoining spaces, through framed openings that are of same color as adjoining surfaces, change color at outside stop corner nearest to face of closed door.

3.5 CLEAN UP

A. Place tools immediately in clean water when pausing work (15-30 minutes or more).

Clean tools with clean water immediately after finishing work. Dried CSP Potassium Silicate Coatings are insoluble in water. CSP Coatings can be removed from non-porous surfaces with clean water while still wet.

END OF SECTION 098700

SECTION 099123 - INTERIOR PAINTING

PART 1 - GENERAL

1.1 RELATED DOCUMENTS

A. Drawings and general provisions of the Contract, including General and Supplementary Conditions and Division 01 Specification Sections, apply to this Section.

1.2 SUMMARY

A. Section Includes:

1. Primers.
2. Water-based finish coatings.
3. Solvent-based finish coatings.

B. Related Requirements:

1. Section 099300 "Staining and Transparent Finishing" for surface preparation and the application of wood stains and transparent finishes on interior wood substrates.

1.3 ACTION SUBMITTALS

A. Product Data: For each type of product. Include preparation requirements and application instructions.

1. Include preparation requirements and application instructions.
2. Indicate VOC content.

B. Samples for Initial Selection: For each type of topcoat product.

1.4 MAINTENANCE MATERIAL SUBMITTALS

A. Furnish extra materials that match products installed and that are packaged with protective covering for storage and identified with labels describing contents.

1. Paint Products: 5 percent, but not less than 1 gal. of each material and color applied.

1.5 QUALITY ASSURANCE

A. Mockups: Apply mockups of each paint system indicated and each color and finish selected to verify preliminary selections made under Sample submittals and to demonstrate aesthetic effects and set quality standards for materials and execution.

Copyright © 2025 by the American Institute of Architects. Warning: This AIA MasterSpec-based document is protected by U.S. Copyright Law and International Treaties. It was created by "Michael Shilale Architects, LLP" for "Renovation of Rockland Green Administrative Headquarters and Construction of an Immersive Theatre Experience". A valid, current MasterSpec license is required for editing and use of this document for any other project.(22360)

1. Architect will select one surface to represent surfaces and conditions for application of each paint system.
   a. Vertical and Horizontal Surfaces: Provide samples of at least 100 sq. ft..
   b. Other Items: Architect will designate items or areas required.
2. Final approval of color selections will be based on mockups.
   a. If preliminary color selections are not approved, apply additional mockups of additional colors selected by Architect at no added cost to Owner.
3. Approval of mockups does not constitute approval of deviations from the Contract Documents contained in mockups unless Architect specifically approves such deviations in writing.
4. Subject to compliance with requirements, approved mockups may become part of the completed Work if undisturbed at time of Substantial Completion.

1.6 DELIVERY, STORAGE, AND HANDLING

A. Store materials not in use in tightly covered containers in well-ventilated areas with ambient temperatures continuously maintained at not less than 45 deg F.

1. Maintain containers in clean condition, free of foreign materials and residue.
2. Remove rags and waste from storage areas daily.

1.7 FIELD CONDITIONS

A. Apply paints only when temperature of surfaces to be painted and ambient air temperatures are between 50 and 95 deg F.

B. Do not apply paints when relative humidity exceeds 85 percent; at temperatures of less than 5 deg F above the dew point; or to damp or wet surfaces.

PART 2 - PRODUCTS

2.1 MANUFACTURERS

A. Source Limitations: Obtain each paint product from single source from single manufacturer.

2.2 PAINT PRODUCTS, GENERAL

A. Material Compatibility:

1. Materials for use within each paint system shall be compatible with one another and substrates indicated, under conditions of service and application as demonstrated by manufacturer, based on testing and field experience.
2. For each coat in a paint system, products shall be recommended in writing by topcoat manufacturers for use in paint system and on substrate indicated.

Copyright © 2025 by the American Institute of Architects. Warning: This AIA MasterSpec-based document is protected by U.S. Copyright Law and International Treaties. It was created by "Michael Shilale Architects, LLP" for "Renovation of Rockland Green Administrative Headquarters and Construction of an Immersive Theatre Experience". A valid, current MasterSpec license is required for editing and use of this document for any other project.(22360)

B. Colors: As selected by Architect from manufacturer's full range .

1. Ten percent of surface area will be painted with deep tones.

2.3 PRIMERS

A. Interior/Exterior Latex Block Filler: Water-based, high-solids, emulsion coating formulated to bridge and fill porous surfaces of exterior concrete masonry units in preparation for specified subsequent coatings.

B. Interior Latex Primer Sealer: Water-based latex sealer used on new interior plaster, concrete, and gypsum wallboard surfaces.

C. Interior Alkyd Primer Sealer: Solvent-based, alkyd-type, primer/sealer for new interior wood, plaster, and porous surfaces,

2.4 WATER-BASED FINISH COATS

A. Interior, Latex, Flat: Pigmented, water-based paint for use on primed/sealed interior plaster and gypsum board, and on primed wood and metals.

1. Gloss and Sheen Level: Maximum gloss of five units at 60 degrees and maximum sheen of 10 units at 85 degrees when tested in accordance with ASTM D523 .

B. Interior, Latex, Low Sheen: Pigmented, water-based paint for use on primed/sealed interior plaster and gypsum board, and on primed wood and metals.

1. Gloss and Sheen Level: Maximum gloss of 10 units at 60 degrees and sheen of 10 to 35 units at 85 degrees when tested in accordance with ASTM D523 .

C. Interior, Latex, Eggshell: Pigmented, water-based paint for use on primed/sealed interior plaster and gypsum board, and on primed wood and metals.

1. Gloss and Sheen Level: Gloss of 10 to 25 units at 60 degrees and sheen of 10 to 35 units at 85 degrees when tested in accordance with ASTM D523 .

D. Interior, Latex, Satin: Pigmented, water-based paint for use on primed/sealed interior plaster and gypsum board, and on primed wood and metals.

1. Gloss and Sheen Level: Gloss of 20 to 35 units at 60 degrees and minimum sheen of 35 units at 85 degrees when tested in accordance with ASTM D523 .

E. Interior, Latex, Semigloss: Pigmented, water-based paint for use on primed/sealed interior plaster and gypsum board, and on primed wood and metals.

1. Gloss Level: Gloss of 35 to 70 units at 60 degrees when tested in accordance with ASTM D523 .

Copyright © 2025 by the American Institute of Architects. Warning: This AIA MasterSpec-based document is protected by U.S. Copyright Law and International Treaties. It was created by "Michael Shilale Architects, LLP" for "Renovation of Rockland Green Administrative Headquarters and Construction of an Immersive Theatre Experience". A valid, current MasterSpec license is required for editing and use of this document for any other project.(22360)

F. Interior, Latex, Gloss: Pigmented, water-based paint for use on primed/sealed interior plaster and gypsum board, and on primed wood and metals.

1. Gloss Level: Gloss of 70 to 85 units at 60 degrees when tested in accordance with ASTM D523 .

2.5 SOLVENT-BASED FINISH COATS

A. Interior, Alkyd, Eggshell: Pigmented, solvent-based alkyd paint for use on primed/sealed interior plaster, gypsum, wood, and metal walls primarily in residential and moderate traffic commercial environments.

1. Gloss and Sheen Level: Gloss of 10 to 25 units at 60 degrees and sheen of 10 to 35 units at 85 degrees when tested in accordance with ASTM D523 .

B. Interior, Alkyd, Semigloss: Pigmented, solvent-based alkyd paint for use on primed/sealed interior plaster, gypsum, wood, and metal walls primarily in residential and moderate traffic commercial environments.

1. Gloss Level: Gloss of 35 to 70 units at 60 degrees when tested in accordance with ASTM D523 .

C. Interior, Alkyd, Gloss: Pigmented, solvent-based alkyd paint for use on primed/sealed interior plaster, gypsum, wood, and metal walls primarily in residential and moderate traffic commercial environments.

1. Gloss Level: Gloss of 70 to 85 units at 60 degrees when tested in accordance with ASTM D523 .

PART 3 - EXECUTION

3.1 EXAMINATION

A. Examine substrates and conditions, with Applicator present, for compliance with requirements for maximum moisture content and other conditions affecting performance of the Work.

B. Maximum Moisture Content of Substrates: When measured with an electronic moisture meter as follows:

1. Concrete: 12 percent.
2. Fiber-Cement Board: 12 percent.
3. Masonry (Clay and CMUs): 12 percent.
4. Wood: 15 percent.
5. Gypsum Board: 12 percent.
6. Plaster: 12 percent.

C. Gypsum Board Substrates: Verify that finishing compound is sanded smooth.

Copyright © 2025 by the American Institute of Architects. Warning: This AIA MasterSpec-based document is protected by U.S. Copyright Law and International Treaties. It was created by "Michael Shilale Architects, LLP" for "Renovation of Rockland Green Administrative Headquarters and Construction of an Immersive Theatre Experience". A valid, current MasterSpec license is required for editing and use of this document for any other project.(22360)

D. Plaster Substrates: Verify that plaster is fully cured.

E. Spray-Textured Ceiling Substrates: Verify that surfaces are dry.

F. Verify suitability of substrates, including surface conditions and compatibility, with existing finishes and primers.

G. Proceed with coating application only after unsatisfactory conditions have been corrected.

1. Application of coating indicates acceptance of surfaces and conditions.

3.2 PREPARATION

A. Comply with manufacturer's written instructions and recommendations applicable to substrates and paint systems indicated.

B. Remove hardware, covers, plates, and similar items already in place that are removable and are not to be painted. If removal is impractical or impossible because of size or weight of item, provide surface-applied protection before surface preparation and painting.

1. After completing painting operations, use workers skilled in the trades involved to reinstall items that were removed. Remove surface-applied protection if any.

C. Clean substrates of substances that could impair bond of paints, including dust, dirt, oil, grease, and incompatible paints and encapsulants.

1. Remove incompatible primers and reprime substrate with compatible primers or apply tie coat as required to produce paint systems indicated.

D. Concrete Substrates: Remove release agents, curing compounds, efflorescence, and chalk. Do not paint surfaces if moisture content or alkalinity of surfaces to be painted exceeds that permitted in manufacturer's written instructions.

E. Masonry Substrates: Remove efflorescence and chalk. Do not paint surfaces if moisture content or alkalinity of surfaces or mortar joints exceeds that permitted in manufacturer's written instructions.

F. Steel Substrates: Remove rust, loose mill scale, and shop primer, if any. Clean using methods recommended in writing by paint manufacturer but not less than the following:

1. SSPC-SP 2.
2. SSPC-SP 7/NACE No. 4.

G. Shop-Primed Steel Substrates: Clean field welds, bolted connections, and areas where shop paint is abraded. Paint exposed areas with the same material as used for shop priming to comply with SSPC-PA 1 for touching up shop-primed surfaces.

Copyright © 2025 by the American Institute of Architects. Warning: This AIA MasterSpec-based document is protected by U.S. Copyright Law and International Treaties. It was created by "Michael Shilale Architects, LLP" for "Renovation of Rockland Green Administrative Headquarters and Construction of an Immersive Theatre Experience". A valid, current MasterSpec license is required for editing and use of this document for any other project.(22360)

H. Galvanized-Metal Substrates: Remove grease and oil residue from galvanized sheet metal by mechanical methods to produce clean, lightly etched surfaces that promote adhesion of subsequently applied paints.

I. Aluminum Substrates: Remove loose surface oxidation.

J. Wood Substrates:

1. Scrape and clean knots, and apply coat of knot sealer before applying primer.
2. Sand surfaces that will be exposed to view, and dust off.
3. Prime edges, ends, faces, undersides, and backsides of wood.
4. After priming, fill holes and imperfections in the finish surfaces with putty or plastic wood filler. Sand smooth when dried.

K. Cotton or Canvas Insulation Covering Substrates: Remove dust, dirt, and other foreign material that might impair bond of paints to substrates.

3.3 INSTALLATION

A. Apply paints according to manufacturer's written instructions.

1. Use applicators and techniques suited for paint and substrate indicated.
2. Paint surfaces behind movable equipment and furniture same as similar exposed surfaces. Before final installation, paint surfaces behind permanently fixed equipment or furniture with prime coat only.
3. Paint front and backsides of access panels, removable or hinged covers, and similar hinged items to match exposed surfaces.
4. Do not paint over labels of independent testing agencies or equipment name, identification, performance rating, or nomenclature plates.
5. Primers specified in painting schedules may be omitted on items that are factory primed or factory finished if acceptable to topcoat manufacturers.

B. Tint each undercoat a lighter shade to facilitate identification of each coat if multiple coats of same material are to be applied. Tint undercoats to match color of topcoat, but provide sufficient difference in shade of undercoats to distinguish each separate coat.

C. If undercoats or other conditions show through topcoat, apply additional coats until cured film has a uniform paint finish, color, and appearance.

D. Apply paints to produce surface films without cloudiness, spotting, holidays, laps, brush marks, roller tracking, runs, sags, ropiness, or other surface imperfections. Cut in sharp lines and color breaks.

E. Painting Fire-Suppression, Plumbing, HVAC, Electrical, Communication, and Electronic Safety and Security Work:

1. Paint the following work where exposed in equipment rooms:
   a. Uninsulated metal piping.
   b. Uninsulated plastic piping.

Copyright © 2025 by the American Institute of Architects. Warning: This AIA MasterSpec-based document is protected by U.S. Copyright Law and International Treaties. It was created by "Michael Shilale Architects, LLP" for "Renovation of Rockland Green Administrative Headquarters and Construction of an Immersive Theatre Experience". A valid, current MasterSpec license is required for editing and use of this document for any other project.(22360)

c. Pipe hangers and supports.
d. Metal conduit.
e. Plastic conduit.
f. Duct, equipment, and pipe insulation having cotton or canvas insulation covering or other paintable jacket material.

2. Paint the following work where exposed in occupied spaces:
   a. Uninsulated metal piping.
   b. Uninsulated plastic piping.
   c. Pipe hangers and supports.
   d. Metal conduit.
   e. Plastic conduit.
   f. Duct, equipment, and pipe insulation having cotton or canvas insulation covering or other paintable jacket material.
   g. Other items as directed by Architect.
3. Paint portions of internal surfaces of metal ducts, without liner, behind air inlets and outlets that are visible from occupied spaces.

3.4 FIELD QUALITY CONTROL

A. Dry-Film Thickness Testing: Owner may engage the services of a qualified testing and inspecting agency to inspect and test paint for dry-film thickness.

1. Contractor shall touch up and restore painted surfaces damaged by testing.
2. If test results show that dry-film thickness of applied paint does not comply with paint manufacturer's written recommendations, Contractor shall pay for testing and apply additional coats as needed to provide dry-film thickness that complies with paint manufacturer's written recommendations.

3.5 CLEANING AND PROTECTION

A. At end of each workday, remove rubbish, empty cans, rags, and other discarded materials from Project site.

1. Do not clean equipment with free-draining water and prevent solvents, thinners, cleaners, and other contaminants from entering into waterways, sanitary and storm drain systems, and ground.
2. Dispose of contaminants in accordance with requirements of authorities having jurisdiction.
3. Allow empty paint cans to dry before disposal.
4. Collect waste paint by type and deliver to recycling or collection facility.

B. After completing paint application, clean spattered surfaces. Remove spattered paints by washing, scraping, or other methods. Do not scratch or damage adjacent finished surfaces.

C. Protect work of other trades against damage from paint application. Correct damage to work of other trades by cleaning, repairing, replacing, and refinishing, as approved by Architect, and leave in an undamaged condition.

Copyright © 2025 by the American Institute of Architects. Warning: This AIA MasterSpec-based document is protected by U.S. Copyright Law and International Treaties. It was created by "Michael Shilale Architects, LLP" for "Renovation of Rockland Green Administrative Headquarters and Construction of an Immersive Theatre Experience". A valid, current MasterSpec license is required for editing and use of this document for any other project.(22360)

D. At completion of construction activities of other trades, touch up and restore damaged or defaced painted surfaces.

3.6 INTERIOR PAINTING SCHEDULE

A. CMU Substrates:

1. High-Performance Architectural Latex System :
   a. Block Filler: Interior/exterior latex block filler.
   b. Prime Coat: Alkali-resistant, water-based primer.
   c. Intermediate Coat: Matching topcoat.
   d. Topcoat: Interior, latex, high-performance architectural coating, .

B. Steel Substrates:

1. Alkyd System :
   a. Prime Coat: .
   b. Intermediate Coat: Matching topcoat.
   c. Topcoat: Interior, alkyd, eggshell semigloss gloss.
2. Alkyd over Surface-Tolerant Primer System :
   a. Prime Coat: Surface-tolerant metal primer.
   b. Intermediate Coat: Matching topcoat.
   c. Topcoat: Interior, alkyd, eggshell semigloss gloss.

C. Galvanized-Metal Substrates:

1. Alkyd over Cementitious Primer System :
   a. Prime Coat: Cementitious galvanized primer.
   b. Intermediate Coat: Matching topcoat.
   c. Topcoat: Interior, alkyd, eggshell semigloss gloss.

D. Aluminum (Not Anodized or Otherwise Coated) Substrates:

1. Alkyd System :
   a. Prime Coat: Primer, .
   b. Intermediate Coat: Matching topcoat.
   c. Topcoat: Interior, alkyd, eggshell semigloss .

E. Gypsum Board and Plaster Substrates:

1. Latex over Latex Sealer System :
   a. Prime Coat: Interior latex primer sealer.
   b. Intermediate Coat: Matching topcoat.
   c. Topcoat: Interior, latex, flat low sheen eggshell satin semigloss gloss.

F. Insulation-Covering Substrates: Including .

END OF SECTION 099123

Copyright © 2025 by the American Institute of Architects. Warning: This AIA MasterSpec-based document is protected by U.S. Copyright Law and International Treaties. It was created by "Michael Shilale Architects, LLP" for "Renovation of Rockland Green Administrative Headquarters and Construction of an Immersive Theatre Experience". A valid, current MasterSpec license is required for editing and use of this document for any other project.(22360)

SECTION 101423.16 - ROOM-IDENTIFICATION PANEL SIGNAGE

PART 1 - GENERAL

1.1 RELATED DOCUMENTS

A. Drawings and general provisions of the Contract, including General and Supplementary Conditions and Division 01 Specification Sections, apply to this Section.

1.2 SUMMARY

A. Section includes room-identification signs that are directly attached to the building.

B. Related Requirements:

1. Section 101300 "Directories" for building directories.
2. Section 101416 "Plaques" for one-piece, solid metal signs, with or without frames, that are used for high-end room-identification.

1.3 ALLOWANCES

A. Allowances for room-identification signs are specified in Section 012100 "Allowances."

1.4 UNIT PRICES

A. Work of this Section is affected by unit prices specified in Section 012200 "Unit Prices."

1.5 DEFINITIONS

A. Accessible: In accordance with the accessibility standard.

1.6 COORDINATION

A. Furnish templates for placement of sign-anchorage devices embedded in permanent construction by other installers.

1.7 ACTION SUBMITTALS

A. Product Data: For each type of product.

B. Shop Drawings: For room-identification signs.

Copyright © 2025 by the American Institute of Architects. Warning: This AIA MasterSpec-based document is protected by U.S. Copyright Law and International Treaties. It was created by "Michael Shilale Architects, LLP" for "Renovation of Rockland Green Administrative Headquarters and Construction of an Immersive Theatre Experience". A valid, current MasterSpec license is required for editing and use of this document for any other project.(22360)

1. Include fabrication and installation details and attachments to other work.
2. Show sign mounting heights, locations of supplementary supports to be provided by other installers, and accessories.

C. Samples for Initial Selection: For each type of sign assembly, exposed component, and exposed finish.

1. Include representative Samples of available typestyles and graphic symbols.

D. Samples for Verification: For each type of sign assembly showing all components and with the required finish(es), in manufacturer's standard size unless otherwise indicated and as follows:

1. Room-Identification Signs: Full-size Sample .
2. Full-size Samples, if approved, will be returned to Contractor for use in Project.

E. Product Schedule: For room-identification signs. Use same designations indicated on Drawings or specified.

1.8 INFORMATIONAL SUBMITTALS

A. Sample Warranty: For special warranty.

1.9 CLOSEOUT SUBMITTALS

1.10 MAINTENANCE MATERIAL SUBMITTALS

1.11 QUALITY ASSURANCE

A. Installer Qualifications: Manufacturer of products .

1.12 FIELD CONDITIONS

A. Field Measurements: Verify locations of anchorage devices embedded in permanent construction by other installers by field measurements before fabrication, and indicate measurements on Shop Drawings.

1.13 WARRANTY

A. Special Warranty: Manufacturer agrees to repair or replace components of signs that fail in materials or workmanship within specified warranty period.

1. Failures include, but are not limited to, the following:
   a. Deterioration of finishes beyond normal weathering.
   b. Deterioration of embedded graphic image.
   c. Separation or delamination of sheet materials and components.

Copyright © 2025 by the American Institute of Architects. Warning: This AIA MasterSpec-based document is protected by U.S. Copyright Law and International Treaties. It was created by "Michael Shilale Architects, LLP" for "Renovation of Rockland Green Administrative Headquarters and Construction of an Immersive Theatre Experience". A valid, current MasterSpec license is required for editing and use of this document for any other project.(22360)

2. Warranty Period: Five years from date of Substantial Completion.

PART 2 - PRODUCTS

2.1 PERFORMANCE REQUIREMENTS

A. Accessibility Standard: Comply with applicable provisions in the USDOJ's "2010 ADA Standards for Accessible Design" and ICC A117.1 .

2.2 ROOM-IDENTIFICATION SIGNS

A. Room-Identification Sign : Sign Sign system with smooth, uniform surfaces; with message and characters having uniform faces, sharp corners, and precisely formed lines and profiles; and as follows:

1. Manufacturers: Subject to compliance with requirements, provide products by one of the following:
   a. Advance Corporation.
   b. Mohawk Sign Systems.
   c. Signature Signs, Inc.
2. Laminated-Sheet Sign: Photopolymer Sandblasted polymer face sheet with raised graphics laminated over subsurface graphics to acrylic backing sheet to produce composite sheet.
   a. Composite-Sheet Thickness: As indicated on Drawings .
   b. Surface-Applied Graphics: Applied vinyl film .
   c. Color(s): As selected by Architect from manufacturer's full range .
3. Sign-Panel Perimeter: Finish edges smooth.
   a. Edge Condition at Horizontal Edges : Square cut .
   b. Corner Condition in Elevation: Square .
4. Mounting: Manufacturer's standard method for substrates indicated with adhesive .

2.3 SIGN MATERIALS

A. Aluminum Sheet and Plate: ASTM B 209, alloy and temper recommended by aluminum producer and finisher for type of use and finish indicated.

B. Aluminum Extrusions: ASTM B 221, alloy and temper recommended by aluminum producer and finisher for type of use and finish indicated.

C. Acrylic Sheet: ASTM D 4802, category as standard with manufacturer for each sign, Type UVF (UV filtering).

D. Vinyl Film: UV-resistant vinyl film with pressure-sensitive, permanent adhesive; die cut to form characters or images as indicated on Drawings.

Copyright © 2025 by the American Institute of Architects. Warning: This AIA MasterSpec-based document is protected by U.S. Copyright Law and International Treaties. It was created by "Michael Shilale Architects, LLP" for "Renovation of Rockland Green Administrative Headquarters and Construction of an Immersive Theatre Experience". A valid, current MasterSpec license is required for editing and use of this document for any other project.(22360)

E. Paints and Coatings for Sheet Materials: Inks, dyes, and paints that are recommended by manufacturer for optimum adherence to surface and are UV and water resistant for colors and exposure indicated.

2.4 ACCESSORIES

A. Adhesive: As recommended by sign manufacturer.

2.5 FABRICATION

A. General: Provide manufacturer's standard sign assemblies according to requirements indicated.

1. Preassemble signs and assemblies in the shop to greatest extent possible. Disassemble signs and assemblies only as necessary for shipping and handling limitations. Clearly mark units for reassembly and installation; apply markings in locations concealed from view after final assembly.
2. Mill joints to a tight, hairline fit. Form assemblies and joints exposed to weather to resist water penetration and retention.
3. Conceal connections if possible; otherwise, locate connections where they are inconspicuous.
4. Provide rabbets, lugs, and tabs necessary to assemble components and to attach to existing work. Drill and tap for required fasteners. Use concealed fasteners where possible; use exposed fasteners that match sign finish.

2.6 GENERAL FINISH REQUIREMENTS

A. Protect mechanical finishes on exposed surfaces from damage by applying a strippable, temporary protective covering before shipping.

B. Appearance of Finished Work: Noticeable variations in same piece are not acceptable. Variations in appearance of adjoining components are acceptable if they are within the range of approved Samples and are assembled or installed to minimize contrast.

2.7 ALUMINUM FINISHES

A. Clear Anodic Finish: AAMA 611, Class I, 0.018 mm or thicker.

PART 3 - EXECUTION

3.1 INSTALLATION

A. General: Install signs using mounting methods indicated and according to manufacturer's written instructions.

Copyright © 2025 by the American Institute of Architects. Warning: This AIA MasterSpec-based document is protected by U.S. Copyright Law and International Treaties. It was created by "Michael Shilale Architects, LLP" for "Renovation of Rockland Green Administrative Headquarters and Construction of an Immersive Theatre Experience". A valid, current MasterSpec license is required for editing and use of this document for any other project.(22360)

1. Install signs level, plumb, true to line, and at locations and heights indicated, with sign surfaces free of distortion and other defects in appearance.
2. Install signs so they do not protrude or obstruct according to the accessibility standard.
3. Before installation, verify that sign surfaces are clean and free of materials or debris that would impair installation.

B. Accessibility: Install signs in locations on walls and according to the accessibility standard .

C. Mounting Methods:

1. Concealed Studs: Using a template, drill holes in substrate aligning with studs on back of sign. Remove loose debris from hole and substrate surface.
   a. Masonry Substrates: Fill holes with adhesive. Leave recess space in hole for displaced adhesive. Place sign in position and push until flush to surface, embedding studs in holes. Temporarily support sign in position until adhesive fully sets.
   b. Thin or Hollow Surfaces: Place sign in position and flush to surface, install washers and nuts on studs projecting through opposite side of surface, and tighten.
2. Through Fasteners: Drill holes in substrate using predrilled holes in sign as template. Countersink holes in sign if required. Place sign in position and flush to surface. Install through fasteners and tighten.
3. Adhesive: Clean bond-breaking materials from substrate surface and remove loose debris. Apply linear beads or spots of adhesive symmetrically to back of sign and of suitable quantity to support weight of sign after cure without slippage. Keep adhesive away from edges to prevent adhesive extrusion as sign is applied and to prevent visibility of cured adhesive at sign edges. Place sign in position, and push to engage adhesive. Temporarily support sign in position until adhesive fully sets.
4. Two-Face Tape: Clean bond-breaking materials from substrate surface and remove loose debris. Apply tape strips symmetrically to back of sign and of suitable quantity to support weight of sign without slippage. Keep strips away from edges to prevent visibility at sign edges. Place sign in position, and push to engage tape adhesive.
5. Hook-and-Loop Tape: Clean bond-breaking materials from substrate surface and remove loose debris. Apply sign component of two-part tape strips symmetrically to back of sign and of suitable quantity to support weight of sign without slippage; push to engage tape adhesive. Keep tape strips 0.250 inch away from edges to prevent visibility at sign edges when sign is initially installed or reinstalled. Apply substrate component of tape to substrate in locations aligning with tape on back of sign; push and rub well to fully engage tape adhesive to substrate.
6. Magnetic Tape: Clean bond-breaking materials from substrate surface and remove loose debris. Apply tape strips symmetrically to back of sign and of suitable quantity to support weight of sign without slippage. Keep strips away from edges to prevent visibility at sign edges. Place sign in position.

3.2 ADJUSTING AND CLEANING

A. Remove and replace damaged or deformed signs and signs that do not comply with specified requirements. Replace signs with damaged or deteriorated finishes or components that cannot be successfully repaired by finish touchup or similar minor repair procedures.

Copyright © 2025 by the American Institute of Architects. Warning: This AIA MasterSpec-based document is protected by U.S. Copyright Law and International Treaties. It was created by "Michael Shilale Architects, LLP" for "Renovation of Rockland Green Administrative Headquarters and Construction of an Immersive Theatre Experience". A valid, current MasterSpec license is required for editing and use of this document for any other project.(22360)

B. Remove temporary protective coverings and strippable films as signs are installed.

C. On completion of installation, clean exposed surfaces of signs according to manufacturer's written instructions, and touch up minor nicks and abrasions in finish. Maintain signs in a clean condition during construction and protect from damage until acceptance by Owner.

END OF SECTION 101423.16

Copyright © 2025 by the American Institute of Architects. Warning: This AIA MasterSpec-based document is protected by U.S. Copyright Law and International Treaties. It was created by "Michael Shilale Architects, LLP" for "Renovation of Rockland Green Administrative Headquarters and Construction of an Immersive Theatre Experience". A valid, current MasterSpec license is required for editing and use of this document for any other project.(22360)

SECTION 102800 - TOILET, BATH, AND LAUNDRY ACCESSORIES

PART 1 - GENERAL

1.1 SUMMARY

A. Section Includes:

1. Public-use washroom accessories.
2. Toilet-compartment occupancy-indicator system.
3. Hand dryers.
4. Underlavatory guards.
5. Custodial accessories.

B. Related Requirements:

1. Section 088300 "Mirrors" for frameless mirrors.

1.2 COORDINATION

A. Coordinate accessory locations with other work to prevent interference with clearances required for access by people with disabilities, and for proper installation, adjustment, operation, cleaning, and servicing of accessories.

B. Deliver inserts and anchoring devices set into concrete or masonry as required to prevent delaying the Work.

1.3 ACTION SUBMITTALS

A. Product Data:

1. Public-use washroom accessories.
2. Toilet-compartment occupancy-indicator system.
3. Hand dryers.
4. Underlavatory guards.
5. Custodial accessories.

B. Product Data Submittals: For each product.

1. Include construction details, material descriptions, dimensions of individual components and profiles, and finishes.
2. Include anchoring and mounting requirements, including requirements for cutouts in other work and substrate preparation.
3. Include electrical characteristics.

C. Samples: For each exposed product and for each finish specified, full size.

Copyright © 2025 by the American Institute of Architects. Warning: This AIA MasterSpec-based document is protected by U.S. Copyright Law and International Treaties. It was created by "Michael Shilale Architects, LLP" for "Renovation of Rockland Green Administrative Headquarters and Construction of an Immersive Theatre Experience". A valid, current MasterSpec license is required for editing and use of this document for any other project.(22360)

1. Approved full-size Samples will be returned and may be used in the Work.

1.4 INFORMATIONAL SUBMITTALS

A. Sample Warranty: For manufacturer's special warranties.

1.5 CLOSEOUT SUBMITTALS

A. Maintenance Data: For accessories to include in maintenance manuals.

1.6 WARRANTY

A. Manufacturer's Special Warranty for Mirrors: Manufacturer agrees to repair or replace mirrors that fail in materials or workmanship within specified warranty period.

1. Failures include, but are not limited to, visible silver spoilage defects.
2. Warranty Period: 10 years from date of Substantial Completion.

B. Manufacturer's Special Warranty for Toilet-Compartment Occupancy-Indicator Systems: Manufacturer agrees to repair or replace toilet-compartment occupancy-indicator systems that fail in materials or workmanship within specified warranty period.

1. Warranty Period: Five years from date of Substantial Completion.

C. Manufacturer's Special Warranty for Hand Dryers: Manufacturer agrees to repair or replace hand dryers that fail in materials or workmanship within specified warranty period.

1. Warranty Period: Two years from date of Substantial Completion.

PART 2 - PRODUCTS

2.1 OWNER-FURNISHED MATERIALS

2.2 PERFORMANCE REQUIREMENTS

A. Electrical Components, Devices, and Accessories: Listed and labeled as defined in NFPA 70, by a qualified testing agency, and marked for intended location and application.

2.3 PUBLIC-USE WASHROOM ACCESSORIES

A. Source Limitations: Obtain each type of public-use washroom accessory from single source from single manufacturer.

B. Combination Toilet Tissue Dispenser :

Copyright © 2025 by the American Institute of Architects. Warning: This AIA MasterSpec-based document is protected by U.S. Copyright Law and International Treaties. It was created by "Michael Shilale Architects, LLP" for "Renovation of Rockland Green Administrative Headquarters and Construction of an Immersive Theatre Experience". A valid, current MasterSpec license is required for editing and use of this document for any other project.(22360)

1. Mounting: Surface mounted Partition mounted, dual access with two tissue rolls per compartment and with one side that mounts flush with partition of accessible compartment.
2. Toilet Tissue Dispenser Capacity: 4-1/2- or 5-inch- diameter tissue rolls.
3. Toilet Tissue Dispenser Operation: Noncontrol delivery with theft-resistant spindles .
4. Material and Finish: Stainless steel, ASTM A480/A480M No. 4 finish (satin) .
5. Lockset: Tumbler type.

C. Automatic Soap Dispenser :

1. Description: Automatic dispenser with infrared sensor to detect presence of hands; electrically operated, with adapter for 110- to 240-V ac power supply ; designed for dispensing soap in liquid or lotion form.
2. Mounting: Surface mounted.

D. Grab Bar :

1. Mounting: Flanges with concealed fasteners.
2. Material: Stainless steel, 0.05 inch thick.
   a. Finish: Smooth, ASTM A480/A480M No. 4 finish (satin).
3. Outside Diameter: 1-1/2 inches.
4. Configuration and Length: As indicated on Drawings .

E. Sanitary-Napkin Disposal Unit :

1. Mounting: Partition mounted, dual access Surface mounted.
2. Door or Cover: Self-closing, disposal-opening cover and hinged face panel with tumbler lockset.
3. Receptacle: Removable.
4. Material and Finish: Stainless steel, ASTM A480/A480M No. 4 finish (satin) .

F. Mirror Unit :

1. Frame: Stainless steel angle, 0.05 inch thick .
   a. Corners: Manufacturer's standard .
2. Size: As indicated on Drawings .

G. Hook :

1. Description: Single-prong unit .
2. Mounting: Exposed.
3. Material and Finish: Stainless steel, ASTM A480/A480M No. 4 finish (satin) .

H. Fixed Height Adult Changing Station :

1. Description: Horizontal unit that opens by folding down from stored position and with adjustable strap.
   a. Engineered to support minimum of 400 lb static load when opened.
2. Mounting: Surface mounted, with unit projecting not more than 4 inches from wall when closed .

Copyright © 2025 by the American Institute of Architects. Warning: This AIA MasterSpec-based document is protected by U.S. Copyright Law and International Treaties. It was created by "Michael Shilale Architects, LLP" for "Renovation of Rockland Green Administrative Headquarters and Construction of an Immersive Theatre Experience". A valid, current MasterSpec license is required for editing and use of this document for any other project.(22360)

3. Operation: By pneumatic shock-absorbing mechanism.
4. Material and Finish: Stainless steel, ASTM A480/A480M No. 4 finish (satin), with replaceable insulated polystyrene tray liner and rounded plastic corners .
5. Liner Dispenser: Provide built-in dispenser for disposable sanitary liners.

2.4 TOILET-COMPARTMENT OCCUPANCY-INDICATOR SYSTEM

A. Toilet-Compartment Occupancy-Indicator System :

1. Description: Battery-powered latch and electrically powered indicator-light system. Latches communicate wirelessly with separate, overhead indicator lights.
2. Latch: Slide operation.
   a. Compatibility: Provide latch compatible with compartment doors indicated for Project.
   b. Latch Material and Finish: Matte chrome-plated, die-cast zinc alloy (zamac); installed with stainless steel fasteners.

2.5 HAND DRYERS

A. Source Limitations: Obtain hand dryers from single source from single manufacturer.

B. High-Speed Air Dryer :

1. Description: High-speed, warm -air hand dryer for rapid hand drying.
2. Mounting: Surface mounted.
   a. Protrusion Limit: Installed unit protrudes maximum 4 inches from wall surface.
3. Operation: Infrared-sensor activated with timed power cut-off switch.
   a. Average Dry Time: 12 seconds.
   b. Automatic Shut Off: At 60 seconds.
4. Maximum Sound Level: 69 dB.
5. Cover Material and Finish: Chrome-plated steel Stainless steel, ASTM A480/A480M No. 4 finish (satin) .
6. Electrical Requirements: 115 V, 15 A, 1725 W .

2.6 UNDERLAVATORY GUARDS

A. Underlavatory Guard :

1. Description: Insulating pipe covering for supply and drain piping assemblies that prevents direct contact with and burns from piping; allow service access without removing coverings.
2. Material and Finish: Antimicrobial, molded plastic, white.

Copyright © 2025 by the American Institute of Architects. Warning: This AIA MasterSpec-based document is protected by U.S. Copyright Law and International Treaties. It was created by "Michael Shilale Architects, LLP" for "Renovation of Rockland Green Administrative Headquarters and Construction of an Immersive Theatre Experience". A valid, current MasterSpec license is required for editing and use of this document for any other project.(22360)

2.7 CUSTODIAL ACCESSORIES

A. Source Limitations: Obtain each type of custodial accessory from single source from single manufacturer.

2.8 MATERIALS

A. Stainless Steel: ASTM A240/A240M or ASTM A666, Type 304, 0.031-inch- minimum nominal thickness unless otherwise indicated.

B. Brass: ASTM B19, flat products; ASTM B16/B16M, rods, shapes, forgings, and flat products with finished edges; or ASTM B30, castings.

C. Steel Sheet: ASTM A1008/A1008M, Designation CS (cold rolled, commercial steel), 0.036-inch- minimum nominal thickness.

D. Galvanized-Steel Sheet: ASTM A653/A653M, with G60 hot-dip zinc coating.

E. Galvanized-Steel Mounting Devices: ASTM A153/A153M, hot-dip galvanized after fabrication.

F. Fasteners: Screws, bolts, and other devices of same material as accessory unit, unless otherwise recommended by manufacturer or specified in this Section, and tamper and theft resistant where exposed, and of stainless or galvanized steel where concealed.

G. Chrome Plating: ASTM B456, Service Condition Number SC 2 (moderate service).

H. Mirrors: ASTM C1503, Mirror Glazing Quality, clear-glass mirrors, nominal 6.0 mm thick.

2.9 FABRICATION

A. General: Fabricate units with tight seams and joints, and exposed edges rolled. Hang doors and access panels with full-length, continuous hinges. Equip units for concealed anchorage and with corrosion-resistant backing plates.

B. Keys: Provide universal keys for internal access to accessories for servicing and resupplying. Provide minimum of six keys to Owner's representative.

PART 3 - EXECUTION

3.1 INSTALLATION

A. Install accessories in accordance with manufacturers' written instructions, using fasteners appropriate to substrate indicated and recommended by unit manufacturer. Install units level, plumb, and firmly anchored in locations and at heights indicated.

1. Remove temporary labels and protective coatings.

Copyright © 2025 by the American Institute of Architects. Warning: This AIA MasterSpec-based document is protected by U.S. Copyright Law and International Treaties. It was created by "Michael Shilale Architects, LLP" for "Renovation of Rockland Green Administrative Headquarters and Construction of an Immersive Theatre Experience". A valid, current MasterSpec license is required for editing and use of this document for any other project.(22360)

B. Grab Bars: Install to comply with specified structural-performance requirements.

C. Shower Seats: Install to comply with specified structural-performance requirements.

3.2 ADJUSTING AND CLEANING

A. Adjust accessories for unencumbered, smooth operation. Replace damaged or defective items.

B. Clean and polish exposed surfaces in accordance with manufacturer's written instructions.

END OF SECTION 102800

Copyright © 2025 by the American Institute of Architects. Warning: This AIA MasterSpec-based document is protected by U.S. Copyright Law and International Treaties. It was created by "Michael Shilale Architects, LLP" for "Renovation of Rockland Green Administrative Headquarters and Construction of an Immersive Theatre Experience". A valid, current MasterSpec license is required for editing and use of this document for any other project.(22360)

SECTION 104413 - FIRE PROTECTION CABINETS

PART 1 - GENERAL

1.1 SUMMARY

A. Section Includes:

1. Fire-protection cabinets for the following:
   a. Portable fire extinguisher.

B. Related Requirements:

1. Section 104416 "Fire Extinguishers" for portable, hand-carried fire extinguishers accommodated by fire-protection cabinets

1.2 PREINSTALLATION CONFERENCE

A. Preinstallation Conference: Conduct conference at Project site .

1. Review methods and procedures related to fire-protection cabinets, including, but not limited to, the following:
   a. Schedules and coordination requirements.

1.3 ACTION SUBMITTALS

A. Product Data: For each type of product.

1. Show door hardware, cabinet type, trim style, and panel style. Include roughing-in dimensions and details showing recessed-, semirecessed-, or surface-mounting method and relationships of box and trim to surrounding construction.
2. Show location of knockouts for hose valves.

B. Samples for Initial Selection: For each type of exposed finish required.

C. Product Schedule: For fire-protection cabinets. Indicate whether recessed, semirecessed, or surface mounted. Coordinate final fire-protection cabinet schedule with fire-extinguisher schedule to ensure proper fit and function. Use same designations indicated on Drawings.

1.4 CLOSEOUT SUBMITTALS

A. Maintenance Data: For fire-protection cabinets to include in maintenance manuals.

Copyright © 2025 by the American Institute of Architects. Warning: This AIA MasterSpec-based document is protected by U.S. Copyright Law and International Treaties. It was created by "Michael Shilale Architects, LLP" for "Renovation of Rockland Green Administrative Headquarters and Construction of an Immersive Theatre Experience". A valid, current MasterSpec license is required for editing and use of this document for any other project.(22360)

1.5 COORDINATION

A. Coordinate size of fire-protection cabinets to ensure that type and capacity of fire extinguishers indicated are accommodated.

B. Coordinate sizes and locations of fire-protection cabinets with wall depths.

PART 2 - PRODUCTS

2.1 MANUFACTURERS

A. Source Limitations: Obtain fire-protection cabinets, accessories, and fire extinguishers from single source from single manufacturer.

2.2 PERFORMANCE REQUIREMENTS

2.3 FIRE-PROTECTION CABINET

A. Cabinet Type: Suitable for fire extinguisher .

B. Cabinet Construction: Nonrated .

1. Fire-Rated Cabinets: Construct fire-rated cabinets with double walls fabricated from 0.043-inch- thick cold-rolled steel sheet lined with minimum 5/8-inch- thick fire-barrier material. Provide factory-drilled mounting holes.

C. Cabinet Material: Aluminum sheet Stainless steel sheet.

1. Shelf: Same metal and finish as cabinet.

D. Surface-Mounted Cabinet: Cabinet box fully exposed and mounted directly on wall with no trim.

E. Cabinet Trim Material: Aluminum sheet Extruded-aluminum shapes Stainless steel sheet Same material and finish as door.

F. Door Material: Aluminum sheet Extruded-aluminum shapes Stainless steel sheet .

G. Door Style: Full acrylic bubble with frame .

H. Door Glazing: Acrylic sheet .

1. Acrylic Sheet Color:
   a. Clear transparent acrylic sheet painted red on unexposed side.

I. Door Hardware: Manufacturer's standard door-operating hardware of proper type for cabinet type, trim style, and door material and style indicated.

Copyright © 2025 by the American Institute of Architects. Warning: This AIA MasterSpec-based document is protected by U.S. Copyright Law and International Treaties. It was created by "Michael Shilale Architects, LLP" for "Renovation of Rockland Green Administrative Headquarters and Construction of an Immersive Theatre Experience". A valid, current MasterSpec license is required for editing and use of this document for any other project.(22360)

1. Provide projecting door pull and friction latch .
2. Provide continuous hinge, of same material and finish as trim, , permitting door to open 180 degrees.

J. Accessories:

1. Mounting Bracket: Manufacturer's standard steel, designed to secure fire extinguisher to fire-protection cabinet, of sizes required for types and capacities of fire extinguishers indicated, with plated or baked-enamel finish.
2. Break-Glass Door Handle: Manufacturer's standard, integral to glass with the words "PULL TO BREAK GLASS" applied to handle.
3. Lettered Door Handle: One-piece, cast-iron door handle with the word "FIRE" embossed into face.
4. Identification: Lettering complying with authorities having jurisdiction for letter style, size, spacing, and location. Locate as indicated .
   a. Identify fire extinguisher in fire-protection cabinet with the words " FIRE EXTINGUISHER ."
      1) Location: Applied to location indicated on Drawings.
      2) Application Process: Silk-screened .
      3) Lettering Color: White.
      4) Orientation: Vertical .

K. Materials:

1. Stainless Steel: ASTM A240/A240M or ASTM A666, Type 304.
   a. Finish: ASTM A480/A480M No. 4 directional satin finish, .
2. Tempered Float Glass: ASTM C1048, Kind FT, Condition A, Type I, Quality q3, 3 mm thick, .
3. Transparent Acrylic Sheet: ASTM D4802, Category A-1 (cell-cast sheet), 3 mm thick, with Finish 1 (smooth or polished) .

2.4 FABRICATION

A. Fire-Protection Cabinets: Provide manufacturer's standard box (tub) with trim, frame, door, and hardware to suit cabinet type, trim style, and door style indicated.

1. Weld joints and grind smooth.
2. Miter corners and grind smooth.
3. Provide factory-drilled mounting holes.
4. Prepare doors and frames to receive locks.
5. Install door locks at factory.

B. Cabinet Doors: Fabricate doors according to manufacturer's standards, from materials indicated and coordinated with cabinet types and trim styles.

1. Fabricate door frames with tubular stiles and rails and hollow-metal design, minimum 1/2 inch thick.
2. Fabricate door frames of one-piece construction with edges flanged.
3. Miter and weld perimeter door frames and grind smooth.

Copyright © 2025 by the American Institute of Architects. Warning: This AIA MasterSpec-based document is protected by U.S. Copyright Law and International Treaties. It was created by "Michael Shilale Architects, LLP" for "Renovation of Rockland Green Administrative Headquarters and Construction of an Immersive Theatre Experience". A valid, current MasterSpec license is required for editing and use of this document for any other project.(22360)

C. Cabinet Trim: Fabricate cabinet trim in one piece with corners mitered, welded, and ground smooth.

2.5 GENERAL FINISH REQUIREMENTS

A. Comply with NAAMM's AMP 500, "Metal Finishes Manual for Architectural and Metal Products," for recommendations for applying and designating finishes.

B. Protect mechanical finishes on exposed surfaces of fire-protection cabinets from damage by applying a strippable, temporary protective covering before shipping.

C. Finish fire-protection cabinets after assembly.

D. Appearance of Finished Work: Noticeable variations in same piece are unacceptable. Variations in appearance of adjoining components are acceptable if they are within the range of approved Samples and are assembled or installed to minimize contrast.

PART 3 - EXECUTION

3.1 EXAMINATION

A. Proceed with installation only after unsatisfactory conditions have been corrected.

3.2 INSTALLATION

A. General: Install fire-protection cabinets in locations and at mounting heights indicated or, if not indicated, at height indicated below:

1. Fire-Protection Cabinet Mounting Height: 42 inches above finished floor to top of fire extinguisher.

B. Fire-Protection Cabinets: Fasten cabinets to structure, square and plumb.

1. Unless otherwise indicated, provide recessed fire-protection cabinets. If wall thickness is inadequate for recessed cabinets, provide semirecessed fire-protection cabinets.
2. Provide inside latch and lock for break-glass panels.
3. Fasten mounting brackets to inside surface of fire-protection cabinets, square and plumb.

C. Identification:

1. Apply decals at locations indicated.
2. Apply decals on field-painted fire-protection cabinets after painting is complete.

Copyright © 2025 by the American Institute of Architects. Warning: This AIA MasterSpec-based document is protected by U.S. Copyright Law and International Treaties. It was created by "Michael Shilale Architects, LLP" for "Renovation of Rockland Green Administrative Headquarters and Construction of an Immersive Theatre Experience". A valid, current MasterSpec license is required for editing and use of this document for any other project.(22360)

3.3 ADJUSTING AND CLEANING

A. Remove temporary protective coverings and strippable films, if any, as fire-protection cabinets are installed unless otherwise indicated in manufacturer's written installation instructions.

B. Adjust fire-protection cabinet doors to operate easily without binding. Verify that integral locking devices operate properly.

C. On completion of fire-protection cabinet installation, clean interior and exterior surfaces as recommended by manufacturer.

D. Touch up marred finishes, or replace fire-protection cabinets that cannot be restored to factory-finished appearance. Use only materials and procedures recommended or furnished by fire-protection cabinet and mounting bracket manufacturers.

E. Replace fire-protection cabinets that have been damaged or have deteriorated beyond successful repair by finish touchup or similar minor repair procedures.

END OF SECTION 104413

Copyright © 2025 by the American Institute of Architects. Warning: This AIA MasterSpec-based document is protected by U.S. Copyright Law and International Treaties. It was created by "Michael Shilale Architects, LLP" for "Renovation of Rockland Green Administrative Headquarters and Construction of an Immersive Theatre Experience". A valid, current MasterSpec license is required for editing and use of this document for any other project.(22360)

SECTION 104416 - FIRE EXTINGUISHERS

PART 1 - GENERAL

1.1 SUMMARY

A. Section includes portable, hand-carried fire extinguishers and mounting brackets for fire extinguishers.

B. Related Requirements:

1. Section 104413 "Fire Protection Cabinets."

1.2 PREINSTALLATION MEETINGS

A. Preinstallation Conference: Conduct conference at Project site .

1. Review methods and procedures related to fire extinguishers including, but not limited to, the following:
   a. Schedules and coordination requirements.

1.3 ACTION SUBMITTALS

A. Product Data: For each type of product. Include rating and classification, material descriptions, dimensions of individual components and profiles, and finishes for fire extinguisher and mounting brackets.

1.4 INFORMATIONAL SUBMITTALS

A. Warranty: Sample of special warranty.

1.5 CLOSEOUT SUBMITTALS

A. Operation and Maintenance Data: For fire extinguishers to include in maintenance manuals.

1.6 COORDINATION

A. Coordinate type and capacity of fire extinguishers with fire-protection cabinets to ensure fit and function.

Copyright © 2025 by the American Institute of Architects. Warning: This AIA MasterSpec-based document is protected by U.S. Copyright Law and International Treaties. It was created by "Michael Shilale Architects, LLP" for "Renovation of Rockland Green Administrative Headquarters and Construction of an Immersive Theatre Experience". A valid, current MasterSpec license is required for editing and use of this document for any other project.(22360)

1.7 WARRANTY

A. Special Warranty: Manufacturer's standard form in which manufacturer agrees to repair or replace fire extinguishers that fail in materials or workmanship within specified warranty period.

1. Failures include, but are not limited to, the following:
   a. Failure of hydrostatic test according to NFPA 10 when testing interval required by NFPA 10 is within the warranty period.
   b. Faulty operation of valves or release levers.
2. Warranty Period: Six years from date of Substantial Completion.

PART 2 - PRODUCTS

2.1 PERFORMANCE REQUIREMENTS

A. NFPA Compliance: Fabricate and label fire extinguishers to comply with NFPA 10, "Portable Fire Extinguishers."

2.2 PORTABLE, HAND-CARRIED FIRE EXTINGUISHERS

A. Fire Extinguishers: Type, size, and capacity for each fire-protection cabinet and mounting bracket indicated.

1. Source Limitations: Obtain fire extinguishers, fire-protection cabinets, and accessories, from single source from single manufacturer.
2. Valves: Nickel-plated, polished-brass body.
3. Handles and Levers: Stainless steel.
4. Instruction Labels: Include pictorial marking system complying with NFPA 10, Appendix B.

B. Multipurpose Dry-Chemical Type : UL-rated 5 lb. nominal capacity, with monoammonium phosphate-based dry chemical in manufacturer's standard enameled container.

2.3 MOUNTING BRACKETS

A. Mounting Brackets: Manufacturer's standard galvanized steel, designed to secure fire extinguisher to wall or structure, of sizes required for types and capacities of fire extinguishers indicated, with plated or red baked-enamel finish.

1. Source Limitations: Obtain mounting brackets and fire extinguishers from single source from single manufacturer.

B. Identification: Lettering complying with authorities having jurisdiction for letter style, size, spacing, and location. Locate as indicated by Architect.

Copyright © 2025 by the American Institute of Architects. Warning: This AIA MasterSpec-based document is protected by U.S. Copyright Law and International Treaties. It was created by "Michael Shilale Architects, LLP" for "Renovation of Rockland Green Administrative Headquarters and Construction of an Immersive Theatre Experience". A valid, current MasterSpec license is required for editing and use of this document for any other project.(22360)

1. Identify bracket-mounted fire extinguishers with the words "FIRE EXTINGUISHER" in red letter decals applied to mounting surface.
   a. Orientation: Vertical .

PART 3 - EXECUTION

3.1 EXAMINATION

A. Examine fire extinguishers for proper charging and tagging.

1. Remove and replace damaged, defective, or undercharged fire extinguishers.

B. Proceed with installation only after unsatisfactory conditions have been corrected.

3.2 INSTALLATION

A. General: Install fire extinguishers and mounting brackets in locations indicated and in compliance with requirements of authorities having jurisdiction.

B. Mounting Brackets: Fasten mounting brackets to surfaces, square and plumb, at locations indicated.

1. Mounting Height: Top of fire extinguisher to be at 42 inches above finished floor.

END OF SECTION 104416

Copyright © 2025 by the American Institute of Architects. Warning: This AIA MasterSpec-based document is protected by U.S. Copyright Law and International Treaties. It was created by "Michael Shilale Architects, LLP" for "Renovation of Rockland Green Administrative Headquarters and Construction of an Immersive Theatre Experience". A valid, current MasterSpec license is required for editing and use of this document for any other project.(22360)

SECTION 122413 - ROLLER WINDOW SHADES

PART 1 - GENERAL

1.1 RELATED DOCUMENTS

A. Drawings and general provisions of the Contract, including General and Supplementary Conditions and Division 01 Specification Sections, apply to this Section.

1.2 SUMMARY

A. Section Includes:

1. Manually operated roller shades with double rollers.

B. Related Requirements:

1. Section 061053 "Miscellaneous Rough Carpentry" for wood blocking and grounds for mounting roller shades and accessories.
2. Section 079200 "Joint Sealants" for sealing the perimeters of installation accessories for light-blocking shades with a sealant.

1.3 ACTION SUBMITTALS

A. Product Data: For each type of product.

1. Include construction details, material descriptions, dimensions of individual components and profiles, features, finishes, and operating instructions for roller shades.

B. Shop Drawings: Show fabrication and installation details for roller shades, including shadeband materials, their orientation to rollers, and their seam and batten locations.

C. Samples: For each exposed product and for each color and texture specified, 10 inches long.

D. Samples for Initial Selection: For each type and color of shadeband material.

1. Include Samples of accessories involving color selection.

E. Samples for Verification: For each type of roller shade.

1. Shadeband Material: Not less than 10 inches square. Mark interior face of material if applicable.
2. Roller Shade: Full-size operating unit, not less than 16 inches wide by 36 inches long for each type of roller shade indicated.
3. Installation Accessories: Full-size unit, not less than 10 inches long.

Copyright © 2025 by the American Institute of Architects. Warning: This AIA MasterSpec-based document is protected by U.S. Copyright Law and International Treaties. It was created by "Michael Shilale Architects, LLP" for "Renovation of Rockland Green Administrative Headquarters and Construction of an Immersive Theatre Experience". A valid, current MasterSpec license is required for editing and use of this document for any other project.(22360)

F. Product Schedule: For roller shades.

1.4 INFORMATIONAL SUBMITTALS

A. Qualification Data: For Installer.

B. Product Certificates: For each type of shadeband material.

C. Product Test Reports: For each type of shadeband material, for tests performed by manufacturer and witnessed by a qualified testing agency .

1.5 CLOSEOUT SUBMITTALS

A. Operation and Maintenance Data: For roller shades to include in maintenance manuals.

1.6 MAINTENANCE MATERIAL SUBMITTALS

A. Furnish extra materials that match products installed and that are packaged with protective covering for storage and identified with labels describing contents.

1. Roller Shades: Full-size units equal to 5 percent of quantity installed for each size, color, and shadeband material indicated, but no fewer than two units.

1.7 QUALITY ASSURANCE

A. Installer Qualifications: Fabricator of products.

B. Mockups: Build mockups to verify selections made under Sample submittals, to demonstrate aesthetic effects, and to set quality standards for fabrication and installation.

1. Approval of mockups does not constitute approval of deviations from the Contract Documents contained in mockups unless Architect specifically approves such deviations in writing.
2. Subject to compliance with requirements, approved mockups may become part of the completed Work if undisturbed at time of Substantial Completion.

1.8 DELIVERY, STORAGE, AND HANDLING

A. Deliver roller shades in factory packages, marked with manufacturer, product name, and location of installation using same designations indicated on Drawings.

Copyright © 2025 by the American Institute of Architects. Warning: This AIA MasterSpec-based document is protected by U.S. Copyright Law and International Treaties. It was created by "Michael Shilale Architects, LLP" for "Renovation of Rockland Green Administrative Headquarters and Construction of an Immersive Theatre Experience". A valid, current MasterSpec license is required for editing and use of this document for any other project.(22360)

1.9 FIELD CONDITIONS

A. Environmental Limitations: Do not install roller shades until construction and finish work in spaces, including painting, is complete and dry and ambient temperature and humidity conditions are maintained at the levels indicated for Project when occupied for its intended use.

B. Field Measurements: Where roller shades are indicated to fit to other construction, verify dimensions of other construction by field measurements before fabrication and indicate measurements on Shop Drawings. Allow clearances for operating hardware of operable glazed units through entire operating range. Notify Architect of installation conditions that vary from Drawings. Coordinate fabrication schedule with construction progress to avoid delaying the Work.

PART 2 - PRODUCTS

2.1 MANUFACTURERS

A. Source Limitations: Obtain roller shades from single source from single manufacturer.

2.2 MANUALLY OPERATED SHADES WITH DOUBLE ROLLERS

A. Manufacturers: Subject to compliance with requirements, provide products by one of the following:

1. Draper, Inc.
2. Hunter Douglas Architectural Window Coverings.
3. MechoShade Systems, LLC.

B. Chain-and-Clutch Operating Mechanisms: With continuous-loop bead chain and clutch that stops shade movement when bead chain is released; permanently adjusted and lubricated.

1. Bead Chains: Stainless steel .
   a. Loop Length: Full length of roller shade .
   b. Limit Stops: Provide upper and lower ball stops.
   c. Chain-Retainer Type: Chain tensioner, sill mounted .

C. Rollers: Corrosion-resistant steel or extruded-aluminum tubes of diameters and wall thicknesses required to accommodate operating mechanisms and weights and widths of shadebands indicated without deflection. Provide with permanently lubricated drive-end assemblies and idle-end assemblies designed to facilitate removal of shadebands for service.

1. Double-Roller Mounting Configuration: Offset, outside roller over and inside roller under .
2. Inside Roller:
   a. Drive-End Location: Right side of interior face of shade .
   b. Direction of Shadeband Roll: Regular, from back (exterior face) of roller .
3. Outside Roller:

Copyright © 2025 by the American Institute of Architects. Warning: This AIA MasterSpec-based document is protected by U.S. Copyright Law and International Treaties. It was created by "Michael Shilale Architects, LLP" for "Renovation of Rockland Green Administrative Headquarters and Construction of an Immersive Theatre Experience". A valid, current MasterSpec license is required for editing and use of this document for any other project.(22360)

a. Drive-End Location: Right side of interior face of shade .
b. Direction of Shadeband Roll: Regular, from back (exterior face) of roller .
4. Shadeband-to-Roller Attachment: Manufacturer's standard method .

D. Mounting Hardware: Brackets or endcaps, corrosion resistant and compatible with roller mounting configuration, roller assemblies, operating mechanisms, installation accessories, and installation locations and conditions indicated.

E. Inside Shadebands:

1. Shadeband Material: Light-filtering fabric .
2. Shadeband Bottom (Hem) Bar: Steel or extruded aluminum.
a. Type: Enclosed in sealed pocket of shadeband material .
b. Color and Finish: As selected by Architect from manufacturer's full range .

F. Outside Shadebands:

1. Shadeband Material: Light-blocking fabric .
2. Shadeband Bottom (Hem) Bar: Steel or extruded aluminum.
a. Type: Enclosed in sealed pocket of shadeband material .
b. Color and Finish: As selected by Architect from manufacturer's full range .

G. Installation Accessories:

1. Front Fascia: Aluminum extrusion that conceals front and underside of roller and operating mechanism and attaches to roller endcaps without exposed fasteners.
a. Shape: L-shaped .
b. Height: Manufacturer's standard height required to conceal roller and shadeband assembly when shade is fully open, but not less than 4 inches .
2. Closure Panel and Wall Clip: Removable aluminum panel designed for installation at bottom of site-constructed ceiling recess or pocket and for snap-in attachment to wall clip without fasteners.
a. Closure-Panel Width: 2 inches .
3. Installation Accessories Color and Finish: As selected from manufacturer's full range .

2.3 SHADEBAND MATERIALS

A. Shadeband Material Flame-Resistance Rating: Comply with NFPA 701 . Testing by a qualified testing agency. Identify products with appropriate markings of applicable testing agency.

B. Light-Filtering Fabric: Woven fabric, stain and fade resistant.

1. Source: Roller shade manufacturer .
2. Type: Woven PVC-coated fiberglass and PVC-coated polyester .
3. Weave: Basketweave .
4. Color: As selected by Architect from manufacturer's full range .

Copyright © 2025 by the American Institute of Architects. Warning: This AIA MasterSpec-based document is protected by U.S. Copyright Law and International Treaties. It was created by "Michael Shilale Architects, LLP" for "Renovation of Rockland Green Administrative Headquarters and Construction of an Immersive Theatre Experience". A valid, current MasterSpec license is required for editing and use of this document for any other project.(22360)

2.4 ROLLER SHADE FABRICATION

A. Product Safety Standard: Fabricate roller shades to comply with WCMA A 100.1, including requirements for flexible, chain-loop devices; lead content of components; and warning labels.

B. Unit Sizes: Fabricate units in sizes to fill window and other openings as follows, measured at 74 deg F:

1. Between (Inside) Jamb Installation: Width equal to jamb-to-jamb dimension of opening in which shade is installed less 1/4 inch per side or 1/2-inch total, plus or minus 1/8 inch. Length equal to head-to-sill or -floor dimension of opening in which shade is installed less 1/4 inch, plus or minus 1/8 inch.

PART 3 - EXECUTION

3.1 EXAMINATION

A. Examine substrates, areas, and conditions, with Installer present, for compliance with requirements for installation tolerances, operational clearances, and other conditions affecting performance of the Work.

B. Proceed with installation only after unsatisfactory conditions have been corrected.

3.2 ROLLER SHADE INSTALLATION

A. Install roller shades level, plumb, and aligned with adjacent units according to manufacturer's written instructions.

1. Opaque Shadebands: Located so shadeband is not closer than 2 inches to interior face of glass. Allow clearances for window operation hardware.

B. Roller Shade Locations: At exterior windows .

3.3 ADJUSTING

A. Adjust and balance roller shades to operate smoothly, easily, safely, and free from binding or malfunction throughout entire operational range.

3.4 CLEANING AND PROTECTION

A. Clean roller shade surfaces, after installation, according to manufacturer's written instructions.

B. Provide final protection and maintain conditions, in a manner acceptable to manufacturer and Installer, that ensure that roller shades are without damage or deterioration at time of Substantial Completion.

Copyright © 2025 by the American Institute of Architects. Warning: This AIA MasterSpec-based document is protected by U.S. Copyright Law and International Treaties. It was created by "Michael Shilale Architects, LLP" for "Renovation of Rockland Green Administrative Headquarters and Construction of an Immersive Theatre Experience". A valid, current MasterSpec license is required for editing and use of this document for any other project.(22360)

C. Replace damaged roller shades that cannot be repaired, in a manner approved by Architect, before time of Substantial Completion.

END OF SECTION 122413

Copyright © 2025 by the American Institute of Architects. Warning: This AIA MasterSpec-based document is protected by U.S. Copyright Law and International Treaties. It was created by "Michael Shilale Architects, LLP" for "Renovation of Rockland Green Administrative Headquarters and Construction of an Immersive Theatre Experience". A valid, current MasterSpec license is required for editing and use of this document for any other project.(22360)

SECTION 220500

COMMON WORK RESULTS FOR PLUMBING

1.01 SCOPE AND INTERPRETATION

A. These Specifications and accompanying Drawings provide for the furnishing, setting and connection of the installation of drainage and water supply systems.

B. The specifications and Drawings require the Contractor to provide all labor, materials, equipment and appliances to perform of all Work pertaining or incidental thereto, which is needed to complete the Work shown on the Drawings and called for in the Specifications.

C. The complete systems and the Work shall be so installed as to give proper and continuous service under all conditions, and shall be in accordance with the requirements of all public authorities having jurisdiction and to the complete satisfaction of the Owner. Any Work shown on the Drawings and not particularly described in the specifications, or vice versa or any Work which may be deemed necessary to complete the Contract shall be provided by the Contractor as part of its Contract.

D. For purposes of clearness and legibility, plumbing Drawings are essentially diagrammatic and size and location of equipment are drawn to scale wherever possible. The Drawings indicate size, connection points and routes of pipe. It is not intended, however, that all offsets, rises and drops are shown. Provide piping as required to fit structure, avoid obstruction, and retain clearances, headroom openings and passageways.

E. Fixtures shown and described on the Drawings shall be connected with waste, vent and water supply piping in accordance with the requirements of New York State Building Code, despite the omission of indication of such piping on the plans. Any question involving the installation of such piping shall be referred to the Engineer for resolution.

F. Scope of Work: The plumbing and drainage work of this contract shall include but shall not be limited to the following systems, equipment and services:

1. Equipment furnished under other Sections of this Contract: Including fire protection equipment shall be piped.

2. Piping, Equipment Supports, and seismic restraints: To comprise all restraints, hangers, pipe guides, rods, beam clamps, brackets, pipe anchors, other attachments, floor flanges, masonry anchors, bolts, nuts, washers, and other items as required to fully support all piping and equipment installed under this contract inclusive of spring hangers, seismic restraints, and vibration mounts where recommended by equipment manufacturers, where required to meet noise abatement regulations and as necessary to prevent piping and equipment vibrations being transmitted to structure.

3. Provide unions and stop valves at all equipment connections and where required for service, repairs and draining.

4. Piping - General: Piping, Piping installation or hook-up shall mean a complete installation in all respects including pipe, fittings, valves, unions, traps, strainers, specialties and other miscellaneous items to make piping systems and equipment operational.

5. Painting and Identification: As specified in their respective sections of this Contract.

6. Miscellaneous Work: Included shall be all items of materials, piping, controls, wiring and other miscellaneous items not specifically shown on Contract Drawings or called for herein but which are normally furnished and required for a complete installation of this type.

7. Sealing of Openings: Openings left in walls, floors, ceilings or partitions shall be sealed. Finish shall match existing adjoining finish in all respects.

8. Coordination Drawings: The plumbing contractor shall cooperate with the Fire Protection Systems, Mechanical**,** and Electrical contractors in the development of the coordination drawings. The specified order in which the various trade contractors impose their work on the coordination drawings is not intended to grant priority to any one trade contractor in the allocation of space. At the completion of this phase, hold a coordination meeting to eliminate any interference among the trades that the drawings indicate and to avoid any conflicts in installing the Work.

1.02 CODES AND STANDARDS

A. It shall be unlawful for any person to perform the work referred to under this Plumbing and Drainage Specifications and/or shown on the Plumbing and Drainage Contract Drawings unless such person is a licensed master plumber, partnership, corporation or other business association as permitted by the New York State Building Code and unless such work is performed under the direct and continuing supervision of a licensed master plumber.

B. Where requirements for products, materials, systems, equipment, methods and other portion of the work specified herein exceed minimum requirements of regulatory agencies having jurisdiction over the construction work, contractor shall comply with such requirements specified herein, unless specifically approved otherwise by the Owner.

1.03 TORCH BURNING OPERATION

A. The storing and use of oxygen and combustible gases in conjunction with torch burning apparatus is subject to the Rules and Regulations of the New York State Building and Fire Code. Fire watches shall be provided during all operations using torches for burning, cutting or welding.

B. The cost of permits, certificates, fire watches, apparatus and other items required in the torch burning operation shall be borne by the Contractor at no additional cost to the Owner.

1.04 PROTECTION OF MATERIALS AND WORK

A. Existing Building

1. Open ends of piping shall be temporarily closed by a proper fitting, until piping is approved and ready for service.

2. Equipment and other items shall be protected during the progress of the Work. When the building is practically complete and ready for use the fixtures and other items shall be cleaned and all metal work polished and the entire installation put in perfect working order.

1.05 GUARANTEES AND WARRANTIES

A. The Requirements of Section G01740 and this Article shall apply to Guarantees and Warranties.

B. Contractor's Guarantees: The Contractor guarantees that all Work of this Contract is free from all defects, and is as specified, and that should any defects, which cannot be proven to have been caused by improper use, develop within the space of one year from the date of substantial completion of the Work, such defects shall be made good by the Contractor, free of cost to the Owner.

1.07 OPENINGS AND CHASES

A. Openings through exterior foundation walls shall be made watertight by the Contractor after pipes, conduits and other items passing through the wall have been installed. This building is planned and detailed, and is the intent of these specifications to provide a structure that will prevent the penetration by rodents and vermin of any vacant space where they might find a harborage. The Contractor will be held responsible for securing this condition by the closing of all points of access to such spaces, including the passage of piping and conduits, through all walls, partitions, ceilings and furred out spaces, the closing of access to voids in hollow tile or cinder blocks. There shall be a special inspection of the building with regard to this matter before final acceptance.

1.08 INSTRUCTION OF STAFF

A. After the plumbing, drainage systems have been tested, and fixtures, apparatus and all other items adjusted and operating properly to the satisfaction of the Owner, Contractor shall furnish a competent person to instruct the staff in the operation and maintenance of the systems. Contractor shall video record all the training sessions for various equipment and systems as specified in individual sections of these Specifications. Determination of the date and time of such instruction shall be under the direction of the Owner.

1.10 SUBMITTALS

A. Formal submission for approval of manufacturer is required as per manufacturer/model number or series listed in the specification. Formal submissions are required for materials and appurtenances (ex. sheet metal, pipes, etc.) as defined in the specification. Submittals are always required to verify capacity. Schedules, installation instructions, startup manuals, operation and maintenance manuals, and shop drawings are always required to be submitted.

1.11 CLEANING AND REPAIR

A. At the completion of the Work and before the final inspection is made the Contractor shall thoroughly clean all apparatus, appurtenances, piping, and leave these items free from all marks, scratches, stains, and other damage. All equipment shall be cleaned and left in condition to operate, and the work, as a whole, left in perfect working order. Remove all tools, debris and excess materials from the premises.

B. Contractor shall not leave sharp exposed metal edges (bottom of threaded rods, P&D equipment supports, etc.) that could otherwise present safety hazards to the building's occupants/work staff.

END OF SECTION

SECTION 220523

VALVES

PART 1 GENERAL

1.01 QUALITY ASSURANCE

A. General:
   a. Materials and components manufactured for potable water use shall contain no more than a weighted average of 0.25 percent lead with respect to the wetted surfaces and meet the requirements of NSF/ANSI 372, third part testing and certification.

1.02 ABBREVIATIONS

A. IBBM: Iron body, bronze mounted.

B. OS&Y: Outside screw and yoke.

1.03 SUBMITTALS

A. Product Data: Manufacturer's catalog sheets and specifications for each valve type.

1.04 MAINTENANCE

A. Special Tools:

1. One wrench for each type and size wrench operated plug valve.

PART 2 PRODUCTS

2.01 VALVES - GENERAL

A. Valve Standardization: Valves from one or more manufacturers may be used, however valves supplied for each specific valve type shall be the product of one manufacturer.

B. Valves shall be first quality, free from all imperfections and defects, with body markings indicating manufacturer and rating.

C. Valve parts of same manufacturer, size and type shall be interchangeable.

D. Manually operated gate, globe and angle valves shall be of rising stem type, unless otherwise specified.

E. Valves which use packing, shall be capable of being packed when wide open and under full working pressure.

F. Size valves the same size as the piping in which they are installed, unless specified otherwise.

2.02 GATE VALVES

A. 125 psig WSP, 200 psig WOG up to 12 inch size, and 150 psig WOG for 14 inch and 16 inch sizes; IBBM OS&Y, bolted bonnet, solid wedge disc, and threaded or flanged ends depending on size. Acceptable Valves: Crane 464-1/2, 465-1/2, Hammond IR1140, Milwaukee F2885, Nibco T6170 & F6170, and Stockham G620 & G623

2.03 CHECK VALVES

A. 125 psig WSP, 200 psig WOG, IBBM, horizontal swing, bolted bonnet, regrindable and renewable seat ring and disc, and threaded or flanged ends depending on size. Discs on valves 4 inch size and larger may be cast iron with bronze face. Acceptable Valves: Crane 372, & 373, Hammond IR1124, Jenkins 623CJ & 624CJ, Milwaukee F2974, Nibco F918, and Stockham G927 & G931.

2.04 BALL VALVES

A. 150 psig WSP, 600 psig WOG, 2 piece bronze body, solid blow-out proof stem, teflon seats, chrome plated brass ball, teflon seals, corrosion resistant steel lever handles with vinyl grips, balancing stop, and threaded or solder ends. Acceptable Manufacturers: Conbraco, Hammond, Milwaukee, Nibco, and Watts.

2.05 GLOBE VALVES

A. 2 inches and Smaller: MSS SP 80, Class 125, bronze body, bronze trim, threaded bonnet, hand wheel, teflon composition disc, threaded ends.
B. 2-1/2 inches and Larger: MSS SP 85, Class 125, cast iron body, bronze trim, hand wheel, outside screw and yoke, flanged ends.
C. Acceptable Manufacturers: Crane, Milwaukee Valve, NIBCO, and Watts.

2.06 PLUG VALVES

A. Lubricated plug valves for use on gas distribution piping; mains, branches and base of risers shall be cast iron body, rated for 200 pounds cold working pressure and shall be wrench operated.
B. Lubricated plug valves 2" and smaller shall be short pattern threaded; 2½" and larger shall be regular pattern flanged.
C. Lubricated plug valves shall be Nordstrom Valves Inc. Fig. 142 for sizes 2" and smaller, Fig. 115 for sizes 2½" through 4" inclusive, Fig. 165 for sizes 6" and 8"; or Walworth Fig. 1796 for sizes 2" and smaller, Fig. 1700F for sizes 2½" through 8".

D. Gas cocks shall be for use only as manual gas shut-off valves at each piece of gas burning equipment; shall be of the plug type, bronze construction with check, nut and washer bottom and tee handle. Gas cocks shall be Fig. 10596 as manufactured by A. Y. McDonald Mfg. Co., or Series 52 as manufactured by Conbraco Industries, Inc.

a. Gas cocks shall only be used on piping 1" and smaller.

PART 3 EXECUTION

3.01 INSTALLATION

A. General: Install valves at locations noted on the drawings or specified.

END OF SECTION

SECTION 22 05 29

PIPE HANGERS AND SUPPORTS

PART 1 GENERAL

1.01 PRODUCTS FURNISHED BUT NOT INSTALLED UNDER THIS SECTION

A. Companion high density filler pieces for installation over the top 180 degree surface of pipe or tubing, at points of support where a combination clevis hanger, insulation shield and high density insulating saddle are installed.

1.02 RELATED WORK SPECIFIED ELSEWHERE

A. N/A

1.03 SUBMITTALS

A. Shop Drawings:

1. Details of trapeze hangers and upper hanger attachments for piping 4 inches in diameter and over. Include the number and size of pipe lines to be supported on each type of trapeze hanger.

2. Details of pipe anchors.

3. Details and method of installing sway braces for cast iron soil pipe.

B. Product Data: Catalog sheets, specifications and installation instructions for each item specified except fasteners.

1.04 QUALITY ASSURANCE

A. Regulatory Requirements:

1. Comply with the applicable requirements of the ASME B31 Piping Codes.

2. Unless otherwise shown or specified, comply with the requirements of the Manufacturer's Standardization Society of the Valve and Fittings Industry (MSS) Standards SP-58, and SP-69.

3. Materials for use in Sprinkler Systems and Standpipe and Hose Systems shall comply with the requirements of NFPA 13 and NFPA 14 as applicable.

PART 2 PRODUCTS

2.01 PIPE HANGERS AND SUPPORTS

A. Combination clevis hanger, pipe insulation shield and vapor barrier jacketed high density insulating saddle with companion high density filler piece.

1. Insulating saddles and filler pieces shall be of the same thickness and materials as the adjoining pipe insulation. Saddles shall cover the lower 180 degrees of the pipe or tubing, and companion filler pieces shall cover the upper 180 degrees of the pipe or tubing. Physical sizes, gages, etc. of the components of insulated hangers shall be in accordance with the following schedule:

PIPE OR TUBING SIZE (Inches)	SHIELD LENGTH (Inches)	SHIELD GAGE	SADDLE LENGTH (Inches)	VAPOR BARRIER JACKET LENGTH (Inches)
Up to 2-1/2	4	16	6	10

B. Pipe Insulation Shields: Fabricated of steel, with a minimum arc of 180 degrees, unless otherwise indicated. Shields for use with hangers and supports, with the exception of combination clevis type hangers, shall be in accordance with the following schedule:

PIPE OR TUBING SIZE (Inches)	SHIELD LENGTH (Inches)	SHIELD GAGE
Up to 2-1/2	8	18

C. Pipe Covering Protection Saddles: 3/16 inch thick steel, of sufficient depth for the insulation thickness specified, notched so that saddle contact with the pipe is approximately 50 percent of the total axial cross section. Saddles for pipe 12 inches in size and larger shall have a center support.

D. Pipe Hangers: Height adjustable standard duty clevis type, with cross bolt and nut.

1. Pipe spreaders or spacers shall be used on cross bolts of clevis hangers, when supporting piping 10 inches in size and larger.

2. Swivel ring type hangers will be allowed for sprinkler piping up to a maximum of 2 inches in size.

E. Adjustable Floor Rests and Base Flanges: Steel.

F. Hanger Rods: Mild, low carbon steel, fully threaded or threaded at each end, with two nuts at each end for positioning rod and hanger, and locking each in place.

G. Riser Clamps: Malleable iron or steel.

2.02 ANCHORS AND ATTACHMENTS

A. Sleeve Anchors (Group II, Type 3, Class 3): Molly's Div./USM Corp. Parasleeve Series, Ramset's Dynabolt Series, or Red Head/Phillips AN, HN, or FS Series.

B. Wedge Anchors (Zinc Plated, Group II, Type 4, Class 1): Hilti's Kwik Bolt Series, Molly's Div./USM Corp. Parabolt PB Series, Ramset's Trubolt T Series, or Red Head/Phillips WS Series.

C. Self-Drilling Anchors (Group III, Type 1): Ramset's RD Series, or Red Head/Phillips S Series.

D. Non-Drilling Anchors (Group VIII, Type 1): Ramset's Dynaset DS Series, Hilti's HDI Series, or Red Head/Phillips J Series.

E. Stud Anchors (Group VIII, Type 2): Red Head/Phillips JS Series.

F. Beam Clamps: Forged steel beam clamp, with weldless eye nut (right hand thread), steel tie rod, nuts, and washers, Grinnell's Fig No. 292 (size for load, beam flange width, and rod size required).

G. Metal Deck Ceiling Bolts: B-Line Systems' Fig. B3019.

H. Continuous Slotted Type Concrete Insert, Galvanized:

1. Load Rating 800 lbs/ft: Kindorf's D-986.

2. Load Rating 1500 lbs/ft: Kindorf's D-980.

3. Load Rating 3000 lbs/ft: Hohmann & Barnard's Inc. Type CS-H.

4. Load Rating 4500 lbs/ft: Hohmann & Barnard's Inc. Type CS-HD.

I. Threaded Type Concrete Insert: Galvanized ferrous castings, internally threaded to receive 3/4 inch diameter machine bolts.

J. Wedge Type Concrete Insert: Galvanized box-type ferrous castings, designed to accept 3/4 inch diameter bolts having special wedge shaped heads.

2.03 FASTENERS

A. Bolts, Nuts, Washers, Lags, and Screws: Medium carbon steel; size and type to suit application; galvanized for high humidity locations, and treated wood; plain finish for other interior locations. Except where shown otherwise on the Drawings, furnish type, size, and grade required for proper installation of the Work.

2.04 SHOP PAINTING AND PLATING

A. Hangers, supports, rods, inserts and accessories used for pipe supports, unless chromium plated, cadmium plated or galvanized shall be shop coated with metal

primer paint. Electroplated copper hanger rods, hangers and accessories may be used with copper pipe or copper tubing.

B. Hanger supports for chromium plated pipe shall be chromium plated brass.

2.05 SLEEVES

A. Sleeves for Pipes through Non-fire Rated Floors: 18 gage thick galvanized steel.

B. Sleeves for pipes through Rated Construction: Galvanized steel, thickness as required to meet UL1479 requirements.

C. Sealant: Acrylic; refer to Division 07.

2.06 FIRESTOPPING

A. Manufacturers: Subject to requirements of the specification, provide the following manufacturer's products by one of the following or approved equal:
1. Dow Corning Corp.
2. Fire Trak Corp.
3. Hilti Corp.
4. 3M fire Protection Products
5. Specified Technology, Inc.
6. Substitutions: Division 01 - Product Requirements.

B. Product Description: Different types of products by multiple manufacturers are acceptable as required to meet specified system description and performance requirements; provide only one type for each similar application.
1. Silicone Firestopping Elastomeric Firestopping: Multiple component silicone elastomeric compound and compatible silicone sealant.
2. Foam Firestopping Compounds: Multiple component foam compound.
3. Formulated Firestopping Compound of Incombustible Fibers: Formulated compound mixed with incombustible non-asbestos fibers.
4. Fiber Stuffing and Sealant Firestopping: Composite of ceramic fiber stuffing insulation with silicone elastomer for smoke stopping.
5. Mechanical Firestopping Device with Fillers: Mechanical device with incombustible fillers and silicone elastomer, covered with sheet stainless steel jacket, joined with collars, penetration sealed with flanged stops.
6. Intumescent Firestopping: Intumescent putty compound which expands on exposure to surface heat gain.
7. Firestop Pillows: Formed mineral fiber pillows.

C. Firestopping system shall meet UL1479 requirements.

D. Color: As selected from manufacturer's full range of colors.

2.07 FIRESTOPPING ACCESSORIES

A. Primer: Type recommended by firestopping manufacturer for specific substrate surfaces and suitable for required fire ratings.

B. Dam Material: Permanent:
1. Mineral fiberboard.
2. Sheet metal.
3. Alumina silicate fire board.

C. Installation Accessories: Provide clips, collars, fasteners, temporary stops or dams, and other devices required to position and retain materials in place.

D. General:
1. Furnish UL listed products.
2. Select products with rating not less than rating of wall or floor being penetrated.

E. Non-Rated Surfaces:
1. Stamped steel, chrome plated, hinged, split ring escutcheons or floor plates or ceiling plates for covering openings in occupied areas where piping is exposed.

PART 3 EXECUTION

3.01 PREPARATORY WORK

A. Place inserts into construction form work expeditiously, so as not to delay the Work.

3.02 INSTALLATION

A. Do not hang or support one pipe from another or from ductwork.

1. Do not bend threaded rod.

B. Support all insulated horizontal piping conveying fluids below ambient temperature, by means of hangers or supports with insulation shields installed outside of the insulation.

C. Space hangers or supports for horizontal piping on maximum center distances as listed in the following hanger schedules, except as otherwise specified, or noted on the Drawings.

1. For Steel, and Threaded Brass Pipe:

PIPE SIZE (Inches)	MAXIMUM SPACING (Feet)
1 and under	8
1-1/4 and 1-1/2	9
2	10
2-1/2 and up	12

2. For Copper Pipe and Copper Tubing:

PIPE OR TUBING SIZE (Inches)	MAXIMUM SPACING (Feet)
1-1/2 and under	6
2 and over	10

3. For Directional Changes: Install a hanger or support close to the point of change of direction of all pipe runs in either a horizontal or vertical plane.

4. For Concentrated Loads: Install additional hangers or supports, spaced as required and directed, at locations where concentrated loads such as in-line pumps, valves, fittings or accessories occur, to support the concentrated loads.

5. For Branch Piping Runs and Runouts over 5 feet in Length: Install a minimum of one hanger, and additional hangers if required by the hanger spacing schedules.

6. Parallel Piping Runs: Where several pipe lines run parallel in the same plane and in close proximity to each other, trapeze hangers may be submitted for approval. Base hanger spacing for trapeze type hangers on the smallest size of pipe being supported. Design the entire hanger assembly based on a safety factor of five, for the ultimate strength of the material being used.

7. Support floor drain traps from the overhead construction, with hangers of type and design as required and approved. Overhead supports are not required for floor drain traps installed directly below earth supported concrete floors.

D. Size hanger rods in accordance with the following:

PIPE OR TUBING SIZE (Inches)	SINGLE ROD HANGER SIZE (Inches)		DOUBLE ROD HANGER SIZE (Inches)	
	PIPE	TUBING	PIPE	TUBING
1/2 to 2	3/8	1/4	3/8	1/4
2-1/2 and 3	1/2	3/8	3/8	1/4

1. Size hanger rods, for piping over 12 inches in size and multiple line supports, based on a safety factor of five for the ultimate strength of the materials being used.
2. Secure hanger rods as follows: Install one nut under clevis, angle or steel member; one nut on top of clevis, angle or steel member; one nut inside insert or on top of upper hanger attachment and one nut and washer against insert or on lower side of upper hanger attachment. A total of four nuts are required for each rod, two at upper hanger attachment and two at hanger.

E. Vertical Piping:

1. Support vertical risers of piping systems, by means of heavy duty hangers installed close to base of pipe risers, and by riser clamps with extension arms at intermediate floors, with the distance between clamps not to exceed 25 feet, unless otherwise specified. Support pipe risers in vertical shafts equivalent to the aforementioned. Install riser clamps above floor slabs, with the extension arms resting on floor slabs. Provide adequate clearances for risers that are subject to appreciable expansion and contraction, caused by operating temperature ranges.

2. Support extension arms of riser clamps, secured to risers to be insulated for cold service, 4 inches above floor slabs, to allow room for insulating and vapor sealing around riser clamps.

3. Install intermediate supports between riser clamps on maximum 6 foot centers, for copper tubing risers 1-1/4" in size and smaller, installed in finished rooms or spaces other than mechanical equipment machine or steam service rooms, or penthouse mechanical equipment rooms.

4. Support cast iron risers, by means of heavy duty hangers installed close to the base of the pipe risers, and 1/4 inch thick malleable iron or steel riser clamps with extension arms at each floor level, with the distance between clamps not to exceed 25 feet. Support cast iron risers in vertical shafts equivalent to the aforementioned.

5. Support hubless cast iron risers, by means of heavy duty hangers installed close to the base of the pipe risers, and by malleable iron or steel riser clamps with the extension arms at each floor level, with the distance between clamps or intermediate supports not to exceed 12 feet. Support risers in vertical shafts equivalent to the aforementioned.

F. Floor Supports: Install adjustable yoke rests with base flanges, for the support of piping, unless otherwise indicated on the Drawings. Install supports in a manner, which will not be detrimental to the building structure.

G. Underground Cast Iron Pipe Supports: Firmly bed pipe laid underground, on solid ground along bottom of pipe. Install masonry piers for pipe laid in disturbed or excavated soil or where suitable bearing cannot be obtained. Support pipe, laid proximate to building walls in disturbed or excavated soil, or where suitable bearing cannot be obtained, by means of wall brackets or hold-fasts secured to walls in an approved manner.

3.03 UPPER HANGER ATTACHMENTS

A. General:

1. Secure upper hanger attachments to overhead structural steel, steel bar joists, or other suitable structural members.

2. Do not attach hangers to steel decks that are not to receive concrete fill.

3. Do not attach hangers to precast concrete plank decks less than 2-3/4 inches thick.

4. Do not use flat bars or bent rods as upper hanger attachments.

B. Attachment to Steel Frame Construction: Provide intermediate structural steel members where required by pipe support spacing. Select steel members for use as intermediate supports based on a minimum safety factor of five.

1. Do not use drive-on beam clamps.

2. Do not support piping over 4 inches in size from steel bar joists. Secure upper hanger attachments to steel bar joists at panel points of joists.

3. Do not drill holes in main structural steel members.

4. Beam clamps, with tie rods as specified, may be used as upper hanger attachments for the support of piping, subject to clamp manufacturer's recommended limits.

C. Attachment to Existing Cast-In-Place Concrete:

1. For piping up to a maximum of 4 inches in size, secure hangers to overhead construction with self-drilling type expansion shields and machine bolts.

2. Secure hangers to wall or floor construction with single unit expansion shields or self-drilling type expansion shields and machine bolts.

3.04 ANCHORS, RESTRAINTS, RIGID SUPPORTS, STAYS AND SWAY BRACES

A. Install pipe anchors, restraints and sway braces, at locations noted on the Drawings. Design anchors so as to permit piping to expand and contract freely in opposite directions, away from anchor points. Install anchors independent of all hangers and supports, and in a manner that will not affect the structural integrity of the building.

B. Cast Iron Soil Piping Systems:

1. Where piping is suspended on centers in excess of 18 inches by means of non-rigid hangers, provide sway braces, of design, number and location in accordance with the Cast Iron Soil Pipe Institute's Cast Iron Soil Pipe and Fittings Handbook to prevent horizontal pipe movement.

2. Additionally, brace piping 5 inches and larger to prevent horizontal movement and/or joint separation. Provide braces, blocks, rodding or

other suitable method at each branch opening, or change of direction in accordance with the Cast Iron Soil Pipe Institute's Cast Iron Soil Pipe and Fittings Handbook to prevent horizontal pipe movement.

3.05 PIPING IN TUNNELS

A. Support piping in tunnels on adjustable stanchions, fabricated in accordance with the details on the Drawings, unless otherwise indicated. Install, secure and be responsible for the proper locations of all cast-in-place inserts and stanchion supports, in ample time so as not to delay construction Work. Secure tops of stanchions to overhead construction, as required and approved.

3.06 COMBINATION CLEVIS HANGER, PIPE INSULATION SHIELD AND VAPOR BARRIER JACKETED HIGH DENSITY INSULATING SADDLES

A. Install a combination clevis hanger, pipe insulation shield and vapor barrier jacketed high density insulating saddles, at all points of support for piping or tubing to be insulated for cold service. Furnish companion high density vapor barrier jacketed saddle pieces, of the same material, thickness and length, for installation over the top 180 degree surface of pipe or tubing, at each point of support where an insulated clevis hanger is utilized.

3.07 PIPE INSULATION SHIELDS

A. Unless otherwise specified, install a pipe insulation shield, at all points of support. Center shields on all hangers and supports outside of high density insulation insert, and install in such a manner so as not to cut, or puncture jacket.

3.08 PIPE COVERING PROTECTION SADDLES

A. Install pipe covering protection saddles at all points of support, for steel piping 6 inches in size and larger, insulated with hot service insulation. Weld saddles to piping to insure movement with pipe.

3.09 INSTALLATION - SLEEVES

A. Exterior watertight entries: Seal with mechanical sleeve seals.

B. Set sleeves in position in forms. Provide reinforcing around sleeves.

C. Size sleeves large enough to allow for movement due to expansion and contraction. Provide for continuous insulation wrapping.

D. Extend sleeves through floors 1 inch above finished floor level. Caulk sleeves.

E. Where piping penetrates floor, ceiling, or wall, close off space between pipe and adjacent work with firestopping insulation and caulk airtight. Provide close fitting metal collar or escutcheon covers at both sides of penetration.

F. Install chrome plated steel escutcheons at finished surfaces.

3.10 INSTALLATION - FIRESTOPPING

A. Install material at fire rated construction perimeters and openings containing penetrating sleeves, piping and other items, requiring firestopping to meet UL1479 requirements.

B. Apply primer where recommended by manufacturer for type of firestopping material and substrate involved, and as required for compliance with required fire ratings.

C. Apply firestopping material in sufficient thickness to achieve required fire and smoke rating, to uniform density and texture.

D. Place intumescent coating in sufficient coats to achieve rating required.

E. Remove dam material after firestopping material has cured.

F. Fire Rated Surface:
1. Seal opening at floor, wall, partition, ceiling, and roof as follows:
a. Install sleeve through opening and extending beyond minimum of 1 inch on both sides of building element.
b. Size sleeve allowing minimum of 1 inch void between sleeve and building element.
c. Pack void with backing material.
d. Seal ends of sleeve with UL listed fire resistive silicone compound to meet fire rating of structure penetrated.

G. Non-Rated Surfaces:
1. Seal opening through non-fire rated wall, partition floor, ceiling, and roof opening as follows:
a. Install sleeve through opening and extending beyond minimum of 1 inch on both sides of building element.
b. Size sleeve allowing minimum of 1 inch void between sleeve and building element.
c. Install type of firestopping material recommended by manufacturer.
2. Install escutcheons, floor plates or ceiling plates where piping, penetrates non-fire rated surfaces in occupied spaces. Occupied spaces include rooms with finished ceilings and where penetration occurs below finished ceiling.
3. Exterior wall openings below grade: Assemble rubber links of mechanical sealing device to size of piping and tighten in place, in accordance with manufacturer's instructions.
4. Interior partitions: Seal pipe penetrations at computer rooms, telecommunication rooms and data rooms. Apply sealant to both sides of penetration to completely fill annular space between sleeve and conduit

3.11 FIELD QUALITY CONTROL

A. Division 01 - Execution and Closeout Requirements: Field inspecting, testing, adjusting, and balancing.

B. Inspect installed firestopping for compliance with specifications and submitted schedule.

3.12 CLEANING

A. Division 01 - Execution and Closeout Requirements: Requirements for cleaning.

B. Clean adjacent surfaces of firestopping materials.

END OF SECTION

SECTION 220553

PIPE AND VALVE IDENTIFICATION

PART 1 GENERAL

1.01 REFERENCES

A. ANSI A13.1 - Scheme for Identification of Piping Systems.

1.02 SUBMITTALS

A. Product Data: Catalog sheets, specifications and installation instructions for each item specified.

PART 2 PRODUCTS

2.01 ACCEPTABLE MANUFACTURERS

A. W.H. Brady Co., Milwaukee, WI.

B. Emed Co., Buffalo, NY.

C. Panduit Corp., Tinley Park, IL.

D. Seton Nameplate Corp., New Haven, CT.

2.02 PIPE MARKERS AND ACCESSORIES

A. Snap-on Marker: One piece wrap around type constructed of pre-coiled acrylic plastic with clear polyester coating, integral flow arrows, legend printed in alternating directions, 3/4 inch adhesive strip on inside edge, and 360 degree visibility.

B. Strap-On Marker: Strip type constructed of pre-coiled acrylic plastic with clear polyester coating, integral flow arrows, legend printed in alternating directions, factory applied grommets, and pair of stainless steel spring fasteners.

C. Stick-On Marker: Pressure sensitive adhesive backed type constructed of vinyl with clear polyester coating, and integral flow arrows for applications where flow arrow banding tape is not being used.

D. Pipe Marker Legend and Color Field Sizes:

OUTSIDE DIAMETER OF PIPE OR INSULATION (Inches)	LETTER SIZE (Inches)	LENGTH OF COLOR FIELD (Inches)
3/4 to 1-1/4	1/2	8
1-1/2 to 2	3/4	8
2-1/2 to 6	1-1/4	12

E. Banding Tapes: Pressure sensitive adhesive backed type constructed of vinyl with clear polyester coating.

1. Plain Tape: Unprinted type; color to match pipe marker background.

2. Flow Arrow Tape: Printed type with integral flow arrows; color to match pipe marker background.

F. Pipe Size Labels: Pressure sensitive adhesive backed type constructed of vinyl with clear polyester coating, vertical reading pipe size in inches, and legend size matching adjacent pipe marker.

2.03 PIPE SERVICE IDENTIFICATION TAGS

A. Type: No. 19 B & S gage brass, with 1/4 inch high pipe service abbreviated legend on one line, over 1/2 inch high pipe size legend in inches, both deep stamped and black filled; and 3/16 inch top hole for fastener.

B. Size: 2 inch square tag.

C. Fasteners: Brass “S” hook or brass jack chain of size as required for pipe to which tag is attached.

2.04 VALVE SERVICE IDENTIFICATION TAGS

A. Type: No. 19 B & S gage brass, with 1/4 inch high valve service abbreviated lettering on one line over 1/2 inch high valve service chart number, both deep stamped and black filled; and with 3/16 inch top hole for fastener.

B. Sizes:

1. Plumbing Use: 1-1/2 inch hexagon.

C. Fasteners: Brass “S” hook or brass jack chain of size as required for valve stem or handle to which tag is attached.

2.05 VALVE SERVICE IDENTIFICATION CHART FRAMES

A. Type: Satin finished extruded aluminum frame with rigid clear plastic glazing, size to fit 8-1/2 x 11 inches valve chart.

PART 3 EXECUTION

3.01 PREPARATION

A. Complete testing, insulation and finish painting work prior to completing the Work of this Section.

B. Clean pipe surfaces with cleaning solvents prior to installing piping identification.

C. Remove dust from insulation surfaces with clean cloths prior to installing piping identification.

3.02 INSTALLATION

A. Install the Work of this Section in accordance with the manufacturer's printed installation instructions, unless otherwise specified.

B. Stick-On Pipe Markers:

1. Install minimum of 2 markers at each specified location, 90 degrees apart on visible side of pipe.

2. Encircle ends of pipe markers around pipe or insulation with banding tape with one inch lap. Use plain banding tape on markers with integral flow arrows, and flow arrow banding tape on markers without integral flow arrows.

C. Pipe Size Labels: Install labels adjacent to each pipe marker and upstream from flow arrow. Install a minimum of 2 pipe size labels at each specified location, 90 degrees apart on visible side of pipe.

D. Pipe Service Identification Tags: Attach tags to piping being identified with "S" hooks or jack chains.

3.03 PIPING IDENTIFICATION SCHEDULE

A. Piping Identification Types:

1. Piping or Insulation under 3/4 inch od: Pipe identification tags.

2. Piping or Insulation 3/4 inch to 5-7/8 inch od: Snap-on marker or stick-on marker.

3. Piping or Insulation 6 inch od and Larger: Strap-on marker or stick-on marker.

B. Identify exposed piping, bare or insulated, as to content, size of pipe and direction of flow, with the following exceptions:

1. Piping in non-walk-in tunnels or underground conduits between manholes.

2. Piping in furred spaces or suspended ceilings, except at valve access panels where valves and piping shall be identified as specified for exposed piping systems.

3. Piping in finished spaces such as offices, class rooms, wards, toilet rooms, shower rooms and spaces as specified.

C. Locate piping identification to be visible from exposed points of observation.

1. Locate piping identification at valve locations; at points where piping enters and leaves a partition, wall, floor or ceiling, and at intervals of 20 feet on straight runs.

2. Where 2 or more pipes run in parallel, place printed legend and other markers in same relative location.

3.04 VALVE IDENTIFICATION SCHEDULE

A. Valve Service Identification Tags:

1. Tag control valves, except valves at equipment, with a brass tag fastened to the valve handle or stem, marked to indicate service and numbered in sequence for the following applications:

a. Domestic water valves controlling mains, risers and branch runouts.

b. Gas valves controlling mains, risers, and branch runouts.

c. Valves in sprinkler and fire standpipe systems, except hose valves.

B. Valve Service Identification Charts:

1. Provide 2 framed valve charts for each piping system specified to be provided with valve identification tags. Type charts on 8-1/2 x 11 inches heavy white bond paper, indicating valve number, service and location.
2. Hang framed charts at locations as directed.

END OF SECTION

THIS PAGE INTENTIONALLY LEFT BLANK

SECTION 220576

DRAINAGE ACCESSORIES

PART 1 GENERAL

1.01 REFERENCES

A. Comply with the applicable requirements of ASME A112.36.2M - Cleanouts, and ASME A112.1.2 - Drainage Funnels and Air Gaps.

1.02 SUBMITTALS

A. Product Data: Catalog sheets, specifications, and installation instructions for each item specified except fasteners.

1.03 MAINTENANCE

A. Special Tools: Deliver the following to the Director's Representative:

1. Tools for Vandal Resistant Fasteners: One for each type and size.

2. T-Handle Wrench for Cleanout Plugs: One for each type and size.

PART 2 PRODUCTS

2.01 CLEANOUT PLUG

A. Cast brass or bronze, with threaded end, and raised or countersunk head.

1. Tapped head for attachment of cleanout wall or deck plate covers where required.

B. Anti-Seize Lubricant: Never-Seez by Bostik Chemical Group, Broadview, IL; Molycote 1000 by Dow Corning Corp, Midland, MI; Anti-Seize Lubricant by Loctite Corp, Newington, CT.

2.02 CLEANOUT

A. Threaded pipe fitting or cast iron ferrule with gas tight cleanout plug.

2.03 CLEANOUT WALL PLATE

A. Round, stainless steel or polished chrome plated bronze cover plate with stainless steel vandal resistant fastener to secure to cleanout plug.

2.04 CLEANOUT DECK PLATE

A. Standard duty floor cleanout fitting with coated cast iron body; round, polished nickel bronze scoriated top secured to cleanout plug with stainless steel vandal resistant fastener; threaded height adjustment, cast iron head, gas tight cleanout plug, and connection to match piping option selected.

B. Membrane flange and clamping collar, secured with corrosion resistant fasteners.

2.05 CONDUCTOR EXPANSION JOINT

A. Coated cast iron body with brass telescoping sleeve, adjustable packing gland with graphite, neoprene or mineral fiber gasket, and connection to match piping option selected.

2.06 AIR GAP FITTING

A. Coated cast iron body with air gaps, set screw or threaded inlet, and outlet connection to match piping option selected.

2.07 INDIRECT WASTE FUNNEL

A. Combination Funnel Drain and P Trap: Polished chrome plated cast brass construction.

1. Funnel: 4 inch top dia., 4 inches deep, with threaded outlet.

2. P Trap: Bottom cleanout, threaded inlet, and outlet connection to match piping option selected.

2.08 FASTENERS

A. Corrosion Resistant Fasteners: Brass, bronze, or Type 302 or 304 stainless steel bolts.

B. Vandal Resistant Fasteners: Torx head with center pin.

PART 3 EXECUTION

3.01 INSTALLATION

A. Install the Work of this section in accordance with the manufacturer's printed installation instructions, unless otherwise specified.

B. Cleanout Plug: Lubricate threads with anti-seize lubricant before final installation.

C. Secure external components in place with vandal resistant fasteners or devices which cannot be removed without special tools.

END OF SECTION

THIS PAGE INTENTIONALLY LEFT BLANK

SECTION 220577

FLOOR AND AREA DRAINS

PART 1 GENERAL

1.01 REFERENCES

A. Unless otherwise specified, the Work of this section shall meet the applicable requirements of FS WW-P-541 - Plumbing Fixtures, and ASME A112.21.1M - Floor Drains.

1.02 SUBMITTALS

A. Product Data: Catalog sheets, specifications and installation instructions for each type drain specified.

1.03 MAINTENANCE

A. Special Tools: Deliver to the Director's Representative.

1. Tools for Vandal Resistant Fasteners: One for each type and size.

PART 2 PRODUCTS

2.01 TYPE A FLOOR DRAIN

A. Drain Body: Coated cast iron, two-piece body with reversible flashing clamp, minimum 9 inch dia drainage flange, corrosion resistant bolts, weep holes, bottom outlet, and connection to match piping option selected.

B. Strainer Head: Round, minimum 7 inch dia, nickel bronze with threaded shank for height adjustment.

C. Strainer Grate: Polished nickel bronze, heel proof; secured with stainless steel vandal resistant fasteners.

D. Acceptable Drain Series: Josam 30000A, Smith 2010A, Wade W1100, and Zurn Z415.

2.02 FASTENERS

A. Corrosion Resistant Fasteners: Brass, bronze, or Type 302 or 304 or stainless steel bolts.

B. Vandal Resistant Fasteners: Torx head with center pin.

2.03 FREE AREA OF GRATE

A. Minimum strainer grate free area listed below for each connecting pipe size:

CONNECTING PIPE SIZE (Inches Nominal)	INTERIOR DRAINS FREE AREA (Square Inches)	EXTERIOR DRAINS FREE AREA (Square Inches)
1-1/2	3.06	4.08
2	4.71	6.28
3	10.59	14.12
4	18.90	25.20
5	29.40	39.20
6	42.45	56.60
8	75.38	100.50

PART 3 EXECUTION

3.01 INSTALLATION

A. Install the Work of this section in accordance with the manufacturer's printed installation instructions, unless otherwise specified.

B. Protect weep holes from plugging during installation. Rod out weep holes after installation to remove obstructions.

C. Adjust strainer head to height indicated. If height not indicated, set at 1/2 inch below finished floor elevation.

D. Secure external components in place with vandal resistant fasteners or devices which cannot be removed without special tools.

END OF SECTION

THIS PAGE INTENTIONALLY LEFT BLANK

SECTION 220700

PIPING INSULATION

PART 1 GENERAL

1.01 RELATED WORK SPECIFIED ELSEWHERE

A. Through Penetration Firestops: Section 078400.

B. Painting: Section 099103.

C. Pipe Hangers and Supports: Section 220529.

1.02 ABBREVIATIONS

A. FS: Federal Specification.

B. K: Thermal Conductivity, i.e., maximum Btu per inch thickness per hour per square foot.

C. pcf: Pounds per cubic foot.

D. PVC: Polyvinylchloride.

1.03 SUBMITTALS

A. Product Data: Manufacturer's catalog sheets, specifications and installation instructions for the following:
   1. Insulation Materials.
   2. Jacket Materials.

B. Quality Control Submittals:
   1. Installers Qualification Data:
      a. Name of each person who will be performing the Work, and their employer's name, business address and telephone number.
      b. Furnish names and addresses of the required number of similar projects that each person has worked on which meet the qualifications.

1.04 QUALITY ASSURANCE

A. Qualifications: The persons installing the Work of this Section and their Supervisor shall be personally experienced in mechanical insulation work and shall have been regularly employed by a company installing mechanical insulation for a minimum of 5 years.

B. Regulatory Requirements:

1. Insulation installed inside buildings, including laminated jackets, mastics, sealants and adhesives shall have a Fire Spread/Smoke Developed Rating of 25/50 or less based on ASTM E 84.

PART 2 PRODUCTS

2.01 PIPING INSULATION

A. Fibrous Glass (Mineral Fiber) Insulation: Composed principally of fibers manufactured from rock, slag, or glass, with or without binders, and asbestos free.
   1. Preformed Pipe Insulation: Minimum density 3 pcf; ASTM C 547:
      a. Class 1 (Suitable for Temperatures Up to 450 degrees F): K of 0.26 at 75 degrees F.
   2. Premolded Fitting Insulation: Minimum density 4.0 pcf, K of 0.26 at 75 degrees F; ASTM C 547, Class 1.
   3. Insulation Inserts for PVC Fitting Jackets: Minimum density 1.5 pcf, K of 0.28 at 75 degrees F; ASTM C 553, Type III.
      a. Suitable for temperatures up to 450 degrees F.

B. Flexible Elastomeric Foam Insulation:
   1. FM tested and approved, meeting the following:
      a. Maximum Water Vapor Transmission: 0.10 perm - inch based on ASTM E 96, Procedure A.
      b. K of 0.27 at 75 degrees F based on ASTM C 518 or C 177.
      c. Fire Spread/Smoke Developed Rating: 25/50 or less based on ASTM E 84.
   2. Pipe Insulation: ASTM C 534, Type I.
   3. Polyethylene and polyolefin insulation is not acceptable.

C. High Density Jacketed Insulation Inserts for Hangers and Supports:
   1. For Use with Fibrous Glass Insulation:
      a. Cold Service Piping:
         1) Polyurethane Foam: Minimum density 4 pcf, K of 0.13 at 75 degrees F, minimum compressive strength of 125 psi.
      b. Hot Service Piping:
         1) Calcium Silicate: Minimum density 15 pcf, K of 0.50 at 300 degrees F; ASTM C 533.
         2) Perlite: Minimum density 12 pcf, K of 0.60 at 300 degrees F; ASTM C 610.
   2. For Use with Flexible Elastomeric Foam Insulation: Hardwood dowels and blocks, length or thickness equal to insulation thickness, other dimensions as specified or required.

D. Cements:
   1. Fibrous Glass Thermal Insulating Cement: Asbestos free; ASTM C 195.
   2. Fibrous Glass Hydraulic Setting Thermal Insulating and Finishing Cement: ASTM C 449/C 449M.

2.02 INSULATION JACKETS

A. Laminated Vapor Barrier Jackets for Piping: Factory applied by insulation manufacturer, conforming to ASTM C 1136, Type I.
   1. Type I: Reinforced white kraft and aluminum foil laminate with kraft facing out.
      a. Pipe Jackets: Furnished with integral 1-1/2 inch self sealing longitudinal lap, and separate 3 inch wide adhesive backed butt strips.
   2. Laminated vapor barrier jackets are not required for flexible elastomeric foam insulation.

B. Canvas Jackets: Cotton duck, fire retardant, complying with NFPA 701, 4 oz or 6 oz per sq yd as specified.

C. Premolded PVC Fitting Jackets:
   1. Constructed of high impact, UV resistant PVC.
      a. ASTM D 1784, Class 14253-C.
      b. Working Temperature: 0-150 degrees F.

D. Metal Jacketing:
   1. Aluminum: ASTM B 209, Alloys 1100, 30003, 3105 or 5005, Temper H14, 0.016 inch thick.
      a. Factory Pre-formed Sectional Pipe Jacketing:
         1) Smooth outer finish with integral bonded laminated polyethylene film - kraft paper moisture barrier underside.
         2) Pittsburgh or modified Pittsburgh longitudinal lock seams.
         3) 2 inch overlapping circumferential joints with integral locking clips, or butt joints sealed with 2 inch wide mastic backed aluminum snap bands.
      b. Fastening Devices:
         1) Strapping: Type 18-8 stainless steel, 0.020 inch thick, 1/2 and 3/4 inch wide as specified.
         2) Wing Seals: Type 18-8 stainless steel, 0.032 inch thick.
         3) Sheet Metal Screws: Panhead, Type A, hardened aluminum, and stainless steel.

2.03 ADHESIVES, MASTICS, AND SEALERS

A. Lagging Adhesive (Canvas Jackets): Childers' CP-50AMV1, Epolux's Cadalag 336, Foster's 30-36.

B. Vapor Lap Seal Adhesive (Fibrous Glass Insulation): Childers' CP-82, Epolux's Cadoprene 400, Foster's 85-60 or 85-20.

C. Vapor Barrier Mastic(Fibrous Glass Insulation): Permeance shall be .03 perms or less at 45 mils dry per ASTM E 96. Childers' CP-34, Epolux's Cadalar 670, Foster's 30-65.

D. Adhesive (Flexible Elastomeric Foam): Armstrong's 520, Childers' CP-82, Epolux's Cadoprene 488, Foster's 85-75. 5 gallon cans only

E. Adhesive (Fiberglass Duct Liner): Childers' Chil Quick CP-127, Foster Vapor Fas 85-60. Must comply with ASTM C 916, Type II

.

F. Weather Barrier Breather Mastic (Reinforcing Membrane): Childers' VI-CRYL CP-10/11, Foster's Weatherite 46-50.

G. Sealant (Metal Pipe Jacket): Non hardening elastomeric sealants. Foster Elastolar 95-44, Childers Chil Byl CP-76, Pittsburgh Corning 727

H. Reinforcing Membrane: Childers' Chil Glas #10, Foster Mast a Fab, Pittsburgh Corning PC 79

2.04 MISCELLANEOUS MATERIALS

A. Pressure Sensitive Tape for Sealing Laminated Jackets:
1. Acceptable Manufacturers: Alpha Associates, Ideal Tape, Morgan Adhesive.
2. Type: Same construction as jacket.

B. Wire, Bands, and Wire Mesh:
1. Binding and Lacing Wire: Nickel copper alloy or copper clad steel, gage as specified.
2. Bands: Galvanized steel, 1/2 inch wide x 0.015 inch thick, with 0.032 inch thick galvanized wing seals.
3. Wire Mesh: Woven 20 gage steel wire with 1 inch hexagonal openings, galvanized after weaving.

C. Reinforcing Membrane: Glass or Polyester, 10 x 10 mesh. Alpha Associates Style 59, Childer's Chil-Glas, Foster's MAST-A-FAB.

PART 3 EXECUTION

3.01 PREPARATION

A. Perform the following before starting insulation Work:
1. Install hangers, supports and appurtenances in their permanent locations.
2. Complete testing of piping.
3. Clean and dry surfaces to be insulated.

3.02 INSTALLATION, GENERAL

A. Install the Work of this Section in accordance with the manufacturer's printed installation instructions unless otherwise specified.

B. Provide continuous piping insulation and jacketing when passing thru interior wall, floor, and ceiling construction.
   1. At Through Penetration Firestops: Coordinate insulation densities with the requirements of approved firestop system being installed. See Section 078400.
      a. Insulation densities required by approved firestop system may vary with the densities specified in this Section. When this occurs use the higher density insulation.

C. Do not intermix different insulation materials on individual runs of piping.

3.03 INSTALLATION AT HANGERS AND SUPPORTS

A. Reset and realign hangers and supports if they are displaced while installing insulation.

B. Install high density jacketed insulation inserts at hangers and supports for insulated piping.

C. Insulation Inserts For Use with Fibrous Glass Insulation:
   1. Where clevis hangers are used, install insulation shields and high density jacketed insulation inserts between shield and pipe.
      a. Where insulation is subject to compression at points over 180 degrees apart, e.g. riser clamps, U-bolts, trapezes, etc.; fully encircle pipe with 2 protection shields and 2 high density jacketed fibrous glass insulation inserts within supporting members.
         1) Exception: Locations where pipe covering protection saddles are specified for hot service piping, 6 inch and larger.

D. Insulation Inserts For Use with Flexible Elastomeric Foam Insulation:
   1. Where clevis hangers are used, install insulation shields with hardwood filler pieces, same thickness as adjoining insulation, inserted in undersized die cut or slotted holes in insulation at support points.
   2. Contour hardwood blocks to match the curvature of pipe, and shield.
   3. Coat dowels and blocks with insulation adhesive, and insert while still wet.
   4. Vapor seal outer surfaces of dowels and blocks with adhesive after insertion.
   5. Install filler pieces as follows:

PIPE/TUBING SIZE	FILLER PIECES	POSITION
Thru 1-1/2"	2 dowel plugs	6 o'clock; in tandem
2" thru 4"	1 block, 2 dowel plugs	6 o'clock, and 4 & 8 o'clock respectively

3.04 INSTALLATION OF FIBROUS GLASS COLD SERVICE INSULATION

A. Install insulation materials with a field or factory applied ASTM C 1136 Type I laminated vapor barrier jacket, unless otherwise specified.

B. Piping:
1. Butt insulation joints together, continuously seal minimum 1-1/2 inch wide self-sealing longitudinal jacket laps and 3-inch wide butt adhesive backed strips.
   a. Substitution: 3 inch wide pressure sensitive sealing tape, of same material as jacket, may be used in lieu of butt strips.
2. Bed insulation in a 2-inch wide band of vapor barrier mastic, and vapor seal exposed ends of insulation with vapor barrier mastic at each butt joint between pipe insulation and equipment, fittings or flanges at the following intervals:
   a. Horizontal Pipe Runs: 21 ft.
   b. Vertical Pipe Runs: 9 ft.

C. Fittings, Valves, Flanges and Irregular Surfaces:
1. Insulate with mitre cut or premolded fitting insulation of same material and thickness as pipe insulation.
2. Secure insulation in place with 16-gage wire, with ends twisted and turned down into insulation.
3. Butt insulation against pipe insulation and bond with joint sealer.
4. Insulate valves up to and including bonnets, without interfering with packing nuts.
5. Apply leveling coat of insulating cement to smooth out insulation and cover wiring.
6. When insulating cement has dried, seal fitting, valve and flange insulation, by imbedding a layer of reinforcing membrane or 4 oz. canvas jacket between 2 flood coats of vapor barrier mastic, each 1/8 inch thick wet.
7. Lap reinforcing membrane or canvas on itself and adjoining pipe insulation at least 2 inches.
8. Trowel, brush or rubber glove outside coat over entire insulated surface.
9. Exceptions:
   a. Type C and D Piping Systems: Valves, fittings and flanges may be insulated with premolded PVC fitting jackets, with fibrous glass insulation inserts.
      1) Additional insulation inserts are required for services with operating temperatures under 45 degrees F or where insulation thickness exceeds 1-1/2 inches. The surface temperature of PVC fitting jacket must not go below 45 degrees F.

3.05 INSTALLATION OF FIBROUS GLASS HOT SERVICE INSULATION

A. Install insulation materials with field or factory applied ASTM C 1136 Type I laminated vapor barrier jacket unless otherwise specified.

B. Canvas Jackets on Piping, Fittings, Valves, Flanges, Unions, and Irregular Surfaces:
   1. For Piping 2 inch Size and Smaller: 4 oz per sq yd unless otherwise specified.
   2. For Piping Over 2 inch Size: 6 oz per sq yd unless otherwise specified.

C. Piping:
   1. Butt insulation joints together, continuously seal minimum 1-1/2 inch wide self-sealing longitudinal jacket laps and 3-inch wide adhesive backed butt strips.
      a. Substitution: 3 inch wide pressure sensitive sealing tape, of same material as the jacket, may be used in lieu of butt strips.
   2. Fill voids in insulation at hanger with insulating cement.
   3. Exceptions:
      a. Piping in Accessible Shafts, Attic Spaces, Crawl Spaces, Unfinished Spaces and Concealed Piping: Butt insulation joints together and secure minimum 1-1/2 inch wide longitudinal jacket laps and 3 inch wide butt strips of same material as jacket, with outward clinching staples on maximum 4 inch centers. Fill voids in insulation at hangers with insulating cement.

D. Fittings, Valves, Flanges and Irregular Surfaces:
   1. Insulate with mitre cut or premolded fitting insulation of same material and thickness as insulation.
   2. Secure in place with 16-gage wire, with ends twisted and turned down into insulation.
   3. Butt fitting, valve and flange insulation against pipe insulation, and fill voids with insulating cement.
   4. Insulate valves up to and including bonnets, without interfering with packing nuts.
   5. Apply leveling coat of insulating cement to smooth out insulation and cover wiring.
   6. After insulating cement has dried, coat insulated surface with lagging adhesive, and apply 4 oz or 6 oz canvas jacket as required by pipe size.
      a. Lap canvas jacket on itself and adjoining pipe insulation at least 2 inches.
      b. Size entire canvas jacket with lagging adhesive.
   7. Exceptions:
      a. In Types E, and F Service Piping Systems: Valves, fittings and flanges may be insulated with premolded PVC fitting jackets, with fibrous glass insulation inserts.
         1) Additional insulation inserts are required for services with operating temperatures over 250 degrees F or where insulation thickness exceeds 1-1/2 inches. The surface temperature of PVC fitting jacket must not exceed 150 degrees F.
      b. In Types E, and F Service Piping Systems: Insulate fittings, valves, and irregular surfaces 3 inch size and smaller with insulating cement covered with 4 oz or 6 oz canvas jacket as required by pipe size.

1) Terminate pipe insulation adjacent to flanges and unions with insulating cement, trowelled down to pipe on a bevel.

c. Fittings, Valves, Flanges, and Irregular Surfaces In Concealed Piping, Piping in Accessible Shafts, Attic Spaces, Crawl Spaces, Unfinished Rooms, Unfinished Spaces, and Tunnels: Sizing of canvas surface is not required.

3.06 INSTALLATION OF FLEXIBLE ELASTOMERIC FOAM INSULATION

A. Where possible, slip insulation over the pipe, and seal butt joints with adhesive.
1. Where the slip-on technique is not possible, slit the insulation and install.
2. Re-seal with adhesive, making sure the mating surfaces are completely joined.

B. Insulate fittings and valves with miter cut sections. Use templates provided by the manufacturer, and assemble the cut sections in accordance with the manufacturer's printed instructions.
1. Insulate threaded fittings and valves with sleeved fitting covers. Over lap and seal the covers to the adjoining pipe insulation with adhesive.

C. Carefully mate and seal with adhesive all contact surfaces to maintain the integrity of the vapor barrier of the system.

D. Piping Exposed Exterior to a Building, Totally Exposed to the Elements:
1. Apply flexible elastomeric foam insulation to piping with adhesive.
2. Apply reinforcing membrane around piping insulation with adhesive or mastic.
3. Adhesive Applied System: Apply 2 coats of finish. See Section 099103.
4. Mastic Applied System: Apply another coat of mastic over reinforcing membrane.

3.07 INSTALLATION OF SHEET METAL JACKETING ON PIPING

A. Secure jacketing to insulated piping with preformed aluminum snap straps and stainless steel strapping installed with special banding wrench.

B. Jacket exposed insulated fittings, valves and flanges with mitred sections of aluminum jacketing.
1. Seal joints with sealant and secure with preformed aluminum bands.
3. Substitution: Factory fabricated, preformed, sectional aluminum fitting covers or premolded polyvinylchloride fitting covers may be used in lieu of mitred sections of aluminum jacketing for covering fittings, valves and flanges.

3.08 FIELD QUALITY CONTROL

A. Field Samples: The Director's Representative, may at his discretion, take field samples of installed insulation for the purpose of checking materials and application. Reinsulate sample cut areas.

3.09 PIPING INSULATION SCHEDULE

A. Insulate all cold service and hot service piping, and appurtenances except where otherwise specified.

B. Schedule of Items Not to be Insulated:
1. Chrome plated piping, unless otherwise specified.
2. Exposed piping in finished spaces, serving one fixture, or piece of equipment, and which connection from the main, branch, or riser, is 24 inches or less in length.
3. Water heater blow-off piping.
4. Air vents, pressure reducing valves, pilot lines, safety valves, relief valves.
5. Water meters.
6. Piping buried in the ground, unless otherwise specified herein.
7. Items installed by others, unless otherwise specified herein.
8. Sanitary drainage piping, unless otherwise specified herein.
9. Mechanical equipment with factory applied steel jacket.
10. Hot service piping 81 degrees F to 104 degrees F.
11. Flanges and unions in Type E, F, and G service piping systems.
12. Sprinkler and standpipe piping, unless otherwise specified.

3.10 COLD SERVICE INSULATION MATERIAL SCHEDULE

TYPE	SERVICE AND TEMPERATURES	INSULATION MATERIAL	PIPE SIZES (INCHES)	MINIMUM (NOMINAL) INSULATION THICKNESS (INCHES)
C	Fluids (except domestic cold water) 40 F to 80 F.	Flex. Elastomeric Foam or Fibrous Glass	1-1/2 & less Over 1-1/2	1 1-1/2
D	Domestic cold water, and as specified. 33 F to 80 F.	Flex. Elastomeric Foam or Fibrous Glass	All Sizes	1/2

A. NOTES:
1. Sprinkler and Standpipe Piping (First 10 feet connected to domestic water main within building): Insulate with same materials and thicknesses specified for domestic cold water.
3. Piping Serving Handicapped Accessible Lavatories:
   a. Insulate exposed hot water supply and waste piping with flexible elastomeric foam pipe insulation.
   b. Insulate exposed hot and cold water supply, and waste piping with under lav piping protection cover. Install fasteners thru each pair of holes in insulated safety wrap.

3.11 HOT SERVICE INSULATION MATERIAL SCHEDULE

	SERVICE AND TEMPERATURES	INSULATION MATERIAL	PIPE SIZES (INCHES)	MINIMUM (NOMINAL) INSULATION THICKNESS (INCHES)
E	Water and other fluids 105 F to140 F.	Flex. Elastomeric Foam or Fibrous Glass	1-1/2 & Less Over 1-1/2	1 2

3.12 SCHEDULE OF METAL JACKETING FOR INSULATED PIPE

C. General:
1. Jacket exposed insulated piping with preformed sectional aluminum metal pipe jacketing.

END OF SECTION

SECTION 220800

CLEANING AND TESTING

PART 1 GENERAL

1.01 RELATED WORK SPECIFIED ELSEWHERE

A. Testing Sprinkler System: NFPA-13.

1.02 SUBMITTALS

A. Quality Control Submittals
1. Test Reports (Field Tests): Submit data for each system tested, and/or disinfected; include date performed, description, and test results for each system.

1.03 QUALITY ASSURANCE

A. Regulatory Requirements:
1. Perform factory testing of factory fabricated equipment in complete accordance with the agencies having jurisdiction.
2. Perform field testing of piping systems in complete accordance with the local utilities and other agencies having jurisdiction and as specified.

1.04 PROJECT CONDITIONS

A. Protection: During test Work, protect controls, gages and accessories which are not designed to withstand test pressures. Do not utilize permanently installed gages for field testing of systems.

1.05 SEQUENCING AND SCHEDULING

A. Transmit written notification of proposed date and time of operational tests to the Director's Representative at least 5 days in advance of such tests.

B. Perform cleaning and testing Work in the presence of the Director's Representative.

C. Pressure test piping systems inside buildings, at the roughing-in stage of installation, before piping is enclosed by construction Work, and at other times as directed. Perform test operations in sections as required and directed, to progress the Work in a satisfactory manner and not delay the general construction of the building. Valve or cap-off sections of piping to be tested, utilizing valves required to be installed in the permanent piping systems, or temporary valves or caps as required to perform the Work.

PART 2 PRODUCTS

2.01 MATERIALS

A. Test Equipment and Instruments: Type and kind as required for the particular system under test.

B. Test Media (air, vacuum, water): As specified for the particular piping or system under test.

C. Cleaning Agent (water): As specified for the particular piping, apparatus or system being cleaned.

PART 3 EXECUTION

3.01 PRELIMINARY WORK

A. Thoroughly clean pipe and tubing prior to installation. During installation, prevent foreign matter from entering systems. Prevent if possible and remove stoppages or obstructions from piping and systems.

3.02 PRESSURE TESTS - PIPING

A. Piping shall be tight under test and shall not show loss in pressure or visible leaks, during test operations or after the minimum duration of time as specified. Remove piping which is not tight under test; remake joints and repeat test until no leaks occur.

B. Water Systems:
1. Domestic water (potable cold, domestic hot and recirculation) inside buildings:
   a. Before fixtures, faucets, trim and accessories are connected, perform hydrostatic test at 125 psig minimum for 4 hours.
   b. After fixtures, faucets, trim and accessories are connected, perform hydrostatic retest at 75 psig for 4 hours.

C. Gas Piping: Before backfilling or concealment perform air test of duration and pressure as required by the local gas company. However, for gas piping designed for pressures of from 4 inches to 6 inches water column, air test at 15 inches Hg for one hour, without drop in pressure. Test gas piping with air only. Check joints for leaks with soap suds.

D. Air Piping:
1. Compressed Air: Test with air at 150 psig for one hour.
2. Check joints for leaks with soap suds.

E. Drainage, Vent, Conductor and Roof Drain Piping (Inside Buildings): Perform tests before fixtures are installed. Test by filling the entire system with water,

and allowing to stand for 3 hours, with no noticeable loss of water. Test joints under a minimum head of 10 feet of water, except the uppermost section. Test the uppermost section to overflowing.

3.03 TESTING OF EQUIPMENT, APPARATUS AND APPURTENANCES

A. Relief Valves: Increase pressure in equipment or apparatus to relief valve setting, to test opening of valves at required relief pressures.

3.04 DISINFECTION OF POTABLE WATER SYSTEMS

A. Disinfect potable water pipe and equipment installed in the Work of this Contract.
   1. Refer to Specification Section 221100, Paragraph 3.6 for cleaning and disinfection procedure.
   2. After the retention period, discharge the solution to an approved waste and flush the system thoroughly with water until substantially all traces of chlorine are removed. Drain and flush water storage equipment if installed.

B. Connect plumbing fixtures and equipment and place the system into service. Prevent recontamination of the piping during this phase of the Work.

3.05 LEAD TESTING

A. Engage the services of an independent testing service to test the school's drinking water for lead contaminates in accordance with the Public Health Law Sections 1370-a and 1110, Subpart 67-4, Title 10 (HEALTH) of the official compilation of codes, rules and regulations of the State of New York.

END OF SECTION

THIS PAGE INTENTIONALLY LEFT BLANK

SECTION 22 10 23
FACILITY NATURAL-GAS PIPING

PART 1 GENERAL

1.1 SUMMARY

A. Section Includes:
1. Natural gas piping above grade.
2. Unions and flanges.
3. Valves.
4. Pipe hangers and supports.
5. Strainers.
6. Master Gas Control Valve

B. Related Sections:
1. Section 07 84 00 - Firestopping: Product requirements for firestopping for placement by this section.
2. Section 08 31 13 - Access Doors and Frames: Access doors for concealed valves and accessories.
3. Section 09 90 00 - Painting and Coating: Product requirements for painting for placement by this section.
4. Section 22 05 23 - General-Duty Valves for Plumbing Piping: Valves for gas piping systems.
5. Section 22 05 29 - Hangers and Supports for Plumbing Piping and Equipment: Product requirements for pipe hangers and supports and firestopping for placement by this section.
6. Section 22 05 53 - Identification for Plumbing Piping and Equipment: Product requirements for valve and pipe identification for placement by this section.
7. Section 23 05 03 - Pipes and Tubes for HVAC Piping and Equipment: Piping materials for gas piping systems.

1.2 REFERENCES

A. American National Standards Institute:
1. ANSI Z21.15 - Manually Operated Gas Valves for Appliances, Appliance Connector Valves and Hose End Valves.

B. American Society of Mechanical Engineers:
1. ASME B16.3 - Malleable Iron Threaded Fittings.
2. ASME B16.26 - Cast Copper Alloy Fittings for Flared Copper Tubes.
3. ASME B16.33 - Manually Operated Metallic Gas Valves for Use in Gas Piping Systems Up to 125 psig (sizes 1/2 - 2).
4. ASME B31.9 - Building Services Piping.
5. ASME Section IX - Boiler and Pressure Vessel Code - Welding and Brazing Qualifications.

C. ASTM International:
1. ASTM A53/A53M - Standard Specification for Pipe, Steel, Black and Hot-Dipped, Zinc-Coated, Welded and Seamless.
2. ASTM A234/A234M - Standard Specification for Piping Fittings of Wrought Carbon Steel and Alloy Steel for Moderate and High Temperature Service.
3. ASTM B88 - Standard Specification for Seamless Copper Water Tube.

4. ASTM B280 - Standard Specification for Seamless Copper Tube for Air Conditioning and Refrigeration Field Service.
5. ASTM B749 - Standard Specification for Lead and Lead Alloy Strip, Sheet, and Plate Products.
6. ASTM F708 - Standard Practice for Design and Installation of Rigid Pipe Hangers.

D. American Welding Society:
1. AWS D1.1 - Structural Welding Code - Steel.

E. American Water Works Association:
1. AWWA C105 - American National Standard for Polyethylene Encasement for Ductile-Iron Pipe Systems.

F. Manufacturers Standardization Society of the Valve and Fittings Industry:
1. MSS SP 58 - Pipe Hangers and Supports - Materials, Design and Manufacturer.
2. MSS SP 69 - Pipe Hangers and Supports - Selection and Application.
3. MSS SP 78 - Cast Iron Plug Valves, Flanged and Threaded Ends.
4. MSS SP 89 - Pipe Hangers and Supports - Fabrication and Installation Practices.

G. National Fire Protection Association:
1. NFPA 54 - National Fuel Gas Code.

H. Underwriters Laboratories Inc.:
1. UL 842 - Valves for Flammable Fluids.

1.3 SYSTEM DESCRIPTION

A. Where more than one piping system material is specified, provide compatible system components and joints. Use non-conducting dielectric connections when joining dissimilar metals in systems.

B. Provide flanges, unions, or couplings at locations requiring servicing. Use unions, flanges, or couplings downstream of valves and at equipment connections. Do not use direct welded or threaded connections to valves, equipment.

C. Provide pipe hangers and supports in accordance with MSS SP 58, MSS SP 69 and MSS SP 89.

D. Use plug valves for shut-off and to isolate equipment, part of systems, or vertical risers.

1.4 SUBMITTALS

A. Section 01 33 00 - Submittal Procedures: Submittal procedures.

B. Product Data:
1. Piping: Submit data on pipe materials, fittings, and accessories. Submit manufacturers catalog information.
2. Valves: Submit manufacturers catalog information with valve data and ratings for each service.
3. Hangers and Supports: Submit manufacturers catalog information including load capacity.
4. Piping Specialties: Submit manufacturers catalog information including capacity, rough-in requirements, and service sizes for the following:
   a. Strainers.
   b. Natural gas pressure regulators.

C. Design Data: Indicate pipe size. Indicate load carrying capacity of trapeze, multiple pipe, and riser support hangers.

D. Test Reports: Indicate results of piping system pressure test.

E. Manufacturer's Certificate: Certify Products meet or exceed specified requirements.

F. Welders Certificates: Certify welders employed on the Work, verifying AWS qualification within previous 12 months.

1.5 CLOSEOUT SUBMITTALS

A. Section 01 70 00 - Execution and Closeout Requirements: Closeout procedures.

B. Project Record Documents: Record actual locations of valves, piping system and system components.

C. Operation and Maintenance Data: Submit for valve installation instructions and spare parts lists.

1.6 QUALITY ASSURANCE

A. Perform natural gas Work in accordance with NFPA 54.

B. Perform work in accordance with the 2014 NYS-FGC code and local gas company requirements.

C. Perform Work in accordance with ASME B31.9 code for installation of piping systems and ASME Section IX for welding materials and procedures.

D. Perform Work in accordance with NYS-FGC code AWS D1.1 for welding hanger and support attachments to building structure.

E. Furnish shutoff valves complying with ASME B16.33 or ANSI Z21.15.

F. Maintain one (1) copy of each document on site.

1.7 QUALIFICATIONS

A. Manufacturer: Company specializing in manufacturing products specified in this section with minimum three (3) years documented experience.

B. Installer: Company specializing in performing Work of this section with minimum three (3) years documented experience approved by manufacturer.

C. Design piping system, hangers and supports under direct supervision of Professional Engineer experienced in design of this Work and licensed in State of New York.

1.8 PRE-INSTALLATION MEETINGS

A. Section 01 30 00 - Administrative Requirements: Pre-installation meeting.

B. Convene minimum one (1) week prior to commencing work of this section.

1.9 DELIVERY, STORAGE, AND HANDLING

A. Section 01 60 00 - Product Requirements: Product storage and handling requirements.

B. Accept valves on site in shipping containers with labeling in place. Inspect for damage.

C. Protect piping and fittings from soil and debris with temporary end caps and closures. Maintain in place until installation. Furnish temporary protective coating on cast iron and steel valves.

1.10 ENVIRONMENTAL REQUIREMENTS

A. Section 01 60 00 - Product Requirements.

B. Do not install underground piping when bedding is wet or frozen.

1.11 FIELD MEASUREMENTS

A. Verify field measurements prior to fabrication.

1.12 COORDINATION

A. Section 01 30 00 - Administrative Requirements: Requirements for coordination.

B. Coordinate trenching, excavating, bedding and backfilling of buried piping systems with requirements of Sections listed in 1.1 Summary, Part B of this specification.

1.13 WARRANTY

A. Section 01 70 00 - Execution and Closeout Requirements: Product warranties and product bonds.

B. Furnish five-year manufacturer warranty for valves excluding packing.

1.14 EXTRA MATERIALS

A. Section 01 70 00 - Execution and Closeout Requirements: Spare parts and maintenance products.

B. Furnish two (2) packing kits for each type and size valve.

PART 2 PRODUCTS

2.1 NATURAL GAS PIPING, ABOVE GRADE

A. Steel Pipe: ASTM A53/A53M Schedule 40 black.
   1. Fittings: ASME B16.3, malleable iron, or ASTM A234/A234M forged steel welding type.
   2. Joints: Threaded for pipe 2 inches and smaller; welded for pipe 2-1/2 inches and larger.

B. Corrugated Stainless Steel Tubing: ANSI LC 1.

2.2 REGULATOR AND PRESSURE SWITCH VENT PIPING, ABOVE GRADE

A. Indoors: Same as natural gas piping, above grade.

B. Outdoors: Schedule 40 pipe and fittings, UL 651.

2.3 UNIONS AND FLANGES

A. Unions for Pipe 2 inches and Smaller:
   1. Ferrous Piping: Class 150, malleable iron, threaded.
   2. Copper Piping: Class 150, bronze unions with [soldered] [brazed joints].
   3. Dielectric Connections: Union with galvanized or plated steel threaded end, copper solder end, water impervious isolation barrier.

B. Flanges for Pipe 2-1/2 inches and Larger:
   1. Ferrous Piping: Class 150, forged steel, slip-on flanges.
   2. Copper Piping: Class 150, slip-on bronze flanges.
   3. Gaskets: 1/16 inch thick preformed neoprene gaskets.

2.4 PLUG VALVES

A. Manufacturers:
   1. Lubricated plug valves for use on gas service shall be as approved by the serving utility. Other gas piping system lubricated plug valves shall be Nordstrom Valves, Inc.

B. 2 inches and Smaller: MSS SP 78, cast iron rated for 200 pounds construction, round port, regular opening, pressure lubricated, teflon packing, threaded ends. Furnish one plug valve wrench for every ten plug-valves with minimum of one wrench.

C. 2-1/2 inches and Larger: MSS SP 78, cast iron rated for 200 pounds construction, round port, regular opening, pressure lubricated, teflon packing, flanged ends. Furnish wrench-operated and worm gear-operated.

2.5 GAS COCKS

A. Gas cocks shall be for use only as manual gas shut-off valves at each piece of gas burning equipment; shall be of the plug type, bronze construction with check, nut and washer bottom and tee handle.

B. Gas cocks shall be Fig. 10596 as manufactured by A. Y. McDonald Mfg. Co., or Series 52 as manufactured by Conbraco Industries, Inc.

C. Gas cocks shall only be used on piping 1" and smaller

2.6 PIPE HANGERS AND SUPPORTS

A. Manufacturers:
   1. Carpenter & Patterson, Inc.
   2. Anvil
   3. Witch
   4. Substitutions: Section 01 60 00 - Product Requirements.

B. Conform to [NFPA 54,] [ASME 31.9,] [ASTM F708,] [MSS SP 58,] [MSS SP 69,] [and] [MSS SP 89].

C. Hangers for Pipe Sizes 1/2 to 1-1/2 inch: Carbon steel, adjustable swivel, split ring.

D. Hangers for Pipe Sizes 2 inches and Larger: Carbon steel, adjustable, clevis.

E. Multiple or Trapeze Hangers: Steel channels with welded spacers and hanger rods.

F. Wall Support for Pipe 3 inches and Smaller: Cast iron hook.

G. Vertical Support: Steel riser clamp.

H. Floor Support: Cast iron adjustable pipe saddle, lock nut, nipple, floor flange, and concrete pier or steel support.

I. Sheet Lead: ASTM B749, 2.5 lb/sq ft 0.039 inch thick.

2.7 STRAINERS

A. Manufacturers: Strainers for use on gas service shall be as approved by the serving utility.

B. 2 inches and Smaller: Screwed brass or iron body for 175 psig working pressure, Y pattern with 1/32 inch stainless steel perforated screen.

C. 2-1/2 inches to 4 inches: Flanged iron body for 175 psig working pressure, Y pattern with 3/64 inch stainless steel perforated screen.

D. 5 inches and Larger: Flanged iron body for 175 psig working pressure, basket pattern with 1/8 inch stainless steel perforated screen.

2.8 GAS PRESSURE REGULATORS

A. Manufacturers: Gas regulators for use on gas service shall be as approved by the serving utility.

B. Product Description: Spring loaded, general purpose, self-operating service regulator including internal relief type diaphragm assembly and vent valve. Diaphragm case can be rotated 360 degrees in relation to body.

1. Comply with ANSI Z21.80.
2. Temperatures: minus 20 degrees F to 150 degrees F.
3. Spring case, lower diaphragm casing, union ring, seat ring and disk holder: Aluminum.
4. Disk, diaphragm, and O-ring: Nitrile.
5. Maximum inlet pressure: 150 psig.
6. Furnish sizes 2 inches and smaller with threaded ends. Furnish sizes 2-1/2 inches and larger with flanged ends.

C. Venting of Gas Regulators: If located indoors, gas pressure regulators shall have an independent vent pipe routed to the outside of the building. The vent pipe shall be arranged so as to preclude the entry of water or foreign objects. Separate vent piping is not required if the regulator is less than 1¼”, is equipped with and is labeled for utilization with approved vent-limiting device installed as per the manufacturer’s recommendations.

2.9 MASTER GAS CONTROL VALVE

A. Master Gas Control Valve shall be a packless, explosion-proof solenoid operated valve. The valve shall have screwed aluminum or brass body and renewable composition discs for tight seating. Valve shall be of normally closed construction open when energized, equipped with explosion-proof solenoid approved by Underwriters for Class 1, Group D, hazardous locations. Valves shall be fully automatic (requiring no manual operation to reopen the valve after the valve has shut off the gas supply). The solenoid valve shall be protected by a brass or bronze body strainer with stainless steel screen.

1. For pipes up to and including 2" in size, strainer shall be Automatic Switch Co., Catalog No. 8600, or Muessco No. 351.

2. Valve shall be Automatic Switch Co. (ASCO) Bulletin No. 8215 with continuous duty class H insulation coil for low pressure of the size shown on plan.

B. Solenoid valves shall be designed to operate on 120 volt A.C. circuit. Valve shall be tapped for 3/4" conduit.

C. Valve shall require reset by an authorized person via key switch

D. Relay Panel: Refer to electrical drawings and specifications.

PART 3 **EXECUTION**

3.1 EXAMINATION

A. 01300 - Administrative Requirements: Coordination and project conditions.

B. Verify excavations are to required grade, dry, and not over-excavated.

3.2 PREPARATION

A. Ream pipe and tube ends. Remove burrs. Bevel plain end ferrous pipe.

B. Remove scale and dirt, on inside and outside, before assembly.

C. Prepare piping connections to equipment with flanges or unions.

3.3 INSTALLATION - INSERTS

A. Provide inserts for placement in concrete forms.

B. Provide inserts for suspending hangers from reinforced concrete slabs and sides of reinforced concrete beams.

C. Provide hooked rod to concrete reinforcement section for inserts carrying pipe 4 inches and larger.

D. Where concrete slabs form finished ceiling, locate inserts flush with slab surface.

E. Where inserts are omitted, drill through concrete slab from below and provide through-bolt with recessed square steel plate and nut above recessed into and grouted flush with slab.

3.4 INSTALLATION - PIPE HANGERS AND SUPPORTS

A. Install hangers and supports in accordance with [ASME B31.9] [ASTM F708] [MSS SP 89].

B. Support horizontal piping hangers as scheduled.

C. Install hangers to provide minimum 1/2 inch space between finished covering and adjacent work.

D. Place hangers within 12 inches of each horizontal elbow.

E. Install hangers to allow 1-1/2 inch minimum vertical adjustment. Design hangers for pipe movement without disengagement of supported pipe.

F. Support vertical piping at every other floor. Support riser piping independently of connected horizontal piping.

G. Where installing several pipes in parallel and at same elevation, provide multiple pipe hangers or trapeze hangers.

H. Prime coat exposed steel hangers and supports in accordance with Section 09 90 00. Finish paint exposed steel hangers and supports in accordance with Section 09 90 00. Hangers and supports located in crawl spaces, pipe shafts, and suspended ceiling spaces are not considered exposed.

I. Provide clearance in hangers and from structure and other equipment for installation of insulation and access to valves and fittings.

3.5 INSTALLATION - ABOVE GROUND PIPING SYSTEMS

A. Install natural gas piping in accordance with NFPA 54 and Appendix E of the 2014 NYS-FGC.

B. Provide non-conducting dielectric connections wherever jointing dissimilar metals.

C. Route piping in orderly manner and maintain gradient.

D. Where required, bend pipe with pipe bending tools in accordance with procedures intended for that purpose.

E. Install piping to conserve building space and not interfere with use of space.

F. Size and install gas piping to provide sufficient gas to supply maximum appliance demand at pressure higher than appliance minimum inlet pressure.

G. Group piping whenever practical at common elevations.

H. Install piping to allow for expansion and contraction without stressing pipe, joints, or connected equipment.

I. Sleeve pipe passing through partitions, walls and floors. Refer to Section 23 05 29.

J. Install firestopping at fire rated construction perimeters and openings containing penetrating sleeves and piping. Refer to Section 22 05 29.

K. Provide clearance for installation of insulation and access to valves and fittings.

L. Provide access where valves and fittings are not exposed. Coordinate size and location of access doors with Section 08 31 13.

M. Where pipe support members are welded to structural building framing, scrape, brush clean, weld, and apply one coat of zinc rich primer. Refer to Section 05 12 00 and 05 21 00.

N. Provide support for utility meters in accordance with requirements of utility company.

O. Install vent piping from gas pressure reducing valves to outdoors and terminate in weatherproof hood. Protect vent against entry of insects and foreign material.
   1. Minimum Vent Size: Connection size at regulator vent connection.
   2. Run individual vent line from each relief device, independent of breather vents.

P. Prepare pipe, fittings, supports, and accessories not pre-finished, ready for finish painting. Refer to Section 09 90 00.

Q. Install identification on piping systems including underground piping. Refer to Section 23 05 53.

R. Install valves with stems upright or horizontal, not inverted.

S. Protect piping systems from entry of foreign materials by temporary covers, completing sections of the Work, and isolating parts of completed system.

T. Utility company to provide new gas service complete with gas meter and regulators.

U. Coordinate all required controls, including appropriate voltages for solenoid valve with Electrical Contractor. Provide all devices, wiring and controls for a complete and operational system.

3.6 INSTALLATION OF KITCHEN MASTER GAS CONTROL VALVE

A. Install master gas control valve in location as indicated on Drawings.

B. Install a gas cock (shut-off valve) (tee handle) or lubricated plug valve on each side of solenoid valve and install a by-pass connection with shut off valve so that the solenoid valve may be removed for repairs.

3.7 FIELD QUALITY CONTROL

A. Section 01 40 00 - Quality Requirements and 01 70 00 - Execution and Closeout Requirements: Field inspecting, testing, adjusting, and balancing.

B. Where gas appliance will be damaged by test pressure, disconnect appliance and cap piping during pressure test. Reconnect appliance after pressure test and leak test connection.

C. Where gas appliance is designed for operating pressures equal to piping test pressure, provide gas valve to isolate appliance or equipment from gas test pressure.

D. Pressure test natural gas piping in accordance with NFPA 54.

E. Inspect, test and purge gas piping in accordance with NYS-FGC and local gas company requirements.

F. When pressure tests do not meet specified requirements, remove defective work, replace and retest.

G. Immediately after gas is applied to a new system, or a system has been restored after gas service interruption, check pipe for leakage.
   1. Where leakage is detected, shut off gas supply until necessary repairs are complete.

H. Do not place appliances in service until leak testing and repairs are complete.

3.8 PAINTING

A. Paints and coatings used in the interior of building to mark piping for identification purposes shall not:

   1. Exceed the VOC content limits established in the Green Seal Standard GS-11 Pints, First Edition, May 20, 1993.

2. Exceed the VOC content limit of 250 g/L established in the Green Seal Standard GC-03, Anti-Corrosive Paints, Second Edition, January 7, 1997.

B. All exposed gas pipe shall receive one (1) coat of Tnemec 10-99 or Benjamin Moore Iron Clad Retardo Rust Inhibitive primer paint and one(1) finished coat of safety yellow. Gas vent piping exposed to public view outside the building shall receive one (1) coat of Tnemec 10-99 or Benjamin Moore Iron Clad Retardo Rust Inhibitive primer paint and one coat of finished paint selected by the filing architect.

C. For additional requirements for materials and method of painting, refer to Section 09900 - Painting.

3.9 SCHEDULES

A. Valve Service:

SYSTEM DESCRIPTION	SHUTOFF	THROTTLING	CHECK
Natural Gas Piping			

B. Pipe Hanger Spacing:

PIPE SIZE Inches	STEEL PIPE MAXIMUM HANGER SPACING Feet	STEEL PIPE MINIMUM HANGER ROD DIAMETER Inches
1/2	6	3/8
3/4	7	3/8
1	7	3/8
1-1/4	7	3/8
1-1/2	9	3/8
2	10	3/8
2-1/2	10	1/2
3	10	1/2
4	10	5/8
5	10	5/8
6	10	3/4
8	10	3/4

END OF SECTION

SECTION 221100

DOMESTIC WATER PIPING

PART 1 GENERAL

1.1 SUMMARY

A. Section Includes:

1. Domestic water piping, within 5 feet of building.
2. Domestic water piping, above grade.
3. Unions and flanges.
4. Valves.
5. Strainers.
6. Hose bibs.
7. Hydrants.
8. Backflow preventers.
9. Water hammer arrestors.
10. Thermostatic Mixing Valves.

1.2 REFERENCES

A. American National Standards Institute ANSI.

B. American Society of Mechanical Engineers (ASME).

C. American Society of Sanitary Engineering (ASSE).

D. ASTM International:

E. American Welding Society (AWS).

F. American Water Works Association: (WWA).

G. Manufacturers Standardization Society of the Valve and Fittings Industry (MSS).

H. National Electrical Manufacturers Association (NEMA).

I. Plumbing and Drainage Institute (PDI).

1.3 SUBMITTALS

A. Section 01330 - Submittal Procedures: Submittal procedures.

B. Product Data:

1. Piping: Submit data on pipe materials, fittings, and accessories. Submit manufacturer's catalog information.

2. Valves: Submit manufacturers catalog information with valve data and ratings for each service.

3. Hangers and Supports: Submit manufacturers catalog information including load capacity.

4. Domestic Water Specialties: Submit manufacturers catalog information, component sizes, rough-in requirements, service sizes, and finishes.

5. Pumps: Submit pump type, capacity, certified pump curves showing pump performance characteristics with pump and system operating point plotted. Include NPSH curve when applicable. Include electrical characteristics and connection requirements.

C. Manufacturer's Installation Instructions: Submit installation instructions for pumps, valves and accessories.

D. Manufacturer's Certificate: Certify products meet or exceed specified requirements.

1.4 CLOSEOUT SUBMITTALS

A. Section 01700 - Execution Requirements: Closeout procedures.

B. Project Record Documents: Record actual locations of valves and equipment.

C. Operation and Maintenance Data: Submit spare parts list, exploded assembly views and recommended maintenance intervals.

1.5 QUALITY ASSURANCE

A. General:

1. Materials and components manufactured for potable water use shall contain no more than a weighted average of 0.25 percent lead with respect to the wetted surfaces and meet the requirements of NSF/ANSI 372, third part testing and certification. Maintain one copy of each document on site.

1.6 QUALIFICATIONS

A. Manufacturer: Company specializing in manufacturing products specified in this section with minimum three years documented experience.

B. Installer: Company specializing in performing Work of this section with minimum three years documented experience.

1.7 PRE-INSTALLATION MEETINGS

A. Section 01300 - Administrative Requirements: Pre-installation meeting.

B. Convene minimum one week prior to commencing work of this section.

1.8 DELIVERY, STORAGE, AND HANDLING

A. Section 01600 - Product Requirements: Product storage and handling requirements.

B. Accept valves and equipment on site in shipping containers with labeling in place. Inspect for damage.

C. Provide temporary protective coating on cast iron and steel valves.

D. Provide temporary end caps and closures on piping and fittings. Maintain in place until installation.

E. Protect piping systems from entry of foreign materials by temporary covers, completing sections of the Work, and isolating parts of completed system.

1.9 ENVIRONMENTAL REQUIREMENTS

A. Section 01600 - Product Requirements.

B. Do not install underground piping when bedding is wet or frozen.

1.10 FIELD MEASUREMENTS

A. Verify field measurements prior to fabrication.

1.11 WARRANTY

A. Section 01700 - Execution Requirements: Product warranties and product bonds.

B. Furnish five year manufacturer warranty for domestic water piping.

1.12 EXTRA MATERIALS

A. Section 01700 - Execution Requirements: Spare parts and maintenance products.

B. Furnish two packing kits for each size valve and two pump seals for each pump model.

PART 2 PRODUCTS

2.1 DOMESTIC WATER PIPING, BURIED WITHIN 5 FEET OF BUILDING

A. Ductile Iron Pipe: AWWA C151.

1. Fittings: AWWA C110, ductile iron, standard thickness.

2. Joints: AWWA C111, rubber gasket with rods.

3. Jackets: AWWA C105 polyethylene jacket.

B. Copper Tubing: ASTM B88, Type K, annealed.

1. Fittings: ASME B16.18, cast copper, or ASME B16.22, wrought copper.

2. Joints: Compression connection or Brazed, AWS A5.8 BCuP silver/phosphorus/copper alloy with melting range 1190 to 1480 degrees F.

C. PVC Pipe: ASTM D1785, Schedule 80 ASTM D2241, polyvinyl chloride (PVC) material.

1. Fittings: ASTM D2467, Schedule 80, PVC.

2. Joints: ASTM D2855, solvent weld with ASTM D2564 solvent cement.

D. Polyethylene/Aluminum Composition Tubing: ASTM F1281 or ASTM F1282.

1. Fittings and Joints: Brass compression type.

E. High Density Polyethylene (HDPE) Piping

a. Smooth interior annular exterior corrugated polyethylene pipe as per ASTM D3350 minimum cell classification 335420C; AASHTO M294, Type S or AASHTO MP7-97, Type S. The closed cell structural core shall have a compressive strength no less than 20 lbs/square inch, which provides high stress resistance to cracks.

b. The bell-and-spigot HDPE piping network shall be joined using watertight connections in accordance with the requirements of ASTM D3212. Elastomeric seals (gaskets) made of polyisoprene and meeting the requirements of ASTM F477 shall show no visible leaks when tested under a 10 ft hydrostatic water test.

c. To preclude crumbling and provide better joint performance of the HDPE pipe, the bell and spigot ends shall be reinforced, including a bell tolerance device. The bell tolerance device must be installed by the pipe manufacturer.

d. Approved Manufacturers:

Hancor Inc.

2.2 DOMESTIC WATER PIPING, ABOVE GRADE

A. Copper Tubing: ASTM B88 (ASTM B88M), Type L, hard drawn.

1. Fittings: ASME B16.18, cast copper alloy or ASME B16.22, wrought copper and bronze.

2. Joints: Solder, lead free, ASTM B32, 95-5 tin-antimony, or tin and silver, with melting range 430 to 535 degrees F. Braze, AWS A5.8 BCuP silver/phosphorus/copper alloy with melting range 1190 to 1480 degrees F.

B. Steel Pipe: ASTM A53/A53M Schedule 40, galvanized, grooved ends.

1. Fittings: ASTM A395/A395M and ASTM A536 ductile iron, grooved ends.

2. Joints: Grooved mechanical couplings meeting ASTM F1476.

a. Housing Clamps: ASTM A395 and ASTM A536 ductile iron, hot dipped galvanized, compatible with steel piping sizes, rigid type.

b. Gasket: Elastomer composition for operating temperature range from -30 degrees F to 230 degrees F.

c. Accessories: Steel bolts, nuts, and washers.

C. CPVC Pipe: ASTM D2846/D2846M, ASTM F441/F441M, or ASTM F442/F442M, chlorinated polyvinyl chloride (CPVC) material.

1. Fittings: ASTM D2846/D2846M, ASTM F437, ASTM F438, ASTM F439, or ASTM F441/F441M, CPVC.

2. Joints: ASTM D2846/D2846M, solvent weld with ASTM F493 solvent cement.

D. PVC Pipe: ASTM D1785 Schedule 40, or ASTM D2241 SDR-26 for not less than 150 psi pressure rating, polyvinyl chloride (PVC) material.

1. Fittings: ASTM D2466, Schedule 40, PVC ASTM D2467, Schedule 80, PVC.

2. Joints: ASTM D2855, solvent weld with ASTM D2564 solvent cement.

2.3 UNIONS AND FLANGES

A. Unions for Pipe 2 inches and Smaller:

1. Ferrous Piping: Class 150, malleable iron, threaded.

2. Copper Piping: Class 150, bronze unions with soldered.

3. Dielectric Connections: Union with galvanized or plated steel threaded end, copper solder end, water impervious isolation barrier.

4. PVC Piping: PVC.

5. CPVC Piping: CPVC.

B. Flanges for Pipe 2-1/2 inches and Larger:

1. Ferrous Piping: Class 150, forged steel, slip-on flanges.

2. Copper Piping: Class 150, slip-on bronze flanges.

3. PVC Piping: PVC flanges.

4. CPVC Piping: CPVC flanges.

5. Gaskets: 1/16 inch thick preformed neoprene gaskets.

C. PVC Pipe Materials: For connections to equipment and valves with threaded connections, furnish solvent-weld socket to screwed joint adapters and unions, or ASTM D2464, Schedule 80, threaded, PVC pipe.

2.4 STRAINERS

A. Strainers in water service piping installed upstream of water meters shall be cast bronze body with stainless steel elements. Strainers shall be rated at 150 psi working pressure. Strainers shall be of the same manufacturer as the compound water meters.

B. Strainers in water service piping installed upstream of Double Detector Check Valves shall be flanged basket type, cast iron body with bronze basket and bronze handle and 1/16" perforations, good for the same working pressure as specified for fittings. Strainers shall be Sarco Type 528-B, Mueller Steam Specialty No. 165, or J.R. Smith No. 8795.

C. Y-Strainers

1. Except as otherwise noted strainers shall be full size Y-pattern provided with removable cylindrical or conical screens of monel or stainless steel and suitable flanges or tapping to connect with the piping they serve.

2. Strainers shall be cast iron on iron and steel piping and bronze on brass or copper piping except as otherwise noted in other sections of the specifications.

3. Screen perforations for water shall be 1/16" (0.57 diameter) for pipe sizes up to 3" and 1/8" for 4" and above.

D. Provide valves dirt blow-off connection for each Y-strainer. The blow-off connection shall terminate with a gate valve and nipple.

E. Bronze Y-Strainers shall be Sarco Type BT or Mueller Steam Specialty No. 352.

F. Cast iron Y-Strainers shall be Sarco Type IT or Mueller Steam Specialty No.11.

2.5 HOSE BIBBS

A. Manufacturers:

1. Mifab Model MHY-20.

2. Substitutions: Section 01600 - Product Requirements.

B. Furnish materials in accordance with NYS standards.

C. Interior: Bronze or brass with integral mounting flange, replaceable hexagonal disc, hose thread spout, chrome plated where exposed with hand wheel, [integral vacuum breaker in conformance with ASSE 1011.

D. Interior Mixing: Bronze or brass, wall mounted, double service faucet with hose thread spout, integral stops, chrome plated where exposed with hand wheels, and vacuum breaker in conformance with ASSE 1011.

2.6 HYDRANTS

A. Wall Hydrant:

1. Wall hydrants shall be nickel bronze with nickel bronze casing, polished nickel bronze face, brass operating parts throughout, adjustable wall clamp, renewable nylon seat, 3/4" HPT standard hose outlet with integral vacuum breaker, 3/4" IPS male thread ground joint union elbow adapter, nickel bronze access box and nickel bronze hinged cover with locking device. Furnish and deliver four (4) operating keys to the Custodian. Wall hydrants shall be Josam 71000, Jay R. Smith 5509-E, Wade W-8625, Zurn Z-1300.

B. Post Hydrant:

1. Provide post hydrants where indicated on the Drawings. Post Hydrant shall be cast iron non-freeze with aluminum housing, brass casing, brass valve housing, brass removable operating parts and neoprene washers, removable handle with 3/4" hose connection, 3/4" IPS inlet, approved equal to Josam 71700, Smith 5910, Zurn 1385, or Wade W-8610. For number, location, depth, etc., see Drawings.

2.7 BACKFLOW PREVENTERS

A. Manufacturers:

1. Wilkins Series 575.

2. Watts 909.

3. Febco 825Y.

4. Conbraco 40-200 series.

5. Substitutions: Section 01600 - Product Requirements.

B. Furnish materials in accordance with NYS standards.

C. Reduced Pressure Backflow Preventers:

1. Comply with ASSE 1013.

2. Bronze body, with bronze internal parts and stainless steel springs.

3. Two independently operating, spring loaded check valves; diaphragm type differential pressure relief valve located between check valves; third check valve opening under back pressure in case of diaphragm failure; non-threaded vent outlet; assembled with two gate valves, strainer, and four test cocks.

D. Double Check Valve Assemblies: Comply with ASSE 1012; Bronze body with corrosion resistant internal parts and stainless steel springs; two independently operating check valves with intermediate atmospheric vent.

2.8 WATER HAMMER ARRESTORS

A. Manufacturers:

1. Josam Series 75000.

2. Zurn Series Z-1700.
3. Smith NYBE Series 5000.

4. Substitutions: Section 01600 - Product Requirements.

B. Furnish materials in accordance with NYS standards.

C. ASSE 1010; stainless steel construction, bellows type sized in accordance with PDI WH-201.

D. Pre-charged suitable for operation in temperature range 34 to 250 degrees F and maximum 150 psi working pressure.

2.9 THERMOSTATIC MIXING VALVES

A. Manufacturers: Subject to requirements of the specification, provide the following manufacturer's products by one of the following or approved equal:
1. Leonard Valve
2. Bradley
3. Lawler
4. Substitutions: Division 01 - Product Requirements.

B. Valve: Bronze or cast brass body, stainless steel or copper alloy bellows, integral temperature adjustment. Conform to ASSE 1070 to temper water to maximum 110 degrees F.

C. Capacity: Listed on Drawings.

D. Accessories:
1. Check valve on inlets.
2. Volume control shut-off valve on outlet.
3. Stem thermometer on outlet.
4. Strainer stop checks on inlets.

2.10 BEDDING AND COVER MATERIALS

A. Bedding: Fill as specified in Division 31.

B. Cover: Fill as specified in Division 31.

C. Soil Backfill from Above Pipe to Finish Grade: Soil as specified in Division 31. Subsoil with no rocks over 6 inches in diameter, frozen earth or foreign matter.

PART 3 EXECUTION

3.1 EXAMINATION

A. Section 01300 - Administrative Requirements: Coordination and project conditions.

B. Verify excavations are to required grade, dry, and not over-excavated.

3.2 PREPARATION

A. Ream pipe and tube ends. Remove burrs.

B. Remove scale and dirt, on inside and outside, before assembly.

3.3 INSTALLATION - SERVICE CONNECTIONS

A. Provide new water service complete with approved [[reduced pressure] [double check] back-flow preventer and] water meter with by-pass valves [pressure reducing valve,] [and strainer].

B. Provide sleeve in wall for service main and support at wall with reinforced-concrete bridge. Caulk enlarged sleeve and make watertight with pliable material. Anchor service main inside to concrete wall.

C. Provide 18 gage galvanized sheet metal sleeve around service main to 6 inch above floor and 6 feet minimum below grade. Size for minimum of 2 inches of loose batt insulation stuffing.

3.4 INSTALLATION - BURIED PIPING SYSTEMS

A. Verify connection size, location, and invert are as indicated on Drawings.

B. Establish elevations of buried piping with not less than 4 ft of cover.

C. Establish minimum separation of 5 ft from sanitary sewer piping in accordance with NYSBC.

D. Excavate pipe trench in accordance with Division 31.

E. Install pipe to elevation as indicated on Drawings.

F. Place bedding material at trench bottom to provide uniform bedding for piping, level bedding materials in one continuous layer not exceeding 4 inches loose depth; compact to 95 percent maximum density.

G. Install pipe on prepared bedding.

H. Route pipe in straight line.

I. Install pipe to allow for expansion and contraction without stressing pipe or joints.

J. Pipe Cover and Backfilling:
1. Backfill trench in accordance with Division 31.
2. Maintain optimum moisture content of fill material to attain required compaction density.
3. After hydrostatic test, evenly backfill entire trench width by hand placing backfill material and hand tamping in 6 inches compacted layers to 6 inches minimum cover over top of jacket. Compact to 95 percent maximum density.
4. Evenly and continuously backfill remaining trench depth in uniform layers with backfill material.
5. Do not use wheeled or tracked vehicles for tamping.

3.5 FIELD QUALITY CONTROL

A. Section 01400 - Quality Requirements: Field inspecting, testing, adjusting, and balancing.

B. Test domestic water piping system in accordance with local authority having jurisdiction.

3.6 CLEANING

A. Section 01700 - Execution Requirements: Requirements for cleaning.

B. Disinfect water distribution system in accordance with Section 02516.

C. Prior to starting work, verify system is complete, flushed and clean.

D. Verify pH of water to be treated is between 7.4 and 7.6 by adding alkali (caustic soda or soda ash) or acid (hydrochloric).

E. Inject disinfectant, free chlorine in liquid, powder and tablet or gas form, throughout system to obtain residual from 50 to 80 mg/L.

F. Bleed water from outlets to obtain distribution and test for disinfectant residual at minimum 15 percent of outlets.

G. Maintain disinfectant in system for 24 hours.

H. When final disinfectant residual tests less than 25 mg/L, repeat treatment.

I. Flush disinfectant from system until residual concentration is equal to incoming water or 1.0 mg/L.

J. Take samples no sooner than 24 hours after flushing, from 10 percent of outlets and from water entry, and analyze in accordance with AWWA C651.

END OF SECTION

SECTION 221119

WATER SUPPLY ACCESSORIES

PART 1 GENERAL

1.01 SUBMITTALS

A. Product Data: Catalog sheets, specifications, dimensional data, and installation instructions for each item specified, excluding fasteners.

1.02 MAINTENANCE

A. Special Tools: Deliver to the Director's Representative.

1. Wall Hydrant T-Handle Locking Key: One for each wall hydrant.

2. Tools For Vandal Resistant Fasteners: One for each type and size.

1.03 Quality Assurance:

A. General:

1. Materials and components manufactured for potable water use shall contain no more than a weighted average of 0.25 percent lead with respect to the wetted surfaces and meet the requirements of NSF/ANSI 372, third part testing and certification.

PART 2 PRODUCTS

2.01 WATER HAMMER ARRESTORS

A. Hydro-pneumatically controlled with permanently sealed expansion chamber pre-charged with non-combustible gas, threaded connection, and conforming to ASME A112.26.1M - Water Hammer Arrestors, and ASSE 1010 - Water Hammer Arrestors.

a. Copper construction, piston type sized in accordance with PDI WH-201.

2.02 DRAIN VALVE

A. Cast brass body with renewable units, hose bibb vacuum breaker (ASSE 1011) with drainage feature, and removable cast iron hand wheel with vandal resistant fastener.

1. Valve must be completely assembled to make hose connection.

2. Connections: 3/4 inch threaded or solder end inlet, and 3/4 inch hose bibb outlet.

2.04 FASTENERS

A. Vandal Resistant Fasteners: Torx head with center pin.

PART 3 EXECUTION

3.01 INSTALLATION

A. Install the Work of this section in accordance with the manufacturer's printed installation instructions, unless otherwise specified.

B. Secure external components in place with vandal resistant fasteners or devices which cannot be removed without special tools.

END OF SECTION

SECTION 221300

SANITARY WASTE AND VENT PIPING

PART 1 GENERAL

1.1 SUMMARY

A. Section Includes:

1. ASTM B302 - Standard Specification for Thread-less Copper Pipe.

2. CISPI 301 - Standard Specification for Hub-less Cast Iron Soil Pipe and Fittings for Sanitary and Storm Drain, Waste, and Vent Piping Applications.

3. CISPI 310 - Specification for Coupling for Use in Connection with Hub-less Cast Iron Soil Pipe and Fittings for Sanitary and Storm Drain, Waste, and Vent Piping Applications.

B. Manufacturers Standardization Society of the Valve and Fittings Industry:

1. MSS SP 58 - Pipe Hangers and Supports - Materials, Design and Manufacturer.

2. MSS SP 69 - Pipe Hangers and Supports - Selection and Application.

3. MSS SP 89 - Pipe Hangers and Supports - Fabrication and Installation Practices.

1.2 SUBMITTALS

A. Product Data:

1. Piping: Submit data on pipe materials, fittings, and accessories. Submit manufacturers catalog information.

2. Hangers and Supports: Submit manufacturers catalog information including load capacity.

3. Sanitary Drainage Specialties: Submit manufacturers catalog information, component sizes, rough-in requirements, service sizes, and finishes.

B. Manufacturer's Installation Instructions: Submit installation instructions for material and equipment.

C. Manufacturer's Certificate: Certify products meet or exceed specified requirements.

1.3 QUALIFICATIONS

A. Installer: Company specializing in performing Work of this section with minimum three years documented experience.

1.4 DELIVERY, STORAGE, AND HANDLING

A. Protect piping systems from entry of foreign materials by temporary covers, completing sections of the Work, and isolating parts of completed system.

PART 2 PRODUCTS

2.1 SANITARY SEWER PIPING, BURIED

A. Cast Iron Soil Pipe: ASTM A74, service weight, plain ends.
1. Fittings: Cast iron, ASTM A74.
2. Joints: Hub-and-spigot, CISPI HSN compression type with ASTM C564 neoprene gaskets or lead and oakum.

2.2 SANITARY SEWER PIPING, ABOVE GRADE

A. Cast Iron Pipe: ASTM A74, service weight.
1. Fittings: Cast iron, ASTM A74.
2. Joints: ASTM C564, rubber gasket joint devices or lead and oakum.

B. Cast Iron Pipe: CISPI 301, hub-less, service weight.
1. Fittings: Cast iron, CISPI 301.
2. Joints: CISPI 310, neoprene gaskets and stainless steel clamp-and-shield assemblies.

C. Copper Tube: ASTM B88 Type L.
1. Fittings: ASME B16.23, cast bronze, or ASME B16.29, wrought copper.
2. Joints: Solder, lead free, ASTM B32, 95-5 tin-antimony, or tin and silver, with melting range 430 to 535 degrees F.

D. Steel Pipe: ASTM A53/A53M Schedule 40, galvanized.
1. Fittings: Cast Iron, ASME B16.1, flanges and fittings; ASME B16.4, threaded fittings.
2. Fittings: Malleable Iron, ASTM A47/A47M.
3. Joints: Threaded for pipe 2 inch and smaller; flanged for pipe 2-1/2 inches and larger.

E. Steel Pipe: ASTM A53/A53M Schedule 40, galvanized, cut grooved ends.
1. Fittings: ASTM A395/A395M and ASTM A536 ductile iron, or ASTM A234/A234M carbon steel, grooved ends.
2. Joints: Grooved mechanical couplings meeting ASTM F1476.
a. Housing Clamps: ASTM A395/A395M and ASTM A536 ductile iron, hot dipped galvanized, compatible with steel piping sizes, rigid type.

b. Gasket: Elastomer composition for operating temperature range from -30 degrees F to 230 degrees F.
c. Accessories: Steel bolts, nuts, and washers.

F. PVC Pipe: ASTM D2729, polyvinyl chloride (PVC) material.
1. Fittings: ASTM D2729, PVC.
2. Joints: ASTM D2855, solvent weld with ASTM D2564 solvent cement.

2.3 BEDDING AND COVER MATERIALS

A. Bedding: Fill as specified in Division 31.

B. Cover: Fill as specified in Division 31.

C. Soil Backfill from Above Pipe to Finish Grade: Soil as specified in Division 31. Subsoil with no rocks over 6 inches in diameter, frozen earth or foreign matter.

PART 3 EXECUTION

3.1 PREPARATION

A. Remove scale and dirt, on inside and outside, before assembly.

B. Prepare piping connections to equipment with flanges or unions.

C. Keep open ends of pipe free from scale and dirt. Protect open ends with temporary plugs or caps.

3.2 INSTALLATION - BURIED PIPING SYSTEMS

A. Verify connection size, location, and invert are as indicated on Drawings.

B. Establish elevations of buried piping with not less than 4 ft of cover.

C. Excavate pipe trench in accordance with Division 31.

D. Place bedding material at trench bottom to provide uniform bedding for piping, level bedding materials in one continuous layer not exceeding 4 inches loose depth; compact to 95 percent maximum density.

E. Install pipe on prepared bedding.

F. Route pipe in straight line.

G. Install pipe to allow for expansion and contraction without stressing pipe or joints.

H. Pipe Cover and Backfilling:
1. Backfill trench in accordance with Division 31.

2. Maintain optimum moisture content of fill material to attain required compaction density.
3. After hydrostatic test, evenly backfill entire trench width by hand placing backfill material and hand tamping in 6 inches compacted layers to 6 inches minimum cover over top of jacket. Compact to 95 percent maximum density.
4. Evenly and continuously backfill remaining trench depth in uniform layers with backfill material.
5. Do not use wheeled or tracked vehicles for tamping.

3.3 INSTALLATION – UNDER AND ABOVE GROUND PIPING

A. Establish invert elevations, slopes for drainage to 1/4 inch per foot minimum. Maintain gradients.

B. Extend cleanouts to finished floor or wall surface. Lubricate threaded cleanout plugs with mixture of graphite and linseed oil. Provide clearances at cleanout for snaking drainage system.

C. Encase exterior cleanouts in concrete flush with grade.

D. Install floor cleanouts at elevation to accommodate finished floor.

E. Provide non-conducting dielectric connections wherever jointing dissimilar metals.

F. Route piping in orderly manner and maintain gradient. Route parallel and perpendicular to walls.

G. Install piping to maintain headroom. Do not spread piping, conserve space.

H. Group piping whenever practical at common elevations.

I. Support cast iron drainage piping at every joint.

END OF SECTION

SECTION 223400

GAS FIRED DOMESTIC WATER HEATERS

PART 1 – GENERAL

1.1 RELATED DOCUMENTS

Drawings and general provisions of the Contract, including General and Supplementary Conditions and Divisions 1 Specification Sections, apply to this section.

1.2 SUMMARY

This section includes condensing gas-fired storage water heaters for potable water.

1.3 REFERENCES

A. ASME Boiler and Pressure vessel code, section IV, Part HLW

B. ANSI Z21.10.3 /CSA 4.3 “Gas Water Heaters”

C. ASHRAE/IES 90.1

D. ISO 9001 Quality Management System

E. CSD-1 “Controls and Safety Devices for Automatically Fired Boilers”

F. NFPA 70- National Electric Code

G. NFPA 54- National Fuel Gas Code

H. NSF/ANSI Standard 61- Drinking Water System Components

I. NSF/ANSI Standard 372 – Drinking Water System Components – Lead Content

J. ASTM G123 - 00(2005) “Standard Test Method for Evaluating Stress-Corrosion Cracking of Stainless Alloys with Different Nickel Content in Boiling Acidified Sodium Chloride Solution.”

1.4 DESCRIPTION OF WORK

A. Extent of Water Heater Work is indicated on the Drawings and by the requirements of this section.

B. All water heaters must be certified to meet the requirements of the federally mandated Reduction of Lead in Drinking Water Act of 2014 (not

more than a weighted average of .25% lead). Regardless of model numbers indicated herein, provide equivalent models that meet the requirements of the act. All solder used during installation of water heaters associated with the potable water system designed for human consumption must also meet the requirements.

1.5 SUBMITTALS

A. Product Data: Include rated capacities; shipping, installed, and operating weights; furnished specialties and accessories for each model indicated.

B. Shop Drawings: Detail equipment assemblies and indicate dimensions, required clearances, components, and size of each field connection.

C. Wiring Diagrams: Detail for wiring power signal, differentiate between manufacture- installed and field-installed wiring.

D. Maintenance Data: Include in the maintenance manuals specified in Division 1. Include maintenance guide and wiring diagrams.
Submit Certificates for the following:

1. A compliance affidavit of the specified product with ASME “HLW” code stamping.

2. Certificate stating water heater meets UL or ANSI requirements and installation is in accordance with all applicable Federal, State and Local Codes and installation Drawings. If not approved, provide certificate stating water heater has Material and Equipment Acceptance (MEA) approval number or documentation certifying acceptance from the Office of Technical Certification & Research (OTCR). Submit copy of MEA resolution indicating water heater approval.

3. Submit affidavit from the manufacturer stating that water heater’s installation is as per the company’s instructions.

E. Maintenance Data

1. Spare parts

2. Maintenance Manuals

F. Certifications

1. Lead-free Certifications: Provide manufacturer’s certifications that water heater in contact with the potable water meets the

requirements of the Reduction of Lead in Drinking Water Act effective Jan 4, 2014.

1.6 REGULATORY REQUIREMENTS

A. Conform to applicable code for internal wiring of factory wired equipment

B. Units: ETL, UL or CSA Certified as a Complete Gas Fired Water Heater Assembly.

C. Gas Train shall comply with ANSI Z.21.10.3 or UL 795.

D. Conform to ASME Section IV. Part HLW for Water Heater construction.

1.7 QUALITY ASSURANCE

A. Listing: The water heater will be listed ETL listed to UL 795 or ANSI Z21.10.3/CSA 4.3 “Gas Water Heaters”

B. ASME Compliance: Water heater shall bear the ASME HLW stamp and be National Board listed

C. Water heaters with full rated input between will operate at a minimum 95.5% thermal efficiency at full firing rate when tested to the ANSI Z21.10.3 thermal efficiency test protocol (DOE 10 CFR 431).

D. The water heater will comply with current ASHRAE 90.1 requirements.

E. Water heater manufacturer certified to the ISO 9001 International Quality System.

1.8 COORDINATION

Coordinate size and location of concrete bases

1.9 WARRANTY

A. Storage tank and heat exchanger will have a manufacturer’s **15-year** warranty (8 years non-prorated, 7 years prorated) covering manufacturing or material defects, waterside or fire side corrosion, leaks, and/or the production of rusty water. Warranties must be directly provided from the water heater manufacturer. Warranties provided by distributors, contractors, sales representatives or third-party insurers will not be accepted.

B. Burner and all heater parts: 1 year

C. The water heater shall have a first year service policy, which shall cover labor and freight costs under certain conditions for warranty covered services for a period of 1 year from date of startup.

1.10 CODES AND STANDARDS

A. The contractor shall comply with the Reduction of Lead in Drinking Water Act. Beginning on January 4, 2014, a federal law known as “Reduction of Lead in Drinking Water Act” takes effect. This law requires that faucet, plumbing fixtures, pipe and pipe fittings, including water heaters must conform to” lead free” criteria level whenever these plumbing related products are employed for delivery of potable water for human consumption.

1. The law makes it unlawful for any person, including a contractor, to introduce into commerce any pipe, pipe fitting, plumbing fixture, faucet that is not lead free.

   a. “Lead free” content is intended to mean not more than 0.2% lead when applied in connection to solder and flux and not more than 0.25 percent of the weighted average of lead when used with respect to the wetted surfaces of pipes, pipe fittings, plumbing fixtures and faucets.

   b. The section of the federal act that applies to solder and flux, 0.2% lead content, went into effect back in August of 1998; and for the most part soldering product being sold in today’s market complies with the law.

   c. The requirement for .25% weighted average of lead when applied to the wetted surfaces of pipes, pipe fittings, plumbing fixtures and faucet is the new section of the law that requires special attention from a contractor.

2. To ensure compliance with “Reduction of Lead in Drinking Water Act”, a procedure for determining lead content was developed. The calculation procedure works as follows:

   a. “For each wetted component, the percentage of lead in the component shall be multiplied by the ratio of the wetted surface area of that component to the total wetted surface area of the entire product to arrive at the weighted percentage of lead of the component. The weighted percentage of lead of each wetted component shall be added together, and the sum of these weighted percentages shall constitute the weighted average lead content of the product. The lead content of the material

used to produce wetted components shall be used to determine compliance with paragraph (1)(B) [Paragraph 1B Describes 0.25% Requirement for 0.25 % Lead Content]"

b. As an alternative to implementing the lead content calculation, the contractor may choose to demonstrate compliance with the act by requiring from manufacturer documentation certifying that products are lead free based on either calculation or tests or third party certification.

PART 2 – PRODUCTS

2.1 MANUFACTURERS

A. Available Manufacturers: Manufacturer shall be a company specializing in manufacturing the products specified in this section with minimum twenty years' experience. The water heaters shall be manufactured by a company that has achieved certification to the ISO 9001Quality Management System.

B. The water heaters shall be ETL listed as a complete unit. The heater shall satisfy current Federal Energy Policy Act standards for both thermal efficiency and stand-by heat losses as established for gas fired water heaters.

C. Manufacturers: PVI is the basis of design - refer to Drawing Schedules for specified model. Acceptable manufacturers shall be subject to compliance with the requirements:

a. Lochinvar
b. A.O. Smith
c. State Water Heaters
d. PVI
e. Bradford White
f. Substitutions: Approved equal.

2.2 CONSTRUCTION

A. Water heaters will be of the BTU input(s) and storage capacity indicated on the equipment schedule.

B. The water heater will be a vertical fire tube, design that is constructed and stamped in accordance with Section IV, Part HLW of the ASME code. Water heater will be National Board Registered for a working pressure of 150 psi and will be pressure **tested** at 1-1/2 times working pressure.

C. Water heater will be a single-pass, down-fired, fire tube design contained within an integral storage tank.

D. Tank, combustion chamber and fire tubes will be unlined. Lined or plated water heaters will not be acceptable.

E. Tank, combustion chamber and fire tubes will be constructed from phase-balanced austenitic and ferritic duplex steel with a chemical structure containing a minimum of 21% chromium to prevent corrosion and mill certified per ASTM A 923Methods A to ensure that the product is free of detrimental chemical precipitation that affects corrosion resistance. The material selected shall be tested and certified to pass stress chloride cracking test protocols as defined in ISO 3651-2and ASTM G123 - 00(2005) “Standard Test Method for Evaluating Stress-Corrosion Cracking of Stainless Alloys with Different Nickel Content in Boiling Acidified Sodium Chloride Solution.”

F. Tank will be welded utilizing joint designs to minimize volume of weld deposit and heat input. All heat affected zones (HAZ) shall be processed after welding to ensure the HAZ corrosion resistance is consistent with the mill condition base metal chemical composition. Weld procedures (amperage, volts, welding speed, filler metals and shielding gases) utilized shall result in a narrow range of austenite-ferrite microstructure content consistent with phase balanced objectives for welds, HAZ and the base metal.

G. All internal and external tank surfaces shall undergo full immersion passivation and pickling processing to meet critical temperature, duration and chemical concentration controls required to complete corrosion resistance restoration of pressure vessel surfaces. Other passivation and pickling methods are not accepted. Immersion passivation and pickling certification documents are required and shall be provided with each product.

H. Materials shall meet ASME Section II material requirements and be accepted by NSF 61 for municipal potable water systems. Storage tank materials shall contain more than 80% post-consumer recycled materials and be 100% recyclable.

I. All water contacting tank surfaces will be non-porous and exhibit 0% water absorption.

J. All tank connections/fittings will be non-ferrous or stainless steel.

K. To preserve thermal efficiency, the water heater will not use or require a circulator piped from the hot water outlet to the cold water inlet of the heater for the purpose of temperature control during normal operation. Connection for a building return circulation line will be made to a dedicated hot return fitting above the middle of the storage vessel and not the cold inlet piping. Connection to a sidearm tank, if used, will be made to a dedicated hot return fitting above the middle of the storage vessel and not the cold inlet piping.

L. Finished vessel will not require sacrificial or impressed current anodes and none will be used. Water heaters or storage tanks that employ anode rods of any type will not be acceptable.

M. Combustion will be provided by a premix, fan-assisted surface burner with a gas train meeting UL, ANSI and FM standards for the input specified.

N. Burner will be stainless steel.

O. Gas train components will capable of self-proportionating gas and air to maintain optimum combustion in response to varying vent pressures.

P. The burner will modulate with up to a 4-to-1 turndown.

Q. Burner NOx emissions will be less than 20 ppm when corrected to 3% oxygen.

R. Water heater will be a category IV, condensing appliance and listed for use with CPVC, or stainless steel vent. Water heater is equipped for connection to direct inlet combustion air vent. Vents for inlet air and exhaust can terminate in different pressure zones.

S. The water heater shall be completely factory packaged on a skid, requiring only job site hookup to utilities, venting, and plumbing. The heater shall be insulated to meet current ASHRAE 90.1standby loss requirements and jacketed with powder-coated steel panels. Pressure vessel shall include a ball-type drain valve.

2.3 PERFORMANCE

A. Water heaters will operate at a minimum 95.5% thermal efficiency at full firing rate when tested to the ANSI Z21.10.3 thermal efficiency test protocol (DOE 10 CFR 431).

B. Water heater will meet the thermal efficiency and standby heat loss requirements of the latest version of the ASHRAE 90.1 standard.

C. Water heaters will be third-party tested and certified to NSF/ANSI 372 standard for lead content.

2.4 WATER HEATER TRIM

A. <u>As a minimum</u>, the heater will be equipped with the following:
   a. electronic flame monitoring
   b. electronic low water cutoff
   c. an *immersion* operating control
   d. an *immersion* UL listed temperature limiting device
   e. an ASME- rated temperature and pressure relief valve

f. and options as selected on form PV 8293

B. Operating and safety controls shall meet the requirements of UL 795 and FM

C. The water heater shall employ an electronic operating control with digital temperature readout. Control will display status, faults, firing rate and history in plain text. The operating control shall be capable of connecting to a building automation system through serial connection using Modbus RTU protocol. A 15-event fault history will be stored on the device.

2.5 EXPANSION TANK

A. Manufacturers:
   1. Potable water system: Amtrol ASME tank, see Drawings for model.

   2. Other acceptable manufacturers offering equivalent products.
      a. Taco
      b. Bell and Gossett.

B. Expansion Tank shall be hung from ceiling structure, suitable for domestic potable water.

C. Construction: Closed, welded steel, tested and stamped in accordance with ASME SEC 8-D; cleaned, prime coated, and supplied with relief valve, rated to 150 psi.

PART 3 – EXECUTION

3.1 INSTALLATION

A. Maintain manufacturer's recommended clearances around and over water heaters.
B. Install water heater on concrete housekeeping pad, minimum 4 inches high and 6 inches larger than water heater base on each side. Refer to Section 033000.
C. Connect natural gas piping in accordance with NYC FGC.
D. Connect domestic hot water and domestic cold water piping to supply and return water heater connections.
E. Install the following piping accessories. Refer to Section 221100.
   a. On supply:
      i. Thermometer well and thermometer.
      ii. Strainer.
      iii. Pressure gage.
      iv. Shutoff valve.
   b. On return:
      i. Thermometer well and thermometer.
      ii. Pressure gage.

iii. Shutoff valve.

F. Install the following piping accessories on natural gas piping connections.
   a. Strainer.
   b. Pressure gage.
   c. Shutoff valve.
   d. Pressure reducing valve.

G. Install discharge piping from relief valves and drain valves to nearest floor drain.

H. Install circulator and diaphragm expansion tank on water heater.

I. Install water heater trim and accessories furnished loose for field mounting.

J. Install electrical devices furnished loose for field mounting.

K. Install control wiring between water heater control panel and field mounted control devices.

L. Connect flue to water heater outlet, full size of outlet. Refer to Section 23 51 00.

M. Install concentric termination fitting through the roof. Field support the piping from the roof structure. For multiple concentric fittings, mounting height shall be the same for all installations. Install a minimum of 10’ from an adjacent parapet wall. Refer to the hot water heater schematic on drawings for additional mounting dimension requirements. Refer to manufacturer’s recommendations for installation guidelines.

3.2 START-UP

Start up on the unit will be performed by factory trained and authorized personnel. A copy of the startup report will be provided to the owner.

SECTION 224200

PLUMBING FIXTURES

PART 1 GENERAL

1.01 SUBMITTALS

A. Product Data: Catalog sheets, specifications, roughing dimensions, and installation instructions for each item specified except fasteners.

1. Deliver cut out data for countertop fixtures to the Owner.

B. Samples:

1. Water Closet Seat: One seat if other than product specified. Sample will be returned and if approved, may be installed on the Project.

1.02 QUALITY ASSURANCE

A. Regulatory Requirements:

1. Comply with applicable requirements of FS WW-P-541, and the following standards:

a. ANSI/ASME A112.6.1M - Floor Affixed Supports for Off-the-Floor Plumbing Fixtures for Public Use.

b. ANSI/ASME A112.18.1M - Plumbing Fixture Fittings.

c. ANSI/ASME A112.19.1M - Enameled Cast Iron Plumbing Fixtures.

d. ANSI/ASME A112.19.2M - Vitreous China Plumbing Fixtures.

e. ANSI/ASME A112.19.6 - Hydraulic Requirements for Water Closets and Urinals.

2. Materials and installations designated as handicapped accessible shall conform with the following:

a. ANSI A117.1 - Buildings and Facilities - Providing Accessibility and Usability for Physically Handicapped People.

b. The Americans with Disabilities Act Accessibility Guidelines for Buildings and Facilities (ADAAG), (Appendix A to 28 CFR Part 36).

c. The Uniform Federal Accessibility Standards (UFAS), (Appendix A to 41 CFR Part 101-19.6).

3. Each fixture carrier support shall be listed by model number in the fixture support manufacturer's Fixture Support Selection Guide as being recommended for support of the appropriate fixture.

B. Plainly and permanently mark each fixture and fitting with the manufacturer's name or trade mark.

1.03 MAINTENANCE

A. Special Tools: Deliver to the Owner.

1. Furnish the following tools labeled with names and locations where used.

a. Keys for stops (furnished with stops).

b. Tools for Vandal Resistant Fasteners: Two for each type and size.

PART 2 PRODUCTS

2.01 MATERIALS - GENERAL

A. Vitreous China: First quality, smooth, uniform color and texture, with fused on glaze covering surfaces exposed to view.

1. Surfaces shall be free of chips, craze, warpage, cracks and discolorations. Surfaces in contact with walls or floors shall be flat, with warpage not to exceed 1/16 inch per foot.

2. Color: White.

B. Porcelain Enameled Cast Iron: Smooth, uniform color and texture, having fused on glaze covering surfaces exposed to view.

1. Material shall show no cracks, chips, craze or discolorations.

2. Enameled surfaces shall be acid resistant unless otherwise specified.

3. Color: White.

C. Fixture Trim: Brass, bronze, or stainless steel construction; consisting of supply and waste fittings, faucets, traps, stop valves, escutcheons, sink strainers, nipples, supplies, and metal trim.

1. Brass piping: Ips standard weight, with standard weight, 125 lb cast brass fittings.

3. Brass tubing: 18 B & S gage.

3. Stainless steel: 18-8 Type 302 or 304 unless otherwise specified.

C. Fixture Trim Finishes:

1. Brass or Bronze: Polished or satin finished chrome plating, 0.02 mil chromium over 0.2 mil nickel plating.

2. Stainless Steel: Invisible welds and seams, and unless otherwise specified, polished to No. 4 commercial finish.

D. Fixture Hold-down Bolts: Steel, plated for corrosion resistance.

1. Cap nuts: Metal, polished and chrome plated.

F. Combination Faucets: Faucets shall turn counter to each other for the on and off positions.

G. Vandal Resistant Fasteners: Torx head with center pin.

2.02 TYPE P-2 LAVATORY

A. Fixture: Vitreous china, unitized construction, straight front and sides, flat top graded to bowl, cast-in soap dish, anti-splash rim and front overflow; designed for concealed arm supports.

1. Dimensions: 20 inches long, 18 inches front to back, 3-1/2 inches front and side apron.

2. 4 inch high integral back.

B. Supply Fitting: Individual deck mounted, electronic automatic metering faucet:

1. Maximum Flow: 0.5 gpm. at 80 psi.

a. Exception: Metering faucets shall have a maximum flow of 0.25 gallons per cycle.

2. Over rim spout with aerator.

3. Renewable operating units.

4. Vandal resistant assembly.

5. 1/2 inch inlet lock nut and coupling nut.

C. Waste Fitting: Pop-up type, actuated by a lift knob on the back ledge.

1. Metal drain plug.

2. Solid metal lift knob and cast escutcheon.

3. 1-1/4 inch tailpiece.

4. Vandal resistant assembly.

D. Trap: Cast brass, non-adjustable P trap, 1-1/4 inch tubing inlet, 1-1/2 inch ips. outlet.

1. Bottom cleanout plug.

2. Ips brass nipple with solid cast brass escutcheon.

E. Supplies: 3/8 inch ips. brass with key operated stops and solid cast brass escutcheons.

1. Wall Supplies: Angle stops with keys.
2. Floor Supplies: Straight stops with keys.

F. Faucet Hole Cover: Cast brass, rounded top, and threaded shank, with backing plate, lock washer and nut.

2.03 TYPE P-2A LAVATORY, HC

A. Fixture: Vitreous china, unitized construction, straight front and sides, flat top graded to bowl, cast-in soap dish, anti-splash rim and front overflow; designed for concealed arm supports.

1. Dimensions: 20 inches long, 18 inches front to back, 3-1/2 inch front and side apron.

2. 4 inch high integral back.

B. Supply Fitting: Individual deck mounted, electronic automatic metering faucet:
1. Maximum Flow: 0.5 gpm at 80 psi.

a. Exception: Metering faucets shall have a maximum flow of 0.25 gallons per cycle.

2. Over rim spout with aerator.

3. Renewable operating units.

4. Vandal resistant assembly.

5. 1/2 inch inlet lock nut and coupling nut.

C. Waste Fitting: 1-1/4 inch tailpiece with cast brass flat perforated strainer grate.

D. Trap: Cast brass, non-adjustable P trap, 1-1/4 inch tubing inlet, 1-1/2 inch ips outlet.

1. Bottom cleanout plug.

2. Ips brass nipple with solid cast brass escutcheon.

E. Supplies: 3/8 inch ips brass with key operated stops and solid cast brass escutcheons.

1. Wall Supplies: Angle stops with keys.

2. Floor Supplies: Straight stops with keys.

G. Faucet Hole Cover: Cast brass, rounded top, and threaded shank, with backing plate, lock washer and nut.

2.04 FIXTURE SUPPORTS AND SUPPORTING DEVICES FOR LAVATORIES, SINKS, AND EQUIPMENT

A. General: Ferrous metal members of carriers and supporting devices with the exception of chrome plated or porcelain enameled cast iron, shall be factory painted for corrosion resistance.

B. Wall Mounted Carrier Supports: Plate type system, with steel plates on both sides of the wall and through-bolted. On walls having an integral finish, a single plate wall carrier designed for such installations may be used. Each carrier shall be provided with the appropriate fixture supporting devices specified, or recommended by the Carrier manufacturer's Fixture Support Selection Guide.

1. Concealed Arms: Steel, with fixture locking lugs, leveling screws and a means of attaching, positioning and securing the fixture to the carrier.

a. Trim: Polished, Chrome plated metal escutcheon to space fixture two inches from the wall.

C. Wood Stud Filler Piece: 2 inch x 8 inch wood planking cut to fit between wood studding. Fasten with four 3/8 inch x 2-1/2 inch lag bolts with washers.

2.05 VITREOUS CHINA WATER CLOSETS

A. Fixtures: Vitreous china, full size, elongated bowl with integral flushing rim and jet; trapway at the rear and the outlet centered between a pair of hold down bolt holes.

1. Trap-way size: Pass minimum ball of 2 inches.

2. Trap seal: 2 inches minimum.

3. Water surface area: 12 inches x 10 inches minimum.

4. Provisions for flushing:

   a. 1-1/2 inch top spud for flush valve operation.

5. Wall Supported Fixture Heights:

   a. Standard Fixture: 14 to 15 inches from finished floor to rim.

   b. Handicapped Accessible Fixture: 17 to 19 inches from finished floor to top of seat (15-13/16 to 17-13/16 inches from finished floor to top of rim based on 1-3/16 inch seat height).

B. Operation: Fixture shall flush satisfactorily without extraordinary rise of water level in the bowl.

1. Maximum gallons of water per flush: 1.28 gallons.

C. Water Closet Wall Flange:

1. For Use with DWV Copper Tubing: Cast brass, 48 ounce minimum weight.

2. For Use with Cast Iron Soil Pipe: Cast iron, 90 ounce minimum weight.

C. Closet Seat: Extra heavy duty, commercial design; Model 1655-C by Bemis Mfg. Co., Model No. 527-CH by Beneke Corp., or Model No. 9500C by Church Seat Co.

1. Material and Construction: Solid plastic, open front, less cover, molded in one piece with no joints, seams or crevices.

2. The manufacturer's name shall be molded into the seat.

3. Metal check hinges shall be integrally molded into the seat. Hinges, inserts, bearings and posts shall be of brass or stainless steel. Cover upper post and metal exposed above fixture rim with plastic to match seat.

4. Surface shall be hard, polished, impervious to moisture, and not affected by the action of uric acid.

5. Color: White.

D. Water Closet Types:

1. Type 1 & 1A Water Closet: Wall supported, rear outlet, top spud inlet, siphon jet action, activated by an exposed flush valve.

2.06 FLUSH VALVES

A. Control Mechanism: Diaphragm or piston operated; do not intermix types.

A. Maximum Flow Per Flush:

1. Water Closet: 1.1/1.6 gallons dual flush.

C. Flush Valve Assemblies: Flush valve, stop-check, tailpiece, vacuum breaker, and fixture spud coupling, including wall and spud flanges.

D. Valve Materials:

1. Valve Body: Brass or bronze.

2. Valve Internal Parts: Corrosion resistant materials that will not be affected by the action of or contact with water.

E. Operating Features:

1. Valve operators shall employ the non-hold open feature.

2. Piston type valves shall be field adjustable.

F. Valve Operators:

1. Automatic, electronic with dual flush mode selection. Sloan ECOS or approved equal.

G. Assembly Components:

1. Flush Pipe: Seamless brass tubing with integral vacuum breaker, No. 18 B & S gage.

2. Fitting: Cast brass.

3. Stop-Check: Brass or bronze body, non rising stem stop valve with a built-in automatic check.

a. Exposed Stop-Check: Screwdriver operated with protective cap.

b. Concealed Stop-Check: Wheel handle operated.

4. Spud Coupling and Wall Flanges: Cast brass.

PART 3 EXECUTION

3.01 FIXTURE SUPPORT AND SUPPORTING DEVICE INSTALLATION

A. Install heavy duty floor mounted carrier supports with specified fixture supporting devices for wall type plumbing fixtures.

1. Secure to building construction with lag bolts and metal expansion shields, or other appropriate means as required by the construction encountered.

B. Fixture Supporting Devices: Attach fixtures by means of the following fixture supporting devices attached to carrier supports.

FIXTURE	SUPPORTING DEVICE
Lavatory, P2 & P2A	Concealed arms.
Water Closet	Bolt to comb. carrier and drainage fitting.

3.02 FIXTURE INSTALLATION

A. Install the Work of this section in accordance with the manufacturer's printed installation instructions.

B. Install fixtures level and at proper height, tighten connections, and install hold-down bolts, cap nuts and cover plates, where required.

C. Lavatories:

1. Mount lavatories 31 inches from finished floor to rim unless otherwise specified.

2. Mount handicapped accessible fixtures 34 inches from finished floor to rim. Refer to Standard Drawing No. 93/S3013 bound herein, for special clearances required for handicapped accessible fixtures.
   d. Caulk perimeter of fixture; strike a neat joint.

D. Water Closets:

1. Wall Supported Fixtures:

   a. Set fixture in bed of setting compound; remove excess.

2. After connections are tightened, install cap nuts and washers.

3. Install water closet seats when directed.

   a. Caulk perimeter of fixture; strike a neat joint.

E. Flush Valves:

1. Standard Fixtures: Install flush valves on fixture centerline, and at following heights above fixture rim or back to centerline of water inlet to flush valve.

   a. Water Closet: 11-1/2 inches.

2. Handicapped Accessible Fixtures: Install flush valves on fixture centerline, and at following height above finished floor to centerline of flush valve operator. Distance between centerline of flush valve operator and centerline of water inlet is 1-1/2 inches.

   a. Water Closet: Approximately 31-1/2 inches, and mounted on wide side of stall.

      1) Coordinate mounting height with Construction Work Contractor to avoid interference with grab bar, and to facilitate flush valve servicing.

3. Slip joints in flush pipe connections allowed only at fixture spud and vacuum breaker ends; others shall be screwed connections.

4. Score tubing ends before assembling to assure tight slip joint connections. No score marks shall be visible after assembly.

5. In utility corridors, solder screwed flush pipe connections.

3.03 LAVATORY INSULATION KIT

A. Manufacturers: Subject to compliance with requirements, provide products by one of the following or approved equal:
   1. TRU-BRO Inc.
   2. McGuire Manufacturers.
   3. SKAL-Guard.
   4. Substitutions: Section 016000 - Product Requirements.

B. Product Description: Where Lavatories are noted to be insulated for ADA compliance, furnish the following: Safety Covers conforming to ANSI A177.1 and consisting of insulation kit of molded closed cell vinyl construction, 3/16 inch thick, white color, for insulating tailpiece, P-trap, valves, and supply piping. Furnish with weep hole and angle valve access covers.

3.04 CLEANING, FLUSHING AND ADJUSTMENT

A. Clean fixture and trim. Remove grease and dirt; polish surfaces but leave stickers and warning labels intact.

B. Flush supply piping and traps; clean strainers.

C. Adjust stops for proper delivery.

D. Adjust metering faucets for proper timing.

END OF SECTION

SECTION 230500

COMMON WORK RESULTS FOR HVAC

PART 1 - GENERAL

1.01 PRODUCT OPTIONS AND SUBSTITUTIONS

A. Refer to the Division 1 Sections for requirements in selecting products and requesting substitutions.

1.02 SCOPE OF WORK

A. The following is a general listing of work items to be provided under this Contract. Work indicated is not necessarily all inclusive, nor shall it limit the extent of the work or exclude any work shown or specified and not listed.

B. Work as indicated in the contract documents and as specified, including but not limited to the complete removal of material and equipment from the site.

C. Furnish and install materials, equipment, and labor for a complete installation a specified in these contract documents.

1.03 PRODUCT LISTING

A. Prepare a listing of major equipment and materials for the project. Submit this listing for approval.

B. When two or more items of same material or equipment are required (pumps, valves, etc.) they shall be of the same manufacturer. Product manufacturer uniformity does not apply to raw materials, bulk materials, pipe, tube, fittings, sheet metal, wire, steel bar stock, welding rods, solder, fasteners, motors for dissimilar equipment units, and similar items used in work, except as otherwise indicated.

C. Provide products which are compatible within systems and other connected items.

1.04 NAMEPLATE DATA

A. Provide permanent operational data nameplate on each item of power operated equipment, indicating manufacturer, product name, model number, serial number, capacity, operating and power characteristics, labels of tested compliances, and similar essential data. Locate nameplates in an accessible location.

1.05 DELIVERY, STORAGE, AND HANDLING

A. Deliver products to project properly identified with names, model numbers, types, grades, compliance labels, and similar information needed for distinct

identifications; adequately packaged and protected to prevent damage during shipment, storage, and handling.

B. Store equipment and materials at the site, unless off-site storage is authorized in writing. Protect stored equipment and materials from damage.

C. Coordinate deliveries of materials and equipment to minimize construction site congestion. Limit each shipment of materials and equipment to the items and quantities needed for the smooth and efficient flow of installations.

1.06 DIMENSIONAL INFORMATION

A. Dimensional information used for layout and locations shall be taken from architectural or structural drawings used by the construction trades.

B. HVAC drawings are diagrammatic and have no dimensional significance. Do not scale. Locations of equipment and piping are to be as:

1. Shown on the drawings;
2. Directed in the field;
3. Required for proper connection of equipment to be served;
4. Required for proper symmetry in the space involved;
5. With deviations made only with specific approval of Owner.

C. Review the drawings of other trades and contractors, exchange shop drawings with them, cooperate in the preparation or prepare space layouts as required, to avoid conflicts and interferences with the installation of other trades in advanced stages of construction.

D. Field verify all existing conditions and coordinate with other trades prior to fabrication and installation of equipment and material. Lack of field verification does not constitute a basis for additional monies during construction. Contractor assumes full responsibility for completeness of installation including coordination of work with other trades.

E. Materials and equipment shall be shipped to the site knocked down to fit through existing building openings. Field verify the dimensions of existing openings and verify methods of delivery of materials and equipment prior to fabrication. Include in the bid price all costs associated with the disassembling and reassembling materials and equipment as required for delivery and installation.

1.07 SUBMITTALS

A. Submit manufacturer's technical product data and installation instructions for materials and products.

B. Record Drawings: At project closeout, submit record drawings of the installed work; in accordance with requirements of Division 1.

1.08 OPERATION AND MAINTENANCE DATA

A. Submit operation and maintenance manuals for all equipment and materials specified herein.

B. Description of function, normal operating characteristics and limitations, performance curves, engineering data and tests, and complete nomenclature and commercial numbers of all replaceable parts.

C. Manufacturer's printed operating procedures to include start-up, break-in, routine and normal operating instructions; regulation, control, stopping, shut-down, and emergency instructions.

D. Maintenance procedures for routine preventative maintenance and troubleshooting; disassembly, repair, and reassembly; aligning and adjusting instructions.

E. Servicing instructions and lubrication charts and schedules.

1.09 WARRANTIES

A. Refer to Division l for procedures and submittal requirements for warranties. Refer to individual equipment specifications for warranty requirements.

B. Compile and assemble the warranties into a separated set of vinyl covered, three ring binders, tabulated and indexed for easy reference.

C. Provide complete warranty information for each item to include product or equipment to include date of beginning of warranty or bond; duration of warranty or bond; and names, addresses, and telephone numbers and procedures for filing a claim and obtaining warranty services.

PART 2 - PRODUCTS (NOT APPLICABLE)

PART 3 - EXECUTION

3.01 ACCESSIBILITY AND CLEARANCES

A. Install equipment and materials to provide required access for servicing and maintenance. Coordinate the final location of concealed equipment and devices requiring access with final location of required access panels and doors. Allow ample space for removal of all parts that require replacement or servicing.

B. Maintain working space as required by NEC 110.26 for live electrical components as follows:
   a. Width: 30”
   b. Height: 6’-6” or height of equipment.
   c. Depth:
      i. 0-150V to ground: 3’-0”
      ii. 151-600V to ground, insulated/ungrounded parts other side: 3’-0”
      iii. 151-600V to ground, grounded parts other side: 3’-6”

iv. 151-600V to ground, live parts both sides: 4'-0"

3.02 INSTALLATIONS

A. Coordinate equipment and materials installation with other building components.

B. Verify all dimensions by field measurements.

C. Arrange for chases and openings in other building components to allow for installations.

D. Coordinate the installation of required supporting devices and sleeves to be set in poured in place concrete and other structural components, as they are constructed.

E. Sequence, coordinate, and integrate installations of materials and equipment for efficient flow of the work. Give particular attention to large equipment requiring positioning prior to closing-in the building.

F. Coordinate the cutting and patching of building components to accommodate the installation of equipment and materials.

G. Where mounting heights are not detailed or dimensioned, install overhead and materials to provide the maximum headroom possible.

H. Install equipment to facilitate maintenance and repair or replacement of equipment components. As much as practical, connect equipment for ease of disconnecting, with minimum of interference with other installations.

I. Coordinate the installation of materials and equipment above ceilings with suspension system, light fixtures, and other installations.

J. Coordinate connection of systems with exterior underground and overhead utilities and services. Comply with requirements of governing regulations and controlling agencies. Provide required connection for each service.

3.03 CUTTING AND PATCHING

A. This Article specifies the cutting and patching of equipment, components, and materials to include removal and legal disposal of selected materials, components, and equipment.

B. Refer to the Division 1 Sections for general requirements for cutting and patching.

C. Do not endanger or damage installed work through procedures and processes of cutting and patching.

D. Arrange for repairs required to restore other work, because of damage caused as a result of the installations.

E. No additional compensation will be authorized for cutting and patching work that is necessitated by ill-timed, defective, or non-conforming installations.

F. Perform cutting, fitting, and patching of equipment and materials required to:

1. Uncover work to provide for installation of ill-timed work;
2. Remove and replace defective work;
3. Remove and replace work not conforming to requirements of the contract documents;
4. Remove samples of installed work as specified for testing;
5. Install equipment and materials in existing structures;
6. Upon written instructions from the Owner, uncover and restore work to provide for the Owner's observation of concealed work.

G. Cut, remove and legally dispose of selected equipment, components, and materials as indicated, including, but not limited to removal of piping, valves, trim, and other items made obsolete by the new work.

H. Protect the structure, furnishings, finishes, and adjacent materials not indicated or scheduled to be removed.

I. Provide and maintain temporary partitions or dust barriers adequate to prevent the spread of dust and dirt to adjacent areas.

J. Locate, identify, and protect mechanical and electrical services passing through remodeling or demolition area and serving other areas required to be maintained operational. When transit services must be interrupted, provide temporary services for the affected areas and notify the Owner prior to changeover.

END OF SECTION 230500

MP:xx

SECTION 230523

VALVES

PART 1 GENERAL

1.01 ABBREVIATIONS

A. IBBM: Iron body, bronze mounted.

B. OS&Y: Outside screw and yoke.

C. WOG: Water, oil, gas.

D. WSP: Working steam pressure.

1.02 SUBMITTALS

A. Product Data: Catalog sheets, specifications and installation instructions for each valve type.

B. Valve Schedule: List type of valve, manufacturer’s model number, and size for each service application.

C. Maintenance data for valves to include in the operation and maintenance manual specified in Division 1. Include detailed manufacturer's instructions on adjusting, servicing, disassembling, and repairing.

1.04 MAINTENANCE

A. Special Tools:
1. One wrench for each type and size wrench operated plug valve.
2. Two insert changing tools, and one spare insert for each self contained thermostatic radiator control valve.

PART 2 PRODUCTS

2.01 VALVES - GENERAL

A. Valve Standardization: Valves from one or more manufacturers may be used, however valves supplied for each specific valve type shall be the product of one manufacturer.

B. Valves shall be first quality, free from all imperfections and defects, with body markings indicating manufacturer and rating.

C. Valve parts of same manufacturer, size and type shall be interchangeable.

D. Manually operated gate, globe and angle valves shall be of rising stem type, unless otherwise specified.

E. Manually operated valves shall open in a counterclockwise direction by means of round ventilated type handwheels.
   1. Exception: Cross handle type handwheels are acceptable for valves up to 3 inches in size.

F. In open position, wedge and stem of gate valves shall clear the waterway completely.

G. Valves which use packing shall be capable of being packed when wide open and under full working pressure.

H. Size valves the same size as the piping in which they are installed, unless otherwise specified.

I. Provide manually operated gate and globe valves 8 inches in size and larger with valved by-pass incorporated in body of main valve when installed in piping systems operating at a pressure in excess of 125 psig WSP and as shown on the drawings. Service rating of by-pass valve shall be equal to or greater than main valve it is by-passing.
   1. Exception: Stop-check valves.

2.02 MATERIALS

A. Body:
   1. Cast Iron: ASTM A 126 66, Class B, higher strength cast iron.
   2. Bronze: For use up to 150 psig WSP, ASTM B 62 and over 150 psig to 300 psig WSP, ASTM B 61.
   3. Cast Steel: ASTM A 216 Grade WCB.
   4. Forged Steel: ASTM A 105 Grade 2.

B. Stem:
   1. Cast Manganese Bronze: ASTM B 584.
   2. Cast Silicon Brass: ASTM B 584.
   3. Rolled Silicon Brass: ASTM B 98 Alloy D.
   4. Rolled Aluminum Bronze: ASTM B 150 Alloy 1.
   5. Rolled Manganese Bronze: ASTM B 138 Alloy A (half hard).
   6. Naval Brass: ASTM B 21 Alloy A or Alloy C (hard).
   7. Carbon Steel: As specified for particular type of valve.
   8. Stainless Steel: As specified for particular type of valve.

C. Trim: As specified for particular type of valve.

2.03 GATE VALVES

A. Type A: 125 psig WSP, 200 psig WOG, bronze body, union bonnet, solid wedge disc, and threaded ends. Acceptable Valves: Crane428UB, Hammond IB617, Jenkins 47CU, Milwaukee 1152, Nibco T134, and Stockham B105.

B. Type C: 125 psig WSP, 200 psig WOG up to 12 inch size, and 150 psig WOG for 14 inch and 16 inch sizes; IBBM OS&Y, bolted bonnet, solid wedge disc, and threaded or flanged ends depending on size. Acceptable Valves: Crane 464-1/2 & 465-1/2, Hammond IR1140, Milwaukee F2885, Nibco T6170 & F6170, and Stockham G620 & G623

C. Type D: 125 psig WSP, 200 psig WOG, bronze body, threaded bonnet, solid wedge disc, and solder ends. Acceptable Valves: Crane 1330, Hammond IB635, Jenkins 991AJ, Milwaukee 149, Nibco S111, and Stockham B108.

D. Type E: 200 psig WSP, 400 psig WOG, bronze body, union or bolted bonnet, solid wedge disc, with monel, cupro-nickel alloy or stainless steel seat rings, and threaded ends. Acceptable Valves: Crane 424, Hammond IB650, Jenkins 2270UJ, Milwaukee 1174, Nibco T174SS, and Stockham B132.

E. Type G: 300 psig WSP, 600 psig WOG, bronze body, union or bolted bonnet, solid wedge disc, cupro-nickel alloy or stainless steel seat rings, and threaded ends. Acceptable Valves: Crane 634E, Hammond IB658, Jenkins 2280UJ, Milwaukee 1184, Nibco T174SS, and Stockham B145.

2.04 GLOBE AND ANGLE VALVES

A. Type J: 125 WSP, 200 psig WOG, bronze body, threaded bonnet, and threaded ends. Acceptable Valves: Crane 1, Hammond IB440 & IB463, Jenkins 101J, Milwaukee 502, Nibco T211 & T311, and Stockham B16.

B. Type K: 125 psig WSP, 200 psig WOG, IBBM OS&Y, bolted bonnet, and threaded or flanged ends depending on size. Acceptable Valves: Crane 351 & 353, Hammond IR116, Jenkins 613C & 615C, Milwaukee F2981, Nibco F718B & F818B, and Stockham G512, & G515.

C. Type M: 250 psig WSP, 500 psig WOG, IBBM OS&Y, bolted bonnet, renewable seat and disc, and threaded or flanged ends depending on size. Acceptable Valves: Crane 21E, Hammond IR313, Jenkins 923C, Milwaukee F2983, Nibco F768B & F869B, and Stockham F532.

D. Type N: 300 psig WSP, 600 psig WOG, bronze body, union bonnet, with 500 Brinell hardness stainless steel renewable plug, 500 Brinell hardness stainless steel replaceable seat ring, and threaded or flanged ends depending on size. Acceptable Valves: Crane 382P & 384P, Hammond

IB444, Jenkins 556P & 558P, Milwaukee 593A, Nibco T276AP & T376AP, and Stockham B74 & B274.

E. Type O: 125 psig, 200 psig WOG, bronze body, threaded bonnet, and solder ends. Acceptable Valves: Crane 1310, Hammond IB423, Jenkins 1200C, Milwaukee 1502, Nibco S211, and Stockham B17.

2.05 CHECK VALVES

A. Type S: 125 psig WSP, 200 psig WOG, bronze body, brass or bronze trim, horizontal swing, renewable and regrindable disc, and threaded ends. Face discs for cold water service with teflon. Acceptable Valves: Crane 37, Hammond IB940, Jenkins 4092, Milwaukee 509, Nibco T413Y, and Stockham B319Y.

B. Type T: 150 psig WSP, 300 psig WOG, bronze body, brass or bronze trim, horizontal swing, renewable and regrindable disc, and threaded ends. Face discs for cold water service with Buna-N or teflon. Acceptable Valves: Crane 137, Hammond IB944, Jenkins 4092 & 4037J, Nibco T4331, and Stockham B321.

C. Type U: 125 psig WSP, 200 psig WOG, bronze body, brass or bronze trim, horizontal swing, renewable and regrindable disc, and solder ends. Face discs for cold water service with teflon. Acceptable Valves: Crane 1340, Hammond IB912, Jenkins 4093, Milwaukee 1509, Nibco S413Y, and Stockham 309Y.

D. Type V: 125 psig WSP, 200 psig WOG, IBBM, horizontal swing, bolted bonnet, regrindable and renewable seat ring and disc, and threaded or flanged ends depending on size. Discs on valves 4 inch size and larger may be cast iron with bronze face. Acceptable Valves: Crane 372, & 373, Hammond IR1124, Jenkins 623CJ & 624CJ, Milwaukee F2974, Nibco F918, and Stockham G927 & G931.

E. Type W:
1. Globe Style Silent Check Valve: IBBM or semi-steel with bronze mounting, renewable seat and disc, 18-8 stainless steel spring, and flanged ends.
   a. Acceptable Valves (125 psig flange pressure rating): Apco Series 600, Combination Pump & Valve 20D, Hammond IR9354, Milwaukee 1800, Nibco F910, and Williams Hager 636.
   b. Acceptable Valves (250 psig flange pressure rating): Apco Series 600, Combination Pump & Valve 21D, Milwaukee 1800, Nibco F960, and Williams Hager 636.
2. Wafer Style Silent Check Valve: IBBM or semi-steel with bronze mounting, renewable seat and disc, 18-8 stainless steel spring, and flanged ends.

a. Acceptable Valves (125 psig flange pressure rating): Apco Series 300, Combination Pump and Valve 10D, Hammond IR9253, Milwaukee 1400, Nibco W910, and Williams Hager 329 & 375.
b. Acceptable Valves (250 psig flange pressure rating): Apco Series 300, Combination Pump and Valve 11D, Milwaukee 1400, Nibco W960, and Williams Hager 329 & 375.

F. Type X: 300 WSP, 600 psig WOG, bronze body, brass or bronze trim, horizontal swing, renewable and regrindable disc, and threaded ends. Face disc for cold water service with Buna-N or teflon. Acceptable Valves: Crane 76E, Hammond IB949, Jenkins 4962J, Milwaukee 507, Nibco T4731, and Stockham B375.

G. Type Y: 250 psig WSP, 500 psig WOG, IBBM, horizontal swing, bolted bonnet, regrindable and renewable seat ring and disc, and threaded or flanged ends depending on size. Discs on valves 4 inch size and larger may be cast iron with bronze face. Acceptable Valves: Crane 39E, Hammond IR322, Jenkins 339C, Milwaukee F2970, Nibco F968B, and Stockham F947.

H. Type Z: 125 psig flange pressure rating, cast iron body, wafer style, split clapper plate type with integral body seat ring, plain or flat face end connections, resilient Buna-N seal vulcanized to body seat ring; aluminum, bronze or stainless steel clapper plates; Type 316 stainless steel clapper springs and hinge pins; and nickel plated steel or stainless steel stop pieces. Acceptable Valves: Apco Series 9000, Nibco W920W, Stockham WG970, and Marlin Duo-Check II.

2.06 PLUG VALVES

A. Type AA: 200 psig WOG, lubricated type with standard port opening, cast iron or semi-steel body, sealed lubrication system with lubricant fitting and dial indicator, cylindrical plug or teflon tapered plug, lubricant grooves in body or plug, threaded or flanged ends depending on size, and capable of lubrication with valve under pressure and plug in any position.
1. Acceptable Valves:
a. 1/2 inch to 3 inch size: Homestead 611 & 612, Resun R1430 & R1431, and Rockwell 142 & 143.
b. 4 inch size: Homestead 611 & 612, , Resun R1430 & R1431, and Rockwell 142 & 143.
c. 5 inch size: Homestead 611 & 612, Resun R1431, and Rockwell 143.
d. 6 inch size: Homestead 611 & 612, , Resun R1431, and Rockwell 143.
e. 8, 10 & 12 inch sizes: Homestead 612G, Resun R1431WGA, and Rockwell 149.
2. Operators:
a. 6 inch size and Less: Wrench operator.

b. 8 inch size and Up: Worm gear operator.

B. Type AB: 100 psig WOG, gas cock type with cast iron or bronze body, bronze plug, square head, wrench operator, and threaded ends. Acceptable Manufacturers: Crane, Eclipse Combustion, and McDonald.

2.07 BUTTERFLY VALVES

A. Type BF: Iron body, flangeless wafer or lugged type, (lug for each bolt hole, drilled and tapped for cap screws), with replaceable reinforced resilient EPT (EPDM) seats, bronze or nickel plated ductile iron discs, phosphate coated steel or stainless steel stems, and raised necks able to accommodate 2 inches of insulation. Acceptable Manufacturers: Crane, Demco, De Zurik, Hammond, Keystone, Milwaukee, Nibco, Stockham, and Watts.
1. Pressure Ratings:
a. 12 inch size and Less: 200 psig WOG at 275 degrees F.
b. 14 inch size and Up: 150 psig WOG at 275 degrees F.

B. Type BF-HP: ANSI Class 150 lug style carbon steel body, stainless steel disc and stem, RTFE seats and bushings. Acceptable Manufacturers: Crane, Hammond, Keystone, Milwaukee, and Stockham.

C. Operators:
1. 6 inch size and Less: Manual actuator handles with external indication of disc position, and suitable means of locking actuator in any fixed position.
2. 8 inch size and Up: Worm gear operator.

2.08 COMBINATION BALANCING AND SHUT-OFF VALVES

A. Heavy duty brass construction of angle or straightway pattern with 200 psig working water pressure at 250 degrees F, one union connection and one threaded or solder end, visible graduated dial indicator, memory stop, and wheel handle with full turn opening. Acceptable Manufacturers: Dunham-Bush, and Spirax Sarco.

2.09 REFRIGERANT VALVES

A. Type BVR Refrigerant ball valve: Full port, hermetically welded, forged brass with copper tube extensions intended for use with refrigerants specified, teflon seats, polished brass ball, teflon seals, and flared or brazed ends. 500 psig CWP, UL listed. Provide with access fitting. Acceptable Manufacturers: Mitsubishi, Daikin, Apollo 79 series, or equal.

2.11 WATER PRESSURE REDUCING VALVES

A. Cold Water Make-Up Service:

1. Adjustable direct acting, spring loaded, diaphragm operated, single seat type conforming to ASSE 1003 - Performance Requirements for Water Pressure Reducing Valves for Domestic Water Supply Systems. Acceptable Manufacturers: Bell & Gossett, Watts, and Wilkins.
   a. Body: Brass or bronze construction.
   b. Wetted Parts: Brass, bronze, stainless steel, or nickel alloy construction.
   c. Renewable seat and removable composition disc.
   d. Integral low inlet pressure check valve.
   e. Operating Temperature Range: 33-160 degrees F.
   f. Maximum Working Pressure: 125 psi.
2. Pressure reducing valves with integral strainers may be substituted for approval, in lieu of separate valve and strainer, if integral strainer and valve meet individual valve and strainer specifications.

2.13 SAFETY AND RELIEF VALVES

A. General Requirements: Valves shall be as specified by ASME Code governing manufacture of such valves within scope of their particular usage, i.e., Heating Boilers, Power Boilers, Unfired Pressure Vessels, etc., shall be tested, rated and listed by National Board of Boiler and Pressure Vessel Inspections and shall bear symbol of ASME and NBB and PVI, unless otherwise specified. Liquid relief valves do not require ASME tagging or marking, or NBB and PVI Certification. Valves for applications specified shall conform to the ASME Code, Section IV, Heating Boilers and the following:
   1. Valves for hot water heating boilers shall conform to the requirements of the ASME Code and have a maximum pressure setting of 30 psig. Valves shall be of Safety Relief type, i.e., shall lift slowly to relieve normal thermal pressure build-up and “pop” to relieve excessive pressure due to “runaway” conditions, caused by the failure of any pressure control device and shut-down firing mechanism on excessive pressure indication. Valve bodies shall be bronze or cast iron, with non-vulcanizing synthetic discs and with seats of bronze.
   2. Valves for direct fired domestic hot water boilers shall conform to requirements of ASME Code, Section IV, Paragraph HG 400.2 (a). Valves shall be of temperature-pressure type, rated at 125 psig test pressure. Thermostatic element shall, on rising temperature, cause the valve to open at 188 degrees F. and valve shall deliver its rated capacity at 208 degrees F. and close drip tight at 183 degrees F. Valves for use on gas fired heaters shall be AGA approved and shall be so stamped or marked.
   3. Valves for combination domestic hot water heater and storage tanks shall conform to the requirements of ASME Code, Section IV and USA Standard Z21.22 and shall be NBB listed. Valves

shall be of the temperature - pressure type. Thermostatic element shall, on rising temperature, cause the valve to open at 200 degrees F. and valve shall deliver its rated capacity at 210 degrees F. and close drip tight at 195 degrees F. Valves shall be sized in accordance with Unfired Vessel Code.

4. Valves for Unfired Pressure Vessels: Safety and safety relief valves on secondary side of unfired pressure tanks, water heaters and heat exchangers shall comply with Code requirements governing applicable equipment as outlined in ASME Code, Section IV, Article 4, Paragraph HG 400.3 and as follows: Secondary side of heat exchanger shall be protected by officially rated valves, set for same pressure or temperature as heretofore specified, when secondary side furnishes steam or hot water for purpose equivalent to purposes for which a boiler would be installed; valves for this purpose shall be sized in accordance with Unfired Vessel Code.
5. End Connections: Unless otherwise specified, safety valves, relief valves and safety relief valves, in sizes 3/4 inch to 3 inches IPS inclusive, may be furnished with male or female pipe thread inlet and female pipe thread outlet; valves over 3 inches IPS must be furnished with 125 lb. or 250 lb. flanged inlet and may be equipped with female threaded or 125 lb. flanged outlet.

2.14 NEEDLE STOP VALVES

A. For Temperatures to 300 degrees F.: All brass or forged carbon steel construction, union bonnet, screwed ends, built for 1000 psi at 300 degrees F.

B. For Temperature in Excess of 300 degrees F.: Carbon steel bar stock bodies, stainless steel stems, screwed ends, built for 4,500 psi at 450 degrees F.

C. For Use In High Temperature Water Piping: Carbon steel bar stock or forged steel bodies, stainless steel stems, screwed ends, built for 4,500 psi at 450 degrees F.

D. Acceptable Manufacturers: Marsh Instrument Company, Singer-American Meter Division, H.O. Trerice Co. and Weksler Instruments Corp.

2.15 GAGE COCKS

A. Gage Cocks: All brass construction, “T” or lever handles, screwed ends, built for 300 psig hydraulic pressure. Acceptable Manufacturers: Marsh Instrument Company, Mueller Instruments Co., H.O. Trerice Co. and Weksler Instruments Corp.

2.16 GROOVED END VALVES

A. Valves shall be of type, material and pressure rating, as required by the particular application, as approved.

2.17 VACUUM RELIEF VALVES

A. For Use With Steam:
   1. Up to 15 psig: ITT Hoffman No. 62, and Watts Regulator Co. No. N36.
   2. 16 psig to 150 psig: ITT Hoffman No. 62.

B. For Use With Water: Watts Regulator Co. No. N36.

2.18 BALL VALVES

A. Type BV: 150 psig WSP, 600 psig WOG, 2-piece full port, bronze body, solid blow-out proof stem, teflon seats, chrome plated brass ball, teflon seals, corrosion resistant steel lever handles with vinyl grips and threaded, solder, or press-fit ends. Acceptable Manufacturers: Apollo, Hammond, Milwaukee, Nibco, and Watts.
   1. Valve Option: Extended Stem.
   2. Ball Valves for Press-fit Copper Fittings shall be two-piece bronze or brass body with full port, chrome or brass plated ball, blow-out proof stem and PTFE or RTFE seats, rated at 250 psi minimum with press fitting ends. Ball Valves shall be Viega Model 2970.10, NIBCO PC585-70; Apollo Valves 77W-140 Series or Jomar Valve JP-100. Ball valves shall have a metal lever handle.

2.19 SELF CONTAINED THERMOSTATIC RADIATOR CONTROL VALVE

A. Type: NPT Nickel-plated forged brass body with union outlet, EPDM disc, stainless steel spindle, replaceable insert, actuators capable of being changed without draining the system, valve mounted setting knob and remote temperature sensor (46 - 80 Degree F range), brass sensor with sensor guard, stainless steel capillary tube, fully automatic- non electric, long term tested to 5000 cycles (1.3 Degree F).
   1. Pressure Ratings:
      a. Maximum WaterTemperature: 250 degrees F.
      b. Maximum Steam Pressure: 15 psig.
      c. Max. Static Pressure: 145 psi
      d. Max. Differential Pressure: 20 psi (Sized for 5 psi pressure drop at design flow)
   2. Valve Coefficients (Cv):
      a. 1/2 inch body size: 1.8
      b. 3/4 inch body size: 2.5
      c. 1 inch body size: 2.74
      d. 1-1/4 inch body size: 5.0

B. Acceptable Manufacturer: MACON CONTROLS, 118 Exchange Street, Chicopee, MA, 01013, (413) 594-8695.

PART 3 EXECUTION

3.01 INSTALLATION

A. General: Install valves at locations noted on the drawings or specified. In addition, comply with the following requirements:

1. Install valves where required for proper operation of piping and equipment including valves in branch lines where necessary to isolate sections of piping. Locate valves so as to be accessible and so that separate support can be provided when necessary.

2. Install valves with stems pointed up, in vertical position where possible, but in no case with stems pointed downward from horizontal plane unless unavoidable. Non-rising stem valves shall be used only where headroom prevents full extension of rising stems. Install valve drains with hose-end adapter for each valve that must be installed with stem below horizontal plane.

3. Install gate valves for shut-off; to isolate equipment, parts of systems, and vertical risers and any banked system of coils and to separate each coil.

4. Hose gate valves: Provide hose gate valves to drain the pipe at the low points of the system.

5. Install globe for throttling service and control device.

6. Provide 1" gate vent valves at all high points in the piping system.

7. Provide lift check valves at the discharge of all pumps as shown on the Drawings.

8. Outside Screw and Yoke Type: Gate valves in lines leading from the boilers to the boiler steam header, in boiler blow-off lines, and at other points so specified or shown on the drawings shall have outside screw and yoke (OS&Y) with bronze rising stem.

B. Insulation: Where insulation is indicated, install extended-stem valves, arranged in proper manner to receive insulation.

C. Mechanical Actuators: Install mechanical actuators with chain operators where indicated on the drawings and wherever valves are installed more than 8’-0” above the floor (except for valves concealed above ceilings).

Extend chains to about 5'-6" above the floor and hook to clips to clear aisle passage or provide chain buckets (Babbitt Bucket or equal).

D. Shutoff valves shall be installed on the supply and return side of all heat exchangers.

E. Shutoff valves shall be installed on the building supply and return of central utility systems and district heating and cooling systems.

F. Shutoff valves shall be installed on the connection to any pressure vessel.

G. Shutoff valves shall be installed on both sides of a pressure-reducing valve.

H. Shutoff valves shall be installed on connections to mechanical equipment and appliances.

3.02 MANUAL CONTROL VALVES FOR DIRECT RADIATION

A. Provide manually operated valve for each cast iron radiator, convector or finned type radiator. Do not install manually operated valves on any standing radiation, which is provided with an individual automatic temperature control valve.

B. Hot Water Application:
   1. Install globe, angle or straight-way type radiator valves for all hot water radiation. Where a regular globe or angle type valve cannot be used, install an offset body globe or offset corner pattern valve. Size valve full size of supply run out serving each heating unit.
   2. Install balancing fittings, full size of runouts, on all standing hot water radiation, whether or not provided with an automatic temperature control valve. Install balancing fittings in the returns only, of radiation installed in series.

3.04 DISCHARGE PIPING FROM LIQUID RELIEF VALVES

A. Connection vent piping to the discharge outlet of all relief valves and terminate over floor drain, bell outlet or other approved point of waste.

3.05 VALVE APPLICATION SCHEDULE

A. Schedule of valve applications for the different services is as follows:

   1. Cold Water in Buildings (CW) 125 psig and less:
      a. 3 inches and Less: Solder end, D gates or BV or BVP balls, 0 globe or angles and U checks, or flanged end, C gates, K globe or angles and V checks, with solder joint companion flanges.
      b. 4 inches and Up: Flanged end, C gates or BF butterflies, K globe or angles and V checks.

2. Gas - Natural, Manufactured or Mixed Fuel (G) 125 psig and less:
   a. 2 inches and Less: Screwed end, AB plug valves.
   b. 2-1/2 inches and Up: Flanged end, AA plug valves.
3. Gas, Underground (G): Dresser end, AA plug valves.
4. Hot Water (HWS & HWR) 125 psig and less:
   a. 3 inches and Less: Screwed, solder, or press-fit ends, A or D gates or BV balls, J or 0 globe or angles and S or U checks.
   b. 4 inches and Up: Flanged end, C gates or BF butterflies, K globe or angles and S checks.
5. Hot Water (HWS & HWR) 126 to 250 psig: Flanged end, F or G gates or BF-HP butterflies, M globe or angles and X or Y checks.
6. Instrument Air (IA) 60 psig and less, 1 inch and less: Screwed end, A gates and J globe or angles, with flared or ferrule copper tubing adapters.
7. Refrigerants - 700 psig and less, Up to 3 1/8 inches O.D.: Brazed or flared end BVR ball valve.

END OF SECTION

MP:xx

SECTION 230529

PIPE HANGERS AND SUPPORTS

PART 1 - GENERAL

1.01 SUBMITTALS

A. Shop Drawings:

1. Details of trapeze hangers and upper hanger attachments for piping 4 inches in diameter and over. Include the number and size of pipe lines to be supported on each type of trapeze hanger.
2. Details of pipe anchors.

B. Product Data: Catalog sheets, specifications and installation instructions for each item specified except fasteners.

PART 2 - PRODUCTS

2.01 PIPE HANGERS AND SUPPORTS

A. Combination clevis hanger, pipe insulation shield and vapor barrier jacketed high density insulating saddle with companion high density filler piece.

1. Insulating saddles and filler pieces shall be of the same thickness and materials as the adjoining pipe insulation. Saddles shall cover the lower 180 degrees of the pipe or tubing, and companion filler pieces shall cover the upper 180 degrees of the pipe or tubing. Physical sizes, gages, etc. of the components of insulated hangers shall be in accordance with the following schedule:

PIPE OR TUBING SIZE (Inches)	SHIELD LENGTH (Inches)	SHIELD GAGE	SADDLE LENGTH (Inches)	VAPOR BARRIER JACKET LENGTH (Inches)
UP to 2-1/2	4	16	6	10
3 to 6	4	14	6	10
8 to 14	10	12	12	16
16 and up	10	10	12	16

B. Pipe Insulation Shields: Fabricated of steel, with a minimum arc of 180 degrees, unless otherwise indicated. Shields for use with hangers and supports, with the

exception of combination clevis type hangers, shall be in accordance with the following schedule:

PIPE OR TUBING SIZE (Inches)	SHIELD LENGTH (Inches)	SHIELD GAGE
Up to 2-1/2	8	18
3 to 8	10	16
10 to 14	12	12
16 and up	18	10

C. Pipe covering Protection Saddles: 3/16 inch thick steel, of sufficient depth for the insulation thickness specified, notched so that saddle contact with the pipe is approximately 50 percent of the total axial cross section. Saddles for pipe 12 inches in size and larger shall have a center support.

PIPE SIZE (Inches)	SADDLE LENGTH (Inches)	SADDLE GAGE
8” and up	12”	7 (3/16”)

D. Pipe Hangers: Height adjustable standard duty clevis type, with cross bolt and nut. Pipe spreaders or spacers shall be used on cross bolts of clevis hangers, when supporting piping 10 inches IPS and larger.

1. Swivel ring type hangers will be allowed for sprinkler piping up to a maximum of 2 inches in size.

E. Adjustable Floor Rests and Base Flanges: Steel

F. Hanger Rods: Mild, low carbon steel, fully threaded or threaded at each end, with two nuts at each end for positioning rod and hanger, and locking each in place.

G. Riser Clamps: Malleable iron or steel.

H. Adjustable Roller Hangers (MSS Type 43): For suspension of pipes, 2-1/2 to 20 inches, from single rod if horizontal movement caused by expansion and contraction might occur.

I. Adjustable Pipe Roll and Base Units (MSS Type 46): For support of pipes, 2 to 30 inches, if vertical and lateral adjustment during installation might be required in addition to expansion and contraction

J. Restraints, Anchors, and Supports for Grooved End Piping Systems: As recommended by the grooved end fitting manufacturer.

K. Foam Insulated Pipe Hanger: Single-piece thermally insulated pipe hanger with self-adhesive closure. CFC-free PET load-bearing segments embedded in closed cell insulation with outer shell of 30-mil thick painted aluminum.

2.02 FASTENERS

A. Sleeve Anchors (Group II, Type 3, Class 3): Molly's Div./USM Corp. Parasleeve Series, Ramset's Dynabolt Series, or Red Head/Phillips AN1405, HN-1614, FS-1411 Series.

B. Wedge Anchors (Zinc Plated, Group II, Type 4, Class 1): Hilti's Kwik Bolt Series, Molly's Div./USM Corp. Parabolt PB Series, Ramset's Trubolt T Series, or Red Head/Phillips WS-3822.

C. Self-Drilling Anchors (Group III, Type 1): Ramset's RD Series, or Red Head/Phillips Series S-14.

D. Non-Drilling Anchors (Group VIII, Type 1): Ramset's Dynaset DS Series, Hilti's HDI Series, or Red Head/Phillips J Series.

E. Stud Anchors (Group VIII, Type 2): Red Head/Phillips JS-38 Series.

F. Continuous Slotted Type Concrete Insert, Galvanized:

1. Load Rating 800 lbs/ft: Kindorf's D-986.
2. Load Rating 1500 lbs/ft: Kindorf's D-980.
3. Load Rating 3000 lbs/ft: Hohmann & Barnard's Inc. Type CS-H.
4. Load Rating 4500 lbs/ft: Hohmann & Barnard's Inc. Type CS-HD.

G. Threaded Type Concrete Insert: Galvanized ferrous castings, internally threaded to receive 3/4 inch dia machine bolts.

H. Wedge Type Concrete Insert: Galvanized box-type ferrous castings, designed to accept 3/4 inch dia bolts having special wedge shaped heads.

I. Bolts, Nuts, Washers, Lags, and Screws: Medium carbon steel; size and type to suit application; galvanized for high humidity locations, and treated wood; plain finish for other interior locations. Except where shown otherwise on the Drawings, furnish type, size, and grade required for proper installation of the Work.

2.03 SHOP PAINTING AND PLATING

A. Hangers, supports, rods, inserts and accessories used for pipe supports, unless chromium plated, cadmium plated or galvanized shall be shop coated with zinc chromate primer paint. Electroplated copper hanger rods, hangers and accessories may be used with copper pipe or copper tubing.

B. Hanger supports for chromium plated pipe shall be chromium plated brass.

PART 3 - EXECUTION

3.01 PREPARATORY WORK

A. Place inserts into construction form work expeditiously, so as not to delay the work.

3.02 INSTALLATION

A. Do not hang or support one pipe from another or from ductwork.

B. Support all insulated horizontal piping by means of hangers or supports with insulation shields installed outside of the insulation.

C. Space hangers or supports for horizontal piping on maximum center distances as listed in the following hanger schedules, except as otherwise specified, or noted on the Drawings.

1. For Steel, Alloy Steel, and Fibrous glass Reinforced Plastic Pipe (FRP):

Pipe Size (Inches)	Maximum Spacing (Feet)
1 and under	8
1-1/4 and 1-1/2	9
2	10
2-1/2 and over	12

2. For Copper Pipe and Copper Tubing:

PIPE OR TUBING SIZE (Inches)	MAXIMUM SPACING (Feet)
3/4 and under	5
1-1/4	6
1-1/2 and over	8

3. For Directional Changes: Install a hanger or support close to the point of change of direction of all pipe runs in either a horizontal or vertical plane.
4. For Concentrated Loads: Install additional hangers or supports, spaced as required and directed, at locations where concentrated loads such as in-line pumps, valves, fittings or accessories occur, to support the concentrated loads.
5. For Branch Piping Runs and Runouts over 5 Feet in Length: Install a minimum of one hanger, and additional hangers if required by the hanger spacing schedules.
6. Parallel Piping Runs: Where several pipe lines run parallel in the same

plane and in close proximity to each other, trapeze hangers may be submitted for approval. Base hanger spacing for trapeze type hangers on the smallest size of pipe being supported. Design the entire hanger assembly based on a safety factor of five, for the ultimate strength of the material being used.

D. Size hanger rods in accordance with the following:

PIPE OR TUBING SIZE (Inches)	SINGLE ROD HANGER SIZE (Inches)		DOUBLE ROD HANGER SIZE (Inches)	
	Pipe	Tubing	Pipe	Tubing
1/2 to 2	3/8	1/4	3/8	1/4
2-1/2 and 3	½	3/8	3/8	1/4
4 and 5	5/8	1/2	1/2	3/8
6	¾	1/2	5/8	1/2
8, 10 and 12	7/8	5/8	3/4	5/8

1. Secure hanger rods as follows: Install one nut under clevis, angle or steel member; one nut on top of clevis, angle or steel member; one nut inside insert or on top of upper hanger attachment and one nut and washer against insert or on lower side of upper hanger attachment. A total of four nuts are required for each rod, two at upper hanger attachment and two at hanger.

E. Vertical Piping:

1. Support vertical risers of piping systems, by means of heavy duty hangers installed close to base of pipe risers, and by riser clamps with extension arms at intermediate floors, with the distance between clamps not to exceed 10 feet on copper pipe and 15 feet on steel pipe, unless otherwise specified. Support pipe risers in vertical shafts equivalent to the aforementioned. Install riser clamps above floor slabs, with the extension arms resting on floor slabs. Provide adequate clearances for risers that are subject to appreciable expansion and contraction, caused by operating temperature ranges.
2. Support extension arms of riser clamps, secured to risers to be insulated for cold service, 4 inches above floor slabs, to allow room for insulating and vapor sealing around riser clamps.

F. Floor Supports: Install adjustable yoke rests with base flanges, for the support of piping, unless otherwise indicated on the Drawings. Install supports in a manner, which will not be detrimental to the building structure.

3.03 UPPER HANGER ATTACHMENTS

A. General:

1. Do not use drive-on beam clamps.
2. Do not support piping over 4 inches in size from steel bar joists. Secure upper hanger attachments to steel bar joists at panel points of joists.
3. Do not drill holes in main structural steel members.
4. "C" clamp type of upper hanger attachments with restraining straps may be used as upper hanger attachments for the support of piping up to a maximum of 3 inches in size and a temperature from 50 degrees F to 200 degrees F.

B. Attachment to Steel Frame Construction: Provide intermediate structural steel members where required by pipe support spacing. Select steel members for use as intermediate supports based on a minimum safety factor of five.

1. Do not use drive-on beam clamps.
2. Do not support piping over 4 inches in size from steel bar joists. Secure upper hanger attachments to steel bar joists at panel points of joists.
3. Do not drill holes in main structural steel members.
4. "C" clamp type of upper hanger attachments with restraining straps may be used as upper hanger attachments for the support of piping up to a maximum of 3 inches in size and a temperature from 50 degrees F to 200 degrees F.

C. Attachment to Concrete Filled Steel Decks (Total thickness, 2-1/2 inches or more): Where necessary, attach hangers to the deck with welding studs (except at roof decks), thru-bolts with fish plates or tee hangers. Do not support a load, in excess of 250 lbs from any single welded stud**.**

D. Attachment to Cast-In-Place Concrete: Secure to overhead construction by means of cast-in-place concrete inserts.

E. Attachment to Existing Cast-In-Place Concrete:

1. For piping up to a maximum of 4 inches in size, secure hangers to overhead construction with self-drilling type expansion shields and machine bolts.
2. Secure hangers to wall or floor construction with single unit expansion shields or self-drilling type expansion shields and machine bolts.

F. Attachment to Cored Precast Concrete Decks (Flexicore, Dox Plank, Spancrete, etc.): Secure attachments to structural steel wherever possible. When fill is applied over decks, thru-bolts and fish plates may be used to support piping up to a maximum of 4 inches in size; mechanically expanded rod hangers or toggle bolts may be installed in cells for the support of piping up to a maximum of 2-1/2 inches in size.

G. Attachment to Hollow Block or Tile Filled Concrete Decks: Secure hangers to structural steel wherever possible. Inserts may also be used by omitting a block and pouring a solid concrete block, with a cast-in-place insert where required.

H. Attachment to Waffle Type Concrete Decks: Provide cast-in-place inserts where required. When fill is applied over deck, thru-bolts and fish plates may be used.

I. Attachment to Precast Concrete Tee Construction:

1. Secure hangers to tees by any of the following methods:
   a. Tee hanger inserts between adjacent flanges.
   b. Thru-bolts and fish plates, except at roof deck without concrete fill.
   c. Dual unit expansion shields in webs of tees. Install shields as high as possible in the webs.
2. Exercise extreme care in the field drilling of holes to avoid damage to reinforcing.
3. Do not use powder driven fasteners.

J. Attachment to Wood Construction: Secure hangers to the sides (only) of wood members, by means of malleable iron side beam connectors, or malleable iron or steel side beam brackets. Do not secure hanger attachments to nailing strips resting on top of steel beams.

1. Secure side beam connectors to wood members with two No. 18 x 1-1/2 inch long wood screws, or two No. 16 x 1-1/2 inch long drive screws. Do not support piping over 1-1/2 inches in size from side beam connectors. Do not hammer in wood screws.
2. Secure side beam brackets to wood members with steel bolts or lag screws. Do not use lag screws in wooden members having a nominal thickness (beam face) under 2 inches in size. Install bolts or lag screws, in the sides of a timber or a joist, at the mid-point or above, not less than 2-1/2 inches from the lower edge when supporting branch lines and not less than 3 inches from the lower edge when supporting mains. Install heavy gage steel washers under all nuts.
3. Secure side beam brackets to wooden beams or joists, with lag screws or bolts of size as follows:

PIPE SIZE (Inches)	LAG SCREW SIZE (Inches)	BOLT DIAMETER (Inches)
2 and under	3/8 diam x 1-3/4	3/8
2-1/2 and 3	1/2 diam x 2	1/2
4 and 5"	Use bolt	5/8

   a. Do not support piping larger than 3 inches with lag screws. Pre-drill holes for lag screws 1/8 inch in diameter less than the root diameter of the lag screw thread.
   b. The minimum width of the lower face of wood beams or joints in which lag screws of size as specified may be used is as follows:

LAG SCREW DIAMETER (Inches)	NOMINAL WIDTH OF BEAM FACE (Inches)
3/8	2
1/2	3

4. Do not secure hanger attachment to the diagonals or vertical members of the trusses.

3.04 ANCHORS, RESTRAINTS, RIGID SUPPORTS, STAYS AND SWAY BRACES

A. Install pipe anchors, restraints and sway braces, at locations noted on the Drawings. Design anchors so as to permit piping to expand and contract freely in opposite directions, away from anchor points. Install anchors independent of all hangers and supports, and in a manner which will not affect the structural integrity of the building.

3.05 COMBINATION CLEVIS HANGER, PIPE INSULATION SHIELD AND VAPOR BARRIER JACKETED HIGH DENSITY INSULATING SADDLES

A. Install a combination clevis hanger, pipe insulation shield and vapor barrier jacketed high density insulating saddles, at all points of support for piping or tubing to be insulated for cold and hot service insulated piping. Direct hanger contact of pipe for hot or cold piping is not allowed. Furnish companion high density vapor barrier jacketed saddle pieces, of the same material, thickness and length, for installation over the top 180 degree surface of pipe or tubing, at each point of support where an insulated clevis hanger is utilized.

3.06 PIPE SUPPORT FOR SYSTEMS INSULATED WITH FLEXIBLE ELASTOMERIC FOAM

A. Install a single-piece thermally insulated pipe hanger with self-adhesive closure at all points of support for piping or tubing to be insulated for cold and hot service insulated piping. Direct hanger or clamp contact of pipe for hot or cold piping is not allowed.

3.07 PIPE INSULATION SHIELDS

A. Install a pipe insulation shield (unless provided with a combination clevis hanger as described above) at all points of support, for cold and hot service insulated piping. Direct hanger contact of pipe for hot or cold piping is not allowed. Center shields on all hangers and supports, and install in such a manner so as not to cut, puncture or compress insulation.

3.08 PIPE COVERING PROTECTION SADDLES

A. Install pipe covering protection saddles at all points of support, for steel piping 6 inches in size and larger, insulated with hot service insulation. Weld saddles to

piping to insure movement with pipe.

END OF SECTION 230529

MP:xx

SECTION 230550

VIBRATION ISOLATION

PART 1 - GENERAL

1.01 DESCRIPTION

A. Furnish and install vibration control devices, materials, and related items. Perform all work as shown on the drawings and as specified herein to provide complete vibration isolation systems in proper working order.

1.02 SUBMITTALS

A. Refer to related sections elsewhere for procedural instructions for submittals.

B. Before ordering any products, submit shop drawings of the items listed below. The shop drawings must be complete when submitted and must be presented in a clear, easily understood form. Incomplete or unclear presentation of shop drawings may be reason for rejection of the submittal.

1. A complete description of products to be supplied, including product data, dimensions, specifications, and installation instructions.
2. Detailed selection data for each vibration isolator supporting equipment, including:
   a. The equipment identification mark;
   b. The isolator type;
   c. The actual load;
   d. The static deflection expected under the actual load;
   e. The specified minimum static deflection.
3. Steel rails, steel base frames, and concrete inertia bases showing all steel work, reinforcing, vibration isolator mounting attachment method, and location of equipment attachment bolts.
4. Special details necessary to convey complete understanding of the work to be performed.

1.03 MATERIAL AND EQUIPMENT

A. All vibration isolation mounts shall be supplied by one of the following acceptable manufacturers:

Amber/Booth Co. (Houston, TX..... A.B.
AVNEC Incorporated (Floral Park, NY) ..... CA.I.
Mason Industries Inc. (Hauppaughe, NY) ..... M.I.
Kinetics Noise Control Inc. (Dublin, OH). .....K.N.C.
Vibration Mountings & Controls Inc. (Butler, NJ) ..... V.M.C.

B. Unless otherwise specified, supply only new equipment, parts and materials.

C. Substitutions of equal equipment beyond the alternatives listed will be permitted

only with the written permission of the Engineer. Accompany each request for acceptance of substitute equipment with manufacturer's certified data proving the equivalence of the proposed substitute in quality and performance. The Engineer shall be the final judge of the validity of the data submitted.

1.04 REQUESTS FOR CHANGE

A. Any requests for changes to the specifications must be submitted in writing at least ten days prior to bid closing. Approval will be given through a written addendum.

1.05 QUALITY ASSURANCE

A. Coordinate the size, location, and special requirements of vibration isolation equipment and systems with other trades. Coordinate plan dimensions with size of housekeeping pads.

B. Provide vibration isolators of the appropriate sizes, with the proper loading to meet the specified deflection requirements.

C. Supply and install any incidental materials such as mounting brackets, attachments and other accessories as may be needed to meet the requirements stated herein, even if not expressly specified or shown on the drawings, without claim for additional payment.

D. Verify correctness of equipment model numbers and conformance of each component with manufacturer's specifications.

E. Should any rotating equipment cause excessive noise or vibration when properly installed on the specified isolators, the Contractor shall be responsible for rebalancing, realignment, or other remedial work required to reduce noise and vibration levels. Excessive is defined as exceeding the manufacturer's specifications for the unit in question.

F. Upon completion of the work, Engineer shall inspect installation and shall inform installing contractor of any further work that must be completed. Make all adjustments as directed by Architect that result from the final inspection. Work shall be done before vibration isolation systems are accepted.

PART 2 - PRODUCTS

2.01 VIBRATION ISOLATOR TYPES

A. General

1. All springs installed out-of-doors shall be cadmium-plated, zinc electroplated or powder-coated after fabrication. Hardware and other metal parts shall be cadmium-plated or galvanized. Galvanizing shall meet ASTM Salt Spray Test Standards and Federal Test Standard No. 14.

2. All isolators installed out-of-doors shall have base plates with bolt holes for fastening the isolators to the support members.
3. Isolator types are scheduled to establish minimum standards. At the Contractor's option, labor-saving accessories can be an integral part of isolators supplied to provide initial lift of equipment to operating height, hold piping at fixed elevations during installation and initial system filling operations, and similar installation advantages. Accessories and seismic restraint features must not degrade the isolation performance of the isolators.
4. Static deflection of isolators shall be as provided in the EXECUTION section and as shown on the drawings. All static deflections stated are the minimum acceptable deflection for the mounts under actual load. Isolators selected solely on the basis of rated deflections are not acceptable and will be disapproved.

B. Type FSN (Floor Spring and Neoprene)

1. Spring isolators shall be freestanding and laterally stable without any housing. Spring diameter shall be not less than 0.8 of the compressed height of the spring at the rated load. Springs shall have a minimum additional travel-to-solid equal to 50% of the rated deflection. Springs shall be so designed that the ratio of horizontal stiffness to vertical stiffness is approximately 1 (one). All mounts shall have leveling bolts.
2. The spring element in the isolator shall be set in a neoprene cup and have a steel washer or a flat surface in contact with the neoprene to distribute the load evenly over the bearing surface of the neoprene. Alternatively, each isolator shall be mounted on a Type NP isolator. If the NP isolator is used, a rectangular bearing plate of appropriate size shall be provided to load the pad uniformly within the manufacturer's recommended range. If the isolator is to be fastened to the building and the NP isolator is used, GROMMETS shall be provided for each bolt hole in the base plate.
3. If the basic spring isolator has a neoprene friction pad on its base and an NP isolator is to be added to the base, a galvanized steel, stainless steel or aluminum bearing plate shall be used between the friction pad and the NP isolator. If the isolator is outdoors, bearing plates shall not be made of galvanized steel. The NP isolator, bearing plate and friction pad shall be permanently adhered to one another and to the bottom of the isolator base plate.
4. Type FSN isolators shall be one of the following products with the appropriate neoprene pad (if used) selected from Type NP or acceptable equal:

   Type SW ..... A.B.
   Type FSS .....A.I.
   Type SLF.....M.I.
   Type FDSK.....N.C.
   Series A.....V.M.&C.

C. Type FSNTL (Floor Spring and Neoprene Travel Limited)

1. Spring isolators shall be freestanding and laterally stable without any housing. Spring diameter shall be not less than 0.8 of the compressed height of the spring at the rated load. Spring shall have a minimum additional travel-to-solid equal to 50% of the rated deflection. Springs shall be so designed that the ratio of horizontal stiffness to vertical stiffness is approximately 1 (one). All mounts shall have leveling bolts. All mounts shall have vertical travel limit stops to control extension when weight is removed. The travel limit stops shall be capable of serving as blocking during erection of the equipment. A minimum clearance of 1/4" shall be maintained around restraining bolts and between the limit stops and the spring to avoid interference with the spring action.
2. The spring element in the isolator shall be set in a neoprene cup and have a steel washer or a flat surface in contact with the neoprene to distribute the load evenly over the bearing surface of the neoprene. Alternatively, each isolator shall be mounted on a Type NP isolator. If the NP isolator is used, a rectangular bearing plate of appropriate size shall be provided to load the pad uniformly within the manufacturer's recommended range. If the isolator is to be fastened to the building and the NP isolator is used, GROMMETS shall be provided for each bolt hole in the base plate.
3. If the basic spring isolator has a neoprene friction pad on its base and an NP isolator is to be added to the base, a galvanized steel, stainless steel or aluminum bearing plate shall be used between the friction pad and the NP isolator. If the isolator is outdoors, bearing plates shall not be made of galvanized steel. The NP isolator, bearing plate and friction pad shall be permanently adhered to one another and to the bottom of the isolator base plate.
4. Type FSNTL isolators shall be one of the following products, with the appropriate neoprene pad (if used) selected from Type NP or acceptable equal:

   Type CT ..... A.B.
   Type RS .....A.I.
   Type SLR ..... M.I.
   Type FLS.....K.N.C.
   Series AWR..... V.M.&C.

D. Type FN (Floor Neoprene)

1. Neoprene isolators shall be neoprene-in-shear type with steel reinforced top and base. All metal surfaces shall be covered with neoprene. The top and bottom surfaces shall be ribbed. Bolt holes shall be provided in the base and the top shall have a threaded fastener. The mounts shall include leveling bolts that may be rigidly connected to the equipment.
2. Type FN isolators shall be one of the following products or acceptable equal:

   Type RVD..... A.B.
   Type NCM .....A.I.
   Type ND ..... M.I.
   Type RD .....K.N.C.

Series RD.....V.M.&C.

E. Type PCF (Precompressed Fiberglass)

1. Precompressed fiberglass blocks shall be made of molded inorganic glass fiber that is individually coated and sealed with an impervious elastomeric membrane. Fiberglass shall be severely overloaded during manufacture to stabilize the material into a product that is permanent and has consistent, predictable dynamic properties.
2. Type PCF isolators shall be one of the following products or acceptable equal.

Type KIP .....K.N.C.

F. Type NP (Neoprene Pad)

1. Neoprene pad isolators shall be one layer of 1/4" to 3/8" thick ribbed or waffled neoprene. The pads shall be sized so that they will be loaded within the manufacturer's recommended range.
2. Type NP isolators shall be one of the following products or acceptable equal:

Type NR..... A.B.
Type NP .....A.I.
Type W.....M.I.
Type NPS.....K.N.C.
Series Shear Flex.....V.M.&C.

G. Type DNP (Double Neoprene Pad)

1. Neoprene pad isolators shall be formed by two layers of 1/4" to 3/8" thick ribbed or waffled neoprene, separated by a galvanized steel, stainless steel or aluminum plate. If the isolator is outdoors, the plate shall not be made of galvanized steel. These layers shall be permanently adhered together. The pads shall be sized so that they will be loaded within the manufacturer's recommended range.
2. Type DNP isolators shall be formed from one of the following products or acceptable equal:

Type NR..... A.B.
Type DNP.....A.I.
Type WSW.....M.I.
Type NPS.....K.N.C.
Series Shear Flex.....V.M.&C.

H. Type HSN (Hanger Spring and Neoprene)

1. Vibration isolation hangers shall consist of a free standing and laterally stable steel spring and a neoprene element in series, contained within a steel housing. Spring diameters and hanger housing lower hole sizes shall be large enough to permit the hanger rod to swing through a 30° arc

before contacting the housing. Alternatively, other provisions shall be made to allow for a 30° arc of movement of the bottom hanger rod without contacting the isolator housing. Spring diameter shall be not less than 0.8 of the compressed height of the spring at the rated load. Spring elements shall have a minimum additional travel-to-solid equal to 50% of the rated deflection. The neoprene element shall be designed to have a 0.3" minimum static deflection. The deflection of both the spring element and the neoprene element shall be included in determining the overall deflection of Type HSN isolators.

2. Type HSN isolators shall be one of the following products or acceptable equal:

Type BSRA ..... A.B.
Type SANSH.....A.I.
Type 30N..... M.I.
Type SRH or SFH .....K.N.C.
Type RSH or RFH .....V.M.&C.

I. Type HN (Hanger Neoprene)

1. Vibration isolation hangers shall consist of a neoprene-in-shear element contained within a steel housing. A neoprene neck bushing shall be provided where the hanger rod passes through the hanger housing to prevent the rod from contacting the hanger housing. The diameter of the hole in the housing shall be sufficient to permit the hanger rod to swing through a 30° arc before contacting the hanger housing.
2. Type HN isolators shall be one of the following products or acceptable equal:

Type BRD-A ..... A.B.
Type SANH .....A.I.
Type HD ..... M.I.
Type RH or FH .....K.N.C.
Type RHD or RFD .....V.M.&.C.

J. Type RI (Roof Isolator)

1. Roof isolators shall meet all of the requirements of the type FSNTL isolator, and shall be provided with waterproof spring covers that allow for the adjustment or removal of the springs. The isolators shall be provided with a structural top plate for the welding or bolting of supplementary support steel. The isolators shall accept 2 inch thick roofing insulation and be capable of being flashed directly into the roof membrane. Each isolator shall be provided complete with a wood nailer and flashing.
2. Type RI isolators shall be one of the following products or acceptable equal:

Type FRS.....A.I.

2.02 EQUIPMENT BASES

A. Type BSR (Base - Steel Rail)

1. Steel rail bases shall consist of structural steel sections sized to provide a rigid beam that will not twist, deform, or deflect in any manner that will negatively affect the operation of the supported equipment or the vibration isolation mounts. Rail bases shall include side mounting brackets for attachment of vibration isolators.
2. Type BSR bases will be supplied by the isolator manufacturer and shall be one of the following products or acceptable equal:

   Type C or CIS ..... A.B.
   Type SR .....A.I.
   Type R or ICS ..... M.I.
   Type KRB or KFB.....K.N.C.
   Type WFR or AR .....V.M.&C.

B. Type BSF (Base - Steel Frame)

1. Steel base frames shall consist of structural steel sections sized, spaced, and connected to form a rigid base which will not twist, rack, deform, or deflect in any manner which will negatively affect the operation of the supported equipment or the vibration isolation mounts. Frames shall be adequately sized to support basic equipment units and motors plus any associated pipe elbow supports, duct elbow supports, electrical control elements, or other components closely related and requiring resilient support in order to prevent vibration transfer to the building structure. The depth of steel frame bases shall be at least 1/10 the longest dimension of the base and not less than 6". The base footprint shall be large enough to provide stability for supported equipment.
2. Frame bases shall include side mounting brackets for attachment to vibration isolators. Mounting brackets shall be located on the sides of the base that are parallel to the axis of rotation of the supported equipment.
3. Type BSF bases shall be supplied by the isolator manufacturer and shall be one of the following products or acceptable equal:

   Type WX ..... A.B.
   Type SB .....A.I.
   Type WFSL ..... M.I.
   Type SFB or SRB.....K.N.C.
   Series WFB .....V.M.&C.

C. Type BIB (Base - Inertia Base)

1. Concrete inertia bases shall be formed of stone-aggregate concrete (150 lb./cu.ft.) and appropriate steel reinforcing cast between welded or bolted perimeter structural steel channels. Inertia bases shall be built to form a rigid base that will not twist, rack, deform, deflect, or crack in any manner that would negatively affect the operation of the supported equipment or the vibration isolation mounts. Inertia bases shall be adequately sized to support basic equipment units and motors plus any associated pipe elbow supports, duct elbow supports, electrical control elements, or other

components closely related and requiring resilient support in order to prevent vibration transfer to the building structure. Inertia base depth shall be at least 1/12 the longest dimension of the inertia base and not less than 6". The base footprint shall be large enough to provide stability for supported equipment. Inertia bases shall include side mounting brackets for attachment to vibration isolators. Mounting brackets shall be located on the sides of the base that are parallel to the axis of rotation of the supported equipment.

2. The steel frame and reinforcement shall be supplied by the vibration isolator manufacturer. Concrete may be provided by the General Contractor.
3. Frame and reinforcement for Type BIB bases shall be one of the following products or acceptable equal:

Type CPF ..... A.B.
Type CB .....A.I.
Type KSL ..... M.I.
Type CIB-L or CIB-H .....K.N.C.
Series WPF .....V.M.&C.

D. Type RC-1 (Roof Curb, Type 1)

1. Type RC-1 isolation bases shall be a prefabricated assembly consisting of an extruded aluminum frame and steel spring isolation system that fits over the roof curb and under the isolated equipment. The aluminum frame shall be sufficiently rigid to support the equipment load without detrimental twist or deflection. Spring isolators shall be selected and positioned along the curb to achieve the minimum static deflection called for in the schedule. The static deflection shall be constant around the entire periphery of the base. Springs shall be free standing, laterally stable with a diameter of not less than 0.8 times the compressed height, and have additional travel-to-solid that is at least 50% of the rated deflection. Resilient neoprene snubbers shall be provided at the corners of the base to limit the movement of the equipment under wind load to 1/4".
2. The isolation curb base shall be made weather tight by sealing all around the periphery with closed cell neoprene or flexible membrane that shall in no way inhibit the vibration isolation of the spring elements. A closed cell sponge gasket or field caulking shall be used between the equipment unit and the isolation curb base and between the isolation curb and roof curb to form a weather-tight seal. Each spring isolator used in the curbs shall be weather-protected as described in the PRODUCTS section under General.
3. Type RC-1 vibration isolation curb bases shall be supplied by the isolator manufacturer and shall be one of the following products or acceptable equal:

RTIR..... A.B.
Type CMAB.....M.I.
Type ASR.....K.N.C.
Series ATR.....V.M.&C.

E. Type RC-2 (Roof Curb, Type 2)

1. Type RC-2 isolation bases shall be a prefabricated assembly consisting of a structural steel frame and steel spring isolation system that forms the roof curb under the isolated equipment. The steel frame shall be sufficiently rigid to support the equipment load without detrimental twist or deflection. Spring isolators shall be selected and positioned along the curb to achieve the minimum static deflection called for in the schedule. The static deflection shall be constant around the entire periphery of the base. Springs shall be free standing, laterally stable with a diameter of not less than 0.8 times the compressed height, and have additional travel-to-solid that is at least 50% of the rated deflection. Spring elements shall include travel limit stops that are capable of serving as blocking during erection of the equipment. A minimum clearance of 1/4" shall be maintained around restraining bolts as they pass through the limit stop brackets. Springs and limits stops shall be adjusted to limit movement of the equipment under wind load to 1/4".
2. The isolation curb base shall be made weather tight by sealing all around the periphery with closed cell neoprene, flexible membrane or light gauge spring metal loop, which shall in no way inhibit the vibration isolation of the spring elements. A closed cell sponge gasket or field caulking shall be used between the equipment unit and the isolation curb base and between the isolation curb and roof curb to form a weather-tight seal. Each spring isolator used in the curbs shall be weather-protected as described in the PRODUCTS section under General.
3. Type RC-2 vibration isolation curb bases shall be supplied by the isolator manufacturer and shall be one of the following products or acceptable equal:

   Type P.....A.I.
   Type RSC.....M.I.
   Type SSR.....K.N.C.
   Vibrocurb..... ThyCurb

F. RR (Roof Rail)

1. Roof rail bases shall consist of continuous structural support rails that combine equipment support and vibration isolation into one unitized assembly. The rails shall incorporate springs that are free standing, laterally stable with a diameter of not less than 0.8 times the compressed height, and have additional travel-to-solid that is at least 50% of the rated deflection. Spring elements shall include travel limit stops that are capable of serving as blocking during erection of the equipment. A minimum clearance of 1/4" shall be maintained around restraining bolts as they pass through the limit stop brackets. Springs and limits stops shall be adjusted to limit movement of the equipment under wind load to 1/4". The entire roof rail assembly shall be an integral part of the roof's membrane waterproofing and shall be dry galvanized or plastic-coated.
2. Type RR roof rail bases shall be one of the following products or acceptable equal:

Type R .....A.I.

2.03 RESILIENT PENETRATION SLEEVE/SEAL

A. Resilient penetration sleeve/seals shall be field-fabricated from a pipe or sheet metal section that is l/2" to 3/4" larger than the penetrating element in all directions around the element, and shall be used to provide a sleeve through the construction penetrated. The sleeve shall extend 1" beyond the penetrated construction on each side. The space between the sleeve and the penetrating element shall be packed with glass fiber or mineral wool to within 1/4" of the ends of the sleeve. The remaining 1/4" space on each end shall be filled with acoustical sealant to form an airtight seal. The penetrating element shall be able to pass through the sleeve without contacting the sleeve. Alternatively, prefabricated sleeves accomplishing the same result are acceptable.

2.04 RESILIENT LATERAL SUPPORTS

A. These units shall either be a standard product of the vibration isolation mounting manufacturer, or be custom fabricated from standard components. These units shall incorporate neoprene isolation elements similar to Type FN that are specifically designed to provide resilient lateral bracing of ducts or pipes.

B. Resilient lateral supports shall be one of the following products or acceptable equal:

Type Custom..... A.B.
Type RPTG .....A.I.
Type ADA..... M.I.
Type RGN .....K.N.C.
Type MDPA.....V.M.&C.

2.05 THRUST RESTRAINTS

A. Thrust restraints shall consist of a spring element in series with a neoprene pad. The unit shall be designed to have the same deflection due to thrust-generated loads as specified for the isolators supporting the equipment. The spring element shall be contained within a steel frame and be designed so it can be pre-compressed at the factory to allow for a maximum of 1/4" movement during starting or stopping of the equipment. Allowable movement shall be field-adjustable. The assembly shall be furnished complete with rods and angle brackets for attachment to both the equipment and the adjacent fixed structural anchor. The thrust restraints shall be installed on the discharge of the fan so that the restraint rods are in tension. Assemblies that place the rods in compression are not acceptable. The holes in the spring restraint brackets through which the restraint rods pass must be oversized to prevent contact between the brackets and rods.

B. Thrust restraints shall be one of the following products or an acceptable equal:

Type TRK..... A.B.
Type TR .....A.I.

Type WB ..... M.I.
Type HSR.....K.N.C.

2.06 GROMMETS

A. Grommets shall be specially formed to prevent bolts from directly contacting the isolator base plate, and shall be sized so that they will be loaded within the manufacturer's recommended load range.

B. Grommets shall either be custom made by combining a neoprene washer and sleeve, or be one of the following products or an acceptable equal:

Type Isogrommets .....MBIS, Inc. (Bedford Heights, OH)
Type WB.....Barry Controls (Brighton, MA)
Type HG ..... Mason Industries, Inc. (Hauppauge, NY)

2.07 ACOUSTICAL SEALANT

A. Sealants for acoustical purposes as described in this specification shall be silicone or one of the non-setting sealants indicated below:

Acoustical sealant.....D.A.P.
BR-96 .....Pecora
Acoustical sealant..... Tremco
Acoustical sealant..... U.S.G.

PART 3 - EXECUTION

3.01 APPLICATION

A. General

1. Refer to the PRODUCTS section of this specification for vibration isolation devices identified on the drawings or specified herein.
2. The static deflection of all isolators specified herein are the minimum acceptable deflections for the mounts under actual load. Isolators selected solely on the basis of rated deflection are not acceptable and will be disapproved.

B. Major Equipment

1. Unless otherwise shown or specified, all floor-mounted major equipment shall be set on 4" high concrete housekeeping pads.
2. Types and minimum static deflections of vibration isolation devices for major equipment items shall be as scheduled on the drawings or specified hereunder.
3. Thrust restraints shall be installed on all suspended fans and on all floor-mounted fans developing 4" or more of static pressure, unless the horizontal component of the thrust force can be demonstrated to be less than 10% of the equipment weight.

C. Miscellaneous Mechanical Equipment: Miscellaneous pieces of mechanical equipment such as expansion tanks which are connected to isolated piping systems shall be vibration-isolated from the building structure by Type NP or Type HN isolators (selected for 0.1" static deflection) unless their position in the piping system requires a higher degree of isolation as called for under Pipe Isolation.

D. Pipes

1. All hot water, drain and engine exhaust piping that is connected to vibration-isolated equipment shall be isolated from the building structure within the following limits:
   a. Within 100' total pipe length of connected vibration-isolated equipment (chillers, pumps, air handling units, etc.)
2. Piping shall be isolated from the building structure by means of vibration isolators, resilient lateral supports, and resilient penetration sleeve/seals.
3. Isolators for the first three support points adjacent to connected equipment shall achieve one half the specified static deflection of the isolators supporting the connected equipment. When the required static deflection of these isolators is greater than 1/2", Type FSN or HSN isolators shall be used. When the required static deflection is less than or equal to 1/2", Type FN or HN isolators shall be used. All other pipe support isolators within the specified limits shall be either Type FN or HN achieving at least 1/4" static deflection.
4. Where lateral support of pipes is required within the specified limits, this shall be accomplished by use of resilient lateral supports.
5. Pipes within the specified limits that penetrate the building construction shall be isolated from the building structure by use of resilient penetration sleeve/seals.
6. Provide flexible pipe connections as called for under Major Equipment above and wherever shown on the drawings.

E. Ductwork

1. All sheet metal ducts and air plenums that are within mechanical rooms or within a distance of 50' total duct length of connected vibration-isolated equipment (whichever is longer) shall be isolated from the building structure by Type FN, PCF or HN isolators. All isolators shall achieve 0.1" minimum static deflection.
2. Ducts within the specified limits that penetrate the building construction shall be isolated from the building structure by use of resilient penetration sleeve/seals.

3.02 INSTALLATION OF VIBRATION ISOLATION EQUIPMENT

A. General

1. Locations of all vibration isolation devices shall be selected for ease of inspection and adjustment as well as for proper operation.
2. Installation of vibration isolation equipment shall be in accordance with

the manufacturer's instructions.

B. Isolators

1. All vibration isolators shall be aligned squarely above or below mounting points of the supported equipment.
2. Isolators for equipment with bases shall be located on the sides of the bases which are parallel to the equipment shaft unless this is not possible because of physical constraints.
3. Locate isolators to provide stable support for equipment, without excess rocking. Consideration shall be given to the location of the center of gravity of the system and the location and spacing of the isolators. If necessary, a base with suitable footprint shall be provided to maintain stability of supported equipment, whether or not such a base is specifically called for herein.
4. If a housekeeping pad is provided, the isolators shall bear on the housekeeping pad and the isolator base plates shall rest entirely on the pad.
5. Hanger rods for vibration-isolated support shall be connected to structural beams or joists, not floor slab between beams and joists. Provide suitable intermediate support members as necessary.
6. Vibration isolation hanger elements shall be positioned as high as possible in the hanger rod assembly, but not in contact with the building structure, and so that the hanger housing may rotate a full 360° about the rod axis without contacting any object.
7. Parallel running pipes may be hung together on a trapeze that is isolated from the building. Isolator deflections must be the greatest required by the provisions for pipe isolation for any single pipe on the trapeze. Do not mix isolated and unisolated pipes on the same trapeze.
8. Pipes, ducts and equipment shall not be supported from other pipes, ducts and equipment.
9. Resiliently isolated pipes, ducts and equipment shall not come in rigid contact with the building construction or rigidly supported equipment.
10. The installed and operating heights of equipment vibration-isolated with Type FSNTL or Type RI isolators or with Type RC-2 or Type RR isolation bases shall be identical. Limit stops shall be out of contact during normal operation. Adjust isolators to provide 1/4" clearance between the limit stop brackets and the isolator top plate, and between the travel limit nuts and travel limit brackets.
11. Adjust all leveling bolts and hanger rod bolts so that the isolated equipment is level and in proper alignment with connecting ducts or pipes.
12. Type RI isolators shall be installed in strict accordance with the manufacturer’s instructions.

C. Bases

1. No equipment unit shall bear directly on vibration isolators unless its own frame is suitably rigid to span between isolators and such direct support is acceptable to the equipment manufacturer. This provision shall apply whether or not a base frame is called for on the schedule. In the case

that a base frame is required for the unit because of the equipment manufacturer's requirements and is not specifically called for on the equipment schedule, a base frame recommended by the equipment manufacturer shall be provided at no additional expense.

2. Unless otherwise indicated, there is to be a minimum operating clearance of 1" between steel rails, steel frame bases or inertia bases and the floor beneath the equipment. The isolator mounting brackets shall be positioned and the isolators adjusted so that the required clearance is maintained. The clearance space shall be checked by the Contractor to ensure that no construction debris has been left to short circuit or restrict the proper operation of the vibration isolation system.
3. Type RC-2 and Type RR isolation bases shall be installed in strict accordance with the manufacturer’s instructions.

D. Thrust Restraints: Thrust restraints shall be attached on each side of the fan at the vertical centerline of thrust. The two rods of the thrust restraint shall be parallel to the thrust force. This may require custom brackets or standoffs. The body of the thrust restraint shall not come in contact with the connected elements. Thrust restraints shall be adjusted to constrain equipment movement to the specified limit.

E. Grommets: Where grommets are required at hold down bolts of isolators, bolt holes shall be properly sized to allow for grommets. The hold down bolt assembly shall include washers to distribute load evenly over the grommets. Bolts and washers shall be galvanized.

F. Resilient Penetration Sleeve/Seals: Maintain an airtight seal around the penetrating element and prevent rigid contact between the penetrating element and the building structure. Fit the sleeve tightly to the building construction and seal airtight on both sides of the construction penetrated with acoustical sealant.

END OF SECTION 230550

MP:xx

SECTION 230553

PIPE AND VALVE IDENTIFICATION

PART 1 - GENERAL

1.01 SUBMITTALS

A. Product Data: Catalog sheets, specifications and installation instructions for each item specified.

1.02 REFERENCES

ANSI A13.1 - Scheme for Identification of Piping Systems

PART 2 - PRODUCTS

2.01 ACCEPTABLE MANUFACTURERS

W.H. Brady Co., Milwaukee, WI.
Emed Co., Buffalo, NY.
Panduit Corp., Tinley Park, IL.
Seton Nameplate Corp., New Haven, CT.
Bunting Inc., Pittsburgh, PA.

2.02 PIPE MARKERS AND ACCESSORIES

A. Snap-on Marker: One piece wrap around type constructed of precoiled acrylic plastic with clear polyester coating, integral flow arrows, legend printed in alternating directions, 3/4 inch adhesive strip on inside edge, and 360 degree visibility.

B. Strap-On Marker: Strip type constructed of precoiled acrylic plastic with clear polyester coating, integral flow arrows, legend printed in alternating directions, factory applied grommets, and pair of stainless steel spring fasteners.

C. Stick-On Marker: Pressure sensitive adhesive backed type constructed of vinyl with clear polyester coating, and integral flow arrows for applications where flow arrow banding tape is not being used.

D. Pipe Marker Legend and Color Field Sizes:

OD of Pipe or Insulation (Inches)	Letter Size (Inches)	Length of Color Field (Inches)
3/4 to 1-1/4 incl.	1/2	8
1-1/2 to 2 incl.	3/4	8

2-1/2 to 6 incl.	1-1/4	12
8 to 10 incl.	2-1/2	24
Over 10	3-1/2	32

E. Banding Tapes: Pressure sensitive adhesive backed type constructed of vinyl with clear polyester coating.

1. Plain Tape: Unprinted type; color to match pipe marker background.
2. Flow Arrow Tape: Printed type with integral flow arrows; color to match pipe marker background.

F. Pipe Size Labels: Pressure sensitive adhesive backed type constructed of vinyl with clear polyester coating, vertical reading pipe size in inches, and legend size matching adjacent pipe marker.

2.03 PIPE SERVICE IDENTIFICATION TAGS

A. Type: No. 19 B & S gage brass, with 1/4 inch high pipe service abbreviated legend on one line, over 1/2 inch high pipe size legend in inches, both deep stamped and black filled; and 3/16 inch top hole for fastener.

B. Size: 2 inch square tag.

C. Fasteners: Brass "S" hook or brass jack chain of size as required for pipe to which tag is attached.

2.04 VALVE SERVICE IDENTIFICATION TAGS

A. Type: No. 19 B & S gage brass, with 1/4 inch high valve service abbreviated lettering on one line over 1/2 inch high valve service chart number, both deep stamped and black filled; and with 3/16 inch top hole for fastener.

B. Sizes: HVAC Use: 1-1/2 inch dia round.

C. Fasteners: Brass “S” hook or brass jack chain of size as required for valve stem or handle to which tag is attached.

2.05 VALVE SERVICE IDENTIFICATION CHART FRAMES

A. Type: Satin finished extruded aluminum frame with rigid clear plastic glazing, size to fit 8-1/2 x 11 inches valve chart.

PART 3 - EXECUTION

3.01 PREPARATION

A. Complete testing, insulation and finish painting Work prior to completing the Work of this Section.

B. Clean pipe surfaces with cleaning solvents prior to installing piping identification.

3.02 INSTALLATION

A. Install the Work of this Section in accordance with the manufacturers printed installation instructions, unless otherwise specified.

B. Stick-On Pipe Markers:

1. Install minimum of 2 markers at each specified location, 90 degrees apart on visible side of pipe.
2. Encircle ends of pipe markers around pipe or insulation with banding tape with one inch lap. Use plain banding tape on markers with integral flow arrows, and flow arrow banding tape on markers without integral flow arrows.

C. Pipe Size Labels: Install labels adjacent to each pipe marker and upstream from flow arrow. Install a minimum of 2 pipe size labels at each specified locations, 90 degrees apart on visible side of pipe.

D. Pipe Service Identifications Tags: Attach tags to piping being identified with “S” hooks or jack chains.

3.03 PIPING IDENTIFICATION SCHEDULE

A. Piping Identification Types:

1. Piping or Insulation under 3/4 inch od: Pipe identification tags.
2. Piping or Insulation 3/4 inch to 5-7/8 inch od: Snap-on marker or stick-on marker.
3. Piping or Insulation 6 inch od and Larger: Strap-on marker or stick-on marker.

B. Identify all piping systems, installed within and exterior of the building, piping exposed to view, above all ceilings, bare and insulated, as to content, size of pipe and direction of flow, with the following exceptions:

1. Piping in furred wall spaces, except in valve access panels where valves and piping shall be identified as specified for exposed piping systems.
2. Piping exposed in finished spaces such as offices, classrooms, wards, toilet rooms, shower rooms and spaces as specified.

C. Locate piping identification (with in 24”) at valve locations; at points where piping enters and leaves a partition, wall, floor or ceiling, and at intervals of 20 feet on straight runs. Where two or more pipes run in a parallel, place the printed legend and other markers in the same relative location.

3.04 VALVE IDENTIFICATION SCHEDULE

A. Valve Service Identification Tags:

1. Tag service, balance, isolation and control valves installed under this project, with a brass tag fastened to the valve handle or stem, marked to indicate service and numbered in sequence for the following applications:
   a. Valves in heating, ventilating, air conditioning and refrigeration systems.

B. Valve Service Identification Charts:

1. Provide 2 framed valve charts for each piping system specified to be provided with valve identification tags. Type charts on 8-1/2 x 11 inches heavy white bond paper, indicating valve number, service and location.
2. Hang framed charts at locations as directed.

END OF SECTION 230553

MP:xx

SECTION 230554

DUCT AND EQUIPMENT IDENTIFICATION

PART 1 - GENERAL

1.01 SUBMITTALS

A. Product Data: Catalog sheets, specifications and installation instructions for each item specified

1.02 DELIVERY, STORAGE AND HANDLING

A. Deliver paint to the Site in original, new unopened containers, bearing manufacturers' printed labels.

B. Store materials at the site where directed. Keep storage space clean and accessible to the Engineer at all times.

PART 2 - PRODUCTS

2.01 MATERIALS

A. Paint: Semi-gloss enamel (latex base) complying with the requirements of FS TT-P-001511.

PART 3 - EXECUTION

3.01 PREPARATION

A. Do not execute the Work of this Section until all testing, insulation and finish painting Work have been completed.

B. Place drop cloths or other suitable protection as required to avoid damage and paint spatters on adjacent surfaces.

3.02 DUCT IDENTIFICATION

A. Identify exposed ductwork, bare or insulated, directly connected to air handling apparatus, in the following spaces or rooms, by means of painted stenciled legends:

1. Mechanical Equipment Room

B. Locate stenciled legends to be readily visible from any point of observation. Stencil identification along center line of duct, close to equipment. Where view is unobstructed from two directions, apply two sets of stenciling (both sides), visible from each direction.

C. Letter Size: 1-1/2 inches in height.

D. Samples of Ductwork Identification:

1. Outside Air (OA)
2. Supply Air (SA)
3. Return Air (RA)
4. Exhaust Air (EA)

E. Colors: Paint stenciled letters black. Where the background color is dark, paint background white before stenciling.

3.03 EQUIPMENT IDENTIFICATION

A. Identify mechanical equipment, bare or insulated, installed in the following spaces or rooms, by means of painted stenciled legends:

1. Mechanical Equipment Room
2. Steam Service
3. Roof – Provide engraved aluminum nameplate
4. At Grade – Provide engraved aluminum nameplate

B. Paint stenciled legends black, a minimum of 1-1/2 inches (6 inches in Mechanical Equipment Rooms) in height, located to be readily visible from a reasonable point of view. Place identification along center line of equipment, if possible.

C. Engraved Plastic-Laminate Signs (Interior use where paint stencil is not appropriate.):

1. ASTM D 709, Type I, cellulose, paper-base, phenolic-resin-laminate engraving stock; Grade ES-2, black surface, black phenolic core, with white (letter color) melamine subcore, except when other colors are indicated. Fabricate in sizes required for message. Provide holes for mechanical fastening.
2. Engraved with engraver's standard letter style, of sizes and with terms to match equipment identification.
3. Thickness: 1/16 inch, for units up to 20 square inches or 8 inches length; 1/8 inch for larger units
4. Fasteners: Self-tapping stainless steel screws or aluminum pop rivet

D. Engraved Aluminum Nameplate:

1. Black surface, with white (letter color). Fabricate in sizes required for message. Provide two side holes for mechanical fastening.
2. Engraved with engraver's standard letter style, of sizes and with terms to match equipment identification.
3. Thickness: 0.020 inch.
4. Fasteners: Self-tapping stainless steel screws or aluminum pop rivet

E. Samples of Equipment Identification:

1. Air Conditioning Unit AC-1
2. Supply Fan S-1
3. Exhaust Fan E-1
4. Return Fan R-1

3.04 ACCESS DOOR IDENTIFICATION

A. Access doors adjacent to fire damper, smoke damper or smoke detector shall be identified with letters no less than 1/2" high in accordance with NYS IMC.

3.05 APPLICATION OF PAINT

A. Stencil Painting: Apply with a brush or aerosol type spray can.

3.06 CLEANING

A. Clean adjacent surfaces of paint spatters resulting from the Work of this Section.

END OF SECTION 230554

MP:xx

SECTION 230593

CLEANING AND TESTING

PART 1 GENERAL

1.01 SUBMITTALS

A. Quality Control Submittals

1. Test Reports (Field Tests):
   a. Refrigeration Systems: Submit results of Refrigeration Systems Pressure - Dehydration Tests.
   b. Hot Water Heating Boilers: Submit results on Boiler Test.

B. Duct System Cleanliness Tests:

1. Visually inspect duct system to ensure that no visible contaminants are present.

2. Test sections of metal duct system, chosen randomly by Owner, for cleanliness according to "Vacuum Test" in NADCA ACR, "Assessment, Cleaning and Restoration of HVAC Systems."
   a. Acceptable Cleanliness Level: Net weight of debris collected on the filter media shall not exceed 0.75 mg/100 sq. cm.

1.02 QUALITY ASSURANCE

A. Regulatory Requirements:

1. Perform factory testing of factory fabricated equipment in complete accordance with the agencies having jurisdiction.
2. Perform field testing of piping systems in complete accordance with the local utilities and other agencies having jurisdiction and as specified.

1.03 PROJECT CONDITIONS

A. Protection: During test Work, protect controls, gages and accessories which are not designed to withstand test pressures. Do not utilize permanently installed gages for field testing of systems.

1.04 SEQUENCING AND SCHEDULING

A. Transmit written notification of proposed date and time of operational tests to the Owner at least 5 days in advance of such tests.

B. Perform cleaning and testing Work in the presence of the Owner.

C. Pressure test piping systems inside buildings, at the roughing-in stage of installation, before piping is enclosed by construction Work, and at other times as directed. Perform test operations in sections as required and directed, to

progress the Work in a satisfactory manner and not delay the general construction of the building. Valve or cap-off sections of piping to be tested, utilizing valves required to be installed in the permanent piping systems, or temporary valves or caps as required to perform the Work.

D. Duct Systems: Clean new and existing duct system(s) before testing, adjusting, and balancing.

PART 2 PRODUCTS

2.01 MATERIALS

A. Test Equipment and Instruments: Type and kind as required for the particular system under test.

B. Test Media (air, gas, refrigerant, vacuum, water): As specified for the particular piping or system under test.

C. Cleaning Agent (chemical solution, steam, water): As specified for the particular piping, apparatus or system being cleaned.

PART 3 EXECUTION

3.01 PRELIMINARY WORK

A. Thoroughly clean pipe and tubing prior to installation. During installation, prevent foreign matter from entering systems. Prevent if possible and remove stoppages or obstructions from piping and systems.

B. Connections or extension of existing piped systems: Prior to connecting to any existing system(s), the Mechanical Contractor shall take sample of fluid and provide test reports of the existing fluids chemical, residuals and or glycol concentration to the Engineer for acceptance. If the test results have not been provided prior to connection, the Mechanical Contractor shall be held responsible in bringing the entire hydronic system within acceptable specifications. The Mechanical Contractor shall top off the new or existing glycol feed tank, at project closeout.

C. Thoroughly clean compressed air, control air, refrigerant pipe and similar systems prior to pressure or vacuum testing.

3.02 PRESSURE TESTS - PIPING

A. Piping shall be tight under test and shall not show loss in pressure or visible leaks, during test operations or after the minimum duration of time as specified. Remove piping which is not tight under test; remake joints and repeat test until no leaks occur.

B. Water Systems:

1. Circulating water systems, including propylene glycol solution systems and cold water make-up piping connections to heating, ventilating, air conditioning and refrigeration systems, unless otherwise specified:
   a. Before final connections are made perform hydrostatic test at 1-1/2 times the maximum working pressure, but not less than 125 psig, for 4 hours.
   b. After final connections are made perform hydrostatic retest at a pressure equal to maximum operating system design pressure, but not less than 30 psig, for 4 hours.

C. Gas Piping: Before backfilling or concealment perform air test of duration and pressure as required by the local gas company. However, for gas piping designed for pressures of from 4 inches to 6 inches water column, air test at 15 inches Hg for one hour, without drop in pressure. Test gas piping with air only. Check joints for leaks with soap suds.

3.03 TESTING OF EQUIPMENT, APPARATUS AND APPURTENANCES

A. Hot Water Boilers: If boiler is field erected, perform hydrostatic test at 30 psig, after installation, with piping connections shut-off.

3.04 HEATING, VENTILATING AND AIR CONDITIONING SYSTEMS - CLEANING AND OPERATIONAL TESTING

A. Circulating Water Systems:

1. Cleaning: Flush systems and apparatus, upon completion of pressure and miscellaneous tests. Completely open valves and flush each system with clean water, prior to chemical cleaning. Repeatedly flush at short intervals until twice the system water capacity has been flushed through. Chemically clean systems immediately following flushing operations. Circulate a solution consisting of Citri-Clean in dilution rates as indicated by manufacturer. Completely fill system with cleaning solution; vent system and place in operation, with automatic controls operating and valves fully open. Allow system to reach design operating temperature or an operating temperature designated by the Owner's Representative. Circulate the solution through the system for a minimum of 4 consecutive hours; immediately drain system and flush with clean water until the pH at the farthest drain matches the clean water input. Keep strainers unplugged during cleaning operations. Remove and clean strainer screens prior to operational test. Refill system with clean water.
2. Operational Test: Run system in an automatic mode for a minimum of 120 consecutive hours. During this time, make final adjustments, including the setting of the balancing valves.

3.05 DUCT SYSTEM AND EQUIPMENT CLEANING

A. Duct Systems:

1. Use service openings for entry and inspection.
   a. Create new openings and install access panels appropriate for duct static-pressure class if required for cleaning access. Provide insulated panels for insulated or lined duct. Patch insulation and liner as recommended by duct liner manufacturer. Comply with Division 23 Section "Ductwork Accessories" for access panels and doors.
   b. Disconnect and reconnect flexible ducts as needed for cleaning and inspection.
   c. Remove and reinstall ceiling to gain access during the cleaning process.

2. Particulate Collection and Odor Control:

   a. When venting vacuuming system inside the building, use HEPA filtration with 99.97 percent collection efficiency for O.3-micron-size (or larger) particles.
   b. When venting vacuuming system to outdoors, use filter to collect debris removed from HVAC system, and locate exhaust downwind and away from air intakes and other points of entry into building.

B. Clean the following components by removing surface contaminants and deposits:

1. Air outlets and inlets (registers, grilles, and diffusers).
2. Supply, return, and exhaust fans including fan housings, plenums (except ceiling supply and return plenums), scrolls, blades or vanes, shafts, baffles, dampers, and drive assemblies.
3. Air-handling unit internal surfaces and components including mixing box, coil section, air wash systems, spray eliminators, condensate drain pans, humidifiers and dehumidifiers, filters and filter sections, and condensate collectors and drains.
4. Coils and related components.
5. Return-air ducts, dampers, actuators, and turning vanes except in ceiling plenums and mechanical equipment rooms.
6. Supply-air ducts, dampers, actuators, and turning vanes.
7. Dedicated exhaust and ventilation components and makeup air systems.

C. Mechanical Cleaning Methodology:

1. Clean metal duct systems using mechanical cleaning methods that extract contaminants from within duct systems and remove contaminants from building.
2. Use vacuum-collection devices that are operated continuously during cleaning. Connect vacuum device to downstream end of duct sections so areas being cleaned are under negative pressure.
3. Use mechanical agitation to dislodge debris adhered to interior duct surfaces without damaging integrity of metal ducts, duct liner, or duct accessories.
4. Clean fibrous-glass duct liner with HEPA vacuuming equipment; do not permit duct liner to get wet. Replace fibrous-glass duct liner that is

damaged, deteriorated, or delaminated or that has friable material, mold, or fungus growth.

5. Antimicrobial Agents and Coatings: Apply EPA-registered antimicrobial agents if fungus is present. Apply antimicrobial agents according to manufacturer's written instructions after removal of surface deposits and debris.

3.06 REFRIGERATION SYSTEMS - TESTING, DEHYDRATION AND CHARGING

A. Leak Test Procedure:
   1. Refrigerant Piping Systems:
      a. Pressurize with dry nitrogen to 50 psig and test for leaks using a bubble type solution.
      b. Release this partial test pressure and correct deficiencies.
      c. Charge system with a trace of refrigerant to 15 psig, then add dry nitrogen until system test pressures are reached and retest for leaks with an electronic leak detector.
      d. Release pressure, repair leaks and retest as necessary until no leaks occur.
      e. Recover refrigerant used for leak testing.
   2. System Test Pressures:
      a. Charge system with dry nitrogen and trace of refrigerant (HFC 134A, HFC 245, HFC 404, HFC 407C, HFC 410A or HFC 507) to 350 psig and retest for leaks with an electronic leak detector. The system must stay at 350 psig pressure for 24 hours to pass the system test pressure test.
      b. Release pressure, repair leaks and retest as necessary until no leaks occur.
      c. Recover refrigerant used for leak testing.

B. Dehydration:
   1. Low and Ultra Low Temperature Refrigeration Systems (-30 degrees F to 32 degrees F:
      a. Following pressure tests, dehydrate each system with a vacuum pump.
      b. Draw and hold an initial vacuum of 800 microns. Break this vacuum by pressurizing with dry nitrogen to 10 psig, and change oil in vacuum pump.
      c. Draw and hold a second vacuum of 500 microns. Break this vacuum by pressurizing with dry nitrogen to 10 psig, and change oil in vacuum pump.
      d. Draw and hold a third vacuum of 250 microns for 8 to 12 hours with an allowable maximum rise of 50 microns. Break this third vacuum by adding liquid refrigerant specified for the equipment to the high side of the system (liquid line).
      e. Verify vacuum obtained with an electronic vacuum gage.
   2. Medium Temperature Refrigeration Systems (33 degrees F to 55degrees F), and Air Conditioning Systems:
      a. Following pressure tests, dehydrate each system with a vacuum pump.

b. Draw and hold an initial vacuum of 500 microns. Break this vacuum by pressurizing with dry nitrogen to 10 psig, and change oil in vacuum pump.
c. Draw and hold a second vacuum of 500 microns. Break this vacuum by pressurizing with dry nitrogen to 10 psig, and change oil in vacuum pump.
d. Verify vacuum obtained with an electronic vacuum gage.

C. Refrigerant Charging: Follow equipment manufacturer's printed charging directions unless otherwise specified.
1. Introduce refrigerant of type and quantity required through a filter/drier installed in the temporary charging line.
a. Purge small amount of liquid out of the system side of the charging hose.
b. Prevent moisture and other contaminants from entering the system.
2. Charge liquid refrigerant through a charging valve provided in the high pressure side of the system.
a. Small amounts of gaseous refrigerant may be charged through the compressor suction service valve port.
3. No bubbles shall appear at the moisture-liquid indicator when the system is fully charged and operational. Do not overcharge.
4. Record the weight in pounds of refrigerant charged into each system and submit this record to the Owner.

D. Compressor Oil Charge: Pump oil into the compressor after the last vacuum has been preformed. Follow all Manufactures Recommended for oil type and amount to be installed.

E. Adjustments and Operational Testing:
1. Adjustments: Place the system in operation with automatic controls functioning. Adjust controls and apparatus for proper operation. Test thermometers and gages for accuracy over the entire range. Remove and replace items found defective.
a. Check belts, fan blades, fittings, TXV bulbs, and electrical connections for tightness before start up.
b. Check TXV bulb for proper location should be between 8 and 10 o'clock or 2 & 4 o'clock.
c. Seal off all holes in the condition space as specified.
d. Provide a point to point control check of the system to ensure that the specified inputs and outputs are receiving the signal from the proper sensors or controlling the proper device.
e. Set pressure controls and safety controls.
f. Close or de-energize all solenoids, and start up the system.
g. Check that all controls and safety switches are operating properly.
h. Adjust TXV for proper super heat back to the compressors.
i. Clean TXV strainers as many times as required.
j. After one week of run time, change the liquid cores if they are the replaceable type.

k. After one month of run time, replace the liquid cores and compressor suction socks. Replace the liquid cores as required. Clean the TXV's as required.

2. Operational Test:
   a. Place system in operation, with final connections to equipment and with automatic controls operating, and operate for a minimum of 120 consecutive hours.
   b. Operational test shall prove to the satisfaction of the Owner that the system can produce the cooling effect required by the drawings and the specifications.

3.07 INSTALLATION

A. Connections or extension of existing glycol piping systems: Prior to connecting to the existing system(s), the Mechanical Contractor shall take sample of fluid and provide test reports of the existing fluids concentration of glycol and residuals to the Engineer for acceptance. If the test results have not been provided prior to connection, the Mechanical Contractor shall be held responsible in bringing the entire hydronic system within acceptable specifications. The Mechanical Contractor shall top off the new or existing glycol feed tank, at project closeout.

END OF SECTION 230593

MP:xx

SECTION 230594

BALANCING OF SYSTEMS

PART 1 GENERAL

1.01 SUBMITTALS

A. Quality Control Submittals:

1. Testing, Adjustment and Balancing Reports: Submit final testing and balancing results on applicable report forms, as approved or furnished by the environmental systems balancing council or bureau, which is certifying the independent member agency performing the Work, required by this Section. Each final systems report form shall bear the signature of the person performing the Work and recording the data and the signature of the certified supervisor for the performing agency. Submit simultaneously with the final reports, a list of the instruments used with the last date of calibration for each instrument.

1.02 QUALITY ASSURANCE

A. Qualifications:

1. Provide the services of a certified independent agency for the testing, adjustment and balancing of all air distribution and hydronic distribution systems complete with all connected apparatus and equipment. The agency shall be certified by the Associated Air Balance Council Bureau - AABC, Washington, DC 20005, National Environmental Balancing Bureau - NEBB, Arlington, Va. 22209 or by pre-approval of the engineer.
2. The Work shall be performed by skilled mechanical technicians under the direct supervision of certified personnel in the employ of the independent agency. The supervisor shall be personally certified by the national council or bureau, as approved by the Engineer.

1.03 SEQUENCING AND SCHEDULING

A. Scheduling:

1. Perform environmental systems testing and balancing after cleaning, miscellaneous testing, adjustment and operational testing Work has been completed.
2. Test and balance system during a period of time when outside temperature conditions will impose a significant load on the system; i.e., summer months for air conditioning system, winter months for heating system. Balance and adjust systems accordingly. Return to the site as required.
3. Send written notification to the Owner's Representative a minimum of five days prior to the performance of testing and balancing Work. Perform testing and balancing Work in the presence of the Owner's Representative.

1.04 ACCURACY

A. Outlets and equipment shall be balanced to within 5% of design airflows. Portions of systems unable to be balanced to these criteria shall be brought to the attention of the Engineer.

PART 2 PRODUCTS

2.01 TEST EQUIPMENT

A. General Information: Test instruments are included in this specification for information only. Balancing of air and hydronic systems shall be performed by qualified personnel utilizing company owned test instruments, which will remain the property of the company. Use test instruments which are in first class operating condition, with individual calibration histories to guarantee their accuracy. Test instruments shall be of type and kind as required by the type of system installed. Trade names and manufacturer's names are mentioned in this section for descriptive purposes only; instruments of equivalent range and capabilities may be utilized.

B. Air Balancing Instruments:

1. Manometers: Inclined with ranges of 0 to 1/4" and 0 to 1"; Combination inclined and vertical with a range of 0 to 5" and U tube type, 18".
2. Portable "Magnehelic" Draft Gages: Ranges 0 to 1/2", 0 to 1" and 0 to 5".
3. Anemometers: Deflecting vane type with a range of 100 to 3000 fpm, similar to Alnor Velometer Model 6000 BP and 4" diameter rotating vane type.
4. Pitot Tubes: ASHRAE standard type, stainless steel, 5/16" diameter, lengths as required.
5. Sling Psychrometer.
6. Smoke Candles and Smoke Generator.
7. Flowhoods with hoods to match air outlet sizes used on project.

C. Hydronic Balancing Instruments:

1. Calibrated Test Gages: Ranges 0 to 30 lbs., 0 to 60 lbs., 0 to 200 lbs.
2. Calibrated Test Gages (Compound Type): Ranges from -30" to 30 lbs. and -30" to 60 lbs.
3. U Tube Manometer: 36".

D. Air and Hydronic Systems Balancing Instruments:

1. Thermometers: 12" mercury column type and dial type, with a range of -40 to +120 degrees F. and 0 to 220 degrees F. Total of four thermometers.
2. Universal Hand Tachometer: Herman H. Sticht Type UH.
3. Stop Watch.
4. Stroboscope.

5. Contact Pyrometer: Thermocouple type.
6. Volt-Ohm-Ammeter Test Kit, High Current Type: Sperry "Ohmprobe".
7. Volt-Ammeter: With leads for connecting to lugs.

PART 3 EXECUTION

3.01 FIELD QUALITY CONTROL

A. Inspection: Prior to the environmental testing and balancing of hydronic and air distribution systems, the certified supervisor in the employ of the testing and balancing agency shall inspect the installations and notify the Owner's Representative of any Work which must be performed or modified prior to initiating testing and balancing procedures.

B. Performance: Test and balance environmental hydronic and air distribution systems, including all connected equipment and apparatus, so as to conform to the design conditions. Perform the Work of this section in accordance with the published standards of the balancing council or bureau, which is certifying the member firm. Record all test readings, calculations and results.

END OF SECTION 230594

MP:xx

SECTION 230713

DUCT INSULATION

PART 1 GENERAL

1.01 SUBMITTALS

A. General: Submit each item in this Article according to the Conditions of the Contract and Division 1 Specification Sections.

B. Insulation Schedule: Schedule shall list all systems and indicate by system the type of insulation, jacketing, etc, to include manufacturer's model number and size for each service application.

C. Product Data for each Insulation type. Manufacturer's catalog sheets, specifications, and installation instructions for each item specified, excluding Miscellaneous Materials.

1.02 QUALITY ASSURANCE

A. Qualifications: The persons and supervisors performing the Work of this section shall be personally experienced in installing insulation and shall have been regularly performing such work for a minimum of 3 years while in the employ of a company or companies engaged in the installation of piping insulation.

B. Regulatory Requirements:

1. Fire and Smoke Hazard Ratings: Duct insulation installed inside a building, duct lining materials, Class 1 and 2 jacketing materials, mastics, and adhesives shall have a maximum flame spread rating of 25 and a maximum fuel contributed and smoke developed rating of 50 or less, when tested in accordance with ASTM E84 and UL723.

PART 2 PRODUCTS

2.01 INSULATION MATERIALS

A. Insulation for ductwork shall be fibrous glass with a factory applied laminated foil - scrim - kraft jacket of Class as specified and as follows:

1. (Type-1) Fiberglass Board insulation with a factory applied Class 1 jacket. Preformed, flat, rectangular rigid material, R-Value as specified, having a density of 3.0 pcf, a thermal conductivity (k value at 75 degrees F.) of 0.23 conforming to ASTM C612, with a factory applied Class 1 jacket.

2. (Type-2) Fiberglass Flexible Board insulation with a factory applied Class 1 jacket. Preformed, flat, rectangular rigid material, R-Value as specified, having a density of 3.0 pcf, a thermal conductivity (k value at 75 degrees

F.) of 0.23 conforming to ASTM C612, with a factory applied Class 1 jacket.

3. (Type-3) Fiberglass Blanket insulation with a factory applied Class 2 jacket. Roll type, flexible material, R-Value as specified, having a density of 1.0 pcf, a thermal conductivity (k value at 75 degrees F.) of 0.27, conforming to ASTM C553 with a factory applied Class 2 jacket.

4. (Type-4) Flexible Sheet Foam Plastic insulation. Chemically expanded unicellular elastomeric material possessing the following physical characteristics: R-Value as specified. Flexible sheet form having a density of 6 pcf; a thermal conductivity (k value at 75 degrees F.) of 0.28 max.; operating temperature range of -20 to 200 degrees F., and a self-extinguishing fire resistance rating in accordance with ASTM D1692. Provide UV protective for all outdoors installations and indoors where exposed to sunlight.

B. Insulation Values: Provide the specified insulating value as required, the insulation value shall be the **installed** R-Value

2.02 JACKET MATERIALS

A. When conditions permit, factory applied jacketing materials to insulation.

B. Laminated Jacket:

1. (Class-1) Permanent, fire resistant, non-corrosive type having a UL flame spread rating of 25 or less, a fuel contributed and smoke developed rating of 50 or less, a vapor transmission rate of 0.02 perms or less. Jacket materials shall be as follows:
   i. (Class-1) - Heavy duty 0.7 mil thick aluminum foil and white kraft paper laminate, reinforced with glass fiber scrim or fiber glass yarn, not less than 4 per inch in both directions.

C. Waterproof Membrane:

2. (Class-3) - Waterproofing, High performance prefabricated 13-ply self-adhering, sheet-type waterproofing membrane with flexible aluminum material. Jacketing shall perform –30 degF to +300 degF service temperature. Zero weather and vapor moisture permeability, high puncture / tear resistance, mold inhibiting agents. Apply materials in complete accordance with the manufacturer's printed instructions manual. Furnish color (aluminum or white) as directed by Architect. Provide VentureClad Plus 1579CW or acceptable equal.

   i. Install membrane on board type insulation when ductwork is exposed to the elements outside a building and where noted.

2.03 ADHESIVES, SEALANTS AND CEMENTS: (Cereal base adhesives will not be

accepted).

A. Vapor Seal Adhesive: B. Foster 85-20, Childers' CP-82, or Epolux Cadaprene 400.

B. Vapor Barrier Mastic: B. Foster 30-35, Childers' CP-30, or Epolux Cadalar 670.

C. Joint Sealer for use with Fibrous Glass Insulation: B. Foster 30-45, Childers' CP-30 or Epolux Cadalar 670.

D. Adhesive for Flexible Foamed Plastic: Armstrong Cork Co. 520, B. Foster 82-31, Childers' CP-80 or Epolux Cadaprene 488.

2.04 MISCELLANEOUS MATERIALS

A. Duct and Equipment Insulation Fasteners: Weld pin type complete with a speed washer, or suitable clip for supporting the insulation. Fasteners shall be Graham Weld Pins, Duro Dyne Spotter Pins or Clip Pins.

B. Sealing Tape for Sealing Joints in Duct Insulation: Same materials as the jacket, as manufactured by Arno Adhesive Tapes, Inc., Compac Corp., Fasson or Morgan Adhesive Company.

C. Metal Corner Angles: 2" x 2" x 28 gage galvanized sheet metal.

D. Prefabricated Metal Corner Angle Tape: Minimum 28 gage flexible metal bonded to vapor barrier material of the same Class as the insulation jacketing material.

E. Ductwork Insulation Filler Pieces: Preformed, flat, rectangular material, of thickness as specified, having a density of 6 pcf, conforming to ASTM C612.

PART 3 EXECUTION

3.01 PREPARATION

A. Preliminary Work: Clean and dry ductwork, prior to insulating.

3.02 INSTALLATION, GENERAL

A. Install the Work of this section in accordance with the manufacturer's printed installation instructions, except as specified otherwise

3.03 INSTALLATION

A. General: Provide insulation as scheduled below, as a minimum, insulate all HVAC systems provided in this project in compliance with 2020 Energy Conservation Construction Code of New York State. Where the insulation scheduled or noted in the construction documents exceeds the Energy Code, the greater requirement shall be provided. HVAC Systems provided but not indicated

in the schedule below, however require insulation per the Energy Code, shall be provided as part of this project.

APPLICATION	MAT'L	THICKNESS / [Min. R-VALUE]	JACKET	ADD'L JACKET
Supply Duct				
Above ceilings	Type-3	2" [R-6]	Class-1	
Above ceilings, under insulated roofs.	Type-3	2" [R-6]	Class-1	
Above insulated ceilings, under roofs	Type-1	3" [R-12]	Class-1	
Exposed in finished spaces (1)	Type-1	1-1/2" [R-6]	Class-1	
Exposed in un-finished spaces (2)	Type-1	1-1/2" [R-6]	Class-1	Class-2
Exterior of the building, Rectangular duct construction.	Type-1 or 4	3" [Min R-12] (7)	Class-1	Class-3
Exterior of the building, Round duct construction	Type-1 or 4	3" [R-12]	Class-1	Class-3
Exposed in un-conditioned spaces	Type-1	1-1/2" [R-6]	Class-1	Class-2 (3)
Non accessible, un-conditioned spaces (4)	Type-1	3" [R-12]	Class-1	
Return Duct				
Above ceilings	None			
Above ceilings, under insulated roofs.	None			
Above ceilings, return air plenums	None			
Above insulated ceilings, under roofs	Type-1	3" [R-12]	Class-1	
Exposed in finished spaces (1)	Type-1	1-1/2" [R-6]	Class-1	
Exposed in un-finished spaces (2)	Type-1	1-1/2" [R-6]	Class-1	Class-2
Exterior of the building, Rectangular duct construction.	Type-1 or 4	3" [Min R-12] (7)	Class-1	Class-3
Exterior of the building, Round duct construction	Type-1 or 4	3" [R-12]	Class-1	Class-3
Exposed in un-conditioned spaces	Type-1	1-1/2" [R-6]	Class-1	Class-2 (3)
Non accessible, un-conditioned spaces (4)	Type-3	3" [R-12]	Class-1	
OA Duct				
Above ceilings	Type-3	2" [R-6]	Class-1	
Exposed in finished spaces	Type-1	1-1/2" [R-6]	Class-1	
Exposed in un-finished spaces (2)	Type-1	1-1/2" [R-6]	Class-1	Class-2
Exposed in un-conditioned spaces (3)	Type-1	1-1/2" [R-6]	Class-1	Class-2 (4)
Non accessible, un-conditioned spaces (5)	Type-3	3" [R-6]	Class-1	
Exposed in un-conditioned OA mixed with RA	Type-1	1-1/2" [R-6]	Class-1	Class-2 (4)

OA mixed with RA Duct (8)				
Above ceilings	Type-3	2” [R-6]	Class-1	
Exposed in finished spaces	Type-1	1-1/2” [R-6]	Class-1	
Exposed in un-finished spaces (2)	Type-1	1-1/2” [R-6]	Class-1	Class-2
Exposed in un-conditioned spaces (3)	Type-1	1-1/2” [R-6]	Class-1	Class-2 (4)
Non-accessible, un-conditioned spaces (5)	Type-3	2” [R-6]	Class-1	
Exposed in un-conditioned OA mixed with RA	Type-1	1-1/2” [R-6]	Class-1	Class-2 (4)
Exhaust Air Duct				
Above ceilings (6)	Type-3	2” [R-6]	Class-1	
Exposed in finished spaces (6)	Type-1	1-1/2” [R-6]	Class-1	Class-2
Relief Air Duct				
Above ceilings (6)	Type-3	2” [R-6]	Class-1	
Exposed in finished spaces (6)	Type-1	1-1/2” [R-6]	Class-1	Class-2

Comments

1) Ductwork serving the same space in which it serves, and is exposed to view, duct insulation is not required. When ductwork is exposed to view, but does not serve the space where exposed, ductwork shall be insulated as scheduled.
2) Unfinished spaces, which are considered utility use, such as: Boiler rms, mechanical equipment, fan rms, electrical rms, store rms, janitor, basements, and service passages.
3) Un-conditioned spaces: which have no heating or cooling means, such as garages, loading docks.
4) Provide jacket to 96” AFF.
5) Non-accessible and unconditioned spaces: crawl spaces, above ceilings of spaces not conditioned
6) Ductwork between exterior of the building and damper (control or back draft).
7) Provide on flanged duct, one layer 1-1/2” board without vapor barrier between duct flanges followed by a continuous layer of 1-1/2” board with vapor barrier, with the exterior membrane wrap applied.
8) OA mixed with RA, defined as: OA non-tempered outside air (IE: heated or cooled by mechanical means) combined with RA (return air) ductwork.

B. Board Insulation:

1. Board Insulation Application:
   a. Secure insulation to ductwork, with duct insulation fasteners spaced 3" in from all corners of ducts, with intermediate fasteners on maximum 16" centers in all directions. Butt all edges of insulation and fill all voids with similar insulation.
   b. Install board type insulation with a Class 1 jacket. When ductwork cross seams, angle bracing or reinforcing are higher than the

insulation thickness, increase insulation thickness to be equal to or greater than the H (height) dimension of the cross seam, angle bracing or reinforcing member.

c. Seam minimum 1½" wide longitudinal jacket laps continuously with vapor barrier lap adhesive. Lap circumferential joints with 4" wide jacket material and seal laps continuously with vapor barrier lap adhesive, or seal continuously with a minimum 3" wide pressure sensitive sealing tap, of the same material as the jacket. Install metal corner angles or prefabricated corner angle tape, over the jacketed insulated corners. Seal exposed ends of insulation with vapor barrier mastic. Vapor seal all breaks in vapor barrier jacketing, all exposed surfaces of duct insulation fasteners and metal corner angles, with pressure sensitive sealing tape of the same material as the jacket or coat with vapor barrier mastic.

d. Trapeze Hangers: Place trapeze hangers, fabricated of steel rods and structural steel channels or angles, outside the jacketed insulated ducts. Install high-density insulation pieces, of thickness equal to the insulation, a minimum of 4" in width by the bottom dimension of the duct, at all points of support. Continuously jacket all insulated ducts and filler pieces through all supports.

e. Miscellaneous Board Insulation Application: Insulate air handling equipment, not furnished with a factory applied insulated jacket or internal insulation as specified under sections of this specification, with fibrous glass board with a Class 1 jacket, installed and finished as specified for exposed ductwork in a finished space.

f. Provide Flexible board: When surface applications are not conducive for the use rigid board insulation. For use on round or radius equipment or ductwork. Application of flexible board insulation shall be as directed for rigid board application.

C. Blanket Insulation:

1. Blanket Insulation Application: Install insulation with all longitudinal joints overlapped a minimum of 2" and butt or lap all circumferential joints. Secure longitudinal and circumferential joints with flare door staples. Install duct insulation fasteners on the bottom side of all horizontal duct runs, when the bottom dimension of the duct is in excess of 32" in width. Install duct insulation fasteners on the sides of all duct risers having a dimension over 24" in size. Space fasteners in accordance with the following schedule:

DUCT DIMENSION	SPACING OF FASTENERS (Min.)
Up to 32”	None required on horizontal runs, 1 row – 16” on center on all duct riser sides over 24” in size.
33” to 48”	2 rows – 16” on centers
49” to 60”	3 rows – 16” on centers
61” and over	16” on center in all directions.

2. Trapeze Hangers: Place trapeze hangers, fabricated of steel rods and structural steel channels or angles, outside the jacketed insulated ducts.

Install high-density insulation pieces, of thickness equal to the insulation, a minimum of 4" in width by the bottom dimension of the duct, at all points of support. Continuously jacket all insulated ducts and filler pieces through all supports.

D. Bench Insulated Ductwork:

1. Insulate ducts prior to erection in place when ducts are required to be installed proximate to walls, ceilings, equipment, structural steel or other ductwork, which will not permit adequate space for the installation of insulation, at a later date. Exercise reasonable care in the installation of bench insulated ductwork, so that insulated surfaces are in perfect condition before and after installation.

3.04 SCHEDULE OF ITEMS NOT TO BE INSULATED

A. Do not insulate the following ductwork items:

1. Return fans.
2. Exhaust fans.
3. Flexible fabric ductwork connections.
4. Sound absorbers.

Note: Provide exterior duct insulation on lined ductwork. The exterior duct insulation R-value may be reduced such that the minimum combined R-value of the liner and ext insulation meets or exceeds minimum required R-value.

3.05 FIELD QUALITY CONTROL

A. Field Samples: The Owner may at their discretion, take field samples of installed insulation for the purpose of checking materials and application. Re-insulate sample cut areas.

END OF SECTION 230713

MP:xx

SECTION 230719

PIPING INSULATION

PART 1 GENERAL

1.01 SUBMITTALS

A. General: Submit each item in this Article according to the Conditions of the Contract and Division 1 Specification Sections.

B. Insulation Schedule: Schedule shall list all systems and indicate by system the type of insulation, jacketing, etc, to include manufacturer's model number and size for each service application.

C. Product Data for each Insulation type. Manufacturer's catalog sheets, specifications, and installation instructions for each item specified, excluding Miscellaneous Materials.

1.02 DEFINITIONS

A. Cold Service Insulation: Insulation on piping and/or equipment conveying fluids at below ambient temperatures.

B. Hot Service Insulation: Insulation on piping and/or equipment conveying fluids at above ambient temperatures.

C. Dual temperature service shall follow cold service requirements.

1.03 QUALITY ASSURANCE

A. Qualifications: The persons and supervisors performing the Work of this section shall be personally experienced in installing insulation and shall have been regularly performing such work for a minimum of 3 years while in the employ of a company or companies engaged in the installation of piping insulation.

B. Regulatory Requirements:

1. Insulation installed inside buildings, including laminated jackets, mastics, sealants and adhesives shall have a Fire Spread/Smoke Developed Rating of 25/50 or less based on ASTM E 84.

PART 2 PRODUCTS

2.01 INSULATION

A. (Type-A) Fibrous Glass (Mineral Fiber) Insulation: Composed principally of fibers manufactured from rock, slag, or glass, with or without binders, and asbestos

free.

1. Preformed Pipe Insulation: Minimum density 3 pcf; ASTM 547:
   a. Class 1 (Suitable for Temperatures Up to 450 degrees F): K of 0.26 at 75 degrees F.
2. Premolded Fitting Insulation: Minimum density 4.0 pcf, K of 0.26 at 75 degrees F; ASTM C 547, Class 1.
3. Insulation Inserts for PVC Fitting Jackets: Minimum density 1.5 pcf, K of 0.28 at 75 degrees F; ASTM C 553, Type III.
   a. Suitable for temperatures up to 450 degrees F.

B. (Type-B) Flexible Elastomeric Foam Insulation:

1. FM tested and approved, meeting the following:
   a. Maximum Water Vapor Transmission: 0.10 perm - inch based on ASTM E 96, Procedure A.
   b. K of 0.27 at 75 degrees F based on ASTM C 518 or C 177.
   c. Fire Spread/Smoke Developed Rating: 25/50 or less based on ASTM E 84.
2. Pipe Insulation: ASTM C 534, Type I.
3. Polyethylene and polyolefin insulation is not acceptable.

2.02 JACKET MATERIAL

A. All Purpose Jacket: Vapor barrier type, factory or field applied over fiberglass insulation, comprised of a Kraft paper outer cover bonded to aluminum foil, and reinforced with fiberglass yarn. Jacket material shall be treated for permanent fire and smoke resistance. A vapor barrier jacket seal shall be accomplished with a 1-1/2" longitudinal flap, and 3" wide butt strips, factory supplied, for making circumferential joints.

1. Fire and Smoke Hazard Classification Rating (composite, including jacket and adhesive, ASTM E-84):
   a. Flame Spread: 25 or less.
   b. Smoke Developed: 50 or less.
2. Water Vapor Permeability (ASTM E-96): 0.02 perm.
3. Tensile Strength: 40 lb./in. width.
4. Mullen Burst: 70 psi.

B. Aluminum Jacket: ASTM B 209, 3003 Alloy, H-14 temper, factory cut and rolled to indicated sizes, fittings and pipe. As manufactured by: ITW Insulation Systems Houston Texas, Pabco-Childers or approved

1. Finish and Thickness: Smooth finish, 0.016 inch thick.
2. Moisture Barrier: 3-mil Dupont Surlyn.

C. Waterproof Membrane:

Waterproofing, High performance prefabricated 13-ply self-adhering, sheet-type waterproofing membrane with flexible aluminum material. Jacketing shall perform –30 degF to +300 degF service temperature. Zero weather and vapor moisture permeability, high puncture / tear resistance, mold inhibiting agents. Apply materials in complete accordance with the manufacturer's printed instructions manual. Furnish color (aluminum or white) as directed by Architect. Provide VentureClad Plus 1579CW or acceptable equal.

2.03 FITTING INSULATION

A. Fiberglass Insulation System:

1. Pre-molded fitting insulation: Same thickness as the adjacent pipe covering.
   a. Conform to FS-HH-I-558C, Form E, Class 16.
2. PVC/Fiberglass Fitting Insulation: Polyvinyl chloride pre-molded flexible fitting cover with batt type, pre-cut fiberglass insert.
   a. PVC: Conform with FS L-P-535C, Composition A, Type II, Grade GU.
   b. Fiberglass: Conform with FS HH-I-558C, Form B, Type I, Class 7&8.
3. Miter Cut Fitting Insulation: Fabricated from materials employed for pipe insulation.

B. Flexible Elastomeric Foam Insulation System: Miter cut fitting insulation, fabricated from materials employed for pipe insulation.

2.04 MISCELLANEOUS MATERIALS

A. Adhesive:

1. Vapor Barrier Jacket Adhesive: Foster Products Division, 85-20, Childers, CP-82, Epolux, Cad-o-prene, 400.
2. Reinforcing Membrane Adhesive: Foster Products Division 30-36; Childers, CP-50; Epolux, Cadalag 336.
3. Flexible Elastomeric Foam Adhesive: Foster Products Division, 85-75; Epolux, Cad-o-prene, 488; Armstrong, 520.

B. Joint Sealant for Fiberglass Insulation: Foster Products Division, 30-45; Childers, CP-30; Epolux, 670.

C. Vapor Barrier Coating: Foster Products Division, 30-35; Childers, CP-30; Epolux, 670.

D. Cement:

1. Insulating Cement: ASTM C195, asbestos free.
2. Finishing Cement: ASTM C449/C449M.

E. Reinforcing Membrane:

1. Polyester Cloth: 8 x 8 mesh per sq. in., 0.7 oz. per sq. yd.; Foster Products Division, Mast-a-fab.
2. Glass Yarn Cloth: 20 x 20 mesh per sq. in.; Johns-Manville, Duramesh fabric.

F. Sealing Tape: Vapor barrier, color matching, of same material as the pipe or fitting cover to which applied; as manufactured by Arno Inc., Compac Corp., Fasson Adhesive Co.; or as recommended by the manufacturer of the jacket material to which applied.

G. Banding Wire: Steel, 20 gauge, galvanized; annealed.

H. Thumb Tack Fastener: Stainless steel, with serrated shank.

I. Insulation Inserts (for Hangers and Supports):

1. Inserts, High Density Insulation for use with Fibrous Glass Insulation:
   a. Cold Service Piping:
      i. Polyurethane Foam: Minimum density 4 pcf, K of 0.13 at 75 degrees F, minimum compressive strength of 125 psi.
   b. Hot Service Piping:
      i. Calcium Silicate: Minimum density 15 pcf, K of 0.50 at 300 degrees F; ASTM C 533.
      ii. Perlite: Minimum density 12 pcf, K of 0.60 at 300 degrees F; ASTM C 610.
3. Inserts for use with Elastomeric Foam Insulation only:
   a. Cold and Hot Service Piping:
      i. Hardwood dowels and blocks, length or thickness equal to insulation thickness, other dimensions as specified or required.

J. Wood Blocks: Hardwood, preservative treated; 1" wide, 3" minimum length; inner and outer surfaces contoured to fit the curvature of the pipe, and insulation shield. Wood blocking is not acceptable for use on heating systems with fiberglass insulation, and will require removal if used.

K. Wood Dowel Plugs: Hard wood, preservative treated.

L. Wood Preservative: Pentachlorophenol, 5% solution, 3 minute dip.

PART 3 EXECUTION

3.01 PREPARATION

A. Do not install insulation until the piping Work has been tested and accepted.

B. Clean and dry all Work to be insulated prior to applying insulation.

3.02 INSTALLATION, GENERAL

A. Install the Work of this section in accordance with the manufacturer's printed installation instructions, except as specified otherwise.

3.03 INSTALLATION OF FIBERGLASS INSULATION

A. Seal jacket longitudinal flap with vapor barrier jacket adhesive. Rub out all wrinkles and smooth excess sealant flush with outer surface of jacket.

B. Apply a coating of vapor barrier jacket adhesive to butt ends of each section of insulation to be joined, and apply butt strips in like manner as above. Apply butt strips to overlap 1-1/2" on each side of the sections joined.

C. PVC/Fiberglass Fitting Insulation: Tuck the ends of the pre-cut insulation batt snugly into the throat of the fitting, tuft and tuck-in the edges adjacent to the pipe insulation. Install fitting cover and seal as follows:

1. Cold Service Insulation: Seal the overlap in the throat of the fitting cover, and the butt joint of the cover with the adjacent pipe insulation, with vapor barrier mastic and 2" wide sealing tape (a product of the fitting cover manufacturer). Extend the tape 1" over the adjacent pipe insulation and overlap upon itself at least 2" on the downward side.
2. Hot Service Insulation: Secure the cover with staples, thumb tack fasteners, or sealing tape.

D. Pre-Molded and Miter Cut Fitting Insulation: Insulate to the same thickness as the adjoining pipe insulation. Apply joint sealant to the mating edges of the sections, and to the butt joint. Secure sections together with banding wire; bend twisted ends into the insulation. Apply a leveling coat of insulating cement to fill the voids and smooth irregularities.

1. Cold Service Insulation: Cover fitting insulation with two 1/8" thick applications of vapor barrier coating, with a layer of reinforcing membrane bedded between coats. Lap membrane at least 2" over itself, and the adjacent pipe insulation. Apply a 6 ounce canvas jacket over the fitting, secured with adhesive. Lap canvas at least 2" over itself, and the adjacent pipe insulation.
   a. Omit canvas on concealed installations.

2. Hot Service Insulation: Apply a 6 ounce canvas jacket to the fitting insulation, secured with adhesive. Lap canvas at least 2" over itself.
   a. Omit canvas on concealed installations.

E. Vapor Stop for Cold Service Insulation:

1. Pipe Insulation: At 21 foot intervals of horizontal, and 9 foot intervals of vertical pipe insulation, also at each fitting insulated with pre-molded or

miter cut fitting insulation, apply a 1/16" thickness of vapor barrier coating to the butt end, and 2" into the bore of each joining section before assembling.

2. Insulation Termination; Metal to Insulation Joints; Protrusions Through Insulation:
   a. Apply a vapor barrier coating to completely seal the joint and extend over adjacent insulation and metal a maximum of 3 inches.
   b. Embed reinforcing membrane into the coating, covering the complete coated surface; smooth out wrinkles.
   c. Apply a heavy application of vapor barrier coating over the entire surface, leaving a large bead or fillet at the joint between metal and insulation.

F. Insulated Piping Exposed to view in finished spaces:
   1. Provide PVC pipe and fitting jacketing, from 8’-0” aff or finished ceiling (which ever is higher) down to point of concealment.
   2. Provide aluminum pipe and fitting jacketing, from 8’-0” aff or finished ceiling (which ever is higher) down to point of concealment.

G. Insulated Piping installed exterior to the building, exposed to the elements:

   1. Pipe supports shall not be in direct contact with pipe, supports must to the exterior of the insulation and jacketing.

   2. Provide continuous PVC pipe and fitting jacketing, caulked / sealed weather tight, from exit point of building to termination point (to include termination connections).

   3. Provide continuous Waterproof Membrane jacketing on insulated pipe and fittings with insulation OD is 6” or larger, from exit point of building to termination point (to include termination connections).

   4. Provide continuous Aluminum pipe and fitting jacketing, caulked / sealed weather tight, from exit point of building to termination point (to include termination connections).

3.04 INSTALLATION OF FLEXIBLE ELASTOMERIC FOAM INSULATION

A. Where possible, slip insulation over the pipe, and seal butt joints with adhesive. Where the slip-on technique is not possible, slit the insulation and install; re-seal with adhesive, making sure the mating surfaces are completely joined.

B. Insulate fittings and valves with miter cut sections. Use templates provided by the manufacturer, and assemble the cut sections in accordance with the manufacturer's printed instructions.

   1. Insulate threaded fittings and valves with sleeved fitting covers. Over lap and seal the covers to the adjoining pipe insulation.

C. Carefully mate and seal with adhesive all contact surfaces to maintain the integrity of the vapor barrier of the system.

D. Insulated Piping installed exterior to the building, exposed to the elements:

1. Pipe supports shall not be in direct contact with pipe, supports must to the exterior of the insulation and jacketing.

2. Apply two coats of weatherproof mastic, on piping where the insulation OD is 3” or less.

3. Provide continuous PVC pipe and fitting jacketing on piping where the insulation OD is 4” or larger, caulked / sealed weather tight, from exit point of building to termination point (to include termination connections).

4. Provide continuous Waterproof Membrane jacketing on insulated pipe and fittings with insulation OD is 6” or larger, from exit point of building to termination point (to include termination connections).

5. Provide continuous Aluminum pipe and fitting jacketing, caulked / sealed weather tight, from exit point of building to termination point (to include termination connections).

3.05 INSTALLATION AT HANGERS

A. Reset and realign hangers and supports if they are displaced while installing the piping insulation.

B. Direct hanger or clamp contact of pipe for hot or cold piping is not allowed.

C. Fiberglass Insulation: Install high density insulation filler pieces, at all points of support, between pipe insulation shields and pipe or tubing on pipe or tubing 2” and larger. Do not install high-density insulation filler pieces on piping or tubing scheduled to have steel saddles. Install filler pieces of the same thicknesses as adjoining pipe insulation and 2" longer than the insulation shield of the following materials:

1. Install high density molded polyurethane or high-density polystyrene filler pieces, for pipe or tubing insulated with fiberous glass.

D. Flexible Elastomeric Foam Insulation: Install wood blocking or wood dowel plug filler pieces of the same thickness as the insulation. Slot the insulation, insert the filler pieces between the pipe and insulation shield, and secure in place with adhesive. Install filler pieces as follows:

PIPE/TUBING SIZE	FILLER PIECES	POSITION
Thru 1½"	2 dowel plugs	6 o'clock; in tandem

2" thru 4"	1 block 2 dowel plugs	6 o'clock, and 4&8 o'clock, respectively
6" thru 8"	2 blocks 4 dowel plugs	6 o'clock; in tandem and 4&8 o'clock; in tandem

3.06 INSULATION SCHEDULES

A. General: Provide insulation as scheduled below, insulate all HVAC systems provided in this project in compliance with NYS Energy Code. Where the insulation scheduled or noted in the construction documents exceeds the Energy Code, the greater requirement shall be provided. HVAC Systems provided require insulation per the Energy Code, but not indicated in the schedule below, shall be insulated as part of this project..

APPLICATION	PIPE SIZE	TYPE	MINIMUM THICKNES S	ADD'L
Hot Water (HWS & HWR)	1-1/4" or less	A	1½"	
	1-1/2" and above	A	2"	
Condensate Drain (CD)	1-1/4" or less	A or B	1/2"	
	1-1/2" and above	A or B	1"	
Refrigerant	1-1/4" or less	B	1½"	
	1-1/2" and above	B	2"	
Cold Services: Equipment, vessels and appurtenances for conveying, storing or processing materials, at or below ambient temperature	All	A or B	1½"	
Hot Services: Equipment, vessels and appurtenances for conveying, storing or processing materials, at or above ambient temperature	All	A or B	1½"	

Insulate all cold and hot service equipment in accordance with the schedule, except the items listed below:

A. Air vents, pressure reducing valves, pilot lines, safety valves, relief valves; back pressure valves.
B. Flexible connectors.
C. Piping buried in the ground, unless otherwise specified herein.

D. Items installed by others, unless otherwise specified herein.

B. Install all cold and hot service insulation intact through pipe sleeves, and openings in building construction, maintaining the vapor barrier integrity of the system.

C. Insulate valve bodies up to but not including the packing nuts.

D. Flanges and mechanical couplings and fittings (grooved fittings) shall be insulated with the insulation thickness specified for that system. Provide molded PVC fitting on all grooved fittings.

E. Coordinate with the equipment manufacturers requirements, provide field insulated equipment components or system components as recommended (IE: refrigerant line, boiler headers, cross over piping, etc) per manufacturer.

F. Insulation Options: Select only one of the first 3 options for fiberglass pipe and/or equipment insulation. Option 4 may be used for temperatures to 200 degrees F and on sizes of 2 inches and under. Use fiberglass on pipe and equipment sizes of 2-1/2 inches and larger. Do not inter mix insulation types on individual runs of piping.
1. Option 1: Fiberglass pipe and/or equipment insulation, with pre-molded fitting insulation.
2. Option 2: Fiberglass pipe and/or equipment insulation, with PVC/fiberglass fitting insulating system.
3. Option 3: Fiberglass pipe and/or equipment insulation, with miter cut fitting insulation.
4. Option 4: Flexible elastomeric foam pipe and/or equipment insulation, with miter cut fitting insulation.

3.01 FIELD QUALITY CONTROL

A. Field Samples: The Owner may at their discretion, take field samples of installed insulation for the purpose of checking materials and application. Re-insulate sample cut areas.

END OF SECTION 230719

MP:xx

SECTION 230800

COMMISSIONING OF HVAC SYSTEMS

PART 1 - GENERAL

1.1 RELATED DOCUMENTS

A. Drawings and general provisions of the Contract, including General and Supplementary Conditions and other Division 1 Specification Sections, apply to this Section.

B. OPR and BoD documentation are included by reference for information only.

1.2 SUMMARY

A. This section includes general requirements that apply to implementation of the commissioning process without regard to specific systems, assemblies, and components.

B. Related Sections including the following:

1. Division 22 Section “Commissioning of Plumbing” for commissioning process activities for plumbing systems, assemblies, equipment, and components.
2. Division 26 Section “Commissioning of Electrical” for commissioning process activities for electrical systems, assemblies, equipment and components.

1.3 DEFINITIONS

A. BoD: Basis of Design. A document, prepared by Architect, that record concepts, calculations, decisions, and product selection used to meet the OPR and to satisfy applicable regulator requirements, standard and guidelines. The document includes both narrative descriptions and lists of individual items that support the design process.

B. Commissioning Plan: A document, prepared by CxA, that outlines the organization, schedule, allocation of resources, and documentation requirements of the commissioning process.

C. CxA: Commissioning Authority.

D. OPR: Owner’s Project Requirements. A document, prepared by Owner that details the functional requirements of Project and expectations of how it will be used and operated. This document includes Project goals, measurable performance criteria, cost considerations, benchmarks, success criteria, and supporting information.

E. Systems, Assemblies, Equipment and Components: Where these terms are used together or separately, they shall mean “as-built” systems, assemblies, equipment and components.

1.4 COMMISSIONING TEAM

A. Members Appointed by Contractor(s): Individuals, each having authority to act on behalf of the entity he or she represents, explicitly organized to implement the commissioning process through coordinated actions. The commissioning team shall consist of, but not be limited to, representatives of each Contractor, including Project superintendent and subcontractors, installers, suppliers, and specialists deemed appropriate by the CxA.

B. Members Appointed by Owner:

1. CxA: An entity identified by the Owner who leads, plans, schedules, and coordinates the commissioning team to implement the commissioning process. Owner will engage the CxA under a separate contract.
2. Representatives of the facility user and operation and maintenance personnel.
3. Architect and engineering design professionals.

1.5 OWNER'S RESPONSIBILITIES

A. Provide the OPR documents to the CxA and each Contractor for information and use.

B. Assign operation and maintenance personnel and schedule them to participate in commissioning team activities.

C. Provide the BoD documents, prepared by Architect and approved by Owner, to the CxA and each Contractor for use in developing the commissioning plan, systems manual, and operation and maintenance training plan.

1.6 CONTRACTOR'S RESPONSIBILITIES

A. Contractor and their subcontractors shall assign representatives with expertise and authority to act on their behalf and schedule them to participate in and perform commissioning process activities including, but not limited to, the following:

1. Evaluate performance deficiencies identified in test reports and, in collaboration with entity responsible for system and equipment installation, recommend corrective action.
2. Cooperate with the CxA for resolution of issues recorded in "Issues Log."
3. Attend and participate in commissioning team meetings held on a variable basis.
4. Integrate and coordinate commissioning process activities with construction schedule.
5. Review and accept construction checklist provided by the commissioning authority.
6. Complete paper or electronic construction checklists as Work is completed and provide to the commissioning authority on a monthly basis.
7. Review and accept commissioning process test procedures provided by the commissioning authority.
8. Accomplish commissioning process test procedures.

1.7 CxA'S RESPONSIBILITIES

A. Organize and lead the commissioning team.

B. Provide commissioning plan

C. Convene commissioning team meetings.

D. Provide Project-specific construction checklists and commissioning process test procedures.

E. Verify the execution of commissioning process activities using random sampling. The sampling rate may vary from 1 to 100 percent. Verification will include, but is not limited to, equipment submittals, construction checklists, training, operating and maintenance data, tests, and test reports to verify compliance with the OPR. When a random sample does not meet the requirement, CxA will report the failure in the "Issue Log."

F. Prepare and maintain issues log.

G. Prepare and maintain completed construction checklist log.

H. Witness systems, assemblies, equipment, and component startup.

I. Compile test data, inspection reports, and certificates and include them in the systems manual and commissioning process report.

PART 2 - PRODUCTS (not used)

PART 3 - EXECUTION

3.1 SYSTEMS TO BE COMMISSIONED

A. Systems to be commissioned shall include, but not limited to the following systems and equipment. Contractor shall coordinate with the commissioning agents Cx plan for a complete list of systems and equipment.

1. Mechanical Systems
   - a. Air Handling Systems
   - b. Heating Hot Water Systems
   - c. Exhaust Fans
   - d. Variable Refrigerant Flow Systems
2. Automatic Temperature Controls

END OF SECTION 230800

MP:xx

SECTION 230900

INSTRUMENTATION AND CONTROL FOR HVAC

PART 1 - GENERAL

1.1 BUILDING AUTOMATION SYSTEM - GENERAL DESCRIPTION

A. Provide a new Building Automation System (BAS) to integrate and control all mechanical equipment associated with this project.

1. The Building Automation System shall be as indicated on the drawings and described in these specifications. System must be fully integrated and coordinated with mechanical equipment DDC controllers furnished and installed in the equipment manufacturer's factory as specified in those sections. The intent of the BAS is to integrate all mechanical equipment into one system for global monitoring, control, and alarming associated with the building. It is the BAS manufacturer's responsibility to provide all the design, engineering, and field coordination required to ensure all equipment sequence of operations are met as specified and the designated BAS operators have the capability of managing the building mechanical system to ensure occupant comfort while maintaining energy efficiency.
2. The BAS shall meet open standard protocol communication standards (As defined in System Communications Section) to ensure the system maintains "interoperability" to avoid proprietary arrangements that will make it difficult for the Owner to consider other BAS manufacturers in future projects.
3. Direct Digital Control (DDC) technology shall be used to provide the functions necessary for control of mechanical systems and terminal devices on this project.
4. Approved vendors, products and web services shall comply with SOC2 Type I as defined by the AICPA. SOC2 Type 1 compliance is a certification that confirms that a service provider has established and implemented effective controls to secure their clients' data in accordance with the Trust Services Criteria (TSC).
   a. SOC2 Type 1 compliance provides assurance to customers that the service provider has established and implemented effective security controls and is committed to protecting their data.
   b. To achieve SOC2 Type 1 compliance, the manufacturer shall have completed an independent audit to assess design and implementation of their controls, policies, and procedures.
5. The BAS shall accommodate simultaneous multiple user operation. Access to the control system data should be limited only by the security permissions of the operator role. Multiple users shall have access to all valid system data. An operator shall be able to log onto any workstation on the control system and have access to all appropriate data.

1.2 APPROVED CONTROL SYSTEM MANUFACTURES

A. Approved BAS Manufacturers
   1. Trance Tracer
   2. Honeywell International Inc.
   3. Johnson Controls, Inc.; Controls Group.
   4. Siemens Building Technologies, Inc.

1.3 QUALITY ASSURANCE

A. BAS Manufacturer Qualifications
   1. The BAS manufacturer shall have an established business office within 50.00 miles of the project site and must provide 24 hours/day, 7 days/week response in the event of a customer warranty or service call.
   2. The BAS Manufacturer shall have factory trained and certified personnel providing all engineering, service, startup, and commissioning field labor for the project from their local office location. BAS manufacturer shall be able to provide training certifications for all local office personnel upon request.
   3. The BAS shall be provided by a single manufacturer and this manufacturer's equipment must consist of operator workstation software, Web-based hardware/software, Open Standard Protocol hardware/software, Custom application Programming Language, Graphical Programming Language, Building Controllers, Custom Application Controllers, and Application Specific Controllers. All other products specified herein (i.e., sensors, valves, dampers, actuators, etc.) need not be manufactured by the BAS manufacturer listed in this specification.
   4. Independent representatives of BAS manufacturers are not acceptable. BAS vendor must be corporate owned entity of BAS manufacturer.

1.4 CODES AND STANDARDS

A. Codes and Standards: Meet requirements of all applicable standards and codes, except when more detailed or stringent requirements are indicated by the Contract Documents, including requirements of this Section.
   1. Underwriters Laboratories: Products shall be UL-916-PAZX listed.
   2. National Electrical Code -- NFPA 70.
   3. Federal Communications Commission -- Part J.
   4. ASHRAE/ANSI 135-2012 (BACnet) - (System Level Devices) - Building Controllers shall conform to the listed version of the BACnet specification in order to improve interoperability with various building system manufacturers' control systems and devices.
   5. ASHRAE/ANSI 135-2012 (BACnet) - (Unit Level Devices) - Unit Controllers shall conform to the listed version of the BACnet specification in order to improve interoperability with various building system manufacturers' control systems and devices.

1.5 SYSTEM PERFORMANCE

A. Performance Standards. The BAS system shall conform to the following:
   1. Graphic Display. The system shall display a graphic with a minimum of 20 dynamic points. All current data shall be displayed within 10 seconds of the operator's request.
   2. Graphic Refresh. The system shall update all dynamic points with current data within 10 seconds.
   3. Object Command. The maximum time between the command of a binary object by the operator and the reaction by the device shall be 5 seconds. Analog objects shall start to adjust within 5 seconds.
   4. Object Scan. All changes of state and change of analog values shall be transmitted over the high-speed network such that any data used or displayed at a controller or workstation will be current within the prior 10 seconds.
   5. Alarm Response Time. The maximum time from when an object goes into alarm to when it is annunciated at the workstation shall not exceed 10 seconds.
   6. Program Execution Frequency. Custom and standard applications shall be capable of running as often as once every 5 seconds. The Contractor shall be responsible for selecting execution times consistent with the mechanical process under control.
   7. Programmable Controllers shall be able to execute DDC PID control loops at a selectable frequency from at least once every 5 seconds. The controller shall scan and update the process value and output generated by this calculation at this same frequency.
   8. Multiple Alarm Annunciations. All workstations on the network shall receive alarms within 5 seconds of each other.

1.6 SUBMITTAL REQUIREMENTS

A. BAS manufacturer shall provide shop drawings and manufacturers' standard specification data sheets on all hardware and software being provided for this project. No work may begin on any segment of this project until the Engineer and Owner have reviewed submittals for conformity with the plan and specifications.
   1. Provide three (3) printed copies of submittal package for review and approval.

B. Quantities of items submitted shall be reviewed by the Engineer and Owner. Such review shall not relieve the BAS manufacturer of furnishing quantities required based upon contract documents.

C. Provide the Engineer and Owner, any additional information or data which is deemed necessary to determine compliance with the specifications or which is deemed valuable in documenting and understanding the system to be installed.

D. All shop drawings shall be provided to the Owner electronically as .dwg or .dxf file formats once they have been approved and as-built drawings have been completed.

E. Submit the following within 90 days of contract award:
   1. A complete bill of materials of equipment to be used indicating quantities, manufacturers and model numbers.

2. A schedule of all control valves including the valve size, pressure drop, model number (including pattern and connections), flow, CV, body pressure rating, and location.
3. A schedule of all control dampers including damper size, pressure drop, manufacturer, and model number.
4. Provide all manufacturers' technical cut sheets for major system components. When technical cut sheets apply to a product series rather than a specific product, the data specifically applicable to the project shall be highlighted or clearly indicated by other means. Include:
   a. Building Controllers
   b. Custom Application Controllers
   c. Application Specific Controllers
   d. Operator Workstations
   e. Portable Operator Terminals
   f. Auxiliary Control Devices
5. Provide proposed Building Automation System architectural diagram depicting various controller types, workstations, device locations, addresses, and communication cable requirements
6. Provide detailed termination drawings showing all required field and factory terminations, as well as terminal tie-ins to DDC controls provided by mechanical equipment manufacturers. Terminal numbers shall be clearly labeled.
7. Provide a sequence of operation for each controlled mechanical system and terminal end devices.
8. Provide a BACnet Protocol Implementation Conformance Statement (PICS) for each BACnet system level device (i.e. Building Controller & Operator Workstations) type. This defines the points list for proper coordination of interoperability with other building systems if applicable for this project.

F. Project Record Documents : Upon completion of installation, submit three (3) copies of record (as-built) documents. The documents shall be submitted for approval prior to final completion and include:
1. Project Record Drawings - These shall be as-built versions of the submittal shop drawings. One set of electronic media including CAD .dwg and .pdf drawing files shall be provided.
2. Testing and Commissioning Reports and Checklists signed off by trained factory (equipment manufacturers) and field (BAS) commissioning personnel.
3. Operating and Maintenance (O & M) Manuals - These shall be as-built versions of the submittal product data. In addition to the information required for the submittals, Operating & Maintenance manual shall include:
   a. Procedures for operating the BAS including logging on/off, alarm management, generation of reports, trends, overrides of computer control, modification of setpoints, and other interactive system requirements.
   b. Explanation of how to design and install new points, new DDC controllers, and other BAS hardware.
   c. Documentation, installation, and maintenance information for all third party hardware/software products provided including personal computers, printers, hubs, sensors, valves, etc.

d. Original issue media for all software provided, including operating systems, programming language, operator workstation software, and graphics software.
e. Licenses, Guarantee, and Warranty documents for all equipment and systems.

G. Training Manuals: The BAS manufacturer shall provide a course outline and copies of training manuals at least two weeks prior to the start of any corporate training class to be attended by the Owner.

1.7 WARRANTY REQUIREMENTS

A. Warrant all work as follows:
1. BAS system labor and materials shall be warranted free from defects for a period of twelve (12) months after final completion acceptance by the Owner. BAS failures during the warranty period shall be adjusted, repaired, or replaced at no charge to the Owner. The BAS manufacturer shall respond to the Owner's request for warranty service within 24 hours of the initiated call and will occur during normal business hours (8AM-5PM).
2. At the end of the final start-up/testing, if equipment and systems are operating satisfactorily to the Owner and Engineer, the Owner shall sign certificates certifying that the BAS is operational, and has been tested and accepted in accordance with the terms of this specification. The date of Owner's acceptance shall be the start of the warranty period.
3. To ensure that the owner will have the most current operating system provided by the manufacturer, the BAS manufacturer shall include licensing and labor costs to facilitate software/firmware updates throughout the warranty period at no charge to the owner. These updates shall include upgrades for functional enhancements associated with the following: operator workstation software, project specific software, graphics, database, firmware updates, and all security related service packs. Written authorization by the Owner must be granted prior to the installation of these updates.
4. The BAS manufacturer shall provide web-accessible Users Network for the proposed System and give the Owner free access to question/answer forum, user tips, upgrades, and training schedules for a one year period of time correlating with the warranty period.

1.8 SYSTEM MAINTENANCE AND REMOTE ANALYSIS

A. The BAS Manufacture shall provide Building Automation System remote support and system analysis for a period of 1 year (beginning the date of substantial completion).

B. The BAS manufacturer shall setup a secure remote connection for data collection, analytics and remote technical support for the HVAC systems included in this contract.
1. Provide technician support during the warranty period to diagnose issues remotely through the secure remote connection.
2. The building owner is responsible for providing adequate internet access.

C. Connectivity / Remote Access / Network Security

1. Provide and maintain secure remote access to the facilities Building Automation System (BAS) or other building systems. Users accessing service through this connection shall not have access to the building owners network. Secure remote access to the BAS shall not require ANY inbound ports on a firewall to be "exposed" or "forwarded".
2. Secure remote access to the BAS shall be available anywhere, anytime, using a compatible client device (PC/tablet/phone).
3. The Owner will provide up to Three (3) IP drops and IP addresses on the owners network to gain access to the internet. The BAS manufacture shall coordinate with the Owners IT team, verify the proposed system shall meet all network security requirements and any other network configuration information necessary to each control contractor for the purpose of configuring each Area Controller on the network. It shall be the responsibility of the BAS manufacture to coordinate with the owner for network connectivity.

D. The BAS Manufacture shall provide a professional analysis for the facility HVAC systems.
1. The analysis shall consist of an evaluation of HVAC systems including charts and graphs which indicate both current building performance and opportunities for building and HVAC system performance improvement.

E. The following shall be provided after substantial completion of the project:
1. Orientation meeting with the building owner's representative to identify the HVAC systems that will be evaluated.
2. System setup for data collection and analytics. BAS Manufacture to setup a secure remote data collection and analytics for identified systems.
3. Assessment analysis shall be performed by trained personnel with relevant professional credentials in HVAC systems, energy management and building optimization methodologies.
4. Consultation meeting with owner to review performance reports and improvement opportunities.

F. Do not assign or transfer maintenance service to agent or subcontractor without prior written consent of owner.

1.9 OWNERSHIP OF PROPRIETARY MATERIAL

A. Project specific software and documentation shall become the owner's property upon project completion. This includes the following:
1. Operator Graphic Files
2. As-built hardware design drawings
3. Operating & Maintenance Manuals
4. BAS System software database

1.10 DEFINITIONS

A. DDC: Direct digital control

B. I/O: Input/output.

C. MS/TP: Manager Subordinate / Token Passing.

D. POT: Portable Operator's Terminal.

E. PID: Proportional plus integral plus derivative.

F. RTD: Resistance temperature detector.

G. BAS/ATC: Building Automation System/Automatic Temperature Controls.

PART 2 - PRODUCTS

2.0 SECTION INCLUDES

2.1 MATERIALS:

2.2 SYSTEM COMMUNICATION

2.3 OPERATOR INTERFACE

2.4 BUILDING CONTROLLER SOFTWARE

2.5 BUILDING / SYSTEM CONTROLLERS

2.6 ADVANCED APPLICATION CONTROLLERS:

2.7 APPLICATION SPECIFIC CONTROLLER

2.8 HEATING PLANT – PUMPING CONTROLLER

2.9 APPLICATION CONTROLLER FOR PACKAGE ROOFTOP UNIT

2.10 INPUT/OUTPUT

2.11 POWER SUPPLIES:

2.12 AUXILLARY CONTROL DEVICES:

2.13 WIRING AND RACEWAYS:

2.1 MATERIALS:

A. Use new products that the manufacturer is currently manufacturing and that have been installed in a minimum of 25 installations. Do not use this installation as a product test site unless explicitly approved in writing by the owner or the owner's representative. Spare parts shall be available for at least five years after completion of this contract.

2.2 SYSTEM COMMUNICATION

A. System Communications
1. Each workstation, building controller, and equipment/plant controller communication interface shall utilize the BACnet™ protocol with an Ethernet (IEEE 802.3) or RS485 (EIA-485) physical interface and an appropriate data link technology as defined in ANSI®/ASHRAE® Standard 135-2012. (e.g. BACnet over IP, BACnet over IPv6, BACnet SC, BACnet over MS/TP).
2. All system controllers shall be BTL listed as a BACnet Building Controller (B-BC) as defined in ANSI®/ASHRAE® Standard 135-2012.
3. All documented status and control points, schedule, alarm, and data-log services or objects shall be available as standard object types as defined in ANSI®/ASHRAE® Standard 135-2012.
4. Each System Controller shall communicate with a network of Custom Application and Application Specific Controllers utilizing one or more of the interfaces documented within Field Bus Communications below.
5. All Operator Workstations (B-OWS, B-AWS) and Building Controllers (B-BC) shall support BACnet Secure Connect (BACnet SC), a secure and encrypted datalink layer specifically designed for those networks.

B. Field Bus Communications
1. BACnet™
a. All equipment and plant controllers shall be BTL listed as a BACnet Application Specific Controller (B-ASC) or a BACnet Advanced Application Controller (B-AAC) as defined in ANSI®/ASHRAE® Standard 135-2012.
b. All communication shall conform to ANSI®/ASHRAE® Standard 135-2012.
c. System Controller shall function as a BACnet router to each unit controller providing a globally unique BACnet Device ID for all BACnet controllers within the system.
d. BACnet MS/TP
1) Communication between System Controller and equipment/plant controllers shall utilize BACnet MS/TP as defined in ANSI®/ASHRAE® Standard 135-2012.

C. Variable Refrigerant Flow (VRF) Communications
1. The VRF system shall communicate with the BAS using one of the following communications methods.
a. The VRF system and the BAS shall utilize ANSI®/ASHRAE® Standard 135 (BACnet) protocol revision 12 or greater.

b. Recognizing that VRF manufacturers utilize proprietary protocols to pass information between VRF equipment components. A gateway device is an accepted method to convert proprietary data to BACnet data. BACnet data shall conform to BACnet protocol revision 12 or greater.
c. When a device is capable of data exchange with the BACnet protocol across non-IP network segments, the BACnet protocol shall be used to exchange data. If a device does not support the BACnet protocol an alternative protocol may be used. Data exchanged using the alternative protocol shall be converted to the BACnet protocol to allow integration to the BAS.

2. To promote BAS interoperability, each instance of the following VRF system components shall be visible to the BAS network as a virtual BACnet device.
   a. Indoor equipment
   b. Outdoor equipment
   c. Refrigerant manifold devices
   d. Outdoor air ventilation systems
3. Virtual BACnet device functionality shall conform to BACnet protocol revision 12 or greater and meet the minimum functionality defined by BACnet device profile B-ASC.

2.3 OPERATOR INTERFACE

A. Provide Building Operator Web Interface
1. Manufacturer shall provide a user interface with time-of-day schedules, data collection, dashboards, reports and building summary, system applications, and self-expiring timed overrides. Manufacturer shall provide a published user and applications guide(s) that detail the system application operation, configuration, setup and troubleshooting.
2. The building operator web interface shall be accessible via a web browser without requiring any “plug-ins” (i.e. JAVA Runtime Environment (JRE), Adobe Flash).
3. User Roles
   a. The system shall include pre-defined “roles” that allow a system administrator to quickly assign permissions to a user.
   b. User logon/logoff attempts shall be recorded.
   c. The system shall protect itself from unauthorized use by automatically logging off following the last keystroke. The delay time shall be user definable.
4. On-Line Help and Training
   a. Provide a context sensitive, on line help system to assist the operator in operation and configuration of the system.
   b. On-line help shall be available for all system functions and shall provide the relevant data for each particular screen.
5. Equipment and Application Pages
   a. The building operator web interface shall include standard pages for all equipment and applications. These pages shall allow an operator to obtain information relevant to the operation of the equipment and/or application, including:
      1) Animated Equipment Graphics for each major piece of equipment and floor plan in the System. This includes:

a) Each Chiller, Air Handler, VAV Terminal, Fan Coil, Boiler, and Cooling Tower. These graphics shall show all points dynamically as specified in the points list.

b) Animation capabilities shall include the ability to show a sequence of images reflecting the position of analog outputs, such as valve or damper positions. Graphics shall be capable of launching other web pages.

2) Alarms relevant to the equipment or application without requiring a user to navigate to an alarm page and perform a filter.

3) Historical Data (As defined in Trend Logs section of CONTROLLER SOFTWARE) for the equipment or application without requiring a user to navigate to a Data Log page and perform a filter.

6. System Graphics. Building operator web interface shall be graphically based and shall include at least one graphic per piece of equipment or occupied zone, graphics for each chilled water and hot water system, and graphics that summarize conditions on each floor of each building area included in this contract. Indicate thermal comfort on floor plan summary graphics using colors to represent zone temperature relative to zone set point.

a. Graphic imagery – graphics shall use 3D images for all standard and custom graphics. The only allowable exceptions will be photo images, maps, schematic drawings, and selected floor plans.

b. Animation. Graphics shall be able to animate by displaying different Image lies for changed object status.

c. Alarm Indication. Indicate areas or equipment in an alarm condition using color or other visual indicator.

7. Graphics Library. Furnish a library of standard HVAC equipment such as chillers, air handlers, terminals, fan coils, unit ventilators, rooftop units, and VAV boxes, in 3-dimensional graphic depictions. The library shall be furnished in a file format compatible with the graphics generation package program.

8. Manual Control and Override

a. Point Control. Provide a method for a user to view, override, and edit if applicable, the status of any object and property in the system. The point status shall be available by menu, on graphics or through custom programs.

b. Temporary Overrides. The user shall be able to perform a temporary override wherever an override is allowed, automatically removing the override after a specified period of time.

c. Override Owners. The system shall convey to the user the owner of each override for all priorities that an override exists.

d. Provide a specific icon to show timed override or operator override, when a point, unit controller or application has been overridden manually.

9. Scheduling. - The scheduling application shall provide graphical representation of the day, week, month and exception events.

10. Alarm/Event Notification

a. Alarm/Event Log. The operator shall be able to view all logged system alarms/events from any building operator web interface.

1) The operator shall be able to sort and filter alarms from events. Alarms shall be sorted in a minimum of 4 categories based on severity.

2) The operator shall be able to acknowledge and add comments to alarms
3) Alarm/event messages shall use full language, easily recognized descriptors.

b. Alarm Suppression. Alarms shall be able to be suppressed based on load/source relationships to present the likely root cause to the building operator as described in ASHRAE Guideline 36. Load/Source relationships shall be configurable by the user through a web interface.

11. Reports and Logs.
    a. The building operator web interface shall provide a reporting package that allows the operator to select reports.
    b. The building operator web interface shall provide the ability to schedule reports to run at specified intervals of time.
    c. The following standard reports shall be available without requiring a user to manually configure the report:
        1) All Points in Alarm Report: Provide an on demand report showing all current alarms.
        2) All Points in Override Report: Provide an on demand report showing all overrides in effect.
        3) Commissioning Report: Provide a one-time report that lists all equipment with the unit configuration and present operation.
        4) Points report: Provide a report that lists the current value of all points.
    d. The controls vendor shall provide a hardening report that summarizes the port configuration details to ensure sites have not been exposed to the Internet in alignment with Cyber Security best practices.

2.4 BUILDING CONTROLLER SOFTWARE

A. Manufacturer shall provide standard applications to deliver HVAC system control. Standard applications include Time of Day Scheduling with Optimal Start/Stop, VAV Air Systems Control, Chiller Plant Control, Historical Trend Logs and Trim and Respond. Manufacturer shall provide system optimization strategies for functions such as fan pressure optimization and ventilation optimization.

B. Furnish the following applications software for building and energy management. All software applications shall reside and run in the system controllers. Editing of applications shall occur at the building operator interface.
    1. Trend Logs
        a. The system shall harvest trend logs for defined key measurements for each controlled HVAC device and HVAC application. Trend logs shall be captured for a minimum of 5 key operating points for each piece of HVAC equipment and HVAC application and stored for no less than 1 year at 15-minute intervals. Data Logs shall be capable of being configured on an interval or change of value basis.
            a) Fan Coil
                1) Discharge Air Temperature
                2) Space Temperature Active
                3) Space Temperature Setpoint Active
                4) Air Flow Setpoint Active

5) Discharge Air Flow

b) Water Source Heat Pump
1) Discharge Air Temperature
2) Space Temperature Active
3) Space Temperature Setpoint Active
4) Air Flow Setpoint Active
5) Discharge Air Flow

c) Air Handling Unit/Rooftop (VAV)
1) Discharge Air Temperature
2) Space Temperature Active
3) Space Temperature Setpoint Active
4) Air Flow Setpoint Active
5) Discharge Air Flow

d) Air Handling Unit/Rooftop (CV)
1) Discharge Air Temperature
2) Space Temperature Active
3) Space Temperature Setpoint Active
4) Air Flow Setpoint Active
5) Discharge Air Flow
6) Heating Capacity Primary Status

e) VAV Box
1) Discharge Air Temperature
2) Space Temperature Active
3) Space Temperature Setpoint Active
4) Air Flow Setpoint Active
5) Discharge Air Flow

2.5 BUILDING / SYSTEM CONTROLLERS

A. There shall be one or more independent, standalone microprocessor based System Controllers to manage the global strategies described in CONTROLLER SOFTWARE section.
1. The controller shall provide a USB communications port for connection to a PC.
2. The operating system of the Controller shall manage the input and output communications signals to allow distributed controllers to share real and virtual point information and allow central monitoring and alarms.
3. All System Controllers shall have a real time clock and shall be able to accept a BACnet time synchronization command for automatic time synchronization.
4. Data shall be shared between networked System Controllers.
5. Serviceability – The System Controller shall have a display on the main board that indicates the current operating mode of the controller.

B. Controls manufacturer shall provide secure remote access to the Building Automation System (BAS). Secure remote access shall not require IP ports to be "exposed" (i.e. port-forwarded or external public IP addresses) to the Internet. Controls manufacturer shall update secure remote access software as necessary to follow cyber security best practices and respond to cyber security events.

2.6 ADVANCED APPLICATION CONTROLLERS:

A. Advance Application Controllers shall be used to control all equipment or applications of medium and high complexity, including but not limited to Air Handlers, Boiler Plants and Chiller Plants.

B. The Advanced Application Controller shall be capable of operating as a stand-alone controller or as a member of a Building Automation System (BAS).

C. When the Advanced Application Controller is operating as a member of a Building Automation System (BAS), the application controller shall operate as follows:
   1. Application Controller will receive operation mode commands from the BAS network controller. The BAS commands shall include but not be limited to the follow: Occupied Heat/Cool, Unoccupied Heat/Cool, Morning Warm-up, / Pre-cool, Occupied Bypass).
   2. Application Controller will provide equipment status parameters to the BAS through BACnet communication.
   3. Application Controller will operate as a stand-alone controller in the event of communication failure with the BAS.
   4. In case of communications failure, stand-alone operation shall use default values or last known values for remote sensors read over the network such as outdoor air temperature.

D. For Stand-Alone Operation of Advanced Application Controllers:
   1. Shall operate a schedule in a standalone application using a Real Time Clock with a 7 day power backup.
      a. The Controller shall have a built in schedule (assessable with or without a display)
      b. Support will be for at least 3 schedules with up to 10 events for each day of the week.
      c. Each of the 3 schedules can be Analog, Binary or Multi-State
      d. The controller shall support a minimum of 25 exceptions each with up to 10 events.

E. For ease of troubleshooting, the Controller shall support data trend logging.
   1. With a minimum of 20,000 trending points total on a controller
   2. Trends shall be capable of being collected at a minimum sample rate of once every second
   3. Shall be capable of trending all BACnet points used by controller
   4. Trends shall be capable of being scheduled or triggered.

F. To meet the sequence of operation for each application, the Controller shall use library programs provided by the controller manufacturer that are either factory loaded or downloaded with service tool to the controller.

G. Environment. Controller hardware shall be suitable for the anticipated ambient conditions.
   1. Operating conditions:
      a. Temperature: -40°F to 158°F (-40°C to 70°C)
      b. Relative Humidity: 5% to 100% RH (non-condensing)
   2. Controllers used indoors shall be mounted in a NEMA 1 enclosure at a minimum.

3. Controllers used outdoors and/or in wet ambient shall be mounted within NEMA 4 type waterproof enclosures, and shall be rated for operation at -40° F to 158° F [-40° C to 70° C].

H. Input/Output: The Controller shall have on board or through expansion module all I/O capable of performing all functionality needed for the application. Controls provided by the equipment manufacture must supply the required I/O for the equipment. In addition other controls must meet the following requirements:
1. Shall support flexibility in valve type, the controllers shall be capable of supporting the following valve control types: 0-10VDC, 0-5VDC, 4-20mA, 24VAC - 2 position.
2. Shall support flexibility in sensor type, the Controller shall be capable of reading sensor input ranges of 0 to10V, 0 to 20mA, 50ms or longer pulses, 200 to 20Kohm and RTD input.
3. Shall support flexibility in sensor type, all Analog Outputs shall have the additional capability of being programmed to operate as Universal Inputs or Pulse Width Modulation Outputs.
4. Shall support flexibility in sensor type, the Controller and/or expansion modules shall support dry and wetted (24VAC) binary inputs.
5. The controller shall support pulse accumulator for connecting devices like energy meters.
6. In order to support a wide range of devices, the Controller's binary output shall be able to drive at least 10VA each.
7. For future needs, any unused I/O that is not needed for the functionality of the equipment shall be available to be used by custom programs on the Controller and by any other controller on the network.
8. The Controller shall provide 24VAC and 24VDC power terminals sensors and other devices required.
9. The Controller shall provide a dedicated static pressure input.

I. Input/Output Expandability – The Controller shall provide the following functionality in order to meet current and future application needs:
1. For the application flexibility, the Controller shall be capable of expanding to a total of at least 100 hardware I/O terminations.
2. Expansion I/O can be mounted up to 650 ft. (200m) from control.
3. For optimized system operation, expansion I/O must communicate via an internal controller communication bus (point expansion via the BACnet MS/TP network is not allowed).

J. Serviceability – The Controller shall provide the following in order to improve serviceability of the Controller.
1. Diagnostic LEDs for power/normal operation/status, BACnet communications, sensor bus communications, and binary outputs. All wiring connections shall be clearly labeled and made to be field removable.
2. Binary and analog inputs and outputs shall use removable connectors or be connected to terminal strip external to the control box.
3. Software service tool connection through the following methods: direct cable connection to the Controller, connection through another controller on BACnet link

4. For safety purposes, the controller shall be capable of being powered by a portable computer's USB port for the purposes of configuration, programming and testing programs so that this work can be accomplished with the power off to the associated equipment.
5. The Controller software tool service port shall utilize standard off-the-shelf USB printer cable.
6. Capabilities to temporarily override the BACnet point values with built-in time expiration in the Controller.
7. To aid in service replacement, the Controller shall easily attached to standard DIN rail mounting.
8. For future expansion, the Controller shall be capable of adding sequence of operation programming utilizing service tools software with a graphical programming interface (editing or programming in line code is not permissible).
9. To aid in service replacement, the Controller shall allow for setting its BACnet address via controller mounted rotary switches that correspond to the numerical value of the address. (DIP switch methodologies are not allowed). Setting of the address shall be accomplished without the need of a service tool or power applied to the controller.
10. Controller data shall be maintained through a power failure.

K. Software Retention: All Controller operating parameters, setpoints, BIOS, and sequence of operation code must be stored in non-volatile memory in order to maintain such information for months without power.

L. Controller must meet the following Agency Compliance:
1. UL916 PAZX, Open Energy Management Equipment
2. UL94-5V, Flammability
3. FCC Part 15, Subpart B, Class B Limit
4. BACnet Testing Laboratory (BTL) listed as BACnet Advanced Application Controller (B-AAC)

2.7 APPLICATION SPECIFIC CONTROLLERS:

A. General Description
1. Application Specific Controllers (ASC) shall be microprocessor-based DDC controllers which, through hardware or firmware design, control specified equipment. They are not user programmable, but are customized for operation within the confines of the equipment they are designed to serve.
2. Zone Controllers are controllers that operate equipment that control the space temperature of single zone. Examples are controllers for VAV, Fan coil, Blower Coils, Unit Ventilators, Heat Pumps, and Water Source Heat Pumps.

B. The Application Specific Controller shall be capable of operating as a stand-alone controller or as a member of a Building Automation System (BAS).

C. When the Application Specific Controller is operating as a member of a Building Automation System (BAS), the application controller shall operate as follows:

1. Application Controller will receive operation mode commands from the BAS network controller. The BAS commands shall include but not be limited to the follow: Occupied Heat/Cool, Unoccupied Heat/Cool, Morning Warm-up, / Pre-cool, Occupied Bypass).
2. Application Controller will provide equipment status parameters to the BAS through BACnet communication.
3. Application Controller will operate as a stand-alone controller in the event of communication failure with the BAS.
4. In case of communications failure stand-alone operation shall use default values or last known values for remote sensors read over the network such as outdoor air temperature.

D. Stand-Alone Operation: Each piece of equipment specified in section "A" shall be controlled by a single controller and provide stand-alone control in the event that a BAS is not present.

E. Software
1. To meet the sequence of operation for each zone control, the controller shall use programs developed and tested by the controller manufacturer that are either factory loaded or downloaded with service tool to the controller.
2. For controlling ancillary devices and for flexibility to change the sequence of operation in the future, the controller shall be capable running custom programs written in a graphical programming language.

F. Environment: Controller hardware shall be suitable for the anticipated ambient conditions.
1. Storage: -55° to 203° F (-48° to 95° C) and 5 to 95% Rh, non-condensing.
2. Operating: -40° to 158° F (-40 to 70° C) and 5 to 95% Rh, non-condensing.
3. Controllers used indoors shall be mounted in a NEMA 1 enclosure at a minimum.
4. Controllers used outdoors and/or in wet ambient shall be mounted within NEMA 4 type waterproof enclosures, and shall be rated for operation at -40° to 158° F [-40° to 70° C].

G. Input/Output:
1. For flexibility in selection and replacement of valves, the controllers shall be capable of supporting all of the following valve control types 0-10VDC, 0-5VDC, 4-20mA, 24VAC floating point, 24VAC - 2 position (Normally Open or Normally Closed).
2. For flexibility in selection and replacement of sensors, the controllers shall be capable of reading sensor input ranges of 0 to10V, 0 to 20mA, pulse counts, and 200 to 20Kohm.
3. For flexibility in selection and replacement of binary devices, the controller shall support dry and wetted (24VAC) binary inputs.
4. For flexibility in selection and replacement devices, the controller's shall have binary output which are able to drive at least 12VA each.
5. For flexibility in selection and replacement of motors, the controller shall be capable of outputting 24VAC (binary output), DC voltage (0 to 10VDC minimum range) and PWM (in the 80 to 100 Hz range).
6. For future needs, any I/O that is unused by functionality of equipment control shall be available to be used by custom program on the controller and by another controller on the network.
7. For future expansion and flexibility, the controller shall have either on board or through expansion, 20 hardware input/output points. Expansion points must communicate with

the controller via an internal communications bus. Expansion points must be capable of being mounted up to 650ft. (200 m) from the controller. Expansion points that reqee BACnet network for communication with the controller are not allowed.

H. Serviceability – The controller shall provide the following in order to improve serviceability of the controller.
   1. Diagnostic LEDs shall indicate correct operation or failures/faults for all of the following: power, sensors, BACnet communications, and I/O communications bus.
   2. All binary output shall have LED's indicating the output state.
   3. All wiring connectors shall removable without the use of a tool.
   4. Software service tool connection through all of the following methods: direct cable connection to the controller, connection through another controller on BACnet link
   5. For safety purposes, the controller shall be capable of being powered by a portable computer for the purposes of configuration, programming, and testing programs so that this work can be accomplished with the power off to the equipment.
   6. Capabilities to temporarily override of BACnet point values with built-in time expiration in the controller.
   7. BACnet MAC Address shall be set using decimal (0-9) based rotary switches.
      a. Configuration change shall not be made in a programming environment, but rather by a configuration page utilizing dropdown list, check boxes, and numeric boxes.
   8. For ease of troubleshooting, the Controller shall support BACnet data trend logging.
      a. With a minimum of 20,000 trending points total on controller.
      b. Trends shall be capable of being collected at a minimum sample rate of once every second.
      c. Shall be capable of trending all BACnet points used by controller
      d. Trends shall be capable of being scheduled or triggered

I. Software Retention: All Zone Controller operating parameters, setpoints, BIOS, and sequence of operation code must be stored in non-volatile memory in order to maintain such information for months without power.

J. Application controller shall meet the following Agency Compliance:
   1. UL916 PAZX, Open Energy Management Equipment
   2. UL94-5V, Flammability
   3. FCC Part 15, Subpart B, Class B Limit
   4. BACnet Testing Laboratory (BTL) listed as BACnet Application Specific Controller (B-ASC)

2.8 HEATING PLANT - PUMPING CONTROLLER

A. BACnet Advanced Application Controller shall be used to control the pumping controls associated with the heating plant system.

B. The Advanced Application Controller shall be capable of operating as a stand-alone controller or as a member of a Building Automation System (BAS).

C. When the Advanced Application Controller is operating as a member of a Building Automation System (BAS), the application controller shall operate as follows:
   1. Application Controller will receive operation mode commands from the BAS network controller. The BAS commands shall include but not be limited to the follow: Occupied Heat/Cool, Unoccupied Heat/Cool, Morning Warm-up, / Pre-cool, Occupied Bypass).
   2. Application Controller will provide equipment status parameters to the BAS through BACnet communication.
   3. Application Controller will operate as a stand-alone controller in the event of communication failure with the BAS.
   4. In case of communications failure, stand-alone operation shall use default values or last known values for remote sensors read over the network such as outdoor air temperature.

D. For Stand-Alone Operation of Advanced Application Controllers:
   1. Shall operate a schedule in a standalone application using a Real Time Clock with a 7 day power backup.
      a. The Controller shall have a built in schedule (assessable with or without a display)
      b. Support will be for at least 3 schedules with up to 10 events for each day of the week.
      c. Each of the 3 schedules can be Analog, Binary or Multi-State
      d. The controller shall support a minimum of 25 exceptions each with up to 10 events.

E. For ease of troubleshooting, the Controller shall support data trend logging.
   1. 25,000 samples minimum
   2. Trends shall be capable of being collected at a minimum sample rate of once every second
   3. Trends shall be capable of being scheduled or triggered.

F. To meet the sequence of operation for each application, the Controller shall use library programs provided by the controller manufacturer that are either factory loaded or downloaded with service tool to the Controller.

G. Environment. Controller hardware shall be suitable for the anticipated ambient conditions.
   1. Storage conditions:
      a. Temperature: -67°F to 203°F (-55°C to 95°C)
      b. Humidity: Between 5% to 100% RH (non-condensing)
   2. Operating conditions:
      a. Temperature: -40°F to 158°F (-40°C to 70°C)
      b. Humidity: Between 5% to 100% RH (non-condensing)
   3. Controllers used indoors shall be mounted in a NEMA 1 enclosure at a minimum.
   4. Controllers used outdoors and/or in wet ambient shall be mounted within NEMA 4 type waterproof enclosures, and shall be rated for op^{1}e^{0}ra^{o}t^{f}io^{1}n^{7} at -40° F to 158° F [-40° C to 70° C].

H. Input/Output: The Controller shall have on board or through expansion module all I/O capable of performing all functionality needed for the application. Controls provided by the equipment manufacture must supply the required I/O for the equipment. In addition other controls must meet the following requirements:

1. Shall support flexibility in valve type, the controllers shall be capable of supporting the following valve control types: 0-10VDC, 0-5VDC, 4-20mA, 24VAC - 2 position.
2. Shall support flexibility in sensor type, the Controller shall be capable of reading sensor input ranges of 0 to10V, 0 to 20mA, 50ms or longer pulses, 200 to 20Kohm and RTD input.
3. Shall support flexibility in sensor type, all Analog Outputs shall have the additional capability of being programmed to operate as Universal Inputs or Pulse Width Modulation Outputs.
4. Shall support flexibility in sensor type, the Controller and/or expansion modules shall support dry and wetted (24VAC) binary inputs.
5. The controller shall support pulse accumulator for connecting devices like energy meters.
6. In order to support a wide range of devices, the Controller's binary output shall be able to drive at least 10VA each.
7. Any unused I/O that is not needed for the functionality of the equipment shall be available to be used by custom programs on the Controller and by any other controller on the network.
8. The Controller shall provide 24VAC and 24VDC power terminals sensors and other devices required.
9. The Controller shall provide a dedicated static pressure input.

I. Input/Output Expandability – The Controller shall provide the following functionality in order to meet current and future application needs:
   1. For the application flexibility, the Controller shall be capable of expanding to a total of at least 100 hardware I/O terminations.
   2. Expansion I/O can be mounted up to 650 ft. (200m) from control.
   3. To keep BACnet MS/TP network traffic to a minimum, expansion I/O must communicate via an internal controller communication bus (point expansion via the BACnet MS/TP network is not allowed).

J. Serviceability – The Controller shall provide the following in order to improve serviceability of the Controller.
   1. Diagnostic LEDs for power/normal operation/status, BACnet communications, sensor bus communications, and binary outputs. All wiring connections shall be clearly labeled and made to be field removable.
   2. Binary and analog inputs and outputs shall use removable connectors or be connected to terminal strip external to the control box.
   3. Software service tool connection through the following methods: direct cable connection to the Controller, connection through another controller on BACnet link.
   4. For safety purposes, the controller shall be capable of being powered by a portable computer's USB port for the purposes of configuration, programming and testing programs so that this work can be accomplished with the power off to the associated equipment.
   5. The Controller software tool service port shall utilize standard off-the-shelf USB printer cable.
   6. Capabilities to temporarily override the BACnet point values with built-in time expiration in the Controller.

7. To aid in service replacement, the Controller shall easily attached to standard DIN rail mounting.
8. For future expansion, the Controller shall be capable of adding sequence of operation programming utilizing service tools software with a graphical programming interface (editing or programming in line code is not permissible).
9. To aid in service replacement, the Controller shall allow for setting its BACnet address via controller mounted rotary switches that correspond to the numerical value of the address. (DIP switch methodologies are not allowed). Setting of the address shall be accomplished without the need of a service tool or power applied to the controller.
10. Controller data shall be maintained through a power failure.

K. Software Retention: All Controller operating parameters, setpoints, BIOS, and sequence of operation code must be stored in non-volatile memory in order to maintain such information for months without power.

L. Controller must meet the following Agency Compliance:
1. UL916 PAZX, Open Energy Management Equipment
2. UL94-5V, Flammability
3. FCC Part 15, Subpart B, Class B Limit
4. BACnet Testing Laboratory (BTL) listed as BACnet Advanced Application Controller (B-AAC)

2.9 APPLICATION CONTROLLER for Packaged Rooftop Units

A. The Rooftop Unit (RTU) Application Controller shall be a microprocessor-based DDC controller which, through hardware or firmware design, controls specified equipment. The controller is not user programmable, but is customized for operation within the confines of the equipment it is designed to serve.

B. The Application Controller shall be capable of operating as a stand-alone controller or as a member of a Building Automation System (BAS).

C. When the Application Controller is operating as a member of a Building Automation System (BAS), the application controller shall operate as follows:
1. Application Controller will receive operation mode commands from the BAS network controller. The BAS commands shall include but not be limited to the follow: Occupied Heat/Cool, Unoccupied Heat/Cool, Morning Warm-up, / Pre-cool, Occupied Bypass).
2. Application Controller will provide equipment status parameters to the BAS through BACnet communication.
3. Application Controller will operate as a stand-alone controller in the event of communication failure with the BAS.
4. In case of communications failure stand-alone operation shall use default values or last known values for remote sensors read over the network such as outdoor air temperature.

D. Software

1. To meet the sequence of operation for each zone control, the controller shall use programs developed and tested by the controller manufacturer that are either factory loaded or customized with use of service tool native to the controller.

E. Environment: Controller hardware shall be suitable for the anticipated ambient conditions.
1. Storage: -55° to 203° F (-48° to 95° C) and 5 to 95% Rh, non-condensing.
2. Operating: -40° to 158° F (-40 to 70° C) and 5 to 95% Rh, non-condensing.
3. Controllers used indoors shall be mounted in a NEMA 1 enclosure at a minimum.
4. Controllers used outdoors and/or in wet ambient shall be mounted within NEMA 4 type waterproof enclosures, and shall be rated for operation at -40° to 158° F [-40° to 70° C].

F. Controller Input/Output: The controller shall have on board capable of performing all functionality needed for the application. Controls provided by the equipment manufacture must supply the required I/O for the equipment.
1. For flexibility in selection and replacement of valves, the controllers shall be capable of supporting all of the following output types; 0-10VDC, 0-5VDC, 4-20mA, Binary.
2. For flexibility in selection and replacement of sensors, the controllers shall be capable of reading sensor input ranges of 0 to10V, 0 to 20mA, Pulse counts, and 200 to 20Kohm.

G. Serviceability – The controller shall provide the following in order to improve serviceability of the controller.
1. Diagnostic LEDs shall indicate correct operation or failures/faults for all of the following: power, sensors, BACnet communications, and I/O communications bus.
2. All binary output shall have LED's indicating the output state.
3. All wiring connectors shall removable without the use of a tool.
4. Software service tool connection through the following methods: direct cable connection to the controller, connection through another controller on BACnet link.

H. Software Retention: All Zone Controller operating parameters, setpoints, BIOS, and sequence of operation code must be stored in non-volatile memory in order to maintain such information for months without power.

I. Controller shall meet the following Agency Compliance:
1. UL916 PAZX, Open Energy Management Equipment
2. UL94-5V, Flammability
3. FCC Part 15, Subpart B, Class B Limit
4. BACnet Testing Laboratory (BTL) listed

2.10 INPUT/OUTPUT INTERFACE:

A. Hardwired inputs and outputs may tie into the system through building, custom application, or ASCs.

B. All input points and output points shall be protected such that shorting of the point to itself, to another point, or to ground will cause no damage to the controller. All input and output points

shall be protected from voltage up to 24V of any duration, such that contact with this voltage will cause no damage to the controller.

C. Binary inputs shall allow the monitoring of on/off signals from remote devices. The binary inputs shall provide a wetting current of at least 12 mA to be compatible with commonly available control devices and shall be protected against the effects of contact bounce and noise. Binary inputs shall sense “dry contact” closure without external power (other than that provided by the controller) being applied.

D. Pulse accumulation input objects. This type of object shall conform to all the requirements of binary input objects and also accept up to 10 pulses per second for pulse accumulation.

E. Analog inputs shall allow the monitoring of low voltage (0 to 10 VDC), current (4 to 20 mA), or resistance signals (thermistor, RTD). Analog inputs shall be compatible with and field configurable to commonly available sensing devices.

F. Binary outputs shall provide for on/off operation or a pulsed low-voltage signal for pulse width modulation control. Binary outputs on building and custom application controllers shall have status lights. Outputs shall be selectable for either normally open or normally closed operation.

G. Analog outputs shall provide a modulating signal for the control of end devices. Outputs shall provide either a 0 to 10VDC or a 4 to 20 mA signal as required to provide proper control of the output device. Analog outputs shall not exhibit a drift of greater than 0.4% of range per year.

H. Tri-State Outputs. Provide tri-state outputs (two coordinated binary outputs) for control of three-point floating type electronic actuators without feedback. Use of three-point floating devices shall be limited to zone control and terminal unit control applications (VAV terminal units, duct-mounted heating coils, zone dampers, radiation, etc.). Control algorithms shall run the zone actuator to one end of its stroke once every 24 hours for verification of operator tracking.

I. System Object Capacity. The system size shall be expandable to at least twice the number of input/ output objects required for this project. Additional controllers (along with associated devices and wiring) shall be all that is necessary to achieve this capacity requirement. The operator interfaces installed for this project shall not require any hardware additions or software revisions in order to expand the system.

2.11 POWER SUPPLIES:

A. Control transformers shall be UL listed. Furnish Class 2 current-limiting type or furnish overcurrent protection in both primary and secondary circuits for Class 2 service in accordance with NEC requirements. Limit connected loads to 80% of rated capacity.

1. DC power supply output shall match output current and voltage requirements. Unit shall be full-wave rectifier type with output ripple of 5.0 mV maximum peak-to-peak. Regulation shall be 1.0% line and load combined, with 100-microsecond response time for 50% load changes. Unit shall have built-in overvoltage and overcurrent protection and

shall be able to withstand a 150% current overload for at least three seconds without trip-out or failure.

a. Unit shall operate between 0°C and 50°C (32°F and 120°F). EM/RF shall meet FCC Class B and VDE 0871 for Class B and MIL-STD 810C for shock and vibration.
b. Line voltage units shall be UL recognized and CSA approved.

2.12 AUXILLARY CONTROL DEVICES:

A. Motorized dampers, unless otherwise specified elsewhere, shall be as follows:
1. Damper frames shall be 16 gauge galvanized sheet metal or 1/8" extruded aluminum with reinforced corner bracing.
2. Damper blades shall not exceed 8" in width or 48" in length. Blades are to be suitable for medium velocity performance (2,000 fpm). Blades shall be not less than 16 gauge.
3. Damper shaft bearings shall be as recommended by manufacturer for application.
4. All blade edges and top and bottom of the frame shall be provided with compressible seals. Side seals shall be compressible stainless steel. The blade seals shall provide for a maximum leakage rate of 10 CFM per square foot at 2.5" w.c. differential pressure.
5. All leakage testing and pressure ratings will be based on AMCA Publication 500.
6. Individual damper sections shall not be larger than 48" x 60". Provide a minimum of one damper actuator per section.

B. Control dampers shall be parallel or opposed blade types as scheduled on drawings

C. Electric damper/valve actuators
1. The actuator shall have electronic overload or digital rotation sensing circuitry to prevent damage to the actuator throughout the rotation of the actuator.
2. Where shown, for power-failure/safety applications, an internal mechanical, spring return mechanism shall be built into the actuator housing.
3. All rotary spring return actuators shall be capable of both clockwise or counter clockwise spring return operation. Linear actuators shall spring return to the retracted position.
4. Proportional actuators shall accept a 0-10 VDC or 0-20 ma control signal and provide a 2-10 VDC or 4-20 ma operating range.
5. All non-spring return actuators shall have an external manual gear release to allow manual positioning of the damper when the actuator is not powered. Spring return actuators with more than 60 in-lb. torque capacity shall have a manual crank for this purpose.
6. Actuators shall be provided with a conduit fitting and a minimum 1m electrical cable and shall be pre-wired to eliminate the necessity of opening the actuator housing to make electrical connections.
7. Actuators shall be Underwriters Laboratories Standard 873 listed.
8. Actuators shall be designed for a minimum of 60,000 full stroke cycles at the actuator's rated torque.

D. Control Valves

1. Control valves shall be two-way or three-way type for two-position or modulating service as scheduled or shown.
2. Close-off (differential) Pressure Rating: Valve actuator and trim shall be furnished to provide the following minimum close-off pressure ratings:
    a. Water Valves:
        1) Two-way: 150% of total system (pump) head.
        2) Three-way: 300% of pressure differential between ports A and B at design flow or 100% of total system (pump) head.
    b. Steam Valves: 150% of operating (inlet) pressure.

E. Water Valves
1. Body and trim style and materials shall be in accordance with manufacturer's recommendations for design conditions and service shown, with equal percentage ports for modulating service.
2. Sizing Criteria:
    a. Two-position service: Line size.
    b. Two-way modulating service: Pressure drop shall be equal to twice the pressure drop through heat exchanger (load), 50% of the pressure difference between supply and return mains, or 34.5 kPa (5 psi), whichever is greater.
    c. Three-way modulating service: Pressure drop equal to twice the pressure drop through the coil exchanger (load), 34.5 kPa (5 psi) maximum.
    d. Valves DN 15 (1/2 in.) through DN 50 (2 in.) shall be bronze body or cast brass ANSI Class 250, spring-loaded, PTFE packing, quick opening for two-position service. Two-way valves to have replaceable composition disc or stainless steel ball.
    e. Valves DN 65 (2 1/2 in.) and larger shall be cast iron ANSI Class 125 with guided plug and PTFE packing.
3. Water valves shall fail normally open or closed, as scheduled on plans, or as follows:
    a. Water zone valves—normally open preferred
    b. Heating coils in air handlers - normally open
    c. Chilled-water control valves - normally closed
    d. Other applications—as scheduled or as required by sequences of operation
4. Zone valves shall be sized to meet the control application and they shall maintain their last position in the event of a power failure.

F. Steam Valves
1. Body and trim materials shall be in accordance with manufacturer's recommendations for design conditions and service with linear ports for modulating service.
2. Sizing Criteria:
    a. Two-position service: pressure drop 10% to 20% of inlet psig
    b. Modulating service: 100 kPa (15 psig) or less; pressure drop 80% of inlet psig
    c. Modulating service: 101 to 350 kPa (16 to 50 psig); pressure drop 50% of inlet psig
    d. Modulating service: over 350 kPa (50 psig); pressure drop as scheduled on plans

G. Binary Temperature Devices
1. Low-voltage space thermostat shall be 24 V, bimetal-operated, mercury-switch type, with either adjustable or fixed anticipation heater, concealed setpoint adjustment, 13°C to

30°C (55°F to 85°F) setpoint range, 1°C (2°F) maximum differential, and vented ABS plastic cover.

2. Line-voltage space thermostat shall be bimetal-actuated, open contact type, or bellows-actuated, enclosed, snap-switch type or equivalent solid-state type, with heat anticipator, UL listed for electrical rating, concealed setpoint adjustment, 13°C to 30°C (55°F to 85°F) setpoint range, 1°C (2°F) maximum differential, and vented ABS plastic cover.
3. Low-limit thermostats. Low-limit airstream thermostats shall be UL listed, vapor pressure type, with an element of 6 m (20 ft) minimum length. Element shall respond to the lowest temperature sensed by any 30 cm (1 ft) section. The low-limit thermostat shall be manual reset only.

H. Wired Temperature Sensors
1. Temperature sensors shall be RTD or thermistor.
2. Duct sensors shall be single point or averaging as shown. Averaging sensors shall be a minimum of 1.5 m (5 ft) in length per 1 m2 (10 ft2) of duct cross section.
3. Immersion sensors shall be provided with a separable stainless steel well. Pressure rating of well is to be consistent with the system pressure in which it is to be installed. The well must withstand the flow velocities in the pipe.
4. Space sensors shall be equipped with setpoint adjustment, override switch, display, and/or communication port as shown on plans.
5. Provide matched temperature sensors for differential temperature measurement.

I. Wired Humidity Sensors
1. Duct and room sensors shall have a sensing range of 20% to 80%.
2. Duct sensors shall be provided with a sampling chamber.

J. Static Pressure Sensors
1. Sensor shall have linear output signal. Zero and span shall be field-adjustable.
2. Sensor sensing elements shall withstand continuous operating conditions plus or minus 50% greater than calibrated span without damage.
3. Water pressure sensor shall have stainless steel diaphragm construction, proof pressure of 150 psi minimum. Sensor shall be complete with 4-20 ma output, required mounting brackets, and block and bleed valves. Mount in location accessible for service.
4. Water differential pressure sensor shall have stainless steel diaphragm construction, proof pressure of 150 psi minimum. Over-range limit (DP) and maximum static pressure shall be 3,000 psi. Transmitter shall be complete with 4-20 ma output, required mounting brackets, and five-valve manifold. Mount in a location accessible for service.

K. Low Limit Thermostats
1. Safety low limit thermostats shall be vapor pressure type with an element 6m [20 ft] minimum length. Element shall respond to the lowest temperature sensed by any one foot section.
2. Low limit shall be manual reset only.

2.13 WIRING AND RACEWAYS:

A. General: Provide copper wiring, plenum cable, and raceways as specified in the applicable sections of this specification.

B. All insulated wire to be copper conductors, UL labeled for 90°C (194°F) minimum service.

C. Fiber Optic Cable. Optical cables shall be duplex 900 mm tight-buffer construction designed for intra-building environments. The sheath shall be UL Listed OFNP in accordance with NEC Article 770. The optical fiber shall meet the requirements of FDDI, ANSI X3T9.5 PMD for 62.5/125 µm.

PART 3 - EXECUTION

3.0 SECTION INCLUDES

3.1 EXAMININATION:

3.2 PROTECTION:

3.3 COORDINATION:

3.4 GENERAL WORKMANSHIP:

3.5 FIELD QUALITY CONTROL:

3.6 COMMUNICATION WIRING:

3.7 FIBER OPTIC CABLE:

3.8 INSTALLATION OF SENSORS:

3.9 FLOW SWITCH INSTALLATION

3.10 WARNING LABELS:

3.11 IDENTIFICATION OF HARDWARE AND WIRING:

3.12 CONTROLLERS:

3.13 PROGRAMMING:

3.14 ONTROL SYSTEM CHECKOUT AND TESTING:

3.15 CLEANING:

3.16 TRAINING:

3.1 EXAMINATION:

A. The Contract Documents shall be thoroughly examined for coordination of control devices, their installation, wiring, and commissioning. Coordinate and review mechanical equipment specifications, locations, and identify any discrepancies, conflicts, or omissions that shall be reported to the Architect/Engineer for resolution before rough-in work is started.

B. The BAS manufacturer shall inspect the jobsite in order to verify that control equipment can be installed as required, and any discrepancies, conflicts, or omissions shall be reported to the Architect/Engineer for resolution before rough-in work is started.

3.2 PROTECTION:

A. The BAS installation contractor shall protect all work and material from damage by their work or personnel, and shall be liable for all damage thus caused.

B. The BAS manufacturer shall be responsible for their work and equipment until final inspection, testing, and acceptance. The BAS installing contractor shall protect their work against theft or damage, and shall carefully store material and equipment received on site that is not immediately installed. The Contractor shall close all open ends of work with temporary covers or plugs during storage and construction to prevent entry of foreign objects.

3.3 COORDINATION:

A. Site
   1. Where the mechanical work will be installed in close proximity to, or will interfere with, work of other trades, the contractor shall assist in working out space conditions to make a satisfactory adjustment. If the contractor installs his/her work before coordinating with other trades, so as to cause any interference with work of other trades, the contractor shall make the necessary changes in his/her work to correct the condition without extra charge.
   2. Coordinate and schedule work with all other work in the same area, or with work that is dependent upon other work, to facilitate mutual progress.

B. Submittals. Refer to the “Submittals,” section of this specification for requirements.

C. Test and Balance

1. The contractor shall furnish a single set of all tools necessary to interface to the control system for test and balance purposes.
2. The contractor shall provide training in the use of these tools. This training will be planned for a duration of 4 hours.
3. In addition, the contractor shall provide a qualified technician to assist in the test and balance process, until the first 20 terminal units are balanced.
4. The tools used during the test and balance process shall be returned to the contractor at the completion of the testing and balancing.

D. Life Safety
1. Duct smoke detectors required for air handler shutdown shall be supplied under Section 26100 of this specification. The contractor shall interlock smoke detectors to air handlers for shutdown as described in the Sequences of Operation for this project.
2. Smoke dampers and actuators required for duct smoke isolation are provided under Section 26100. The contractor shall interlock these dampers to the air handlers as described in the Sequences of Operation for this project as applicable.
3. Fire/smoke dampers and actuators required for fire rated walls are provided under another Section 26100. Control of these dampers shall be by 26100

E. Coordination with Controls Specified in Other Sections or Divisions. Other sections and/or divisions of this specification include controls and control devices that are to be part of or interfaced to the control system specified in this section. These controls shall be integrated into the system and coordinated by the contractor as follows:
1. All communication media and equipment shall be provided as specified in the "Communication" section of this specification.
2. Each supplier of a controls product is responsible for the configuration, programming, start-up, and testing of that product to meet the sequences of operation described in this section.
3. The Contractor shall coordinate and resolve any incompatibility issues that arise between the control products provided under this section and those provided under other sections or divisions of this specification.

3.4 GENERAL WORKMANSHIP:

A. Install equipment, piping, wiring/conduit, parallel to building lines (i.e. horizontal, vertical, and parallel to walls) wherever possible.

B. Provide sufficient slack and flexible connections to allow for vibration of piping and equipment.

C. Install all equipment in readily accessible locations as defined by National Electric Code (NEC). Control panels shall be attached to structural walls or properly supported in a free-standing configuration, unless mounted in equipment enclosure specifically designed for that purpose. Panels shall be mounted to allow for unobstructed access for service.

D. Verify integrity of all control wiring to ensure continuity and freedom from shorts and grounds prior to commencing the startup and commissioning procedures.

E. All control device installation and wiring shall comply with Contract Documents, acceptable industry specifications, and industry standards for performance, reliability, and compatibility. Installation and wiring shall be executed in strict adherence to local codes and standard practices referenced in Contract Documents.

3.5 FIELD QUALITY CONTROL:

A. All work, materials, and equipment shall comply with the rules and regulations of applicable local, state, and federal codes and ordinances as identified in Contract Documents.

B. BAS manufacturer shall continually monitor the field installation for building code compliance and quality of workmanship. All visible piping and or wiring runs shall be installed parallel to building lines and properly supported.

C. BAS installing Contractor(s) shall arrange for field inspections by local and/or state authorities having jurisdiction over the work.

3.6 COMMUNICATION WIRING:

A. All cabling shall be installed in a neat and workmanlike manner. Follow manufacturer's installation recommendations for all communication cabling.

B. Do not install communication wiring in raceway and enclosures containing Class 1 or other Class 2 wiring.

C. Maximum pulling, tension, and bend radius for cable installation, as specified by the cable manufacturer shall not be exceeded during installation.

D. Contractor shall verify the integrity of the entire network following cable installation. Use appropriate test measures for each particular cable.

E. When a cable enters or exits a building, a lighting arrestor must be installed between the line and ground.

F. All runs of communication wiring shall be unspliced length when the length is commercially available.

G. All communication wiring shall be labeled to indicate origin and destination.

3.7 FIBER OPTIC CABLE:

A. All cabling shall be installed in a neat and workmanlike manner. Minimum cable and unjacketed fiber bend radii as specified by cable manufacturer shall be maintained.

B. Maximum pulling tensions as specified by the cable manufacturer shall not be exceeded during installation. Post installation residual cable tension shall be within cable manufacturer's specifications.

C. Fiber optic cabinets, hardware, and cable entering the cabinet shall be installed in accordance with manufacturers' instructions. Minimum cable and unjacketed fiber bend radii as specified by cable manufacturer shall be maintained.

3.8 INSTALLATION OF SENSORS:

A. Sensors required for mechanical equipment operation shall be factory installed and wired as specified in mechanical equipment specifications. BAS manufacturer shall be responsible for coordinating these control devices and ensuring the sequence of operations will be met. Installation and wiring shall be in accordance with the BAS manufacturer's recommendations.

B. Sensors that require field mounting shall meet the BAS manufacturer’s recommendations and be coordinated with the mechanical equipment they will be associated.

C. Mount sensors rigidly and adequately for the environment the sensor will operate.

D. Room temperature sensors shall be installed on concealed junction boxes properly supported by the block wall framing. For installation in dry wall ceilings, the low voltage sensor wiring can be installed exposed and must meet applicable National and Local Electrical Codes.

E. All wires attached to wall mounted sensors shall be sealed off to prevent air from transmitting in the associated conduit and affecting the room sensor readings.

F. Install duct static pressure tap with tube end facing directly down-stream of air flow.

G. Install space static pressure sensor with static sensing probe applicable for space installation where applicable.

H. Sensors used in mixing plenums, and hot and cold decks shall be of the averaging type. Averaging sensors shall be installed in a serpentine manner horizontally across duct. Each bend shall be supported with a capillary clip.

I. All pipe mounted temperature sensors shall be installed in matched thermowells. Install all liquid temperature sensors with heat conducting fluid in thermal wells for adequate thermal conductance.

J. Wiring for space sensors shall be concealed in building drywall. EMT conduit is acceptable within mechanical equipment and service rooms.

K. Install outdoor air temperature sensors on north wall complete with sun shield at manufacturer’s recommended location and coordinated with Engineer.

3.9 FLOW SWITCH INSTALLATION:

A. Coordinate installation of flow switch with Mechanical Contractor who will be responsible for installing a thread o let in steel piping applications. Copper pipe applications will require the use CxCxF Tee, and no pipe extensions or substitutions will be allowed.

B. Mount a minimum of 5 pipe diameters upstream and 5 pipe diameters downstream, or two feet, whichever is greater, from pipe fittings and other inline potential obstructions.

C. Install in accordance with manufacturers' instructions, which will require proper flow direction, horizontal alignment with flow switch mounting on the top of pipe.

3.10 WARNING LABELS:

A. Permanent warning labels shall be affixed to all equipment that can be automatically started by the BAS system.

B. Permanent warning labels shall be affixed to all motor starters and all control panels that are connected to multiple power sources utilizing separate disconnects.

3.11 IDENTIFICATION OF HARDWARE AND WIRING:

A. All field wiring and cabling, including that within factory mounted, and wired control panels and devices for mechanical equipment, shall be labeled at each end within 2" of termination with a cable identifier and other descriptive information for troubleshooting, maintenance, and service purposes. BAS manufacturer to coordinate this labeling requirement with mechanical equipment manufacturer as it relates to controls.

B. Permanently label or code each point of field terminal strips to show the instrument or item served and correlate them to the BAS design drawings.

C. Identify control panels with minimum 1-cm letters on laminated plastic nameplates.

D. Identifiers shall match record documents. All plug-in components shall be labeled such that removal of the component does not remove the label.

3.12 CONTROLLERS:

A. Provide a separate DDC Controller for individual HVAC mechanical equipment. BAS manufacturer shall furnish and coordinate DDC controllers and control devices and ensure that installation and wiring adhere to BAS manufacturer’s design recommendations. For those mechanical equipment units that do not have factory installed controls specified, the BAS manufacturer shall field mount controls and coordinate all installation and termination information to ensure the specified sequence of operations are met.

B. Building Controllers and Custom Application Controllers shall be selected to provide a minimum of 15% spare I/O point capacity for each point type (analog or digital) found at each location. If input points are not universal, 15% of each type is required. If outputs are not universal, 15% of each type is required. A minimum of one spare is required for each type of point used in each controller.
   1. Future use of spare I/O point capacity shall require providing the field instrument and control device, field wiring, engineering, programming, and commissioning. No additional Controller boards or point modules shall be required to implement use of these spare points.

3.13 PROGRAMMING:

A. Provide sufficient internal memory for all controllers to ensure specified sequence of operations, alarming, trending, and reporting requirements are achieved. BAS manufacturer shall provide a minimum of 25% spare memory capacity for future use.

B. Point Naming: System point names shall be modular in design, allowing easy operator interface without the use of a written point index.

C. Software Programming
   1. Provide programming for individual mechanical systems to achieve all aspects of the sequence of operation specified. It is the BAS manufacturer's responsibility to ensure all mechanical equipment functions and operates as specified in sequence of operations. Provide sufficient programing comments in controller application software to clearly describe each section of the program.

D. BAS Operator's Interface
   1. When Operator Workstation is specified, provide color graphics for each piece of mechanical equipment depicting sufficient I/O to monitor and troubleshoot operation. Operator color graphics shall include Chiller Plant, Cooling Tower System, Boiler Plant, Air Handling Units, Rooftop Units, VAV Terminal Boxes, Fan Coil Units, Unit Ventilators, Heat Exchangers, Exhaust Fans, etc. These standard graphics shall depict all points dynamically as specified in the points list and/or indicated in sequence of operation.
   2. The BAS manufacturer shall provide all the labor necessary to install, initialize, start up, and trouble-shoot all operator interface software and their functions as described in this section. This includes any operating system software, the operator interface data base, and any third party software installation and integration required for successful operation of the operator interface.
   3. As part of this execution phase, the BAS manufacturer shall perform a complete test of the operator interface.

3.14 CONTROL SYSTEM CHECKOUT AND TESTING:

A. Start-up testing. All testing in this section shall be performed by the contractor and shall make up part of the necessary verification of an operating control system. This testing shall be completed before the owner's representative is notified of the system demonstration.
   1. The contractor shall furnish all labor and test apparatus required to calibrate and prepare for service all of the instruments, controls, and accessory equipment furnished under this specification.
   2. Verify that all control wiring is properly connected and free of all shorts and ground faults. Verify that terminations are tight.
   3. Enable the control systems and verify calibration of all input devices individually. Perform calibration procedures according to manufacturer's recommendations.
   4. Verify all binary output devices (relays, solenoid valves, two-position actuators and control valves, magnetic starter, etc.) operate properly and normal positions are correct.
   5. Verify all analog output devices (I/Ps, actuators, etc.) are functional, that standard span are correct, and that direction and normal positions are correct. The contractor shall check all control valves and automatic dampers to ensure proper action and closure. The contractor shall make any necessary adjustments to valve stem and damper blade travel.
   6. Verify the system operation adheres to the sequences of operation. Simulate and observe all modes of operation by overriding and varying inputs and schedules. Tune all DDC loops and optimal start/stop routines.
   7. Alarms and Interlocks
      a. Check each alarm separately by including an appropriate signal at a value that will trip the alarm.
      b. Interlocks shall be tripped using field contacts to check the logic, as well as to ensure that the fail-safe condition for all actuators is in the proper direction.
      c. Interlock actions shall be tested by simulating alarm conditions to check the initiating value of the variable and interlock action.

3.15 CLEANING:

A. The BAS manufacturer's installing contractor(s) shall clean up all debris resulting from their installation activities on a daily basis. The installation contractors shall remove all cartons, containers, crates, etc. under his control as soon as their contents have been removed. Waste shall be collected and placed in a location designated by the Owner, Construction Manager, General Contractor, and/or Mechanical Contractor.

B. At the completion of work in any area, the installation contractor shall clean all of their work, equipment, etc., making it free from dust, dirt and debris.

C. At the completion of work, all equipment furnished under this Section shall be checked for paint damage. Any factory finished paint that has been damaged shall be repaired to match the adjacent areas. Any metal cabinet or enclosure that has been deformed shall be replaced with new material and repainted to match the adjacent areas.

3.16 TRAINING:

A. Provide minimum of (4) hours of operator training throughout the contract period. The training will be provided for personnel designated by the Owner.

B. These objectives will be divided into logical groupings; participants may attend one or more of these, depending on level of knowledge required:
   1. Day-to-day BAS Operators
   2. BAS Troubleshooting & Maintenance

END OF SECTION 230900

SECTION 230993

SEQUENCE OF OPERATIONS FOR HVAC CONTROLS

PART 1 - GENERAL

1.01 SUMMARY

A. This section includes control sequences for HVAC equipment.

B. Provide labor, materials, tools, machinery, equipment, and services necessary to satisfy the sequence of operations specified herein. Coordinate the work with other trades to ensure complete operations of the controls system.

C. Comply with ASHRAE Standards 90.1 and 62.1 as referenced by the Current Code, as well as applicable requirements of the Building Code and other relevant codes.

D. Control sequences shall conform to the requirements of ASHARE Guideline 36-2021 – High Performance Sequences of Operation for HVAC systems.

PART 2 – PRODUCTS (NOT APPLICABLE)

PART 3 – SEQUENCE OF OPERATION

3.01 GENERAL

A. For each system listed provide direct digital control to satisfy the sequence of operation as stated in this section.

B. In addition to the requirements of this section, comply with ASHRAE Guideline 36. Provide devices that are pre-programmed with Guideline 36 sequences where available including the following:
1. VAV air handling systems and terminal units.
2. Heating hot water plants.
3. Chilled water plants.
4. Fan coil units.

C. Power Fail/Auto Restart

1. Upon the restoration of power following a power loss, the energy management control system (EMS) shall analyze the status of all controlled equipment, compare it with normal programmed scheduling and turn equipment on or off as necessary to resume normal operations.
2. The EMS shall provide an orderly, staggered and predefined scheduling of return-to-normal operation of controlled equipment. The order in which equipment (or groups of equipment) is started, along with the time delay between starts, shall be user definable.

D. Fire Alarm Shut Down: In an alarm condition, the Fire Alarm system shall shut down fans through direct interlock. The EMS shall not shut down the fans. The

EMS contractor shall ensure that dampers and valves position to their fail-safe positions.

E. All suggested setpoints and settings shall be adjustable.

F. Provide lockable, tamper-proof, clear plastic protective guards on all room temperature sensors and thermostats located in public spaces (vestibules, corridors, locker rooms, auditoriums, kitchens, cafeterias, etc.). Provide temperature sensors installed under flush mounted protective plates in bathrooms. Provide metal protective guards on all room temperature sensors and thermostats located in gymnasiums, mechanical equipment rooms, shipping and receiving areas, etc. (except for wireless sensors which shall use impact-resistant plastic guards).

G. For all analog measurements provide high and low limit and fault alarm indication. For all fans, pumps, etc., provide status alarm indication.

H. Provide indication of system modes: i.e., Occupied, Unoccupied, Warmup, Cooldown, Pre-Occupancy Purge, Post Occupancy Flush, etc. Differentiate as appropriate for all systems controlled or interfaced to.

I. All analog, binary and time variables and point information and adjustments shall be accessible via the OWS, web browser, etc.

J. All adjustment and acknowledgment permissions shall be password-level dependent.

K. Wherever variable speed operation for a motor is specified or required to satisfy the sequence of operations, provide motors and controls capable of variable speed operation. Provide electronically commutated motors (ECM) where available or when ECMs are not an option due to lack of availability of motor size, provide NEMA premium, inverter duty motors with variable frequency drives.

L. Replace existing controls, thermostats, actuators, etc., with new devices as necessary for incorporation into the new EMS control system.

3.02 HOT WATER HEATING SYSTEM

A. SYSTEM GENERAL DESCRIPTION:

The heating plant system controller provides stand-alone control or control from an optional higher level building automation system (bas) . The heating plant control system shall monitor and control the system's boiler(s), pump(s), and control valves as shown on the heating plant flow diagram, in the heating plant points list and as detailed in the sequence of operation listed below.

The heating plant system consists of hot water boiler(s) with its piping configuration arranged as a constant flow loop supplying hot water to the facility.

The hot water distribution pump(s) are piped in series with the boiler and are dedicated to supplying hot water flow through its respective boiler. The factory boiler system

controller shall provide stand-alone control or bas workstation control of the supply heating water temperature setpoint (adj.).

B. HEATING SYSTEM ENABLE/DISABLE:

The heating system shall be enabled/disabled by the heating plant controller as requested by the building automation system (bas) human-interface panel or the bas time of day schedule. When enabled, the system shall enable the boiler and the associated boiler pump.

C. HOT WATER RESET:

The hot water supply temperature setpoint shall be linearly reset from 120.0 deg. F (adj.) To 180.0 deg. F (adj.) As the outside air temperature falls from 60.0 deg. F (adj.) To 0.0 deg. F (adj.)

D. BOILER CONTROL:

If the hot water distribution system supply temperature falls more than 25.0 deg. F (adj.) Below setpoint for a period longer than 15 minutes (adj.), or if the boiler signals a failure alarm, the system controller shall signal an alarm.

E. HOT WATER DISTRIBUTION PUMP START/STOP:

The system shall start a hot water pump through a contact closure of the pump's motor starter enable contacts.

F. HOT WATER DISTRIBUTION PUMP STATUS:

The system shall detect hot water pump run status by a current switch.

G. FREEZE PROTECTION:

When the outdoor air temperature falls below 35.0 deg. F (adj.), the hot water distribution pump shall operate continuously to provide hot water circulation to all associated hot water coils. If the hot water supply temperature falls below 130.0 deg. F (adj.) During unoccupied periods, the boiler sequence shall be enabled to safeguard against low water temperature and boiler condensation.

In the event that a hydronic airside type equipment initiates a low limit alarm, the heating system shall enable, if disabled, and provide heating medium circulation to the equipment.

H. BOILER EMERGENCY SHUTDOWN SWITCH:

If the boiler emergency shutdown switch has been activated, the boilers are to shut down immediately and an alarm shall be signaled to the heating system controller or bas workstation.

3.03 PACKAGED RTU

A. ECONOMIZER:

The outdoor air temperature shall be less than 80 deg. F (adj.). The conditions for cooling mode shall be met. The dehumidification mode and the energy recovery wheel shall be disabled and the bypass dampers shall open to 100%.

OPERATION: when the economizer mode is enabled and the outdoor air temperature is 5 deg. F (adj.) Below the discharge setpoint, the free cooling mode shall be enabled. The outdoor air damper shall modulate to maintain the active discharge air temperature setpoint measured by the supply air sensor. During the free cooling mode the mechanical cooling and heat shall be disabled.

B. DOAS BUILDING AUTOMATION SYSTEM INTERFACE:

The building automation system (bas) shall send the controller occupied bypass, morning warm-up/pre-cool, occupied/unoccupied and heat/cool modes. The bas shall also send the discharge air temperature setpoint and the duct static pressure setpoint. If a bas is not present, or communication is lost with the bas the controller shall operate using default modes and setpoints.

C. DOAS OCCUPIED:

The unit controller shall control the supply fan speed to maintain a constant volume (adj.). The unit controller shall control the supply fan speed to maintain the current supply duct static pressure setpoint (adj.).

D. DOAS UNOCCUPIED:

Space conditions shall be communicated via bas or a hardwire space/temperature humidity sensor. Space conditions shall be communicated via bas or a hardwire space/temperature humidity sensor. The outdoor air damper shall be commanded to close, and the return air damper shall open. If the unit is under economizer conditions, the outdoor air damper position command shall open to the outdoor air damper maximum position setpoint. Unoccupied heating mode shall be enabled when the space temperature falls below the unoccupied heating enable setpoint. During unoccupied heating mode the unit shall run the heat to maintain 90°f for the discharge air temperature. Unoccupied heating mode shall be disabled when the space temperature rises 2 deg. F above the unoccupied heating setpoint. When there is no call for unoccupied heating mode or unoccupied dehumid mode, unoccupied cooling mode shall be enabled when the space temperature rises above the unoccupied cooling enable setpoint. During unoccupied cooling mode the unit shall run the cooling to maintain 50 deg. F for the discharge air temperature. Unoccupied cooling mode shall be disabled when the space temperature rises 2 deg. F above the unoccupied cooling enable setpoint.

E. DOAS MORNING WARM-UP MODE:

When morning warm-up is initiated the unit shall enable the heating and fan(s). When the space temperature reaches the occupied heating setpoint (adj.), the unit shall transition to the occupied mode.

F. DOAS PRE-COOL MODE:

During optimal start, if the space temperature is above the occupied cooling setpoint, pre-cool mode shall be activated. During optimal start, if the average space temperature is above the occupied cooling setpoint, pre-cool mode shall be activated.

G. DOAS OCCUPIED BYPASS:

The bas shall monitor the status of the on and cancel buttons of the space temperature sensors. When an occupied bypass request is received from a space sensor, the unit shall transition from its current occupancy mode to occupied bypass mode and the unit shall maintain the space temperature to the occupied setpoints (adj.).

H. DOAS HEAT/COOL MODE:

COOLING: the unit controller shall use the discharge air temperature sensor and discharge air temperature cooling setpoint to determine when to initiate requests for cooling. Discharge air setpoint shall be maintained by controlling the cooling as required.

HEATING: the unit controller shall use the discharge air temperature sensor and discharge air temperature heating setpoint to determine when to initiate requests for heating. Discharge air setpoint shall be maintained by controlling the heating as required. During unoccupied heating or morning warm-up mode, the unit heat request shall be communicated to the system vavs prior to commencing heating operation to allow vav units to open. The variable speed drive shall be commanded to 100% and the heat shall be staged on and off to satisfy the zone temperature setpoint.

I. DOAS COOLING:

Cooling mode shall be enabled whenever the outdoor air temperature rises above the outdoor air cooling enable setpoint. The outdoor air temperature shall be above the outdoor air heating enable setpoint. During cooling mode, cooling capacity shall be adjusted to maintain discharge air temperature setpoint. When the outdoor air temperature is above the outdoor air heating enable, but below the outdoor air cooling enable setpoint, cooling mode shall be enabled when the space temperature is above the space temperature setpoint plus the space temperature offset. Dehumidification mode shall take priority over cooling mode. On units without head pressure control, the compressors shall be locked out if the outdoor air temperature falls below the compressor low ambient lockout setpoint and there is a demand for cooling. When this occurs, the unit shall display compressor low ambient lockout active as an informational diagnostic. Circuit 1 refrigeration pressure shall be monitored, and cooling capacity shall be limited to prevent the indoor coil from freezing. If the unit has digital scroll on the second circuit, then both circuits shall be monitored.

J. DOAS HEAT PUMP HEATING:

Heat pump heating shall be enabled using the same criteria as primary heating mode, except that heat pump is attempted first before using the primary heater. The same setpoints are used to adjust compressor heating capacity. During heat pump operation the hot gas heating shall be at 100%. When the unit switches from heat pump to primary

heating, auxiliary heating mode shall be allowed. Auxiliary heating mode shall be enabled for a minimum of fifteen minutes. If the compressor heating capacity is at 100%, and discharge air temperature falls 3 deg. F below the discharge air temperature setpoint for ten minutes, the unit shall toggle the auxiliary heating mode to be allowed, outdoor air temperature shall recorded as heat pump fail switch point. Heat pump operation shall be re-attempted when the temperature rises by 5 deg. F. The unit shall switch the auxiliary heating mode to be allowed when the outdoor air temperature falls below the heat pump disable temperature setpoint 25 deg. F (adj. 0-60 deg. F). Defrosting of the outdoor coil shall occur when the outdoor air temperature is below 52 deg. F and the outdoor coil refrigerant temperature is below 35 deg. F. The unit controller shall monitor the condenser conditions, and defrost mode shall be enabled once there is frost accumulation. During defrost mode the reversing valve(s) shall be switched into the cooling position and the condenser fans shall be shut off. The primary heat shall be enabled on for units with gas.

K. DOAS PRIMARY HEATING:

Heating mode shall be enabled whenever the outdoor air temperature is below the outdoor air heating enable setpoint. During heating mode, heat capacity shall be adjusted to maintain the discharge air temperature to discharge air temperature setpoint. The unit controller shall monitor the status of the heater using heat on off status local. In the event of ignition failure, the unit shall make three ignition attempts before displaying diagnostic: heat failure. The unit shall shut down when a heat failure occurs and shall a reset four hours later to re-attempt ignition.

L. DOAS DEHUMIDIFICATION:

Dehumidification mode shall be enabled whenever the outdoor air dewpoint rises above the outdoor air dewpoint enable setpoint. The outdoor air temperature active must be above outdoor air heating enable setpoint. During dehumidification mode, cooling capacity shall be adjusted to maintain the dehumidification temperature setpoint (adjustable). Hot gas heating valve command shall be adjusted to maintain discharge air temperature setpoint.

M. DOAS ECONOMIZER:

Enable (comparative enthalpy): outside air (oa) enthalpy shall be compared with return air (ra) enthalpy point. The economizer shall enable when oa enthalpy is less than ra enthalpy - 2.0 btu/lb. The economizer shall disable when oa enthalpy is greater than ra enthalpy. The outdoor air temperature shall be less than 80 deg. F (adj.). The conditions for cooling mode shall be met. The dehumidification mode and the energy recovery wheel shall be disabled and the bypass dampers shall open to 100%.

Operation: when the economizer mode is enabled and the outdoor air temperature is 5 deg. F (adj.) Below the discharge setpoint, the free cooling mode shall be enabled. The outdoor air damper shall modulate to maintain the active discharge air temperature setpoint measured by the supply air sensor. During the free cooling mode the mechanical cooling and heat shall be disabled.

Free cooling mode shall be enabled when the unit is in economizer mode and the outdoor air temperature active is cooler than five degrees below the discharge air

temperature setpoint. During free cooling mode, mechanical cooling shall be locked out and the unit adjusts the outdoor air damper position to maintain the discharge air temperature setpoint.

N. DOAS ENERGY RECOVERY WHEEL OPERATION:

The energy recovery wheel (erv) start stop command shall be enabled whenever there is a call for relief fan. During ventilation mode or economizer mode the erv shall be disabled, except during the cleaning cycle, which occurs for two minutes every thirty minutes. During cooling operation, the energy recovery relief air bypass position command shall be locked at 0% (closed position) for full energy recovery. During heating operation, the position shall be modulated to maintain the discharge air temperature setpoint for variable effectiveness capacity control. Once the bypass damper becomes fully closed, the primary heater shall be engaged. During economizer mode and ventilation mode the erv bypass dampers shall be locked in the open position. The unit prevents frost accumulation on the erv by measuring the differential pressure across the inlet and the outlet of the energy recovery wheel. If the outdoor air temperature is below 5 deg. F (adj.) And the differential pressure across the energy recovery wheel is at 1.5 inches of water (adj.), the energy wheel variable speed drive shall slow down to defrost the wheel. The unit controller shall maintain the relief leaving temperature by modulating the energy recovery outdoor air bypass position command open. During normal operation, the vfd is at 100% (full speed) and the bypass damper is at 0% (closed). The energy wheel shall resume normal operational speed when the pressure drop decreases to below the pressure switch setpoint (factory set) or the outdoor air temperature has risen above the energy wheel outside air leaving temperature setpoint.

O. DOAS DEMAND CONTROL CO2 VENTILATION:

The unit controller shall modulate the outdoor air damper position command to maintain return co2 concentration to return concentration setpoint. The co2 concentration can also be communicated to return co2 concentration setpoint.

P. DOAS VENTILATION:

Ventilation mode shall be enabled when the outdoor air temperature is between the outdoor air cooling enable setpoint and the outdoor air heating enable setpoint. During ventilation mode, heating and cooling shall be locked out and the unit shall supply un-conditioned air. Ventilation mode shall be locked out whenever the unit is in dehumidification mode.

Q. DOAS SUPPLY FAN OPERATION:

When the unit becomes occupied, the outdoor air damper and the return air damper shall adjust to the minimum outdoor air damper position. After the dampers have modulated the fan sequence can begin. When the fan start sequence has begun, the unit controller shall command the variable speed drive for the supply fan to 50%. A supply fan status switch shall prove fan status. If after 2 minutes (adj.) The fan does not have a proven signal, the supply fan failure alarm shall be displayed and the unit shall shutdown requiring a manual reset. After the startup sequence, the unit controller shall control the speed of the supply fan to maintain a supply duct static pressure setpoint. Supply and relief fans are interlocked via software; a failure of either shall disable both.

R. DOAS STATIC PRESSURE HIGH LIMIT:

If for any reason the supply air pressure exceeds the supply air pressure high limit, the supply fan shall shut down. The unit shall be allowed to restart three times after a 15 minute off period. If the over-pressurization condition occurs on the fourth restart, the unit shall shut down and a manual reset diagnostic is displayed at the remote panel and/or the bas system.

S. DOAS RELIEF AIR AND BUILDING PRESSURE CONTROL:

A differential pressure switch shall monitor the differential pressure across the relief air fan. If the switch is detected to be open for 40 consecutive seconds after a request for relief fan operation a fan failure alarm shall annunciate at the bas and the relief fan shall stop. A manual reset shall be required.

T. DOAS RELIEF FAN OPERATION:

After completing the supply fan starting sequence, the exhaust fan start stop command shall be enabled. The unit controller shall enable the variable speed drive for the relief fan. The speed of the relief fan shall vary to maintain a return duct static pressure setpoint. The unit controller shall enable the variable speed drive for the relief fan. The speed of the relief fan shall vary to maintain a building static pressure setpoint. If the return duct static pressure reaches 3.00 inches of w.c. (adj.), the high limit pressure switch shall shut down the unit, requiring a manual reset to re-start the unit.

U. DOAS FILTER STATUS:

A differential pressure switch shall monitor the differential pressure across the filter(s) when the fan is running. If the switch closes during normal operation a dirty filter alarm shall annunciate at the bas.

V. DOAS SMOKE DETECTOR SHUTDOWN:

The unit shall shut down in response to a signal from the smoke detector indicating the presence of smoke. The smoke detector shall be interlocked to the unit through the dry contacts of the smoke detector. A manual reset of the smoke detector shall be required to restart the unit.

3.04 TYPICAL VRF SYSTEM

A. BUILDING AUTOMATION SYSTEM INTERFACE:

The building automation system (bas) will allow the user to monitor the status of variable refrigerant flow (vrf) terminal units, outdoor units, and secondary vrf equipment, and modify control parameters of terminal units and secondary vrf equipment as necessary to maintain the desired space conditions.

If communication between the vrf equipment and the bas is lost, the vrf system will continue to operate using the current control parameters stored within the equipment to

maintain the desired space conditions.

B. EXTERNAL CONTROL DEVICE:

In this specification the term ‘external control device’ is used to denote one or more user interface control devices that may be present in the system. The control devices that may be present are a local control device, vrf system control device, or a building automation system. When more than one external control device is present in the control system, the last command or configuration value received by the indoor unit governs indoor unit operation.

There may be other means to provide commands and configuration parameters to the vrf system, such as hardwired control inputs. However, these are not considered the typical system control use case and the specification does not address them as written.

C. ZONE TEMPERATURE SETPOINT CONTROL:

Dual setpoint. Two zone air temperature setpoints are present. When the terminal unit is in a cooling mode, it will control the zone air temperature value to the cooling temperature setpoint value. When the terminal unit is in a heating mode, it will control the zone air temperature value to the heating temperature setpoint value.

D. ON/OFF MODE:

The terminal unit has two modes that drive the overall operation of the unit, on and off mode.

On. The internal algorithm will control the unit to maintain the desired zone air temperature.

Off. The internal algorithm will not control the unit to maintain the desire zone air temperature. The algorithm will control components internal to the unit to minimize energy consumption and isolate it from vrf system refrigerant circuit. The zone air temperature sensor in use will be monitored to allow the zone air temperature value to be displayed at an external control device(s).

E. OPERATION MODE:

Operation mode is the primary control parameter of the indoor unit when it is in the on state. The operation mode command provided to the indoor unit from an eternal control device will determine the base hvac control function the indoor unit is providing. Available modes of operation are cool, dry, fan, heat, setback, and auto.

Cool. When the terminal unit operation mode is the cool state, liquid refrigerant is provided to the terminal unit. The amount of refrigerant entering the evaporator coil is regulated by the linear expansion valve. The position of lev is determined by an algorithm internal to the terminal unit. The algorithm calculates the temperature difference value between the measured zone air temperature value and the cooling temperature setpoint value. When a large difference value exists, the lev is driven open to allow more refrigerant into the evaporator coil. As the zone air temperature decreases the difference value becomes less. The algorithm will respond and drive the lev to more

closed position reducing the amount of refrigerant entering into the evaporator coil. As the difference value approaches zero, the system stabilizes and the amount of lev modulation is minimal.

Dry. When the terminal unit operation mode is the dry state, liquid refrigerant is provided to the terminal unit. The amount of refrigerant entering the evaporator coil is regulated by the linear expansion valve. The goal in dry mode is to remove water vapor from the air, not control the zone air temperature value to a zone temperature setpoint. When the terminal unit is commanded to the dry state, an algorithm internal to the terminal unit drives the lev to an open position. It is assumed that the position of the valve allows a sufficient amount of refrigerant to enter the coil, to cause the surface temperature of the coil fins to fall below the dew point temperature. The result is condensation that removes water vapor from the air passing through the coil.

When the zone air temperature value is greater than or equal to the cooling temperature setpoint, dry state is beneficial from both a humidity and zone temperature perspective because water vapor is being removed from the air in the zone and the difference value between the zone air temperature value and the cooling temperature setpoint value is reduced.

Continued dehumidification will cause the zone air temperature value to become less than the cooling temperature setpoint, which is undesirable. To combat the effect, the algorithm calculates the temperature difference value between the zone air temperature value and cooling temperature setpoint. Based on the difference value, the algorithm uses a sliding time scale method to modulate the lev between the open position and the fully closed position for a variable length of time. It is assumed that when the lev is in the fully closed position latent heat within the zone will cause the zone air temperature value to increase. The method allows some dehumidification to take place without significantly lowering the air temperature in the zone below the cooling temperature setpoint.

Fan. When the terminal unit operation mode is the fan state, the lev is closed and the terminal unit does not attempt regulate the air temperature in the zone. The temperature of the air in the zone may change due to latent heat within the zone. With the use of an external user interface, the speed of the fan may be modulated between the discrete states supported by the terminal unit.

Heat. When the terminal unit operation mode is the heat state, hot gas refrigerant is provided to the terminal unit. The amount of refrigerant entering the evaporator coil is regulated by the linear expansion valve. The position of lev is determined by an algorithm internal to the terminal unit. The algorithm calculates the temperature difference value between the measured zone air temperature value and the heating temperature setpoint value. When a large difference value exists, the lev is driven open to allow more refrigerant into the evaporator coil. As the zone air temperature increases the difference value becomes less. The algorithm will respond and drive the lev to more closed position reducing the amount of refrigerant entering into the evaporator coil. As the difference value approaches zero, the system stabilizes and the amount of lev modulation is minimal.

Setback. Some terminal units may not support the setback state. When the terminal unit operation mode transitions to setback state, the lev is driven closed and the zone air

temperature is allowed to drift. The amount of drift is bounded by the setback cooling temperature setpoint and the setback heating temperature setpoint.

When the zone air temperature value is greater than the setback cooling temperature setpoint the terminal unit will execute the setback cool algorithm. The algorithm modulates the lev to maintain the zone temperature to the setback cooling temperature setpoint.

When the zone air temperature value is less than the setback heating temperature setpoint the terminal unit will execute the setback heat algorithm. The algorithm modulates the lev to maintain the zone temperature to the setback heating temperature setpoint.

Auto. Some manufacturers' terminal units may not support the auto state of operation mode.

Auto mode is beneficial in a heat recovery system because it allows the terminal unit to automatically switch between cooling and heating states based on the current zone air temperature and the zone temperature setpoint in use. When the terminal unit operation mode is the auto state, two sub-states are available, auto (cool) and auto (heat).

Depending on the setpoint control configuration of the terminal unit, one of three setpoints is used for control. When the unit is configured for single setpoint control, the auto zone temperature setpoint is used. When the unit is configured for dual setpoint control, the cooling temperature setpoint is used when the unit is in the auto (cool) state and heating temperature setpoint is used when the unit is in the auto (heat) state.

When the terminal unit operation mode is the auto (cool) state, liquid refrigerant is provided to the terminal unit. The amount of refrigerant entering the evaporator coil is regulated by the linear expansion valve. The position of lev is determined by an algorithm internal to the terminal unit.

the algorithm subtracts the zone air temperature value from the zone temperature setpoint value, the result is the temperature difference value. When the result is a large positive value, the lev is driven open to allow more refrigerant into the evaporator coil. As the zone air temperature decreases the difference value becomes smaller. The algorithm will respond and drive the lev to a more closed position to reduce the amount of refrigerant entering into the evaporator coil. As the difference value approaches zero, the system stabilizes and the amount of lev modulation is minimal. When the difference value is negative, the lev is driven closed to prevent refrigerant from entering the evaporator.

When the terminal unit operation mode is the auto (heat) state, hot gas refrigerant is provided to the terminal unit. The amount of refrigerant entering the evaporator coil is regulated by the linear expansion valve. The position of lev is determined by an algorithm internal to the terminal unit.

The algorithm subtracts the zone temperature setpoint value from the zone air temperature value, the result is the temperature difference value. When the result is a large positive value, the lev is driven open to allow more refrigerant into the evaporator coil. As the zone air temperature increases the difference value becomes smaller. The

algorithm will respond and drive the lev to a more closed position reducing the amount of refrigerant entering into the evaporator coil. As the difference value approaches zero, the system stabilizes and the amount of lev modulation is minimal. When the difference value is negative, the lev is driven closed to prevent refrigerant from entering the evaporator.

Auto mode system changeover. The state of the terminal unit is auto (cool). When the absolute value of the difference value is greater than the factory defined changeover delta value, the terminal unit will transition to the auto (heat) state.

The state of the terminal unit is auto (heat). When the difference value is greater than the factory defined changeover delta setpoint, the terminal unit will transition to the auto (cool) state.

Fan control. When the indoor unit is in the off state, the fan is controlled to the minimum speed required to measure zone air temperature at the return air temperature sensor. This allows zone air temperature to be accurately measured while the indoor unit is in the off state.

Upon transition from the off state to the on state, the rpm of the fan is governed to match a manufacture specified, rpm value assigned to the each discrete fan speed state available in the unit. The number of distinct fan speed states and the fan rpm value for each state varies by manufacture and model of indoor unit. The fan speed state is controlled by one of two methods, automatic fan speed control or manual fan speed control. The choice of control method is made by a user of the system.

Upon indoor unit transition from the on state to the off state, the fan transitions to the state described when the indoor unit is in the off state.

Manual fan speed control. A user of the system selects a desired fan speed state. The fan speed rpm will change to match the manufacture specified rpm value and maintain the rmp value until a different fan speed state is selected or a change is made to another control parameter of the indoor unit that causes the fan to change to a different state.

Automatic fan speed control. When a user of the system selects the fan speed state auto, an algorithm internal to the indoor unit controls the selection of the fan speed state. The algorithm calculates the temperature difference value between the measured zone air temperature value and the zone temperature setpoint value in use. When a large difference value exists, the fan state selected will have a highest fan speed rpm value. As the difference value is reduced, the algorithm will change the fan speed in use to a state with a smaller rpm value.

F. VANE DIRECTION:

The terminal unit has movable air vanes to change the direction of air flow from the unit. Three air vane control modes are available: auto, swing, and manual. The external user interface is used to select the air vane position in use.

Auto. When the operation mode is cool state, the air vanes modulate to direct airflow parallel to the ceiling. When the operation mode is heat state, the air vanes modulate to direct airflow perpendicular to the ceiling.

Swing. Regardless of operation mode state, the air vanes continuously modulate between parallel and perpendicular flow to the ceiling in a periodic manner.

Manual. Regardless of operation mode state, the air vanes are fixed at a position. The number of individual positions available varies by manufacturer and model type. Typically, two to five fixed positions are supported.

G. BASEBOARD HEAT:

When the zone calls for heat and the bas has enabled the boiler plant, the indoor unit shall command the fin tube control valve to modulate open to provide heat to the zone. This shall be used as a secondary form of heating.

3.05 UNIT HEATER CONTROL (TYPICAL)

A. The EMS shall open the hot water control valve and cycle the fan as necessary to maintain the 72°F occupied or the reduced 62°F unoccupied space temperature setpoint. Provide an aquastat to prevent fan operation if the hot water supply temperature at the unit drops below 100°F.

B. Provide space temperature sensor guards as per paragraph 3.01.E.

C. Point List (Typical)

1. Space temperature
2. Control valve position command
3. Fan start/stop command

3.06 CABINET UNIT HEATER CONTROL (TYPICAL)

A. The EMS shall open the hot water control valve and cycle the fan to maintain the 72°F occupied or the reduced 62°F unoccupied space temperature setpoint. Provide an aquastat to prevent fan operation if the hot water supply temperature drops below 100°F.

B. Provide space temperature sensor guards as per paragraph 3.01.E.

C. Point List (Typical)

1. Space temperature
2. Control valve position command
3. Fan start/stop command

3.07 SMOKE DAMPER

A. Typical: Smoke damper shall close on signal from a smoke detector located in the duct or within 5 feet of the damper. The fire alarm system shall be capable of overriding this control and opening the damper remotely.

3.08 COMBINATION FIRE AND SMOKE DAMPER

A. The damper shall close at designated temperature
B. Typical: Smoke damper shall close on signal from a smoke detector located in the duct or within 5 feet of the damper. The fire alarm system shall be capable of overriding this control and opening the damper remotely.

END OF SECTION 230993

MP:xx

SECTION 232000

HVAC PIPING

PART 1 - GENERAL

1.01 SUBMITTALS

A. Product Data: Manufacturer's name and the schedule, type of class of all pipe and fittings.

1. Where optional materials are specified in the "Pipe and Fitting Schedule", provide a pipe schedule to indicate the options selected; including piped systems, pipe material and break down of pipe sizes.

B. Quality Control Submittals

1. Installers Qualification Data
   a. Welder Qualification Data: Copies of certification; including names and previous project experience of welders.
   b. Brazer Qualification Date for Refrigerant Piping: State refrigerant piping brazing experience; including names and list of previous project experience of brazers.

1.02 QUALITY ASSURANCE

A. Qualifications of Welding Procedures, Welders and Welding Operators: Comply with the following:

1. Section IX ASME Boiler and Pressure Vessel Code, Part QW Welding.
2. American Welding Society Standard AWS D10.9, AR-3

B. Qualifications of Brazers: Comply with the following:

1. Section IX ASME Boiler and Pressure Vessel Code, Part QB Brazing.
2. Certification of brazing operator by recognized authorities which require a qualification test.
3. Refrigerant Piping: The persons performing the brazing and their supervisors shall be personally experienced in refrigerant piping brazing procedures.

C. Codes and Standards

1. Welding: Qualify welding procedures, welders and operators in accordance with ASME B31.1, or ASME B31.9, as applicable, for shop and project site welding of piping work and ASME Boiler and Pressure Vessel Code, Section IX, Part QW Welding or in accordance with AWS B2.1 Specifications for Welding Procedure and Performance Qualification.

2. Certify welding of piping work using Standard Procedure Specifications by, and welders tested under supervision of, National Certified Pipe Welding Bureau (NCPWB).

3. Brazing: Certify brazing procedures, brazers, and operations in accordance with ASME Boiler and Pressure Vessel Code, Section IX, Part QB Brazing for shop and job-site brazing of piping work or in accordance with AWS B2.2 standard for Brazing Procedure and Performance Qualification.

4. Manufacturers Standardization Society of the Valve and Fittings Industry (MSS) Compliance: Comply with:
   MSS SP-58 Pipe Hangers and Supports - Materials, Design and Manufacture
   MSS SP-69 Pipe Hangers and Supports - Selection and Application
   MSS SP-89 Pipe Hangers and Supports - Fabrication and Installation Practices
   Piping shall be supported at distances not exceeding the spacing specified in MC Table 305.4 or in accordance with the above MSS standards.

5. Comply with ANSI B31.1A, ASME Code for pressure Piping, and ASHRAE Equipment Guide.

1.03 DESIGN AND PERFORMANCE REQUIREMENTS

A. Heating Hot Water Piping

Operating Pressure	125 psig
Operating Temperature	150º - 250ºF
Design Code (ANSI)	B31.9

B. Refrigerant Piping

Operating Pressure	700 psig
Operating Temperature	40º - 120ºF
Design Code (ANSI)	B31.5

PART 2 – PRODUCTS

2.01 STEEL PIPE AND FITTINGS

A. Standard Weight Schedule 40 or Extra Heavy Weight Schedule 80 Pipe, black or galvanized: ASTM A 53, ASTM A 106 or ASTM A 135.

B. Flanges, Welding Neck Type, Same Pressure Rating as Adjoining Pipe: ASME B16.5.

C. Welding Fittings, Carbon Steel:

1. Butt Welding Type: ASME B16.9
   a. Allied Piping Products Co., Inc.'s Branchlets, Type 1 or 2
   b. Bonney Forge Corp's Weldolets
2. Socket Welding Type: ASME B16.11
   a. Allied Piping Products Co., Inc.'s Branchlets, Type 1 or 2
   b. Bonney Forge Corp's Threadolets or Sockolets

D. Compact Design Weld Fittings: Landish Co.'s LP, Nibco Inc's Husky, Taylor Forge Inc.'s Compact Line, Tube Turns Inc.'s Econo.

E. Malleable Iron, Steam Pattern Threaded Fittings

1. 150 lb. Class: ASME B16.3
2. 300 lb. Class: ASME B16.3

F. Cast Iron Fittings

1. Drainage Pattern, Threaded: ASME B16.12
2. Steam Pattern, Threaded: ASME B16.4
   a. Standard Weight: Class 125
   b. Extra Heavy Weight: Class 250
3. Flanged Fittings and Threaded Flanges: ASME B16.1
   a. Standard Weight: Class 125
   b. Extra Heavy Weight: Class 250

G. Unions: Rated 250 psi at 210 degrees F; ASME B16.39

H. Unions: Rated 250 psi at 275 degrees F; ASME B16.39

I. Couplings: Same material and pressure rating as adjoining pipe, conforming to standards for fittings in such pipe. Use taper tapped threaded type in screwed pipe systems operating in excess of 15 psig.

J. Nipples: Same material and strength as adjoining pipe, except nipples having a length of less than one inch between threads shall be extra heavy.

2.02 COPPER AND BRASS PIPE, TUBING AND FITTINGS

A. Water Tube, Types K, L, and M: ASTM B 88

B. Wrot Copper Water Tube Fittings, Solder Joint: ASME B16.22

C. Refrigerant Tube, Dry Sealed, Soft Annealed: ASTM B 280

D. Flared Tube Fittings:

1. Water Tube Type: ASME B16.26
2. Automotive Tube Type: SAE J512
3. Refrigerant Tube Type: SAE J513

E. Flanges: Conform to the Standards for fittings used in systems.

1. Brazing Flanges: ASME B16.24, hubs modified for brazing ends.

F. Unions: Cast bronze, 150 lb. Class, bronze-to-bronze seats, threaded or solder joint.

G. Cast bronze threaded fittings, Class 125 working steam pressure, conforming to ASTM B62 and ASME B16.24.

H. Hydronic press fittings (press fit - pressure-sealed joints) by Viega ProPress, Elkhart Xpress, NIBCO Press System, Grinnell G-Press (or approved equal) up to and including 4" in diameter. O-rings: EPDM; Special Tools recommended and approved by the Manufacturer. Press fittings are not acceptable for refrigerant piping.

I. Mechanically formed tee-branch outlets may be used on aboveground copper tubing. The mechanically formed outlet shall be by T-Drill Industries, Inc. or approved equal. All joints formed in this manner shall be brazed in compliance with manufacturer's recommendations. Soft soldered joints shall not be permitted.

2.03 JOINING AND SEALANT MATERIALS

A. Thread Sealant

1. Lake Chemical Co.'s, Slic-Tite.
2. Loctite Corp's pipe sealant with Teflon.

B. Solder: Solid wire type conforming to the following:

1. Lead-free tin-Silver solder (ASTM B 32 Alloy Grade Sn 96): All-State Welding Products Inc.'s 430, J. W. Harris Co. Inc's Stay-Brite or Engelhard Corp's Silvabrite.

C. Soldering Flux for Soldered Joints

1. Solder: All-State Welding Products Inc.'s Duzall; J. W. Harris Co. Inc.'s Stay-Clean; Engelhard Corp's General Purpose Liquid or Paste.

D. Brazing Alloys

1. AWS A5.8, Class BCuP-5, for brazing copper to brass, bronze, or copper; Englehard's Silvaloy 15; J. W. Harris Co.Inc.'s Stay-Silv 56; and Handy & Harman's Braze 560.
2. AWS A5.8, Class BAg-7, for brazing copper to steel or stainless steel; Englehard's Silvaloy 56-T; J. W. Harris Co.Inc.'s Safety-Silv 56; and Handy & Harman's Braze 560.

E. Brazing Flux: FS O-F-499, Type B; Handy & Harman's Handy Flux or J. W. Harris Co. Inc.'s Stay-Silv.

F. Electrodes and Welding Rods

1. Electrodes for use in Arc Welding: Heavily coated, not larger then 3/16 inch diameter exclusive of coating, unless otherwise acceptable.
2. Welding Rods: Free flowing when fused, so as to avoid excessive puddling.
3. Electrodes for Welding Stainless Steels: Coated and used with reverse polarity
4. Filler material shall conform to the appropriate AWS-ASTM specification.

G. Flange Gasket Material

1. For Use with Cold Water or Chilled Water: 1/16 inch thick rubber and chemical compatibility with the system fluid.
2. For Use with Hot Water, Air or Steam: Waterproofed non-asbestos mineral or ceramic fiber, or a combination of metal and waterproofed non-asbestos mineral or ceramic fiber, designed for the temperature and pressures of the piping systems in which installed and chemical compatibility with the system fluid.

H. Anti-Seize Lubricant: Bostick Inc.'s Never Seez or Dow Corning Corp's Molykote 1000.

2.04 GROOVED PIPING SYSTEM

A. Grooved piping system as manufactured by Victaulic Co., Grinnell by Tyco, Gruvlok by ANVIL or acceptable manufacturer.

B. Pipe:

1. Standard Weight Schedule 40 or Extra Heavy Weight Schedule 80 Pipe, black or galvanized: ASTM A 53, ASTM A 106 or ASTM A 135.
2. Use roll grooved pipe, cut grooved end piping is not acceptable.
3. Couplings: Victaulic Co.'s flexible type Style 77 and W77,-having pressure rating of:
   a. 1000 psi for 3/4 inch to 6 inch
   b. 800 psi for 8 inch to 12 inch
   c. 350 psi for 14 inch to 24 inch

C. Couplings and Fittings for Grooved End Pipe

1. Grooved-End-Tube Couplings: Rigid pattern gasketed fitting. Ductile-iron housing cast with offsetting, angle-pattern bolt pads to provide visual confirmation of joint integrity upon metal-to-metal pad contact. Tongue and recess rigid type couplings may only be used if the contractor uses a torque wrench for installation. Required torque shall be in accordance with the manufacturer's latest recommendations and each coupling shall be tagged indicating the specific value of torque attained to confirm joint rigidity and proper installation. Synthetic EPDM gasket similar to Grade EHP rated for maximum 250 deg F or Grade E EPDM rated to maximum of 230 deg

F for use with housing, and steel bolts and nuts. Couplings shall be manufactured to connect copper tubing sized tube and fittings.

2. Couplings: Victaulic co.'s Zero-Flex Style 07 and 107H, having minimum pressure rating of:
   a. Style 107H or Style 07
      1) 750psi from 2 inch to 5 inch
      2) 700psi for 6 inch
      3) 600psi for 8 inch
      4) 500psi for 10 inch (07 only)
      5) 400psi for 12 inch (07 only)
   c. Style W07: 350 psi.
1. Fittings: By same manufacturer as couplings, having pressure ratings equal to or greater than couplings. Comply with the following standards:
   a. Steel: ASTM A53 or A106, Grade B
   b. Wrought Steel: ASTM A234, Grade WPB
   c. Ductile Iron: ASTM A536
2. Gaskets for Use with Grooved End Pipe and Fittings: Type and materials as recommended and furnished by the fitting manufacturer, for the service of piping system in which installed.
3. Flange Adapter: Flat face, ductile iron housings with elastomeric pressure responsive gasket, for direct connection to ANSI Class 125 or 150 flanged components. Victaulic Style 741/W741.
4. Pipe Joint Make-up:
   a. Grooved Pipe Joint. Make up joint with grooved end fittings and couplings, in conformance with the manufacturer's printed installation instructions. Pipe grooving shall be rolled in accordance with joint manufacturer's specifications. Lubricate gasket exterior including lips, pipe ends and housing interiors to prevent pinching the gasket during installation. Lubricant shall be as recommended by coupling manufacturer.

2.05 PACKING MATERIALS FOR BUILDING CONSTRUCTION PENETRATIONS

A. Oakum: FA A-A-1186

B. Mechanical Modular Seals: Thunderline Corp's Link Seal wall and floor seals designed for the service of piping system in which installed.

2.06 DIELECTRIC CONNECTORS

A. Brass nipples, couplings, fittings, valves or combinations of are not considered a dielectric connection and shall not be an acceptable assembly for such.

B. Dielectric waterway fittings with an inert, non-corrosive thermoplastic lining (NSF/FDA listed). Manufacturer: Grinnell, GruvLok or Victaulic Co.

C. Flange Electrical Insulation Kit: Consisting of dielectric sleeves and washers and dielectric gasket.

   1. Rated 250 psi at 210 degrees F.

2. Rated 250 psi at 275 degrees F.

D. Flange Unions: Rated 175 psi at 210 degrees F; ASTM B16.42 (iron) and ASTM B16.24 (bronze).

2.07 PIPE SLEEVES

A. Type A: Schedule 40 steel pipe.

B. Type B: No. 16 gauge galvanized sheet steel.

C. Type C: Schedule 40 steel pipe and 1/4 inch steel collar continuously welded to pipe sleeve. Size steel collard as required to span a minimum of one cell or corrugation, on all sided of the rough opening thru the metal deck.

D. Type D: No. 16 gauge galvanized sheet steel with 16 gauge sheet steel metal collar rigidly secured to sleeve. Size metal collard as required to span a minimum of one cell or corrugation on all sides of the rough opening thru the metal deck.

2.08 FLOOR, WALL AND CEILING PLATES

A. Cast Brass: Polished chrome plated finish, with set screw.

1. Solid Type: Models 5 and 5T by Pegasus Manufacturing Inc., Cheshire, CT; and Models 951 – 960 (inclusive) by Bridgeport Plumbing Products, Moultrie, GA.
2. Split Type: Models 3 and 3T by Pegasus Manufacturing Inc., Cheshire, CT.

B. Cast Iron: Solid type, unplated, with set screw. Model 395 by Grinnell Corp., Cranston, RI.

2.09 DRIP PANS

A. Fabricated from corrosion-resistant sheet metal with watertight joints, and with edges turned up $2^1/_2$". Reinforce top, either by structural angles or by rolling top over 1/4" steel rod. Provide hole, gasket, and flange at low point for watertight joint and 1" drain line connection.

PART 3 - EXECUTION

3.01 INSTALLATION – GENERAL

A. The drawings show the general arrangement of pipe equipment but do not show all required fittings and offsets that may be required. Provide all necessary fittings, offsets and pipe runs based on field measurements.

B. Provide dielectric connections whenever connecting dissimilar materials

C. Install vertical piping plumb and piping generally parallel to walls and column

center lines, unless shown otherwise on the drawings. Space piping, including insulation, to provide one inch minimum clearance between adjacent piping or other surface. Unless shown otherwise, slope steam, condensate and drain piping down in the direction of flow not less than 25 mm (one inch) in 12 m (40 feet). Provide eccentric reducers to keep bottom of sloped piping flat.

D. Install piping clear of door swings and above sash heads.

E. Make allowances for expansion and contraction.

F. Use fittings for offsets and direction changes, except for Type K soft temper water tube.

G. Cut pipe and tubing ends square: ream before joining.

H. Threading: Use American Standard taper pipe thread dies.

1. Thread brass pipe with special brass threading dies.

I. Make final connections to equipment with unions, flanges, or mechanical type joint couplings.

J. Provide taps and install wells in piping for EMS/control system sensors and flow measurement devices.

K. Install pipes in accordance with recognized industry practices which will achieve permanently-leakproof piping systems, capable of performing each indicated service without piping failure. Align piping accurately at connections, within 1/16" misalignment tolerance. Comply with ANSI B31 Code for Pressure Piping.

L. Locate piping runs, except as otherwise indicated, vertically and horizontally (pitched to drain) and avoid diagonal runs wherever possible. Orient horizontal runs parallel with walls and column lines. Locate runs as shown or described by diagrams, details and notations. Run piping in shortest route which does not obstruct usable space or block access for servicing building and its equipment. Hold piping close to walls, overhead construction, columns and other structural and permanent-enclosure elements of building; limit clearance to 1/2" where furring is shown for enclosure or concealment of piping, but allow for insulation thickness, if any. Where possible, locate insulated piping for 1" clearance outside insulation. All piping in finished and occupied spaces shall be concealed from view by locating piping in column enclosures, in hollow wall construction or above suspended ceilings; do not encase horizontal runs in solid partitions, except as indicated on the Drawings.

M. Do not run piping through transformer vaults and other electrical or electronic equipment spaces and enclosures. Install drip pan under piping that must be run above electrical equipment. Do not run piping in stairwells or elevator equipment rooms except for systems serving those spaces.

N. In the outlet from each cooling coil condensate drain pan, provide a tee with a brass plug at one end to facilitate cleaning of drain. Additionally, provide a single "P" trap for proper operation of the unit.

O. Riser Casings: Unless otherwise indicated on the drawings, all exposed risers, including the drop risers, shall be enclosed in casings extending from floor to a height of 7'-6" above floor. Riser casings shall be installed after the pipe insulation work is completed, inspected and approved. Casings shall be made of 24-gage galvanized sheet steel, with the upper end wired with 1/8" half hard wire. Each casing shall be fastened to the wall at the upper end with a metal band and round head screws. Seams shall be located at the rear of the casing.

P. Casing for pipe at or near floors: Where pipes at or near floors are indicated on the Drawings to be encased, pipes shall be supported, insulated, and then enclosed in a casing of No. 20-gage galvanized sheet steel.

Q. Protection of Refrigerant Piping Located Inside Buildings: Refrigerant piping and fittings installed at a height less than 7’-3” above the floor shall be concealed or otherwise protected from mechanical damage except at the point of connection to terminal equipment.

R. Refrigerant piping that crosses an open space that affords passageway in any building shall be not less than 7’-3” above the floor unless the piping is located against the ceiling of such space. Refrigerant piping shall not be placed in any elevator, dumbwaiter or other shaft containing a moving object or in any shaft that has openings to means of egress. Refrigerant piping shall not be installed in an enclosed public stairway, stair landing or an exit.

S. Refrigerant piping shall not be installed in public corridors unless it complies with all of the following conditions:

1. The refrigeration system to which the piping is associated utilizes a Group A-1 refrigerant and contains not more than 10 pounds of refrigerant per system, and there is not more than one system’s refrigerant piping per tenant per public corridor; and

2. A complete discharge of any one refrigerant system’s charge into the volume of the public corridor would be insufficient to achieve 50% of the allowable refrigerant RCL set forth in ASHRAE Standard 34; and

3. Refrigerant piping and fittings within a public corridor are installed with brazed joints or the refrigerant equipment manufacturer provided pre-charged tubing systems installed in accordance with the refrigerant equipment manufacturers instructions. Refrigerant piping and fittings shall be concealed or otherwise protected from mechanical damage.

T. Refrigerant piping shall not penetrate floors, ceilings or roofs except the following:

1. Penetrations connecting the basement and the first floor

2. Penetrations connecting the top floor and a machinery penthouse or roof installation

3. Penetrations connecting adjacent floors served by the refrigeration system.

4. Penetrations by piping in a direct system where the refrigerant quantity does not exceed the RCL set forth in ASHRAE Standard 34 for the smallest occupied space through which the piping passes.

5. Penetrations by piping enclosed by gas-tight, fire resistive duct or shaft as shown on the Drawings.

U. For steel piping runouts not detailed on the Drawings, use three elbow connections between runouts and mains.

V. Connections to Equipment: provide three elbow runouts to all rotating equipment such as pumps and chillers. Provide swing connections for boilers. Provide two elbow connections to fuel oil tanks.

W. Connections to Building Structure: connect to trusses and joints at panel points. Provide supplementary steel framing at panel points to transfer loads to framing.

X. Connection to domestic water system shall be protected by reduced pressure principal backflow preventer.

Y. Condensate drain piping from cooling coil drain pans shall be pitched at not less than one-eighth unit vertical in 12 units horizontal (1-percent slope) in the direction of discharge.

3.02 WATER AND GLYCOL PIPING SYSTEMS

A. Pitch

1. Pitch horizontal piping 1/8 inch per 10 ft. in direction indicated on drawings. When direction of flow is not indicated, pitch supply piping up in direction of flow and return piping downward indirection of flow.
2. Pitch single pipe systems up in direction of flow 1/8 inch per 10 ft.

B. Air Vents: Install air vents at locations indicated on the drawings and at each high point in system. Use manually operated air vents, unless otherwise indicated.

C. Drains

1. Install piping to be completely drainable. Provide drains at low points, consisting of a 1/2 inch Drain Valve (Apollo #78-200) and at the following locations and equipment:
   a. In each section of piping separated by valves.
   b. For each riser, where riser or runout to riser has a valve installed.
   c. For each heating cooling unit, having valves in supply and return

connections.

d. In low point of piping to each down fed convector or radiator.

D. Runouts: Connect runouts to upfeed risers to top of mains and runouts to downfeed riser to bottom of mains.

3.03 GAS PIPING SYSTEMS

A. Install in compliance with the National Fuel Gas Code-NFPA 54 and as required by the serving gas supplier.

3.04 PIPE JOINT MAKE-UP

A. Threaded: Threads shall conform to ASME B1.20, joint compound shall be applied to male threads only and joints made up so no more than three threads show. Coat exposed threads on steel pipe with joint compound, or red lead point for corrosion protection.

B. Soldered: Thoroughly clean tube end and inside of fitting with sandpaper or wire brush. Apply flux to the pre-cleaned surfaces. Install fitting, heat to soldering temperature, and join the metals with type solder specified. Remove residue.

C. Flange:

1. Install threaded companion flanges on steel pipe; flanges on galvanized pipe are not required to be galvanized.
2. Provide a gasket for each joint.
   a. Hot Water Pipe Gasket: Coat with a thin film of oil before making up joint.
   b. Compressed, Control, and Instrument Air Pipe Gasket: Coat with a thin film of oil before making up joint.
3. Coat bolt threads and nuts with anti-seize lubricant before making up joint

D. Welded: Beveling, spacing and other details shall conform to ASME B31.9. See Welder's qualification requirements under "Quality Control Submittals" in Section 1.03, Submittals.

E. Welded: Beveling, spacing and other details shall conform to ASME B31.1. See Welder's qualification requirements under "Quality Control Submittals" in Section 1.03, Submittals.

F. Compact design weld fittings up to and including 12 inch in size may be used in low pressure steam and heating hot water piping systems.

G. Brazed Joint: Thoroughly clean tube end and inside of fitting with sandpaper or wire brush. Apply flux to the pre-cleaned surfaces. Install fitting, heat to brazing temperature, and join the metals with brazing alloy. Remove residue.

H. The use of mechanical formed outlets on copper tubing instead of soldered joints is acceptable. The maximum diameter of branches shall be $2^1/_8$". Use appropriate tool designed for mechanical formed outlets on copper tubes. All mechanical

formed tee fittings shall be brazed in accordance with the Copper Development Associations Copper Tube Handbook Using BCuP series filler metal. All mechanical formed branch collars shall be listed by UPC, and Underwriters Laboratory. They shall comply with ASME Code for pressure piping ANSI B31.5c.

I. Press-Fit (Pressure Seal) Fittings: Connections shall be made in accordance with the manufacturer's installation instructions. Copper tubing shall be cut at right angles using displacement type cutter or fine-toothed saw. Burrs shall be removed from inside and outside of tubing to prevent cutting sealing element. Mark insertion depth according to manufacturer's insertion depth chart. Seals and grip ring shall be checked for correct fit. Only the manufacturer's sealing elements shall be used. Press fitting shall be slid onto tubing while turning slightly to the marked depth. Oils or lubricants shall not be used. Fitting connections shall be made with the tool provided by manufacturer. The manufacturer's assembly tool shall be used to perform the pressing process. For locations where there is insufficient access to accommodate the pressing tool, this type of joint is not allowed. Sufficient clearance must be left around each joint to allow room for the pressing tool and jaw to be attached without interference when repairing the system in the future.

J. Dissimilar Pipe Joints

1. Joining Dissimilar Threaded Piping: Make up connection with a threaded coupling or with companion flanges.
2. Joining Dissimilar Non-threaded Piping: Make up connection with adapters recommended by the manufacturers of the piping to be joined.
3. Joining Steel pipe, Brass or Copper Tubing: Make up joint with a dielectric connector.

3.05 PIPING PENETRATIONS

A. Sleeve Schedule: Unless otherwise shown, comply with the following schedule for the type of sleeve to be used where piping penetrates wall, floor, or roof construction.

	CONSTRUCTION	SLEEVE TYPE
1.	Frame construction	None Required
2.	Foundation walls	A*
3.	Non-waterproof interior walls	B*
4.	Non-waterproof interior floors on metal decks	D*
5.	Non-waterproof interior floors not on metal decks	B*
6.	Floors not on grade having a floor drain	A*
7.	Floors over mechanical equipment, steam service, machine and boiler rooms.	A
8.	Floors finished or to be finished with latex composition or terrazzo, and on metal decks.	D*
9.	Floors finished or to be finished with latex composition or terrazzo and not on metal decks.	A
10.	Earth supported concrete floors	None Required

11.	Exterior concrete slabs on grade	A
12.	Fixtures with floor outlet waste piping	None Required
13.	Metal roof decks	C
14.	Mon-metal roof decks	A
15.	Waterproof floor on metal decks	D
16.	Waterproof floors not on metal decks	A
17.	Waterproof walls	A

* - core drilling is permissible in lieu of sleeves where marked with asterisks.

B. Diameter of Sleeves and Core Drilled Holes

1. Unless otherwise specified, size holes thru floors and walls in accordance with the through penetration fire stopping system being used.
2. Size holes thru exterior masonry walls or waterproofed walls above inside earth or finished floors, and exterior concrete slabs in accordance with the following:
   b. Un-insulated (Bare) Pipe: Inside diameter of sleeve or core drilled hole 1/2 inch greater than outside diameter of pipe, unless otherwise specified.
   c. Insulated Pipe: Inside diameter of sleeve or core drilled hole 1/2 inch greater than outside diameter of insulation, unless otherwise specified.
   d. Mechanical Modular Seals: Size holes in accordance with the manufacturer's recommendations.

C. Length of Sleeves (except as shown otherwise on Drawings)

1. Walls and Partitions: Equal in length to total finished thickness of wall or partition.
2. Floors, Finished: Equal in length to total finished thickness of floor and extending 1/2 inch above the finished floor level, except as follows:
   a. In furred spaces at exterior walls, extend sleeve one inch above the finished floor level.
3. Exterior Concrete Slabs: Equal in length to total thickness of slab and extending 1/2 inch above the concrete slab.
4. Roofs: Equal in length to the total thickness of roof construction, including insulation and roofing materials, and extending one inch above the finished roof level.

D. Packing of Sleeves and Core Drilled Holes

1. Use through-penetration firestop devices, forming materials, and fill, void or cavity materials to form through-penetration firestops to prevent the passage of flame, smoke, fumes, and hot gasses as detailed in the UL Fire Resistance Directory, Warnock Hersey Certification Listings Book, or the Omega Point Laboratories Listings Directory. Where applicable design is not detailed in the Directories use forming materials and fill, void or cavity material to form appropriate through-penetration firestop in accordance with printed details and installation instructions from the Company producing the acceptable forming materials and fill, void or

cavity materials.

2. Firestop through-penetration of floors, walls, partitions, ceilings, and roof in accordance with the fire resistance rating assigned to the walls, partitions, floors, ceilings, and roofs on the Construction Work Drawings.
3. Pack sleeves in exterior masonry walls or waterproofed walls above inside earth or finished floors with oakum to within 1/2 inch of each wall face, and finish both sides with one-part, non-sag polysulfide base sealant: Pecora's Synthacalk GC-9, Products Research and Chemicals PRC Rubber Calk 7000, or Sonneborn's One Part Polysulfide Sealant. Optional use of Mechanical Modular Seals is recommended.

E. Weld metal collars of sleeves to the upper surface of the metal deck. Seal voids under the metal collar as recommended by the manufacturer of the metal deck.

3.06 FLOOR, WALL AND CEILING PLATES

A. Install plates for exposed un-insulated piping passing thru floors, walls, and exterior concrete slabs as follows:

1. In Finished Spaces
   a. Piping 4 Inch Size and Smaller: Solid or split, chrome plated cast brass.
   b. Piping over 4 Inch Size: Split, chrome plated cast brass.
2. Unfinished Spaces (including exterior concrete slabs): Solid, unplated cast iron.
3. Fasten plates with set screws.
4. Plates are not required in pipe shafts or furred spaces.

3.07 DRIP PANS

A. Provide drip pans under piping passing over or within 3 feet of electrical equipment, and elsewhere as indicated. Hang from structure with rods and building attachments, weld rods to side of drip pan. Brace to prevent sagging or swaying. Connect 1" drain line to the drain connection and run to a conspicuous location 6" above the floor, the nearest plumbing drain, or elsewhere as indicated on drawings.

3.08 CLEANING, FLUSHING, AND INSPECTING

A. Clean exterior surfaces of superfluous materials and prepare for application of specified coatings (if any). Flush out piping systems with clean water before proceeding with required tests. Inspect each run of each system for completion of joints, supports and accessory items. Inspect pressure piping in accordance with procedures of ASME B31.

B. Upon completion of the installation, remove all protecting materials, all scale and grease and leave in a clean condition for painting.

C. Hanger Adjustments: adjust hangers so as to distribute loads equally on attachments.

D. Support Adjustment: provide grout under supports so as to bring piping and equipment to proper level and elevation.

3.09 PIPING APPLICATIONS

A. Gas Piping: Provide a gas supply service connection for burner ignition and pilot to each oil burner. All gas connections shall be installed by a Licensed Plumber.

B. Fill and Make-Up Water System to match connecting Plumbing Work.

C. Standard Weight Red Brass Pipe: Use for compressed air reducing station, piping between boiler and water column, between boiler and water feeder, between boiler and steam gauge, between boiler and secondary low water cut-off, and drip piping from water column, water feeder and secondary low water cut-off.

D. Schedule 80 Black Steel Pipe: Use for steam heating return mains, return riser runouts, steam heating coil returns, drips, blow-offs, boiler feed pump discharge, boiler equalizer, steam vent lines, and for all fill and vent piping buried in the ground. Pipe buried in the ground shall be protected with heavy coat of black asphaltum paint.

3.10 PIPING AND FITTING SCHEDULE

A. Abbreviations: The following abbreviations are applicable to the Pipe and Fitting Schedule.

BS – black steel
CI – cast iron
GE – grooved end
GMI – galvanized malleable iron
GS – galvanized steel
MI – malleable iron
SE – screwed end
ST – steel
SW – standard weight
WE – weld weight
XH – extra heavy weight

B. Where options are given, choose only one option for each piping service. Deviations from selected option will be allowed if reviewed with Engineer prior to installation.

C. Schedule of Pipe and Fittings for the different piping services is as follows:

1. Domestic Hot Water and Circulating (DHW & DHWC) 125 psig and less:
   a. 3 inch and less: Type L hard temper copper tubing, with wrot copper solder fittings, and solder or press fittings.
2. Natural Gas Aboveground:
   a. 1-1/2 inch and less: SW BS pipe, with SE 150 lb. MI fittings, or

WE & SW ST fittings.

b. 2 inch and up: SW BS pipe with WE & SW St fittings.

3. Liquefied Petroleum, (LP), Aboveground:
   a. Outside Buildings: Type K soft temper copper tubing, with brass or bronze flared fittings.
   b. Inside Buildings: SW BS pipe, with SE & 150 lb. MI fittings, or WE & SW ST fittings.
4. Hot Water Supply and Return (HWS & HWR) 125 psig and less:
   a. 3 inch and less: SW BS pipe with SE & SW CI fittings, or Type L hard temper copper tubing with wrot copper solder fittings and solder or press fittings.
   b. 4 inch size: SW BS pipe, with SE & SW CI fittings, or WE & SW ST fittings, or GE & GE fittings.
   c. 5 inch and up: SW BS pipe, with WE & SW ST fittings or GE & GE fittings.
5. Refrigerants (RS, RL, HG & RD) 500 psig and less: Refrigerant lines shall be ACR tube per ASTM B280. Joints in refrigerant piping shall be brazed. Flared compression fittings may be used only at the terminal equipment connections for A1 refrigerants only. Soldered joints and mechanical press fittings for refrigerant lines are not permitted.
6. Condensate Drain Piping: Type M hard temper copper tubing with wrot copper solder fittings, and solder or type L hard temper copper tubing with press fittings.
7. Drain Piping other than Condensate and Overflow Drains: SW BS pipe, with SE SW CI fittings, or WE SW ST fittings.

END OF SECTION 232000

MP:xx

SECTION 232001

STRAINERS

PART 1 - GENERAL

1.01 SUBMITTALS

A. Product Data: Manufacturer's catalog sheets, specifications, and installation instructions for each type strainer.

PART 2 - PRODUCTS

2.01 STRAINERS

A. Body:

1. Type: **Y-type**

2. Material: ASTM A 126 Grade B cast iron, or ASTM A 216 WCB cast steel. ASTM B 62 cast bronze may be used in systems operating at a maximum of 125 psig steam or 175 psig water.

B. Pressure Ratings: 125 psig WSP, 175 psig OWG, when installed in systems operating at pressures up to 125 psig steam or 175 psig water, and 250 psig WSP and 400 psig OWG when installed in systems operating at pressures over 125 psig steam or 175 psig water.

C. End Connections: Screwed ends for use in threaded piping 3 inches in size and smaller; flanged ends in piping 4 inches and larger; and solder ends or screwed ends with solder adapters in Types K, L and M copper tubing.

D. Screens: Fabricate from 18-8 stainless steel or monel metal. For use in steam piping through 6 inch pipe size, 1/32 inch perforations and over 6 inch size, 3/64 inch perforations. For use in closed water and condensate return piping, 1/16 inch perforations through 3 inch size, and 1/8 inch perforations over 3 inch size. In open systems such as cooling tower piping systems, 1/8 inch perforations. Minimum free screen area, double the internal cross sectional area of the inlet pipe. Rigidly reinforce strainer screens, in sizes 14 inches and larger, with stainless steel channels and cross braces.

E. Caps and Covers: Faced and gasketed screen retaining cap, or a straight thread bushing with a blow-out proof gasket, or an internally milled tapered gasketed bushing, for strainers 3 inches in size and smaller. Strainers 4 inch in size and larger shall have a bolted gasketed screen cover. Provide graphited non-asbestos mineral or ceramic fiber gaskets.

PART 3 - EXECUTION

3.01 INSTALLATION

A. Provide strainers in steam piping 2 inches in size and larger with a blow-off valve full size of blow-off outlet. In water piping 1-1/2 inch and larger, provide a drain valve with hose bibb connection. Install a short nipple and pipe cap in the blow-off outlets of strainers not specified to have a blow-off valve or drain valve.

B. Install strainers indicated or specified to be installed in the suction or discharge piping connections to pumps in the horizontal piping run as close to pump as possible.

C. Provide strainers in piping immediately upstream of the following equipment and elsewhere as indicated:
   1. Pumps.
   2. Steam traps serving main steam drips.
   3. Temperature control valves.
   4. Pressure reducing valves.
   5. Temperature and pressure regulating valves.

END OF SECTION 232001

MP:xx

SECTION 232003

THERMOMETERS AND GAUGES

PART 1 GENERAL

1.01 SUBMITTALS

A. Product Data: Manufacturer's catalog sheets, specifications and installation instructions for each item specified.

1.03 QUALITY ASSURANCE

A. Regulatory Requirements: Where Federal, NSF, ASME or other standards are indicated or required, products shall meet or exceed the standards established for material, quality, manufacture and performance.

PART 2 PRODUCTS

2.01 MANUFACTURERS/COMPANIES

A. Dresser Instruments.

B. Marsh Bellofram.

C. Moeller Instrument Co.

D. Taylor Precision Products.

E. H.O. Trerice Co.

F. Weksler Instruments Corp.

2.02 THERMOMETERS

A. General Design Features:
   1. Scale Ranges: 1-1/2 times actual working temperature required for the particular application, as approved.
      a. Maximum of two degrees between graduations and ten degrees between numerals.
      b. When scale ranges are in excess of 100 degrees, maximum range between numerals may be 20 degrees, or as otherwise approved for the particular application.
   2. Direct Reading Thermometers: Bimetallic actuated, dial type, straight pattern, angle pattern, or adjustable angle pattern as required.
   3. Remote Reading Thermometers: Vapor tension actuated, or gas actuated type, with extension capillary tube of length as required for the particular application.

a. Case type as required for the particular mounting application.

4. Thermometers for Sensing Liquid Temperature: Furnish with separable sockets.
   a. Sockets for Use in Insulated Piping, Insulated Tanks or Similar Equipment: Extension lagging neck type, of length as required to compensate for insulation thickness, and proper immersion.

2.03 THERMOMETERS FOR MEASURING LIQUID TEMPERATURE

A. Bimetallic Actuated Thermometers: Comply with ASME B40.3, Accuracy Grade A.
   1. Construction: Type 304 stainless steel, all welded construction, with clear acrylic plastic or shatterproof glass crystal.
   2. Dial: White enamel background with bold black figures and graduations.
   3. Head Size:
      a. Installation in Piping: 3inch diameter.
      b. Installation in Tanks and Similar Equipment: 5 inch diameter.
   3. Stem: Length as required for proper immersion, and to compensate for insulation thickness, with threaded connection for socket.
   4. External Calibration Device.
   5. Separable Socket:
      a. Water Service: Brass or bronze.

B. Vapor Tension or Gas Actuated Capillary Thermometers: Adjustable type, with micrometer type pointer or external calibration device, of design and materials as follows:
   1. Case and Ring: Stainless steel or non-ferrous material as approved, with clear acrylic or shatterproof glass lens. Provide case of type as required for the particular mounting application. Case adjustable, allowing rotation of 360°, and stem adjustment of at least 180°. Provide set screw for locking case in desired position.
   2. Movement: Brass with bronze bearings.
   3. Dial: White enamel background, with bold black graduations, numerals and pointer; 3-1/2 inch diameter.
   4. Capillary: Stainless steel.
   5. Bulb: Copper with union well connection.
   6. Separable Socket:
      a. Water Service: Brass or bronze.

2.04 THERMOMETERS FOR MEASURING AIR TEMPERATURE

A. Bimetallic Actuated Thermometers: Comply with ASME B40.3, Accuracy Grade A.
   1. Construction: Type 304 stainless steel, all welded construction, with clear acrylic plastic or shatterproof glass crystal.
   2. Dial: White enamel background with bold black figures and graduations.
   3. Head Size: 5 inch diameter.

4. Stem: Length as required for average duct cross sectional sensing of air temperature, and to compensate for insulation thickness.
5. External calibration device.

B. Vapor Tension or Gas Actuated Capillary Thermometers: Adjustable 3-1/2inch dial type, with micrometer type pointer or external calibration device, of design and materials as follows:
1. Case and Ring: Stainless steel or non-ferrous material as approved, with clear acrylic or shatterproof glass lens. Case adjustable allowing rotation of 360°, and stem adjustment of at least 180°. Provide set screw for locking case in desired position.
2. Movement: Brass with bronze bearings.
3. Dial: White enamel background, with bold black graduations, numerals and pointer; 3-1/2 inch diameter.
4. Capillary: Stainless steel.
5. Bulb: Copper air sensing bulb with split flange mounting device.

2.05 PRESSURE AND COMPOUND GAUGES

A. Type: Adjustable dial type with micrometer type pointer, or external calibration device, bronze bourdon tube, and bronze bushed rotary movement.

B. Dial: White enameled background, and bold black graduations, numerals and pointer; 3-1/2 inch diameter.
1. Scale Range:
a. Standard Gauges: Double normal operating pressure.
b. Compound Gauges: From 30" Hg vacuum to double normal operating pressure.

C. Case: Cast aluminum, brass, or black finished phenolic.

D. Accuracy: Guaranteed of within 1 percent in middle third of dial range.

2.06 PRESSURE SNUBBERS

A. Pressure Snubbers: H.O. Trerice Co. Model 872.

PART 3 EXECUTION

3.01 INSTALLATION

A. Thermometers:
1. Install in accordance with the manufacturer's printed installation instructions.
2. Install direct reading thermometers, when the application requires installation 6 feet or less above the floor or bottom of space in which installed, and remote reading type when the installation is over 6 feet.

B. Pressure and Vacuum Gauges:

1. Install in accordance with the manufacturer's printed installation instructions.
2. For Measuring Liquid Pressure: Install gauges complete with stop cocks and drain cocks.

C. Pressure Snubbers:
1. Install pressure snubbers in the piping connections to gauges installed in suction and discharge piping connections to close coupled and base mounted circulating pumps driven by motors under 10 HP.

END OF SECTION 232003

MP:xx

SECTION 232006

HYDRONIC SPECIALTIES

PART 1 GENERAL

1.01 SUBMITTALS

A. Product Data: Catalog sheets, specifications, and installation instructions for each item specified.

B. Contract Closeout Submittals:

1. Operation and Maintenance Data: Submit 2 copies to the Engineer incorporated within maintenance manuals, covering the installed products.

PART 2 PRODUCTS

2.01 ACCEPTABLE MANUFACTUERS

Taco
Bell & Gossett
Aurora Pumps

2.02 AIR VENTS

A. Type A: Manual Coin Operated Vent; ITT Bell and Gossett Model 4V.

1. Construction: Brass.
2. Maximum Working Pressure: 150 psig.
3. Maximum Operating Temperature: 212 degrees F.

B. Type B: Automatic Float Operated Vent; ITT Hoffman Model 78.

1. Construction: Brass body with stainless steel ball check, and 1/8 inch safety drain connection.
2. Maximum Working Pressure: 150 psig.
3. Maximum Operating Temperature: 250 degrees F.

C. Type C: Automatic High Capacity Float Operated Vent; Sarco Model 13W, or ITT Bell and Gossett Model 107.

1. Construction: Cast iron body with bolted and gasketed cover, and stainless steel float mechanism, and 3/8 inch drain connection.
2. Maximum Working Pressure: 150 psig.
3. Maximum Operating Temperature: 250 degrees F.

D. Type D: Automatic High Pressure Float Operated Vent; ITT Hoffman Model 792.

1. Construction: Cast iron body (30,000 psi tensile strength) with heat treated stainless steel internal parts, and stainless steel float.
2. Maximum Working Pressure: 250 psig.
3. Maximum Operating Temperature: 300 degrees F.
4. Maximum Hydrostatic Pressure: 350 psig.

2.03 CONVECTOR HOT WATER CONTROL VALVES

A. Provide Tour & Anderson, Honeywell-Braukmann or acceptable equal convector hot water control valve with the following features:

1. The valve body shall be nickel-plated brass construction with a maximum rating of 150 psi. The valve shall have an internally threaded inlet and an outlet with a union and threaded end connection.
2. The valve shall be provided with a fully in placeable packing gland, which can be replaced without shutting down system operation.
3. The valve disc shall be constructed of EPDM capable of withstanding 250ºF.
4. The valve operator shall be of the bellows design with either liquid or vapor charge. The operator shall be capable of temperature adjustment between 45ºF and 86ºF.
5. Provide a tamper-proof dial/operator and remote sensor consisting of an armored capillary tube sensor guard and tamper dial faceplate.

PART 3 EXECUTION

3.01 INSTALLATION

A. Install the work of this section in accordance with the manufacturer’s written instructions.

B. Manual Vent Valves: Install manual vent valves on each hydronic terminal at highest point, and on each hydronic piping drop in direction of flow for mains, branches, and runouts, and elsewhere as indicated.

C. Automatic Vent Valves: Install automatic vent valves at top of each hydronic riser and elsewhere indicated. Install shut off valve between riser and vent valve, pipe outlet to suitable plumbing drain, or as indicated.

D. Convection Hot Water Control Valves: Install the Work of this Section in accordance with the manufacturer's printed installation instructions.

END OF SECTION 232006

MP:xx

SECTION 233113

METAL DUCTWORK

PART 1 - GENERAL

1.01 REFERENCES

National Fire Protection Association (NFPA).
Sheet Metal and Air Conditioning Contractors National Association, Inc. (SMACNA) Current published edition.
American Conference of Governmental Industrial Hygienists (ACGIH).

1.02 SUBMITTALS

A. Fabrication Drawings: Submit 1/4" = 1'-0" (minimum) scaled reproducible drawings of metal ductwork and fittings including but not limited to: ductwork layout detailing, sizes, fabrication lengths, locations, elevations, slopes of horizontal runs. In addition, indicate wall and floor penetrations, lighting, diffuser, building walls, steel locations with elevations and reflected ceilings (ceiling type and elevations noted). Show interface and space relationships between all items located above ceiling including but not limited to ductwork and equipment. (Submission of Engineers contract document Drawings will not be acceptable).

B. Shop Drawings: Submit duct construction standards to include schedule of all ducted air systems (indicating pressure class, materials, and seal class), sheet metal type, connections, reinforcement, turning vanes, fitting types, method of support, upper hanger attachment, and duct liner specification.

1.03 QUALITY ASSURANCE

A. SMACNA: Gages of materials, fabrication, reinforcement, sealing requirements, installation, and method of supporting ductwork shall be in accordance with the following SMACNA manuals, unless otherwise shown and/or as specified:

1. HVAC Duct Construction Standards – Fourth Edition 2021.

B. Conform to the applicable requirements of NFPA 90A, 90B and 96.

PART 2 - PRODUCTS

2.01 MATERIALS

A. Galvanized Steel: ASTM A653 lock forming quality - galvanizing: ASTM A924 coating designation G-90.

B. Aluminum: ASTM B-209, Alloy 3003, Temper H-14.

C. Stainless Steel: AISI Types 302, 304 and 316, as specified.

D. Carbon steel: ASTM A568.

E. PVC Coated Galvanized Steel

2.02 FABRICATION

A. Fabricate all ductwork in accordance with this specification and SMACNA.

B. Fabricate all ductwork from galvanized, stainless steel, carbon steel, aluminum and PVC coated sheet metal as indicated.

C. Round and flat oval ductwork shall be fabricated using spiral seam construction only. Snaplock seams are not allowed

D. Rectangular and Round ductwork radius of all 90º through 45º elbows shall be 1.5 times the elbow diameter, unless otherwise noted. The radius of all 15º through 30º elbows shall be 1.0 times the elbow diameter. Mitered elbows shall be provided with turning vanes. Rectangular square throat 90º without turning vanes are not allowed.

E. Dissimilar Metals: Separate dissimilar metals used for ductwork with 10 oz. canvas impregnated with zinc chromate. No separation is required between screws or rivets and the materials in which they are inserted.

F. Sheet Metal:

1. Minimum Rectangular Duct Construction to 2" W.G. unless noted otherwise on the contract drawings. For pressure class above 2” refer to SMACNA standards tables.
2. All ductwork panels 18” and greater in width/height, 20 gage or less shall be cross broken or beaded. Internally lined ductwork is exempt from this requirement.
3. Duct construction: reinforcement, gages and sealing on fittings, elbows and short lengths of ductwork shall be continuous throughout the system.

Duct Dimension longest side	*Duct Length	Minimum Duct Gage	Transverse Joint Connection / Reinforcement
Up to 16"	48”	24	S-Slip & Drives (Min. 24 ga.)(c)
17" to 28"	48”	24	Flanged (a)(c)
29" to 36"	48”	24	Flanged (a)(c)
37" to 48"	48”	22	Flanged (a)(b)(c)(e)
48" to 84”	48”	20	Flanged (a)(b)(c)(e)
84” to 96”	48”	18	Flanged (a)(b)(c)(e)
97” to 108”	48”	16	Flanged (a)(b)(d)(e)

107” & UP	Refer to SMACNA Tables for pressure class specified

a. Flanged ductwork joint connections shall be: SMACNA T-22, T-24, T-24a, T25a, T25b or slip-on flanges. (IE: Ductmate, Ward, Nexus, TDH and TDF installed per manufacturer’s recommendations).
b. Intermediate reinforcement per SMACNA
c. Longitudinal seam to be Pittsburgh, (snaplock seams are not allowed).
d. Longitudinal seam to be welded.
e. Refer to SMACNA reinforcement tables for additional intermediate required reinforcements.

4. Round Duct Construction - Minimum duct wall thickness unreinforced 2" W.G. positive/negative pressure.

Duct Dimension	Spiral Seam
6”	28
8”	28
10”	28
12”	28
14”	28
16”	26
18”	26
19” - 26”	26
27” - 36”	24
37” - 50”	22
51” - 60”	20
61” - 84”	18

Round ductwork shall be a manufactured duct system consisting of fittings that are factory fitted with a sealing gasket and spiral duct which, when installed according to the manufacturer’s instructions, will seal the duct joints without the use of duct sealer. Round ductwork shall be fabricated using spiral seam construction. (Snaplock seams are not allowed). Acceptable Manufacturers: Lindab (SPIROsafe); Semco (Custom Air); United McGill Corporation (Uni-Gasket).

a. All fitting ends shall come factory equipped with a EPDM rubber gasket. Gasket shall be manufactured to gauge and flexibility so as to insure that system will meet all of the performance criteria. Gasket shall be classified by Underwriter’s Laboratories to conform to ASTM E84-91a and NFPA 90A flame spread and smoke developed ratings of 25/50.
b. Fitting ends shall be calibrated to dimensional tolerance standard of the associated spiral duct.
c. Fitting ends from 3” to 24” diameter shall have over edges for added strength and rigidity.

d. Elbows from 3” to 12” diameter shall be 2-piece die stamped and continuously stitch welded. All elbows 14” diameter and larger shall be standing seam gorelock construction and internally sealed.
e. The fittings shall be either spot-welded or button punched construction and shall be internally sealed. When contract documents require divided flow fittings, only full body fittings will be accepted.
f. Volume dampers as specified in 233300 - Ductwork Accessories.

5. Flat Oval Duct Construction – Minimum duct wall thickness unreinforced 2" W.G. positive/negative pressure.

Duct Width	Spiral Seam Duct Gage	Gage of Fitting
To 24"	24	20
25" to 36"	22	20
37" to 48"	22	18
49" to 60"	20	18
61" to 70"	20	16
71" to up	18	16

Flat Oval ductwork shall be fabricated using spiral seam construction. (Snaplock seams are not allowed). Acceptable Manufacturers: Lindab (SPIROsafe); Semco (Custom Air); United McGill Corporation (Uni-Gasket).

2.03 SUPPORT

A. Duct Hangers

1. Strap Hangers: As indicated below and/or same material as duct.
2. Rod Type Hangers: Mild low carbon steel, unless otherwise specified; fully threaded or threaded each end, with 2 removable nuts each end for positioning and locking rod in place. Unless stainless steel, galvanized or cadmium plated; shop coat with metal primer.

Maximum Half of Duct Perimeter	Strap @ 10 ft Spacing	Rod @ 10 ft Spacing	Strap @ 8 ft Spacing	Rod @ 8 ft Spacing	Strap @ 5 ft Spacing	Rod @ 5 ft Spacing	Strap @ 4 ft Spacing	Rod @ 4 ft Spacing
P/2 = 30"	1" x 22 ga	10 ga.	1" x 22 ga.	10 ga.	1" x 22 ga.	12 ga.	1" x 22 ga.	12 ga.

P/2 = 72"	1" x 18 ga	3/8"	1" x 20 ga.	1/4"	1" x 22 ga.	1/4"	1" x 22 ga.	1/4"
P/2 = 96"	1" x 16 ga	3/8"	1" x 18 ga	3/8"	1" x 20 ga	3/8"	1" x 22 ga	1/4"
P/2 = 120"	1 ½" x 16 ga	½"	1" x 16 ga	3/8"	1" x 18 ga	3/8"	1" x 20 ga	1/4"
P/2 = 168"	1 ½" x 16 ga	½"	1 ½" x 16 ga	½"	1" x 16 ga	3/8"	1" x 18 ga.	3/8"
P/2 = 192"	-	½"	1 ½" x 16 ga	½"	1" x 16 ga	3/8"	1" x 16 ga.	3/8"

B. Cable Hanging Systems (Gripple): Cable Hanging Systems with adjustable mechanical devices compliant with SMACNA shall consist of ready-to-use factory tested kit comprising of cable and cable end options. Crimps shall be Factory installed. All cable hanger products shall be certified as SMACNA and UL listed. All cable hangers shall have a minimum of 4:1 safety margin over the listed Safe Working Load (SWL).

C. Miscellaneous Fasteners and Upper Hanger Attachments (select from below as applicable):

1. Sheet Metal Screws, Machine Bolts and Nuts: Same material as duct, unless otherwise specified.
2. Concrete Inserts: Steel or malleable iron, galvanized; continuously slotted or individual inserts conforming with MSS SP-58, Types 18 & 19, Class A-B.
3. C Clamps: Fee & Mason Co.'s 255L with locking nut, and 255S with retaining strap.
4. Metal Deck Ceiling Bolts: B-Line Systems, Inc.'s Fig. B3019.
5. Welding Studs: Erico Fastening Systems, capacitor discharge, low carbon steel, copper flashed.
6. Structural (carbon) Steel Shapes and Steel Plates: ASTM A36, shop primed.
7. Stainless Steel Shapes and Plates: ASTM A276 and ASTM A666.
8. Machine Bolt Expansion Anchors:
   a. Non-calking single unit type: FS FF-S-325, Group II, Type 2, Class 2, Style 1.
   b. Non-calking double unit type: FS FF-S-325, Group II, Type 2, Class 2, Style 2.
   c. Self - drilling type: FS FF - S - 325, Group III, Types 1 and 2

2.04 SEALANTS

A. Acceptable Manufacturers: Duro Dyne Corp.; Foster Products Div., H.B. Fuller Co.; Hardcast Inc.; United Sheet Metal Div., United McGill Corp.

B. U.L. Listed adhesives (liquid or mastic), scrim, or combinations thereof, as required for pressure class; suitable for system operating temperatures; compatible with media conveyed within, insulation (if any), and ambient conditions.

C. Use of duct tape or silicone caulk for sealing seams and joints is not acceptable.

2.05 ACOUSTICAL DUCT LINING

A. Requirements of Regulatory Agencies:

1. The liner shall meet the Life Safety Standards as established by NFPA 90A and 90B and should not support microbial growth as tested in accordance with ASTM G21 and G22.
2. The duct liner shall conform with the requirements of ASTM C 1071 with NRC not less than 0.70 as tested per ASTM C423 using a Type "A" mounting, and with a thermal conductivity no higher than .25 at 75□F mean temperature.
3. Installation of duct lining shall be in accordance with the appropriate SMACNA Manual installation detail on drawing as amended by this Section.

B. Acceptable Manufacturers: Johns Manville Mechanical Insulations Linacoustic RC; or approved equal.

C. Materials

1. Duct Lining: Minimum 1½" thick fibrous glass, with the side exposed to the airstream coated with a tough, acrylic polymer to guard against incursion of dust or dirt into the substrate. The surface coating shall be specially formulated with an immobilized, EPA-registered anti-microbial agent so it will not support the growth of fungus or bacteria, as determined by test in accordance with ASTM C 1071 and ASTM G21 and G22. Edge coating shall be factory applied to assure coverage of the leading edges per SMACNA requirements. Material shall be a standard catalog item as furnished by a nationally recognized manufacturer.
2. Adhesive shall be approved by the duct liner manufacturer and shall meet ASTM C 916
3. Mechanical Fasteners: Furnish fasteners complete with weld pins and retaining clips for securing lining to ductwork. Weld pins shall not distort, mar or burn the ductwork. Acceptable Products: Graham Co. Weld Pins.
4. Sound Absorption Coefficients: Minimum acceptable coefficients as tested per ASTM C423-61 and ASTM E795

Product	Mounting	Octave Band (Hz)	NRC

Thickness	Type	125	250	500	1000	2000	4000	
1½”	"A"	0.1	0.47	0.85	1.01	1.02	0.99	.85

D. Installing Duct Lining in Low Velocity Ductwork

1. Install duct lining in accordance with SMACNA "Duct Manual and Sheet Metal Construction for Ventilating and Air Conditioning Systems”, except as specified otherwise herein and indicated on drawings.
2. Ductwork dimensions noted on the drawings are the inside duct dimensions after the application of lining.
3. Bond liner to ductwork with a 100% coverage of adhesive, with the factory coated liner surface facing the airstream. Start installation of fasteners within 3" of the leading edge of all transverse joints within upstream leading edge of duct lining. Refer to drawings for installation detail.
4. All exposed leading edges and transverse joints shall be neatly butted without gaps and be coated with factory-applied edge coating or field-applied factory approved edge treatment. Metal nosings shall be securely installed over transversely-oriented liner edges facing the airstream at forward discharge and at any point where lined duct is preceded by unlined duct. In addition, coat all exposed surfaces of mechanical fasteners and sheet metal nosing with vapor barrier mastic.

2.06 SEALING REQUIREMENTS

A. Sealing Requirements

1. Construct as a minimum to the following pressure and seal class.

System	Pressure Class	Seal Class
Supply, return and outside air duct	+2”	‘A’
Exhaust and relief duct	-2”	‘A’
Dishwasher exhaust	-4”	(a)
Fume hood exhaust	-4”	(b)

(a) Duct shall be rectangular aluminum duct commercial grade with liquid tight welded seams.
(b) Duct shall be 20 gauge AISI Type 316 stainless steel with liquid tight welded seams.

PART 3 - EXECUTION

3.01 INSTALLATION

A. Duct Cleanliness Construction Requirements
1. Duct fabrication, shop storage, transportation to site, site storage, and

installation, shall comply with SMACNA Duct Cleanliness Level B and additional requirements as indicated.

2. Site storage area shall be clean, dry and exposure to dust minimized.
3. Before installation of individual duct sections, they are to be inspected to ensure that they are free from all debris.
4. The internal surfaces of the uninsulated ductwork shall be wiped to remove excess dust immediately prior to installation.
5. Open ends on complete ductwork and overnight work-in-progress shall be sealed.

B. Install ductwork to allow maximum headroom. Properly seam, brace, stiffen, support and render ducts mechanically airtight. Adjust ducts to suit job conditions. Coordinate with all trades proposed locations of ductwork prior to installation.

C. Provide necessary transformation pieces and flexible fabric connections for ductwork connected to air handling equipment or air inlet and outlet devices.

D. All transitions shall be made with less than 30□ included angle.

E. Provide safing to properly close off all openings in ductwork or sleeves in which any duct accessory is being installed as required by irregular openings or off-size equipment. All attempts shall be made to maximize the size of the accessory to the opening or duct.

F. Ductwork installations exposed to view in finished spaces (refer to project documents) shall receive special attention by contractor. Care shall be taken to provide a neat uniform look, Round duct spiral seams shall align. Ductwork will be free of foreign matter (IE: construction debris, mud, dirt, excessive duct sealer, ETC.) Do not install damaged ductwork. Remove damaged ductwork at the direction of the engineer. Ductwork indicated to be painted (refer to project documents). Duct shall be wiped clean of grease, oils and any foreign materials not conducive to the adhering of paint.

G. Coordinate the installation of all mechanical systems. Provide sufficient space around ductwork and equipment during installation to allow the proper application of insulation. As needed insulate ducts prior to erection in place when ducts are required to be installed proximate to walls, ceilings, equipment or other ductwork, which will not permit adequate space for the installation of insulation, at a later date. Exercise reasonable care in the installation of insulated ductwork, so that insulated surfaces are in perfect condition before and after installation.

H. Ductwork seen behind registers, in other words; ductwork visible through a register (inside the duct) shall be painted using one coat of flat black metal paint (after proper surface cleaning). Paint coverage shall be that no unpainted duct will be seen. This applies to all grilles, registers and diffusers.

3.02 SEALING SEAMS, JOINTS, AND PENETRATIONS

A. Conform to SMACNA Seal Class A as a minimum regardless of pressure class except for continuously welded or soldered seams, where called for. Helical

(spiral) lock seams are exempt from sealant requirements. All other duct surface connections made on the perimeter of the duct are deemed to be joints. Use of duct tape for sealing of seams and joints is not acceptable.

B. Sealing requirements shall include, but not be limited to: transverse (girth) joints; longitudinal seams; duct wall penetrations; branch and sub-branch intersections; duct collar tap-ins; fitting subsections; louver and air terminal connections to ducts; access door and access panel frames and jambs; duct, plenum and casing abutments to building structures.

C. Pittsburgh sealing, sealant shall be applied in the Pittsburgh pocket prior to hammering. Sealant applied to the interior (back side of seam) of duct or to the exterior of seam is unacceptable.

D. Ducts and plenums connecting to louvers (intake, exhaust, relief) shall be constructed with the bottom of duct/plenum sloped so that water drains back and out of the louver or to a central drain connection within the plenum. If a drain connection is provided, pipe to nearest floor drain. The duct or plenum shall be sealed as directed in 3.02, A (above). In addition, all seams of lower 6" (or greater, if higher water level potential exists) shall be soldered, or otherwise gasketed and sealed to create water-tight seams, joints and penetrations.

3.03 DUCT MATERIAL INSTALLATION SCHEDULE

A. Fabricate supply, return, exhaust, and outside air ductwork from galvanized sheet metal except as described below:

B. Fabricate the following ductwork from aluminum:

1. Inlet and discharge ductwork connected to cooling towers and evaporative condensers.
2. Exhaust ductwork from dishwashers, scullery equipment hoods, showers, locker rooms and swimming pool areas.

3.04 ACOUSTICAL DUCT LINING

A. In all locations indicated on drawings.

B. Install duct lining the final ten feet from the inlet side of exhaust fans (excluding grease ducts & laboratory fume hood exhaust.)

C. Install duct lining from the horizontal ceiling heat pump discharge to the first branch runout or 15 feet.

D. Install duct lining in the return air ductwork from the horizontal ceiling heat pump to the nearest branch runout or 15 feet.

E. Install duct lining ten feet down stream of the variable air volume boxes.

3.05 HANGERS FOR DUCTS

A. Install hangers for ducts as specified in the SMACNA Manual, with the following exceptions:

1. Rectangular ducts up to 42 inches wide, not having welded or soldered seams, and supported from overhead construction; extend strap hangers down over each side of the duct and turn under bottom of duct a minimum of 2 inches. Secure hanger to duct with 3 full thread sheet metal screws, one in the bottom and 2 in the side of the duct.
2. Prime coat plain steel rods threaded at the site immediately after installation with metal primer.

3.06 UPPER HANGER ATTACHMENTS

A. General: Secure upper hanger attachments to structural steel or steel bar joists wherever possible.

1. Avoid damage to reinforcing members in concrete construction.
2. Metallic fasteners installed with electrically operated or powder driven tools may be used as upper hanger attachments, in accordance with the SMACNA Manual.

B. Prohibited Use

1. Drive-on beam clamps (caddy clamp), flat bars or bent rods, as upper hanger attachments.
2. Powder driven drive pins or expansion nails.
3. Powder driven or welded studs to structural steel less than 3/16 inch thick.
4. Loads in excess of 250 lbs from a single welded or powder driven stud.
5. Powder driven fasteners in precast concrete.
6. Do not use c-clamps to attach hangers in a shear type application. Use sheet metal screws, machine bolts and nuts or welds.

C. Attachment to Steel Frame Construction: Provide intermediate structural steel members where required by ductwork support spacing. Select steel members for use as intermediate supports based on a minimum safety factor of 5.

1. Secure upper hanger attachments to steel bar joists at panel points of joists.
2. Do not drill holes in main structural steel members.

D. Attachment to Concrete Filled Steel Decks:

1. Existing Construction: Install expansion shields.
2. New Construction: Install concrete inserts or metal deck ceiling bolts.
3. Do not attach hangers to decks less than 2-1/2 inches thick.

3.07 DUCT RISER SUPPORTS

A. Support vertical round ducts by means of double-ended split steel pipe riser

clamps bearing on floor slabs or adjacent structural members, at every other floor through which the riser passes.

B. Unless otherwise specified or shown on the drawings, support vertical rectangular ducts by means of two steel angles, secured to duct and resting on floor slab or adjacent structural steel member, at every other floor through which the duct passes. Size supports as follows:

Max. Side Dimension (Inches)	Support Angle (Inches)	Secure to Duct with	Min. Bearing at Each End (Inches)
36	1 x 1 x c	Screws	2
48	1½ x 1½ x c	Bolts	3

3.08 OPENINGS THROUGH FIRE RATED WALLS & FLOORS NOT REQUIRING FIRE DAMPERS

A. Unless otherwise specified, size holes thru floors and walls in accordance with the through penetration fire stopping system being used.

B. Use through-penetration firestop devices, forming materials, and fill, void or cavity materials to form through-penetration firestops to prevent the passage of flame, smoke, fumes, and hot gasses as detailed in the UL Fire Resistance Directory, Warnock Hersey Certification Listings Book, or the Omega Point Laboratories Listings Directory. Where applicable design is not detailed in the Directories, use forming materials and fill, void or cavity material to form appropriate through-penetration firestop in accordance with printed details and installation instructions from the Company producing the approved forming materials and fill, void or cavity material.

C. Fill the annular space between the duct and the rated construction (both sides of the rated construction) with a non-hardening, intumescent, UL listed firestop product; and in the absence of manufacturer's firestop system installation instructions or Engineer's recommendation, attach 1½" angles around the perimeter of all ducts (both sides of the rated construction).

D. Firestop through-penetration of floors, walls, partitions, ceilings, and roofs in accordance with the fire resistance rating assigned to the walls, partitions, floors, ceilings, and roofs on the General and Mechanical Construction Drawings.

END OF SECTION 233113

MP:xx

SECTION 233300

DUCTWORK ACCESSORIES

PART 1 - GENERAL

1.01 REFERENCES

ACGIH: American Conference of Governmental Industrial Hygienists.
NFPA: National Fire Protection Association.
SMACNA: Sheet Metal and Air Conditioning Contractors National Association, Inc.
UL: Underwriters Laboratories, Inc.

1.02 SUBMITTALS

A. Product Data: Manufacturer's catalog sheets, diagrams, standard schematic drawings, and installation instructions for each manufactured product. Submit SMACNA Figure Numbers for each shop fabricated item.

1.03 QUALITY ASSURANCE

A. Regulatory Requirements: Unless otherwise shown or specified, comply with the applicable requirements of the following:

1. SMACNA: Gages of materials, fabrication, sealing, and installation shall be in accordance with the HVAC Duct Construction Standards Manual.
2. NFPA: Standards No.'s 90A, 90B, 91, 96, and 101.
3. UL: Standards No. UL181, UL555, and UL555S. Use Ul181 for flexible duct; Ul555 for fire dampers; Ul555S for combination fire/smoke damper
4. ACGIH: Follow the Hood Design Data, and Construction Guidelines for Local Exhaust Systems from the Industrial Ventilation Manual.

PART 2 - PRODUCTS

2.01 ROUND DUCT TAKE-OFFS / VOLUME DAMPERS

A. Heavy Duty Bell Mouth Take-off: Air tight 24 ga. galvanized (G-90) gasketed bell mouthed, 22 ga. galvanized single blade damper, 3/8" solid bar shaft, indication / operation handle with locking hex nut and Tekline regulator. On insulated ducts, quadrant to be mounted on hat channel; channel height equal to exterior duct insulation thickness. Provide bearings at both ends of operating shaft. (Provide a 45 deg. take-off when the flange diameter of the bell mouth fitting exceeds the height of the duct main. Also provide a 45 deg. take-off were indicated on the drawings.) (Contractor fabricated dampers not acceptable).

B. For Spiral Duct: Volume dampers shall be fitting sized to slip into spiral duct as manufactured by Lindab or equal. Damper shall have the following features (Contractor fabricated dampers not acceptable):

1. Gasketed duct connections compatible with round ductwork system as specified in 233113 Metal Ductwork.
2. Locking quadrant with blade position indicator.
3. 2” sheet metal insulation stand-off.
4. Integral shaft/blade assembly.
5. Shaft mounted, load bearing bushings.
6. Gasketed shaft penetrations to minimize air leakage.

2.02 DAMPERS

A. Volume Control Dampers: Opposed blade type, frames of all welded construction utilizing channel iron members in galvanized steel ducts, extruded members in aluminum ducts and stainless steel in stainless steel ducts. Fabricate frames of 2 inch wide x 1/2 inch legs x 1/8 inch thick (minimum) members for dampers less than 10 sq ft in size and 2 inch wide x 1 inch leg x 1/8 inch thick (minimum) for larger sizes. Fabricate blades from No. 16 gage (minimum) metal, of same material as duct in which installed, with 3 horizontal grooves, 2 turned edges and trunnions mounted in brass sleeve or ball bearings. Space bearings on maximum 48 inch centers. Single blade dampers are unacceptable for ducts over 11 inches in height. Weld motor mounting bracket to damper frame, for pneumatic or electric motor operated dampers.

B. Parallel Blade Dampers: Furnish with 2 inch wide x 1/2 inch leg x 1/8 inch thick metal frames of all welded construction, utilizing channel iron members in steel ducts and extruded aluminum members in aluminum ducts. Fabricate blades from No. 16 gage (minimum) metal, of same material as duct in which installed, with horizontal reinforcing grooves, 2 turned edges and trunnions mounted in bronze sleeve or ball bearings. Single blade dampers are unacceptable for ducts over 11 inches in height. Fabricate dampers of steel for installation in wall openings and for use on discharge side of exhaust fans. Weld motor mounting bracket to damper frame, for pneumatic or electric motor operated dampers. Shop coat raw ferrous parts of damper assemblies with corrosion resistant paint. Dampers used on outside air and exhaust applications shall have stainless steel edge seals and vinyl blade edge seals to for a maximum leakage rating of 20 cfm per sq.ft. of face area at 4" water gauge differential static pressure. Use when dampers are required to be installed in wall openings for outside air inlet or make-up air use and are interlocked with exhaust fans. Avoid product duplication when a temperature control section is included in specifications.

C. Outside air, Relief air and Exhaust air: Dampers used on outside air and exhaust applications shall be insulated with thermally broken frame. Frame and blade edge seals shall be extruded silicone secured in an integral slot within the aluminum frame/blade extrusions and shall be mechanically fastened. Dampers shall be AMCA rated for Leakage Class 1A at 1" water gauge differential static pressure. Linkage hardware shall be aluminum and corrosion-resistant zinc-plated steel, installed in the frame side, out of the airstream, and accessible after installation. Linkage hardware shall be complete with cup-point trunnion screws to prevent linkage slippage and a Celcon bearing between moving parts to reduce wear and increase longevity. Linkage that consists of metal rubbing metal will not be approved; Tamco Series 9000 BF, or approved equal.

D. Splitter Dampers: Fabricate dampers of same material as duct in which installed, with rolled or hemmed edges. Provide blades in ducts having a maximum side dimension under 24 inches of same gage as duct, and in ducts having a maximum side dimension 24 inches and over provide blades 2 gages heavier than duct.

E. Fire Dampers; Static Systems:

1. Provide UL 555 Classified and Labeled "Fire Resistance Rating 1-1/2 hr".
2. Fire damper to be Type B, Blades out of the air stream.
3. Frame to be one piece roll-formed 22Ga. galvanized steel.
4. Blades to be 22 Ga. galvanized steel, curtain type.
5. Provide damper with replaceable 165° F. fusible link.
6. Provide with closure springs for both horizontal and vertically installed fire dampers
7. Provide damper with the following options:
   a. Factory supplied sleeves
   b. **Electro-thermal link**
   c. **Type 304 stainless steel construction**
8. Design Manufacturer: Air Balance, Model 119B.

F. Fire Dampers, Dynamic Systems, Maximum size of 24x24 Horizontal or 36x36 Vertical:

1. Provide UL 555 Classified and Labeled with the following (but not limited to):
   a. Fire Damper, 1-1/2 hr fire resistance rating.
   b. For use in dynamic systems.
   c. Maximum rated air flow and pressure difference across damper.
   d. Directional arrow indicating air flow.
   e. Mounting position (horizontal or vertical, or both).
2. Fire damper to be Type B, Blades out of the air stream.
3. Frame to be one piece roll-formed 22Ga. galvanized steel.
4. Blades to be 22 Ga. galvanized steel, curtain type.
5. Provide damper with replaceable 165° F. fusible link.
6. Provide with closure springs for both horizontal and vertically installed fire dampers
7. Provide damper with the following options:
   a. Factory supplied sleeves
   b. **Electro-thermal link**
   c. **Type 304 stainless steel construction**
8. Design Manufacturer: Air Balance, Model D19B.

G. Fire Dampers, Dynamic Systems, Larger than 24x24 Horizontal or 36x36 Vertical:

1. Provide UL 555 Classified and Labeled with the following (but not limited to):
   a. Fire Damper, 1-1/2 hr fire resistance rating.
   b. For use in dynamic systems.

c. Maximum rated air flow and pressure difference across damper.
d. Directional arrow indicating air flow.
e. Mounting position (horizontal or vertical, or both).

2. Fire damper to be blade type
3. Frame to be 5-1/2" x 7/8" x 16 Ga. galvanized steel.
4. Blades to be 16 Ga. galvanized steel, 6" nominal width, parallel action.
5. Axles to be square, plated solid steel.
6. Bearing to be oil impregnated bronze.
7. Linkage to be plated steel angle and crank plates with stainless steel pivots, in-jamb type.
8. Stops to be 18 Ga. galvanized steel at head and sill.
9. Jamb seals to be stainless steel.
10. Provide damper with non-motorized spring closure mechanism with replaceable 165 Deg. F. fusible link.
11. Provide damper with the following options:
    a. Factory supplied sleeves
    b. **Type C housing for round or oval ductwork**
    c. **Type 304 stainless steel construction**
12. Design Manufacturer: Air Balance, Model MD19.

H. Ceiling Rated Dampers:

1. Provide UL Classified and Labeled dampers in accordance with UL-263 matching the fire resistance rating of the ceiling assembly.
2. Frame to be one piece rollformed 22Ga. galvanized steel.
3. Blades to be 22 Ga. galvanized steel.
4. Provide damper with replaceable 165 Deg. F. fusible link.
5. Closure springs to be extension type.
6. Provide damper with the following options:
    a. Thermal blanket, ¼" thick ceramic fiber.
7. Design Manufacturer: Air Balance, Model 289 for rectangular, Model 297 for round.

I. Manual Damper Regulators:

1. For Dampers Installed in Exposed, or Accessible Concealed Ductwork: Indicating quadrant with heavy metal handle and means for locking damper in all positions. On insulated ducts, quadrant to be mounted on hat channel; channel height equal to exterior duct insulation thickness. Provide bearings at both ends of operating shaft.
2. For Dampers Installed in Inaccessible Concealed Ductwork: Concealed type with indicating regulator in cast metal box with cover plate. Furnish assembly complete with duct and bearing, adjustment coupling, damper extension rods and minimum of 2 keys or socket wrenches for each type of damper adjustment screw or device. On insulated ducts, quadrant to be mounted on hat channel; channel height equal to insulation thickness. Provide bearings at both ends of operating shaft

J. Adjustable Vane Damper Assembly: Factory fabricated assemblies of same material as ductwork in which installed. Design assembly so either half of each blade may be adjusted independently, with blades held in position by friction

pins. Install damper unit in collar gasketed with heavy felt. Design assembly to facilitate positive volume control and uniform air distribution over entire outlet.

K. Combination Fire and Smoke Dampers and Smoke Dampers

1. Air Balance Model FS2 250 or acceptable equal.
2. Construction Features
   a. Fabricate in accord with National Fire Protection Association.
   b. Labeled and inspected by Underwriters Laboratories, Inc.
   c. Fire resistance rating of 1-1/2 hour rated per UL Standard 555
   d. Leakage rated damper for use in smoke control systems, with a Class II/250 degree F per UL Standard 555S.
   e. Blades-16 gauge channel.
   f. 20 gauge galvanized steel sleeve (20" long).
   g. Axles-1/2" square, plated solid steel stub.
   h. Bearings-oil impregnated bronze.
   i. Linkage-fixed type in air stream.
   j. Stops-18 gauge galvanized steel.
   k. Blade Edge Seals-silicone rubber.
   l. 120 VAC Electric Actuator. Coordinate with existing fire alarm system.
   m. Dual position indication switches.
   n. Damper shall be Normally Closed.
3. Installation
   a. Install at all locations shown on drawings.
   b. Install access doors at all locations.

2.03 TURNING VANE ASSEMBLIES

A. Fabricate vane assemblies of same material as ductwork in which installed. Provide individual hollow airfoil type vanes, rigidly connected to vane rails, with rails welded, screwed, or riveted to the ductwork.

2.04 FLEXIBLE CONNECTIONS - FABRIC

A. Glass fabric coated with an inorganic elastomeric material, similar to Duro Dyne's Thermafab.

B. Factory pre-fabricated pre-assembled flexible connectors of fabric specified in A. above with minimum No. 24 USS gage metal edges similar to Duro Dyne's Metal-Fab or Super Metal-Fab as required for free fabric length.

2.05 GASKET MATERIAL

A. Registers, grilles and diffusers installed in exposed uninsulated ductwork: 1/4 inch thick felt or sponge rubber material, of width as required by the flange on the particular device.

B. Flanged joints in ducts: 1/8 inch thick reinforced inert plastic of the self-conforming type, of same width as flange.

2.06 FLEXIBLE DUCT

A. Conform with NFPA 90A, and UL 181, Class I (minimum R-6):

1. Un-insulated: Dual element construction consisting of a corrosion resistant metal support spiral, mechanically locked to reinforced coated glass fabric, conforming to NFPA Standard 90A.
2. Pre-insulated: CertainTeed's Certaflex Punchline 25; Owens-Corning's INL-25; Wiremold WCK.
3. Flexible ductwork installed in unconditioned spaces shall be minimum R-8. Refer to 230713 Duct insulation.

2.07 FLEXIBLE DUCT CLAMP

A. Heavy duty Nylon Tie Anti-slip strap body tie, ribbed and stippled to prevent axial and lateral movement. Natural heat stabilized 6.6 nylon, high tensile strength which meets or exceeds industry and military standards (MIL-S-23190E). Temperature ratings 185 de. F max, -40 deg. F min. Positive grip locking anti-spring back tip: stainless steel (316) barb, infinitely adjustable strap. Shall be installed for a tight secure fit utilizing the manufacturer’s installation tool. Manufacturer Panduit or equal.

B. Stainless steel clamp: 9/16" wide band, plated 5/16" Hex head swivel action screw and bridge. Worm drive swivel action.

2.08 DUCT ACCESS DOORS

A. Fabricate minimum 16 x 16 inch size, or duct size by 16" for ducts less than 16" in width, of same material and finish as duct unless otherwise shown or specified.

1. For uninsulated duct designed for under 2 inches w.g.: Fabricate single panel door of same gage as duct, with all edges folded, size door to overlap opening perimeter by one inch.
2. Provide door with a minimum of 4 sash locks, Ventfabrics, Inc. Ventlock No. 260 or Duro Dyne Corp. Code No. SP Series. Sash Locks shall be galvanized, cadmium plated, or aluminized steel or cast aluminum.
3. For insulated duct and duct designed for 2 inches w.g. and over: Fabricate hollow metal doors in accordance with the SMACNA Manual. Fill void in doors for insulated duct with thermally equivalent insulation.
4. Provide doors with a 3/4 inch wide gasket and duct sealer around all 4 sides of duct opening at joint of access door frame and duct.

2.09 PLENUM ACCESS DOORS

A. Fabricate minimum 24" x 36" inch size, of same material and finish as plenum unless otherwise shown. Fabricate doors in accordance with the SMACNA Manual.

B. Door design shall be minimum rating of 4.5" w.g.: Fabricate door frame of .060 aluminum extrusion with 1-1/4" wide flange, double layer door panel of 18 ga. galvanized steel (G-90) with .060 aluminum extrusion frame, fill void in door with

1" thick fiberglass insulation.

C. Provide door with continuous type aluminum hinge.

D. Provide 2 locking door latches: Ventfabrics, Inc., Ventlock No. 260 or Duro Dyne Corp. Code No. SP Series.

E. Provide door with a 3/4 inch wide foam rubber gasket.

F. Provide view port: minimum 8x8 plexiglass window.

2.10 DUCT MOUNTED SMOKE AND CARBON MONOXIDE DETECTORS

A. Furnished by electrical contractor. Installed by HVAC contractor. Wired by electrical contractor. Coordinate locations with electrical contractor.

2.11 ROOF CURB FOR DUCT PENETRATIONS NOT DIRECTLY CONNECTED TO FANS

A. Factory fabricated, double shell, aluminum, a minimum of 2" thick, insulated with mineral wool, or thermally equivalent insulation as approved. Fabricate curbs from minimum No. 18 gage aluminum, properly braced and stiffened to form a rigid weatherproof unit. Curbs shall be a minimum of 12" high.

PART 3 – EXECUTION

3.01 INSTALLATION - GENERAL

A. Install ductwork accessories in accordance with manufacturer's installation instructions, with applicable portions of details of construction as shown in SMACNA standards, and in accordance with recognized industry practices to ensure that products serve intended function.

B. Install manual volume control dampers in all branch ducts and take-offs.

B. Coordinate with other work, including ductwork, as necessary to interface installation of ductwork accessories properly with other work.

3.02 TURNING VANES

A. Install turning vanes in all rectangular, round and oval square duct construction with 90° elbows and elsewhere as indicated. Small vanes shall be installed in ducts 29” wide and smaller; larger vanes shall be installed in ducts 30” and larger.

3.03 FLEXIBLE FABRIC CONNECTORS (Installation)

A. Make ductwork connections to air handling equipment with flexible fabric connectors. Install connectors with sufficient slack to prevent vibration transmission.

B. Free Fabric Length: Install fabric connectors a minimum of 3 inches in length for ducts having a maximum diameter of 18 inches, or maximum side dimension of 30 inches, and a minimum of 5 inches in length for duct diameters over 18 inches or side dimensions over 30 inches.

C. Secure fabric connectors to fans, casings and ducts as follows:

1. Secure round connectors with No. 12 USS gage x 1 inch wide galvanized steel draw bands. Secure bands with bolts and nuts.
2. Secure rectangular connectors with 1 inch x 1/8 inch thick flat galvanized steel bars, with screws or bolts on maximum 8 inch centers, or with approved sheet metal slip joints. Tightly crimp fabric into sheet metal joint and secure complete joint with sheet metal screws on maximum 6 inch centers.

D. Fabric connectors may be factory pre-fabricated pre-assembled units, with minimum No. 24 USS gage metal edges, secured to fabric with double lock seams.

E. Do not paint fabric connectors.

3.04 ACCESS DOORS

A. Install gasketed access doors in ductwork for each motor operated damper, manually operated volume control device, smoke damper, fire damper, smoke detector, in duct heating coil and at all locations where operating parts of any kind are installed and require access and elsewhere as indicated. Access doors are not required, where a manually operated damper has an exposed damper regulator, with an indicating quadrant.

B. Install access door accessible to service personnel, providing clear use of the door entire opening, positioned in the ductwork providing servicing of the entire fire damper with-in the duct. Access door shall not be blocked by any obstructions (i.e.: pipe, conduit, other ductwork, etc).

C. Access doors provided to access fire dampers and smoke dampers shall be labeled with 1/2" tall letters (black paint) “FIRE DAMPER”, “SMOKE DAMPER” OR “FIRE/SMOKE DAMPER”. In situations where text does not fit use FD, SD or FD/SD.

3.05 CONCEALED DAMPER REGULATORS

A. Imbed box in, and secure to back-up construction in ceiling or wall, so cover plate is flush with final surface.

3.06 FLEXIBLE DUCT

A. Install flexible duct as per manufacturer's instructions. Provide intermediate support along horizontal runs to avoid excessive sagging. Maximum extended length to be 36".

B. Secure each end of inner fabric of flexible duct to diffuser and ductwork with a flexible duct clamp. Secure each end of outer jacket with a flexible duct clamp independently of inner duct clamp. Nylon or Stainless steel.

3.07 FIELD QUALITY CONTROL

A. Operate installed ductwork accessories to demonstrate compliance with requirements. Test for air leakage while system is operating. Repair or replace faulty accessories, as required to obtain proper operation and leakproof performance.

3.08 ADJUSTING AND CLEANING

A. Adjusting: Adjust ductwork accessories for proper settings, install fusible links in fire dampers and adjust for proper action.

B. Label access doors after cleaning in accordance with Division-23 section "Mechanical Identification" and with NFPA 90A.

C. Final positioning of manual dampers is specified in Division-23 section "Testing, Adjusting, and Balancing".

D. Cleaning: Clean factory-finished surfaces. Repair any marred or scratched surfaces with manufacturer's touch-up paint.

3.09 CEILING RATED DAMPER INSTALLATION

A. The radiation damper shall completely fill the neck of the register or diffuser. Provide thermal blankets to cover the top of the register or diffuser up to and including the balancing damper. Provide addition wire support of the ceiling grid, register or diffuser as required at all four corners of the diffuser or register. Installation of assembly shall result in a U.L. and manufacturer approved installation.

B. Secure each end of inner fabric of flexible duct to diffuser and ductwork with a Stainless steel flexible duct clamp. Secure each end of outer jacket with a Stainless steel flexible duct clamp.

3.10 EXTRA STOCK

A. Furnish extra fusible links to Owner, one link for every 10 installed of each temperature range; obtain receipt.

END OF SECTION 233300

MP:xx

SECTION 233417

CEILING EXHAUST FANS

PART 1 - GENERAL

1.01 SUBMITTALS

A. Product Data: Catalog sheets, specifications and installation instructions for each fan.

1.02 QUALITY ASSURANCE

A. Fans shall be U.L. listed and labeled.

B. Regulatory Requirements:

1. Sound Power Level: AMCA Standard 300-67.

PART 2 - PRODUCTS

2.01 MANUFACTURERS/COMPANIES

Brod & McClung - Pace Co.
PennBarry Ventilator Co., Inc.

2.02 FAN

A. General: Fans shall be of the electric motor driven centrifugal type, installed in an insulated sheet steel unit casing with a decorative air intake grille, slow speed electric motor, electric terminal box inside housing, speed controller and outside wall cap.

B. Fan Assembly: True centrifugal wheels, mounted on the extended shaft of an electric motor. Fabricate fan scroll from heavy gage sheet steel with a corrosion resistant coating. Isolate the entire fan assembly from the unit casing with elastomer type vibration eliminators. Fan assembly shall be easily removable from the unit casing.

C. Unit Casing: Fabricate from heavy gage sheet steel, with a corrosion resistant coating. Acoustically line the interior surfaces of the casing with fibrous glass, coated on the exposed side. Provide discharge outlet complete with backdraft damper.

D. Electric Motor: Low speed (1200 RPM or below), with built-in thermal overload protection, designed to operate on 120 volt, 60 cycle, 1 phase service. Assembly shall be complete with flexible electric cord, plug and electrical receptacle inside housing. Suitably grounded fan motor.

E. Inlet Air Grille:

1. Aluminum: Etched and coated with clear acrylic lacquer.
2. Steel: Primed and finished with baked-on white enamel.
3. Plastic: White of the egg crate design.

F. Speed Control: Solid state circuitry, with polished chromium plated wall plate, suitable for use with standard electrical wall box.

G. Wall Cap: Polished aluminum, with built-in backdraft damper.

PART 3 - EXECUTION

3.01 INSTALLATION

A. Install fans and accessories in complete accordance with the manufacturer's printed installation instructions and the requirements of the Contract Documents.

END OF SECTION 233417

MP:xx

SECTION 233713

DIFFUSERS, REGISTERS, AND GRILLES

PART 1 - GENERAL

1.01 RELATED DOCUMENTS

A. Drawings and general provisions of the Contract, including General and Supplementary Conditions and other Division 1 Specification Sections, apply to this Section.

1.02 RELATED WORK SPECIFIED ELSEWHERE

Metal Ductwork: Section 233113

1.03 REFERENCES

NFPA: National Fire Protection Association.
SMACNA: Sheet Metal and Air Conditioning (Sub)Contractors National Association, Inc.
UL: Underwriters Laboratories, Inc.

1.04 SUBMITTALS

A. Product Data: Manufacturer's catalog sheets, diagrams, standard schematic drawings, and installation instructions for each manufactured product. Submit SMACNA Figure Numbers for each shop fabricated item.

B. Provide a room schedule, to include: listing of all rooms (room name or number), equipment identification tag, CFM, face and inlet neck size, quantity required and corresponding manufacturers' model number.

C. Samples: When requested by the Engineer, submit one complete unit for each type of proposed air inlet and outlet device. Approved samples will be delivered to the job site for installation.

1.05 QUALITY ASSURANCE

A. Regulatory Requirements:

1. Unless otherwise shown or specified, comply with the applicable requirements of the following:
   a. SMACNA: Gages of materials, fabrication, sealing, and installation shall be in accordance with the HVAC Duct Construction Standards Manual.
   b. NFPA: Standards No.'s 90A, 90B, 91, 96, and 101.
   c. UL: Standards No. UL555.

PART 2 - PRODUCTS

2.01 ACCEPTABLE MANUFACTURERS

Nailor Industries, Inc.
Carnes
Metalaire
Titus
Tuttle

2.02 GRILLES AND REGISTERS

A. Fabricate grille and register faces, and frames installed in shower rooms, locker rooms, toilet rooms, can washing, dishwasher, food serving, and kitchens of aluminum with an etched and acrylic coated finish.

B. Unless otherwise specified, fabricate all other grille and register faces, and frames of steel with factory applied finish as follows:

1. Prime coat for installation in walls and gypsum board, hard plaster or acoustic plaster ceilings specified to be painted.
2. Baked-on white enamel for installation in splined acoustic ceilings, metal pan ceilings and suspended lay-in tile ceilings.

C. Provide frames for each grille and register except as follows:

1. Grilles and registers installed directly in exposed uninsulated ductwork.
2. Grilles or registers designed for installation in suspended lay-in tile ceilings or suspended combination lay-in and splined tile grid ceilings.
3. Grilles or registers installed in gypsum board walls or ceilings.
4. Grilles or registers installed in metal pan ceilings.

D. Exhaust or Return Grilles: Fixed 40 degree or 45 degree single deflection type, consisting of a heavy formed face with face bars on nominal 0.66 inch or 0.75 inch centers, installed in a No. 20 gage frame of same material as bars.

1. Sidewall grilles shall have horizontal face bars.
2. Manufacturers:
   a. Carnes Model #RSLAH (Steel), #RALAH (Aluminum);
   b. Anemostat Model #S3HD (Steel), #X35VD (Aluminum);
   c. Titus Model #350 RL (Steel), #350FL (Aluminum);
   d. Tuttle & Bailey #T70D (Steel), #A70D (Aluminum).

E. Supply Registers:

1. Face: Adjustable double deflection type, consisting of a heavy formed face, with rear bars or vanes installed in a No. 20 gage frame, of same material as bars or vanes, with face and rear bars or vanes on nominal 0.66 inch or 0.75 inch centers; individually adjustable and front pivoting to any desired setting, by means of a key. Furnish one adjustment key per every 5 registers.
2. Damper Assembly: Opposed multi-blade type, consisting of frame,

blades, and key operated movement of the locking type, with operator projecting through frame. Furnish operators which are removable or permanently secured in place, as directed. Fabricate damper assemblies for use with aluminum or stainless steel register faces of aluminum with an etched or acrylic coated finish, and for use with factory painted register faces, or equivalent finish as approved by the Engineer.

3. Manufacturers:
   a. Carnes Model #RTDAV (Steel), #RNDAV (Aluminum);
   b. Anemostat Model #S2VO (Steel), #X2VO (Aluminum);
   c. Titus Model #300RS5 (Steel), #300FS5 (Aluminum);
   d. Tuttle Model #T647 (Steel), #A647 (Aluminum).

F. Exhaust or Return Registers:

1. Face: Fixed 40 degree or 45 degree fixed single deflection type, consisting of a heavy formed face with face bars on nominal 0.66 inch or 0.75 inch centers, installed in a No. 20 gage frame, of same material as bars.
   a. Sidewall registers shall have horizontal face bars.
2. Damper Assembly: Opposed multi-blade type, consisting of frame, blades and key operated movement of the locking type, with operator projecting through frame. Furnish operators which are removable or permanently secured in place, as directed. Fabricate damper assemblies for use with aluminum or stainless steel register faces of aluminum with an etched or acrylic coated finish, and for use with factory painted register faces, or equivalent finish acceptable to the Engineer.
3. Acceptable Manufacturers:
   a. Carnes Model #RTLAH (Steel), #RNLAH (Aluminum);
   b. Anemostat Model #S35HOD (Steel), #X35VOD (Aluminum);
   c. Titus Model #350RL5 (Steel), #350FL5 (Aluminum);
   d. Tuttle Model #T77D (Steel), #A77D (Aluminum).

G. Linear Return Register:

1. Extruded aluminum linear grille, 3" wide with c" blades on ¼" centers in extruded aluminum frame with 1" flange. Grille shall be designed for installation in a sidewall application with spring-clip retainers. Blades shall be designed for 0□ deflection. Finish to be brushed aluminum.
2. Damper Assembly: Opposed multi-blade type, consisting of frame, blades and key operated movement of the locking type, with operator projecting through frame. Furnish operators which are removable or permanently secured in place, as directed. Fabricate damper assemblies for use with aluminum or stainless steel register faces of aluminum with an etched or acrylic coated finish, and for use with factory painted register faces, or equivalent finish as approved by the Engineer.
3. Manufacturer: Carnes Model #CTQBD.

H. Frames for Registers and Grilles:

1. Fabricated from a minimum of No. 20 USS gage stamped or rolled steel, or extruded aluminum, to match material and finish of mating grille or register face. Exposed joints shall be welded and ground flush, or corner joints completely closed with neatly welded backtrim. Furnish frames complete with felt or sponge rubber gaskets on all four sides, except when frames are used as plaster stops.

2.03 AIR DIFFUSERS

A. Square, rectangular or linear type as indicated. Do not use neck or duct connection sizes indicated to size diffusers.

B. Furnish aluminum diffusers with an etched and clear acrylic coated finish where installed in shower, toilet rooms, locker rooms, dishwasher, food serving and kitchens.

C. In general, fabricate diffusers of steel with a white baked enamel finish, or aluminum with an etched and clear acrylic coated finish, unless otherwise specified. Roll or round and reinforce all exposed edges of diffusers and provide readily removable internal diffuser parts to permit cleaning and access to ducts. Design removable parts and assemblies so that they cannot be reassembled in a manner which would produce an incorrect air distribution pattern. Secure internal assemblies with fasteners, which will allow their removal without use of special tools.

D. Circular, Square and Rectangular Diffusers: Complete with volume control damper (and adjustable equalizing grid), fabricated of same material as diffuser. Damper shall be adjustable by means of operator handle and rod device, which is designed to be locked in any position. Diffusers installed in plaster ceilings shall have plaster grounds and anti-smudge rings of same material and finish as diffuser, or diffuser shall have specially designed outer rings or rims with contours of sufficient depth below ceiling line to minimize smudging.

1. Surface Mounted Diffuser: Manufacturers
   a. Carnes Model #SKFA w/KXKA (Steel), #SAFA w/KXUA (Aluminum);
   b. Anemostat Model #SDF w/DOB (Steel), #D w/DOB (Aluminum);
   c. Titus Model #TIC-1 w/AG-95 (Steel), TIC-AA-1 w/AG-95 (Aluminum);
   d. Tuttle Model #ME W/OBD (Steel), #AME W/A7.
2. Stamped for T-Bar Diffuser: Manufacturers
   a. Carnes Model #SFTB w/KXMB (Steel), #SFAB (Aluminum);
   b. Anemostat Model #EPL w/LD (Steel), #EPL (Aluminum);
   c. Titus Model #TMS-3 w/AG-75 (Steel), #TMS-AA (Aluminum);
   d. Tuttle Model #1400 W/T4 (Steel), #A1400 (Aluminum).

E. Linear Diffusers: Complete with air flow and pattern control valve, adjustable to any desired setting, fabricated of same material and with same finish as diffuser.

1. Manufacturers: Aluminum Construction Standard
   a. Carnes Model #CH

b. Anemostat Model #SLAD
c. Titus Model #ML
d. Tuttle Model Imperialine 6000/7000

PART 3 - EXECUTION

3.01 INSTALLATION - GENERAL

A. Unless otherwise shown or specified, install the Work of this section in accordance with the manufacturer's printed installation instructions and the SMACNA Manual.

B. Ductwork seen behind registers, in other words; ductwork visible through a register (inside the duct) shall be painted using one coat of flat black metal paint (after proper surface cleaning). Paint coverage shall be that no unpainted duct will be seen. This applies to all grilles, registers and diffusers.

END OF SECTION 233713

SECTION 233723

ROOF MOUNTED AIR INLETS AND OUTLETS

PART 1 - GENERAL

1.01 RELATED DOCUMENTS

A. Drawings and general provisions of the Contract, including General and Supplementary Conditions and Division 1 Specification Sections, apply to this Section.

1.02 RELATED WORK SPECIFIED ELSEWHERE

Metal Ductwork: Section 233113
Duct Accessories: Section 233300

1.03 SUBMITTALS

A. Product Data: Manufacturer's catalog sheets, standard schematic drawings, specifications and installation instructions for each size unit and curb.

PART 2 - PRODUCTS

2.01 OUTSIDE AIR INTAKES AND RELIEF AIR VENTS

A. Design: Outside air intakes and relief air vents shall be of the same style as the power roof ventilators installed on the same roof, or required to be installed on the same roof, unless otherwise indicated on drawings or specified. Units shall be of sectional construction consisting of a base section and a top section or cover. Top section shall be hinged or easily removable for access to inside of base section and curb.

B. Fabrication: Fabricate intakes and relief vents from a heavy gage aluminum, properly braced and stiffened to form a rigid stormproof unit, which will withstand a minimum horizontal pressure of 30 lbs. per square foot of projected area. Provide 1/2" insulation on underside of hood to prevent condensation. Fabricate all hinges, friction catches and other fastening devices from corrosion resistant material, as approved. Intakes and relief openings shall be provided with aluminum (insect-bird) screens. Basic housing materials for the different styles of intakes and vents are as follows:

1. Standard (Low contour rectangular shaped): Sheet aluminum.
2. Dome Shaped: Spun aluminum top section (dome) and anodized sheet aluminum.
3. Linear (Louver type): Sheet aluminum and heavy gage extruded aluminum louvered sides.

C. Alternate: Air intakes and relief vents with formed steel housings may be

submitted for approval. Chemically pre-treat steel housings and finish with a minimum 2 coat corrosion resistant enamel.

2.02 ROOF CURBS

A. Fabrication: Factory fabricated, double shell aluminum, a minimum of 2" thick, insulated with mineral wool, or thermally equivalent insulation as approved. Fabricate curbs from minimum No. l8 gage aluminum, properly braced and stiffened to form a rigid weatherproof unit.

B. Fabricate curbs for use with formed steel housings as specified for aluminum curbs, with the exception that sheet metal shall be galvanized sheet steel, a minimum of No. 20 gage. Finish all surfaces of curbs with minimum 2 coat corrosion resistant enamel.

C. Manufacture: Curbs shall be the product of the ventilator manufacturer.

PART 3 - EXECUTION

3.01 INSTALLATION

A. Install roof curbs in complete accordance with the manufacturers' printed installation instructions. Coordinate curb sizes and location with all roof openings as required.

B. Secure air intakes and relief air vents to roof curbs, with approved fastening devices.

END OF SECTION 233723

SECTION 234100

AIR FILTERS

PART 1 - GENERAL

1.01 RELATED DOCUMENTS

A. Drawings and general provisions of the Contract, including General and Supplementary Conditions and Division 1 Specification Sections, apply to this Section.

1.02 RELATED WORK SPECIFIED ELSEWHERE

Metal Ductwork: Section 233113
Packaged Rooftop DOAS Unit With Energy Recovery: Section 237223

1.03 REFERENCES

NFPA 90A - Standard for the Installation of Air Conditioning and Ventilating Systems.
UL 900 - Test Performance of Air Filter Units.
ASHRAE 52-76 - Method of Testing Air Cleaning Devices used in General Ventilation for Removing Particulate Matter.

1.04 SUBMITTALS

A. Product Data: Catalog sheets and specifications for each type filter.

B. Quality Control Submittals:

1. Test Reports: Filters shall be tested by an independent testing laboratory in accordance with ASHRAE 52-76. Submit test reports with identifying test number, and certified by an official of the testing laboratory.

1.05 QUALITY ASSURANCE

A. Regulatory Requirements: Supply air filters that are UL listed, Class 2.

1.06 MAINTENANCE

A. Extra Materials: One spare set of air filters for each air handling unit utilizing air filters. Deliver spare filters to the Owner's Representative in the manufacturer's original boxes, labeled as to filter usage.

PART 2 - PRODUCTS

2.01 AIR FILTER TYPES

A. Rigid Air Filters: Extended surface, deep pleated type with average efficiencies based on ASHRAE 52-76; Airguard Vari-Pak (12 inch thick), American Air Filter

(12 inch thick), or Precisionaire Rigi Pleat (12 inch thick). Refer to filter schedule on drawings for size and capacity.

1. Assembly: Filter pack constructed of high density microfine glass fibers laminated to synthetic backing material, and bonded to corrosion resistant welded wire support grid. Pleat configuration maintained by pleat spacers installed on both air entering and air exiting sides. Filter pack enclosed and continuously sealed to galvanized steel enclosing frame, and supported by diagonal members bonded to both air entering and air exiting sides.

PART 3 EXECUTION

3.01 INSTALLATION

A. Install high efficiency filter bank assemblies in ductwork or housing chambers all as indicated on the drawings.

END OF SECTION 234100

SECTION 235123

GAS VENTS (TYPE B)

PART 1 - GENERAL

1.01 RELATED DOCUMENTS

A. Drawings and general provisions of the Contract, including General and Supplementary Conditions and other Division 1 Specification Sections, apply to this Section.

1.02 SUBMITTALS

A. Product Data: Catalog cut sheets, specifications and installation instructions for each item specified.

B. Provide 1/4" scale dimensioned fabrication drawings including all components for a complete system allowing for expansion and drainage and coordinated with other trades.

B. Provide manufacturer's sizing calculations according to ASHRAE methods and parts list specific to this project.

C. Provide surface temperatures and clearances resulting from UL103.

1.03 QUALITY ASSURANCE

A. All products furnished under this Section shall conform to the requirements of The National Fuel Gas Code, NFPA-54, 1996 Edition. Products shall be listed to UL-441 and shall carry the appropriate UL or UL listing mark or label.

1.04 WARRANTY

A. Type B Vent shall be warranted by the manufacturer against defects in material and workmanship for a period of one (1) year from the date of the original installation.

PART 2 - PRODUCT

2.01 PRODUCTS

A. The vent shall be of the double wall, factory built type for use with acceptable Category I appliances burning natural gas, which produce flue gases exhausted at temperatures not exceeding 550º F.

B. The vent shall be constructed of an outer wall of galvanized steel, .018" thick G-90 for sizes 3" to 8" diameter, .020" thick G-90 for sizes 10" to 16" diameter, and .026" thick G-90 for sizes 18" to 30" diameter.

1. The inner wall shall be constructed of aluminum alloy, .012" thick for sizes 3" to 6" diameter and .018" thick for sizes 7" to 30" diameter.
2. The vent shall include an integral, annular insulating air space, 1/4" thick for sizes 3" to 8" diameter and 1/2" thick for sizes 10" to 30" diameter.

C. Edges of inner and outer walls shall be hemmed prior to final assembly to prevent pipe and fittings from having exposed sharp edges. Walls shall be attached to maintain spacing and prevent separation of inner and outer walls.

D. All fittings, flashing, storm collar, cap, and appliance adapter required to install the vent shall be included.

E. Vent shall be tested and listed for a minimum clearance to combustibles of 1" for sizes 3" to 24" diameter and 2" for sizes 26" to 30" diameter.

F. Vent shall terminate as required by code.

G. B-Vent shall be installed in accordance with the vent manufacturer's installation instructions, UL Listing and state of local codes.

PART 3 - EXECUTION

3.01 INSTALLATION

A. Install in accordance with the manufacturer's printed installation instructions.

B. All horizontal flue shall be pitched up and away from boilers and hot water heater at a minimum of one quarter inch per foot.

C. Maintain 6" clearance between interior flue pipe and combustible materials including pipe and duct insulation.

D. Maintain 12" clearance between exterior flue pipe and combustible materials.

END OF SECTION 235123

SECTION 235413

ELECTRIC CABINET HEATERS

PART 1 - GENERAL

1.01 RELATED DOCUMENTS

A. Drawings and general provisions of the Contract, including General and Supplementary Conditions and Division 1 Specification Sections, apply to this Section.

1.02 REFERENCES

AMCA and ARI standards.
UL listed.

1.03 SUBMITTALS

A. Product Data: Manufacturer's catalog sheets, standard schematic drawings, specifications and installation instruction for each size unit and curb.

B. Contract Closeout Submittals:

1. Operation and Maintenance Data: Submit 2 copies to the Engineer, incorporated within maintenance manuals, covering the installed products.

1.04 MAINTENANCE

A. Spare Parts: Two complete sets of filters for each heater; packaged and labeled as to their usage.

PART 2 - PRODUCTS

2.01 ACCEPTABLE MANUFACTURERS

Chromalox
Markel
Q’Mark

2.02 ELECTRIC HEATERS

A. Cabinet: Provide a minimum No. 16 gage sheet steel cabinet, formed, reinforced and braced for rigidity, complete with inlet and outlet grilles, located as indicated. Provide filter frame with filters directly behind air inlet grille, or directly under fan assembly.

B. Heating Elements: Provide unitary chrome-nickel finned strip elements, each encased in a heavy gage galvanized or aluminized steel enclosure. Furnish elements of the enclosed, non-glowing type. Totally enclose elements, to prevent contact with live electrical parts or accessories.

C. Fan Assembly: Provide steel or non-ferrous, multi-blade, forward curved centrifugal type fans, statically and dynamically balanced, direct or Vee belt connected to a resiliently mounted electric motor. Design motors to operate on 120 volt, 60 cycle, 1 phase service.

D. Controllers: Provide a manually operated on-off switch for single speed units, and a speed selector switch with off position for multi-speed units. Mount all controllers on unit casings or remotely, as indicated.

E. Accessories: Furnish each unit complete with all internal wiring in conduit, a safety disconnect switch, an automatic reset high limit switch, wired in series with all heating elements located in the discharge air-stream, and a fan switch wired to allow the fan to operate after heater shut-down to dissipate all heat. Furnish control transformer installed inside casing, when heater voltage differs from motor voltage and provide terminal strip for remote wall mounted thermostat.

F. Factory Finish: Furnish all exposed surfaces of heaters, with a factory applied two coat baked enamel finish. Colors shall be as selected by the Architect/Engineer from the heater manufacturer's standard color charts.

PART 3 - EXECUTION

3.01 INSTALLATION

A. Install heaters at locations indicated on drawings.

1. Floor Mounted Type: Secure to wall construction as required and directed.
2. Ceiling Mounted Type: Secure to overhead construction with rod type hangers, in number and size as recommended by the heater manufacturer.

3.02 CONTROL

A. Install wall mounted low voltage thermostat as indicated on drawings or as directed.

END OF SECTION 235413

SECTION 237223

PACKAGED ROOFTOP DOAS UNIT WITH ENERGY RECOVERY

PART 1 - GENERAL

1.1 RELATED DOCUMENTS

A. Drawings and general provisions of the Contract, including General and Supplementary Conditions and Division 1 Specification Sections, apply to this Section.

1.2 RELATED WORK SPECIFIED ELSEWHERE

Vibration Isolation: Section 230550
Division 26 Specifications

1.3 SUBMITTALS

A. Product Data: Manufacturer's catalog sheets, brochures, performance charts, standard schematic drawings, specifications and installation instructions for each type of unit specified.

B. Contract Closeout Submittals:

1. Operation and Maintenance Data: Submit 2 copies to the Engineer, incorporated within maintenance manuals, covering the installed products.

1.4 QUALITY ASSURANCE

A. Requirements of Regulatory Agencies: Fan ratings shall be approved by the AMCA. In lieu of an AMCA approved fan rating for the fan section of the unit, the Engineer may accept the fan manufacturer's certified rating, provided this fan manufacturer has AMCA approved ratings on his regularly manufactured centrifugal fans.

B. Source Quality Control: Factory test units in accordance with AMCA Standard 210 "Test Code for Air Moving Devices" and ARI Standard 410 "Standard for Forced Circulation Air Cooling and Air Heating Coils".

1.5 WARRANTY

A. Provide parts and labor warranty extending either 12-months from date of unit start-up or a maximum of 18-months from unit ship date.
B. Provide twenty-five year heat exchanger limited warranty from unit ship date.
C. Provide five year compressor warranty for all units.

1.6 MAINTENANCE

A. Extra Materials: Provide one complete spare set of air filters with each unit, in addition to the installed operating set. Suitably box and label spare filters.

PART 2 - PRODUCTS

2.1 ACCEPTABLE MANUFACTURERS

Trane Horizon Model OAU.

2.2 MATERIALS

A. Sheet Metal:

1. Galvanized Sheet Steel: Zinc coated carbon steel, commercial quality-ASTM A527-67, mill phosphatized. Galvanizing: ASTM A525-67, commercial coating class 1.25 oz. per sq. ft.
2. Cold Rolled Steel: Carbon steel, commercial quality-ASTM A366-66T. Sheet steel shall be de-greased, cleaned and phosphatized in the factory of the manufacturer, or mill phosphatized.

2.3 AIR HANDLING UNITS

A. GENERAL UNIT DESCRIPTION

1. Unit(s) furnished and installed shall be packaged outdoor air unit(s) as scheduled on contract documents and described in these specifications. Unit(s) shall be designed for dehumidification, cooling and/or heating of 100% Outdoor Air. For dehumidification and cooling modes the evaporator temperature shall be monitored, reported at unit controller. Compressor controls shall modulate capacity to maintain evaporator leaving set point. Hot Gas Bypass shall not be used to control compressor capacity. Compressor Hot Gas Reheat (HGRH) shall be factory installed. To prevent rehydration of evaporator condensate the reheat coil face shall be located a minimum of 6” downstream from the leaving face of the evaporator coil. Heating system shall include modulating controls. Compressor on-off only or primary heating on-off only controls shall not be acceptable control strategies.
2. Unit(s) shall have labels, decals, and/or tags to aid in the service of the unit and indicate caution areas.
3. Unit discharge airflow configuration shall be, vertical discharge thru unit base.

B. CABINET

1. Cabinet panels: 2” double-wall foamed panel construction throughout the indoor section of unit to provide nonporous, cleanable interior surfaces. All interior seams exposed to airflow shall be sealed.
2. Insulation: 2” polyisocyanurate foam metal encapsulated with no exposed edges. Initial R value of 6.6 per inch of thickness.
3. Cabinet base shall be double wall construction designed to prevent trapping or ponding of water within the unit base. Cabinet base pan shall be insulated with 2” thick polyisocyanurate foam. Foam insulation shall be fully enclosed with galvanized steel insulation cover. Insulation shall not be applied to underside of unit base.
4. Cabinet Base Rails: Side and end base rails shall include openings for forklift and tie-down access. To protect unit base from fork damage side rails shall include removable heavy gauge fork pockets.
5. Shipping anchors attach to and/or through unit base rails. Straps over unit shall not be used to secure unit for shipping.
6. Cabinet material interior and base rails: shall be G-90 zinc-coated galvanized steel. Material gauge shall be a minimum of 14-gauge for base rails, 16-gauge for structural members and 20-gauge for access doors and cabinet panels.

7. Exterior Corrosion Protection: Exterior cabinet panels shall be a base coat of G-90 galvanized steel with both exterior and interior surfaces cleaned, phosphatized and finished with a weather-resistant baked enamel finish. Unit's surface shall be in compliance with ASTM B45 salt spray testing at a minimum of 672 hour duration.
8. Cabinet construction shall provide hinged panels providing easy access for all parts requiring routine service.
9. Cabinet top cover shall be one piece construction or where seams exist, it shall be double-hemmed and gasket-sealed.
10. Hinged Access Panels: Water- and air-tight hinged access panels shall provide access to all areas requiring routine service including air filters, heating section, electrical and control cabinet sections, optional ERV and power exhaust fan section, supply air fan section, evaporator and reheat coil sections. Insulated doors shall be constructed to allow the hinges to be reversed in the field.
    a. Hold-open devices shall be factory installed on all hinged access doors. Chains shall not be used as hold-open devices.
    b. Latches with locking hasp or tool operated closure devices shall be factory installed on all hinged access panels.
11. Drain Pan material shall be Type 430 Stainless steel drain and constructed to be sloped in two directions to ensure positive drainage with corners exposed to standing water and drain fittings welded liquid tight to prevent leaks. Pan shall have a minimum depth of 2". Base of drain pan shall be insulated with 1" thick foam insulation.
12. Provide openings either on side of unit or thru the base for power, control and gas connections.
13. Cabinet shall include optional interior liner constructed of Type 304 stainless steel with sealed seams.
14. Unit shall be equipped with a 6" filter rack upstream of the evaporator. Frame shall be field-adjustable to match any filter combination specified in the following section.

C. FANS AND MOTORS

1. Indoor fans shall be high efficiency backward curved impeller.
2. The indoor fan motor shall be an electronic commutated motor with integrated power electronics for variable motor speed.
3. Outdoor fans shall be direct drive with premium efficiency motors, statically and dynamically balanced, draw through in the vertical discharge position.
4. Provide shafts constructed of solid hot rolled steel, ground and polished, with key-way, and protectively coated with lubricating oil.

D. AIR FILTERS

1. Evaporator Inlet shall include a full compliment of pleated media air filters. Filters shall be:
    a. 2" deep MERV 13

E. DAMPERS

1. Unit shall include a motor operated outdoor air damper constructed of galvanized steel.
2. Damper blades shall be air foil design with rubber edge seals designed not to exceed a 4 CFM/SQ FT leakage rate exceeding ASHRAE 90.1 damper leakage requirements.
3. Damper actuator shall be factory mounted and wired sealed spring return and either two-position or fully modulating.
4. Dampers air velocity shall not exceed 2000 fpm.

5. Return Air damper shall be of same material, construction and leakage rate as outdoor air damper. Return air damper actuator shall be factory mounted and wired sealed spring fully modulating and operate based on outdoor air damper feedback signal to properly regulate RA airflow.

F. DEHUMIDIFICATION/COOLING

1. Compressors
   a. Digital Scroll Compressor
      i. Circuit One
   b. Motor shall be suction gas-cooled and shall have a voltage utilization range of plus or minus 10 percent of unit nameplate voltage.
   c. Internal overloads shall be provided with the scroll compressors.
   d. Each compressor shall have a crankcase heater to minimize the amount of liquid refrigerant present in the oil sump during off cycles.
   e. Each compressor shall be mounted on rubber vibration isolators, to reduce the transmission of noise.
   f. Provide each unit with one hermetically sealed refrigerant circuit(s) factory-supplied completely piped with liquid line filter-drier, liquid line charging port, suction and liquid line pressure ports, sight glass, and thermal expansion valve.
   g. Provide each circuit with automatic reset high and low pressure and high temperature switches for safety control.

2. Coils
   a. Evaporator, Condenser and Hot Gas Reheat coils shall be constructed with copper tubes mechanically bonded to configured aluminum plate fins.
   b. Coils shall be factory leak tested in accordance ANSI/ASHRAE 15-1992 at a minimum pressure of 500 PSIG.
   c. The condenser coil shall have a fin designed for ease of cleaning.
   d. Evaporator coil shall include four or six rows of cooling interlaced for superior sensible and latent cooling with a maximum of 12 FPI for ease of cleaning.
   e. Reheat coil shall be fully integrated into the supply airstream and be capable of delivering design supply air temperature.
   f. To prevent re-hydration of condensate from evaporator coil, the evaporator coil face and the hot gas reheat coil face shall be separated by a minimum of six inches.
   g. Condenser coil hail guards shall be factory installed.

3. Condenser Section

   a. Outdoor Fans: Shall be direct drive vertical discharge design with low-noise corrosion resistant glass reinforced polypropylene props, powder coated wire discharge guards and electro-plated motor mounting brackets.
   b. Fans shall be statically and dynamically balanced.

G. HEATING

1. Gas Furnace

   a. Primary heat is supplied using indirect fired gas heating. The heating section shall have a progressive tubular heat exchanger design using Stainless Steel burners and type 439 Stainless Steel tubes. An induced draft combustion blower shall be used to pull the combustion products through the firing tubes. The heater shall use a direct spark ignition (DS) system. On initial call for heat, the combustion blower shall purge the heat exchanger for 20 seconds before ignition. After three unsuccessful ignition attempts, the entire heating system shall be locked out until manually reset at the thermostat/zone sensor. Units shall be comply with the California requirement for low NOx emissions. Unit shall be suitable for use with Natural Gas. Minimum incoming gas pressure of 7" W.C. and Maximum pressure of 14" W.C. required. Factory provided 25 year heat exchanger warranty.

H. ELECTRICAL RATINGS AND CONNECTIONS

1. All high voltage power components such as fuses, switches and contactors shall include a service personnel protection barrier or shall be a listed as touch-safe design.
2. Field wiring access to be provided thru unit base into isolated enclosure with removable cover.
3. Power wiring to be single point connection.
4. Wiring internal to the unit shall be colored and numbered for identification.
5. Unit shall be factory wired to field wiring terminal block mounted in isolated enclosure.
6. Factory wired main power disconnect and overcurrent device shall be rated for total unit connected power
7. Unit SCCR rating shall be a minimum of 5kA
8. Factory wired Voltage/Phase monitor shall be included as standard. In the event of any of the following, the units will be shut down and a fault code will be stored in the monitor for the most recent 25 faults. Upon correction of the fault condition the unit will reset and restart automatically.
   a. Phase Unbalance Protection: Factory set 2%
   b. Over/Under/Brown Out Voltage Protection: +/-10% of nameplate voltage
   c. Phase Loss/Reversal
9. Factory to mount and wire optional120 volt convenience outlet. Field wiring of convenience outlet not acceptable.
10. All low voltage field wiring connections shall be made at factory installed low voltage terminal strip.

I. UNIT CONTROLS

1. Main Unit Controller (MCM) shall be a microprocessor based controller with resident control logic. Controller program logic shall include
   a. Include single program with field selectable
      i. Discharge Air control with unit conditioning modes enabled based on outdoor air conditions and controlled to maintain discharge air setpoints.
      ii. Space control with unit conditioning modes enabled and controlled to maintain space setpoints.

2. MCM shall:
   a. Prevent simultaneous operation of any conditioning modes.
   b. Accept separate setpoints for Occupied and Unoccupied states.
   c. Call for Dehumidification based on dew point setpoints. When no call for Dehumidification is present MCM shall control calls for Cooling, Heating and Economizer modes based on sensible or enthalpy temperature setpoints. MCM shall have onboard clock and scheduling function for occupancy.
   d. Include non-volatile memory to retain all programmed values without the use of a battery, in the event of a power failure.
   e. Enable HGRH dehumidification and cooling modes and control modulation to maintain (discharge air temperature / space temperature).
   f. Unit shall include minimum discharge air control.
3. MCM Touch Screen shall include full color display and shall be (factory installed in unit control compartment / field mounted remote from unit and field wired up to a maximum of 300 ft.) and provide a full list of points included in the MCM. The display shall provide a list and history of all unit alarms.

4. System Sensors shall include: Factory installed and wired Outdoor Air Temperature, Outdoor Air Humidity and Evaporator Leaving Air Temperature and factory furnished, field installed Discharge Air Temperature.
   a. ERV Option includes exhaust air leaving temperature sensor
5. System controls shall include:
   a. Anti-cycle timing.
   b. Minimum compressor run/off-times.

J. POWER EXHAUST – BAROMETRIC RELIEF

1. Provide a factory installed power exhaust assembly that shall be designed to ventilate return air to atmosphere.
2. Plenum mounted direct drive airfoil design exhaust wheel material shall be heavy gauge aluminum, welded construction and rated for up to Class III speed/pressure performance. Belt-drive and/or forward curve plenums fans shall not be used.
3. Exhaust to discharge through Barometric relief dampers with counterbalance weight located on each side of unit cabinet.

K. OUTDOOR AIR SECTION ENERGY RECOVERY (ERV)

1. The rotating wheel heat exchanger is composed of a rotating cylinder in an insulated cassette frame complete with removable energy transfer media, seals, drive motor and drive belt. Energy transfer media shall be constructed of a durable synthetic lightweight polymer. The total energy recovery wheel is coated with a desiccant that shall be either Type-A silica gel or 3A molecular sieve and permanently bonded to the energy transfer media without the use of binders or adhesives. The lightweight polymer substrate will not degrade nor require additional coatings for application in marine or coastal environments. Coated segments are cleanable outside of the cabinet with detergent or alkaline coil cleaner and water. Desiccant will not dissolve nor deliquesce in the presence of water or high humidity.
2. Sensible and latent recovery efficiencies must be clearly documented through a testing program conducted in accordance with ASHRAE Standard 84 and AHRI 1060. The testing must have been conducted by a qualified independent organization. The performance test reports must be provided for engineering review as part of the submittals for this project.
3. The rotor design shall ensure laminar airflow to minimize parasitic pressure loss and to optimize the operating efficiency of the system fans. The pressure loss across the media shall be no greater than the scheduled pressure loss values. The energy wheel shall operate effectively up to 180 degrees F.
4. The rotor media shall be permanent, with an anticipated life of 20 years. It must be tested in accordance with ASTM Standard E-84 and provide smoke and flame spread ratings of less than 25 and 50 as required by NFPA 90A and UL 1995. A copy of the ASTM E-84 test report confirming the method of test and results shall be provided with the submittal. Heat recovery wheels incorporating “throw-away” media and tested to UL900 for Class 2 filters are not acceptable.
5. The wheel manufacturer must have been producing energy recovery wheels for a minimum of ten years.
6. The rotor shall be supplied with perimeter brush seals and face contact seals to minimize air leakage and wheel bypass.
7. The rotor media shall be supported by a structural aluminum hub and aluminum reinforcing spoke system. The rotor bearings must be greaseable and provide L10 life in excess of 20 years.

8. The cassette framework shall be made of galvanized steel to prevent corrosion.
9. The rotor must be driven by long-life polyurethane/polyester composite link belt system. The rotor/cassette shall be designed so that belt can be removed or serviced without the removal of the bearing. A 3 phase A/C gear motor shall be utilized to accommodate variable speed applications.

2.4 ROOF CURB

A. Contractor shall provide factory 14” high tall roof curb, 18 gauge perimeter made of zinc coated steel with supply and return air gasketing and wood nailer strips. Ship knocked down and provided with instructions for easy assembly.

B. Curb shall be manufactured in accordance with the National Roofing Contractors Association guidelines.

PART 3 - EXECUTION

3.1 INSTALLATION

A. Install units of type as indicated, in complete accordance with the manufacturer's instructions and as indicated.

B. Support: Install units on factory built roof mounting frame providing watertight enclosure to protect ductwork and utility services. Install roof mounting curb level.

3.2 MANUFACTURERS FIELD SERVICES

A. Unit start-up and commissioning shall be completed by a Factory-trained and factory-certified technician.
   1. Manufacturer must have twenty factory-authorized and factory-trained technicians within a 50 mile radius of job site.
B. The contractor shall furnish manufacturer complete submittal wiring diagrams of the package unit as applicable for field maintenance and service.

END OF SECTION 237223

ADDENDUM TO SECTION 237223

Mechanical Specifications - Tag(s): DOAS-1-GH-208V

General

The unit shall be either field convertible (OAB) or configured at the factory between Down/Horizontal discharge for both Supply and Return Openings. Cooling performance shall be rated in accordance with ARI testing procedures. All units shall be factory assembled, internally wired, and 100 percent run tested to check cooling operation, fan and blower rotation, and control sequence before leaving the factory. Wiring internal to the unit shall be colored and numbered for simplified identification.

Casing

Unit casing shall be constructed of zinc coated, heavy gauge, galvanized steel. Exterior surfaces shall be cleaned, phosphatized, and finished with a weather-resistant baked enamel finish. Unit's surface shall be tested 672 hours in a salt spray test in compliance with ASTM B117. Unit shall have 2 inch thick Antimicrobial polyisocyanurate foam insulation, metal encapsulated with no exposed edges. Initial R value of 6.6 per inch of thickness. The unit's base pan shall have no penetrations within the perimeter of the curb other than the raised downflow supply/return openings to provide an added water integrity precaution, if the condensate drain backs up.

Unit Top

The top cover shall be one piece construction or, where seams exist, it shall be double-hemmed and gasket-sealed. The ribbed top adds extra strength and enhances water removal from unit top

Sensors

A factory installed combination outdoor air sensor located in the outdoor air hood is designed to sense both outdoor air temperature and relative humidity for use by the microprocessor controller to make required ventilation, cooling, dehumidification and heating decisions. Refer to the Sequence of Operations section of the Installation, Operation and Maintenance manual for detailed unit control and operational modes. A factory installed sensing tube is designed to sense the supply air temperature downstream of the indoor fan section.

Evaporator Coil: DX 6 Row Interlaced

Internally finned, 5/16 inch copper tubes mechanically bonded to a configured aluminum plate fin shall be standard. Coils shall be leak tested at the factory to ensure the pressure integrity. The evaporator coil shall be leak tested to 500 psig and pressure tested to 500 psig. A Stainless Steel double-sloped condensate drain pan with provision for through the unit wall condensate drain is standard. Evaporator coil will have 6 interlaced rows for superior sensible and latent cooling.

Hot Gas Reheat: Modulating

This option shall consist of a modulating hot-gas reheat coil located on the leaving air side of the evaporator coil pre-piped and circuited with a low pressure switch. Refer to the Sequence of Operations section of the Installation, Operation and Maintenance manual for detailed unit control and operational modes.

Compressor: Digital Scroll Primary Circuit

All units shall have direct-drive, hermetic, digital scroll type compressors with centrifugal type oil pumps. Motor shall be suction gas-cooled and shall have a voltage utilization range of plus or minus 10 percent of unit nameplate voltage. Internal overloads shall be provided with the scroll compressors. Crankcase heaters shall be included. Compressor shall be able to fully modulate from 20%-100%.

Condenser: Air Cooled Variable Speed Head Pressure Low Ambient Control

(Fin and Tube Coil) - Internally finned, 5/16 inch copper tubes mechanically bonded to a configured aluminum plate fin shall be standard. Coils shall be leak tested at the factory to ensure the pressure integrity. The condenser coil shall be leak tested to 500 psig and pressure tested to 500 psig. The condenser coil shall have a fin design with slight gaps for ease of cleaning.
Outdoor Fans: Shall be direct drive vertical discharge design with low-noise corrosion resistant glass reinforced polypropylene props, powder coated wire discharge guards and electro-plated motor mounting brackets. Fans shall be statically and dynamically balanced.
Condenser fans to be controlled via VFD to maintain adjustable pressure to increase reheat capacity where applicable and low ambient control.

Capacity Control: R-454B - Low GWP Refrigerant & No RCC Valve

All units shall be fully charged with R-454B. Units shall be ETL listed and labeled, classified in accordance to UL 60335-2-40/CSA C22.2 No. 60335-2-40 for Central Cooling Air Conditioners. Canadian units shall be CSA Certified.

Indoor Blower Motor: Direct Drive w/VFD

Supply Fan motor shall be direct drive type with factory installed Variable Frequency Drive (unless no controls option is selected, VFD can be provided by others). All motors shall be thermally protected. All indoor fan motors meet the U.S. Energy Policy Act of 2005 (EPACT). All Fans shall be mounted on rubber vibration isolators, to reduce the transmission of noise.

439 Stainless Steel Furnace: 125 Mbtu/h, (5:1 Turndown NG, 4:1 Turndown LP)

Primary heat is supplied using indirect fired gas heating. The heating section shall have a progressive tubular heat exchanger design using Stainless Steel burners and type 439 Stainless Steel tubes. An induced draft combustion blower shall be used to pull the combustion products through the firing tubes. The heater shall use a direct spark ignition (DS) system. On initial call for heat, the combustion blower shall purge the heat exchanger for 20 seconds before ignition. After three unsuccessful ignition attempts, the entire heating system shall be locked out until manually reset at the thermostat/zone sensor. Units shall be comply with the California requirement for low NOx emissions. Unit shall be suitable for use with Natural Gas. Minimum incoming gas pressure of 7" W.C. and Maximum pressure of 14" W.C. required. Factory provided 25 year heat exchanger warranty.

Unit Controls: Trane UC600 - Discharge Air Control w/BACNET w/Display

Unit is completely factory wired with necessary controls and contactor pressure lugs for power wiring. Units will provide an external location for mounting fused disconnect device. PLC controls are provided for all 24 volt control functions. The resident control algorithms will make all heating, cooling and/or ventilating decisions in response to electronic signals from sensors measuring outdoor temperature and humidity. The control algorithm maintains accurate temperature control, minimizes drift from set point and provides better building comfort. A centralized PLC (UC600) will provide anti-short cycle timing for a higher level of machine protection. Terminals are provided for a field installed dry contact or switch closure to put the unit in the Occupied or Unoccupied modes.

Powered Exhaust: Direct Drive w/VFD & Barometric Relief Damper

Powered Exhaust Fan motor shall be direct drive type with factory installed Variable Frequency Drive to(unless no controls option is selected and the VFD is to be provided by others) allow variable air volume operation. All motors shall be thermally protected. All fan motors shall meet the U.S. Energy Policy Act of 2005 (EPACT). All Fan(s) shall be mounted on rubber vibration isolators, to reduce the transmission of noise.

Energy Recovery & Conservation: ERC-3018C-4M

Energy recovery wheel performance shall be AHRI 1060 certified and bear the AHRI certified label. The rotor media shall be light weight and must be made of aluminum. Paper or fibrous media are not acceptable. All surfaces must be coated with a nonmigrating adsorbent layer of desiccant prior to being formed into the media structure to insure that all surfaces are coated and that adequate latent capacity is provided. The desiccant must be a 3A molecular sieve designed for the adsorption of water vapor. The media shall be cleanable by vacuuming the media surface, without degrading the latent recovery. Dry particles up to 800 microns shall pass freely through the media.

Filters: MERV-8 & MERV-13

Aluminum Mesh Filters (K and N Cabinets) and Galvanized Mesh Bird Screen (B and G Cabinets)shall be installed on the intake of the unit. In addition, one row of 2 inch MERV-8 rated prefilters (30 percent) and 2 inch MERV-13 final filter (80 percent) installed prior to the evaporator coil. Unit shall be equipped with a 6” filter rack upstream of the evaporator. Frame shall be field-adjustable to match any filter combination specified in the attached selection.

Smoke Detectors: Supply & Return

Smoke detectors shall be factory installed photoelectric smoke detectors mounted in the supply and return air section. The detector will be wired for continuous power whenever the unit is energized. Upon detection of smoke, the detector will shut down all unit operations. Local codes may dictate the location of detectors.

Electrical Options: Non-Fused Disconnect Switch "Circuit Breaker" w/ 115v Outlet (OAB)

A 3-pole, molded case, HACR circuit breaker with provisions for through the base electrical connections shall be factory installed. Wiring will be provided from the circuit breaker to the unit high voltage terminal block. The switch will be UL/CSA agency recognized. The circuit breaker will be sized per NEC and UL guidelines. A powered 120 volt, 15 amp, 2 plug convenience outlet shall be factory installed. A service receptacle disconnect shall be installed. The convenience outlet is powered from the line side of the disconnect or circuit breaker, and therefore will not be affected by the position of the disconnect or circuit breaker.

Factory wired Voltage/Phase monitor shall be included as standard. In the event of any of the following, the units will be shut down and upon correction of the fault condition the unit will reset and restart automatically.

1. Phase Unbalance Protection: Factory set 2%
2. Over/Under/Brown Out Voltage Protection: +/-10% of nameplate voltage
3. Phase Loss/Reversal

Accessories: Condenser Hailguard

Hailguards shall be installed on the outside of the condenser coil. The guards shall consist of perforated metal, of the same gauge and color as the unit itself. Airflow through the hail guards shall not be restricted due to location or size of the perforations. Guards shall be removable to accommodate coil cleaning.

END OF ADDENDUM TO SECTION 237223

SECTION 237314

VARIABLE FREQUENCY DRIVES

I.GENERAL

A. This specification covers all variable frequency drives (VFDs) designated on the drawing schedules. All standard and optional features detailed herein shall be included within the VFD panel.

   The VFD shall be factory installed by the HVAC original equipment manufacturer. The VFD shall have been evaluated by UL and found acceptable for mounting in a plenum or other air handling compartment. Manufacturer shall supply a copy of the UL plenum evaluation upon request.

B. The VFD shall be tested to UL 508C and bear the appropriate UL label. VFDs designated for use in Canada shall have C-UL certifications.

C. The VFD shall be CE marked and conform to the European Union Electro Magnetic Compatibility directive.

D. The VFD shall be UL listed for a short circuit current rating of 100 kA and labeled with this rating either in the instruction manual or with a drive marking, in accordance with UL.

E. The VFD manufacturer shall supply the VFD and all necessary controls as herein specified. The manufacturer shall have been engaged in the production of this type of equipment for a minimum of twenty years.

F. VFD shall be manufactured in ISO 9001, 2000 certified facilities.

II.PRODUCTS

A. The VFD shall convert incoming fixed frequency three-phase AC power into an adjustable frequency and voltage for controlling the speed of three-phase AC motors. The motor current shall closely approximate a sine wave. Motor voltage shall be varied with frequency to maintain desired motor magnetization current suitable for the driven load and to eliminate the need for motor de-rating. Additionally, the VFD shall have the capability to control non-salient permanent magnet (PMAC) motors up to 22kW (30 HP).

   When properly sized, the VFD shall allow the motor to produce full rated power at rated motor voltage, current, and speed without using the motor's service factor. VFDs utilizing sine weighted/coded modulation (with or without 3rd harmonic injection) must provide data verifying that the motors will not draw more than full load current during full load and full speed operation.

B. The VFD shall include an input full-wave bridge rectifier and maintain a fundamental (displacement) power factor near unity regardless of speed or load.

C. The VFD shall be capable of full output current at frequencies in the range of 0 to 120 Hz without de-rating.

D. The VFD shall have a dual 5% impedance DC link reactor on the positive and negative rails of the DC bus to minimize power line harmonics and protect the VFD from power line transients. The DC link reactors shall be non-saturating. DC link reactors using swinging chokes that do not provide full harmonic filtering throughout the entire load range are not acceptable.

E. The VFD shall be able to provide full rated output current continuously and up to 110% of rated output current for 60 seconds.

F. The VFD shall provide full motor torque at any selected frequency from 20 Hz to base speed while providing a variable torque V/Hz output at reduced speed. This is to allow driving direct drive fans without high speed de-rating or low speed excessive magnetization, as would occur if a constant torque V/Hz curve was used at reduced speeds. Breakaway current of 130% shall be available for 0.5 seconds.

G. A programmable automatic energy optimization selection feature shall be provided standard in the VFD. This feature shall automatically and continuously monitor the motor's speed and load to adjust the applied voltage to maximize energy savings.
H. The VFD must be able to operate a direct drive fan through its full operating range.
I. VFD shall be capable of controlling multiple induction motors simultaneously. Multiple motor operation will require additional protective devices per motor.
J. Input and output power circuit switching shall be accomplished without interlocks or damage to the VFD. Switching rate may be up to 1 time per minute on the input and unlimited on the output.
K. An automatic motor adaptation algorithm shall be provided in the VFD to measure motor stator resistance and reactance to optimize performance and efficiency. It shall not be necessary to run the motor or de-couple the motor from the load to perform the test.
L. VFD shall minimize the audible motor noise through the use of an adjustable carrier frequency. The carrier frequency shall be automatically adjusted to optimize motor and VFD operation while reducing motor noise. VFDs with fixed carrier frequency are not acceptable.
M. All VFDs rated at 480V and below shall contain integral EMI filters to attenuate radio frequency interference conducted to the AC power line.
N. Galvanic and/or optical isolation shall be provided between the VFD's power circuitry and control circuitry to ensure operator safety and to protect connected electronic control equipment from damage caused by voltage spikes, current surges, and ground loop currents.

III. PROTECTIVE FEATURES

A. A minimum of Class 20 I2t electronic motor overload protection for single motor applications shall be provided. Overload protection shall automatically compensate for changes in motor speed.
B. The VFD shall provide protection against input transients, loss of AC line phase, output short circuit, output ground fault, over voltage, under voltage, VFD over temperature and motor over temperature. The VFD shall display all faults in plain language. Codes are not acceptable.
C. The VFD shall be protected from input phase loss. The VFD should be able to protect itself from damage and indicate the phase loss condition. During an input phase loss condition, the VFD shall be able to be programmed to either trip off while displaying an alarm, issue a warning while running at reduced output capacity, or issue a warning while running at full commanded speed. This function is independent of which input power phase is lost.
D. The VFD shall be protected from under voltage. The VFD shall provide full rated output power with an input voltage as low as 90% of the nominal. The VFD will continue to operate with reduced output power, without faulting, with an input voltage as low as 85% of the nominal voltage as required by EN/IEC 61800-3.
E. The VFD shall be protected from over voltage. The VFD shall continue to operate without faulting with a momentary input voltage higher than 110% of the nominal voltage.
F. VFD design shall comply with IEC Part 34-17 to prevent breakdown of the motor winding insulation.
G. The VFD shall incorporate a programmable motor preheat feature which provides the motor stator with a controlled level of current to keep the motor warm and prevent condensation build up in idle motors operating in damp environments. .
H. VFD shall include a "signal loss detection" algorithm with adjustable time delay to sense the loss of an analog input signal. It shall also include a programmable time delay to eliminate nuisance signal loss indications. The functions after detection shall be programmable.
I. VFD shall function normally when the keypad is removed while the VFD is running. No warnings or alarms shall be issued as a result of removing the keypad.
J. VFD shall be capable of catching a rotating motor operating forward or reverse up to full speed without VFD fault or component damage.
K. Selectable over-voltage control shall be provided to protect the VFD from power regenerated by the motor while maintaining control of the driven load.

L. VFD shall include current sensors on all three output phases to accurately measure motor current, protect the VFD from output short circuits, output ground faults, and act as a motor overload. If an output phase loss is detected, the VFD will trip off and identify which of the output phases is low or lost.
M. If the temperature of the VFD's heat sink rises to approximately 80°C, the VFD shall automatically reduce its carrier frequency to reduce the heat sink temperature. It shall also be possible to program the VFD so that it reduces its output current limit value if the VFD's temperature becomes too high. The VFD shall automatically increase the carrier frequency and current limit to normal values as the heat sink temperature decreases.
N. The VFD shall store in memory the last 10 alarms. A description of the alarm and the relative sequences of the alarms shall be recorded.

IV. INTERFACE FEATURES

A. Hand, Off and Auto keys shall be provided to start and stop the VFD and determine the source of the speed reference. It shall be possible to either disable these keys or password protect them from undesired operation.
B. The VFD shall be programmable to provide a digital output signal to indicate whether the VFD is in Hand or Auto mode. This is to alert the Building Automation System whether the VFD is being controlled locally or by the Building Automation System.
C. The VFD shall be provided with a keypad with alphanumeric, backlit display. The display shall be capable of remote mounting up to 10 ft. from the VFD. Main Menu password protection shall be provided to guard against unauthorized parameter changes.
D. All VFDs shall have the same customer interface. The keypad and display shall be identical and interchangeable for all sizes of VFDs.
E. To set up multiple VFDs, it shall be possible to upload all setup parameters to the VFD's keypad, place that keypad on all other VFDs in turn and download the setup parameters to each VFD. To facilitate setting up VFDs of various sizes, it shall be possible to download from the keypad only size independent parameters. Keypad shall provide visual indication of copy status.
F. Display shall be programmable to communicate in multiple languages including English, Spanish and French.
G. A red FAULT light, a yellow WARNING light and a green POWER-ON light shall be provided. These indications shall be visible both on the keypad and on the VFD when the keypad is removed.
H. A quick setup menu with factory preset typical HVAC parameters shall be provided on the VFD.
I. A two-feedback PI controller to control the speed of the VFD shall be standard.
   a) This controller shall accept up to two feedback signals. It shall be programmable to follow the sum of the feedback signals, a preset reference (common set point or up to 8 individual setpoints), or the sum of both. It shall also be possible to calculate the controlling feedback signal as the average, maximum, minimum or the difference between two feedback signals. The VFD shall be able to apply scaling to the feedback signal.
   b) For fan flow tracking applications, the VFD shall be able to calculate the square root of any or all individual feedback signals so that a pressure sensor can be used to measure air flow.
   c) The VFD's PI controller shall be able to actively adjust its set point based on flow. This allows the VFD to compensate for a pressure feedback sensor which is located near the output of the pump rather than out in the controlled system.
J. Customized meter displays shall be available. They shall include at a minimum, speed/flow, pressure, and power units relative to motor speed.
K. Programmable Sleep Mode shall be able to stop the VFD. When its output frequency drops below set "sleep" level for a specified time, the VFD may be programmed to stop. When the VFD's speed is being controlled by its PI controller, it shall be possible to program a "wake-up" feedback value that will cause the VFD to start. To avoid excessive starting and stopping of the driven

equipment, it shall be possible to program a minimum run time before sleep mode can be initiated and a minimum sleep time for the VFD.

L. A run permissive circuit shall be provided to accept a “system ready” signal to ensure that the VFD does not start until dampers or other auxiliary equipment are in the proper state for VFD operation. The run permissive circuit shall also be capable of initiating an output “run request” signal to indicate to the external equipment that the VFD has received a request to run.

M. VFD shall be programmable to sense the loss of load. The VFD shall be programmable to signal this condition via a keypad warning, relay output and/or over the serial communications bus. To ensure against nuisance indications, this feature must be based on estimated motor torque, not current, and must include a proof timer to keep brief periods of no load from falsely triggering this indication.

N. Standard Control and Monitoring Inputs and Outputs
   i. Four dedicated, programmable digital inputs shall be provided for interfacing with the systems control and safety interlock circuitry.
   ii. Two terminals shall be programmable to act as either as digital or analog outputs.
   iii. Two programmable relay outputs, Form C 250 VAC, 3 A, shall be provided for remote indication of VFD status.
      a) Each relay shall have an adjustable on delay / off delay time.
   iv. Two programmable analog inputs shall be provided that can be either direct- or reverse-acting.
      b) Each shall be independently selectable to be used with either an analog voltage or current signal.
      c) The maximum and minimum range of each shall be able to be independently scalable from 0 to 10 V dc and 0 to 20 mA.
      d) A programmable low-pass filter for either or both of the analog inputs must be included to compensate for noise.
   v. Two programmable analog current outputs (0/4 to 20 mA) shall be provided for indication of VFD status. This output shall be programmable to show the reference or feedback signal supplied to the VFD and for VFD output frequency, current and power. It shall be possible to scale the minimum and maximum values of the outputs.
   vi. It shall be possible through serial bus communications to read the status of all analog and digital inputs of the VFD.
   vii. It shall be possible to command all digital and analog output through the serial communication bus.

O. Standard programmable firefighter’s override mode allows a digital input to control the VFD and override all other local or remote commands. It shall be possible to program the VFD so that it will ignore most normal VFD safety circuits including motor overload. The VFD shall display FIREMODE whenever in firefighter’s override mode. Fire mode shall allow selection of forward or reverse operation and the selection of a speed source or preset speed, as required to accommodate local fire codes, standards and conditions.

P. The VFD shall be able to store load profile data such as counters for operating hours, running hours, and kilowatt-hours, to assist in analyzing the system demand and energy consumption over time.

Q. The VFD shall include a sequential logic controller to provide advanced control interface capabilities. This shall include:
   i. Comparators of VFD analog values to programmed trigger values
   ii. Logic operators to combine up to three logic expressions using Boolean algebra
   iii. Delay timers
   iv. A 20-step programmable structure

V. SERIAL COMMUNICATIONS

A. The VFD shall include a standard EIA-485 communications port and capabilities to be connected to the following serial communication protocols at no additional cost and without a need to install any additional hardware or software in the VFD:
   i. BACnet MS/TP
   ii. Johnson Controls Metasys N2
   iii. Modbus RTU
   iv. Siemens FLN P1
   v. FC protocol

VI. ADJUSTMENTS

A. The VFD shall have a manually adjustable carrier frequency that can be adjusted in 1 kHz increments up to 6 kHz, 2 kHz increments up to 12 kHz, and 4 kHz up to 16 kHz to allow the user to select the desired operating characteristics. The VFD shall also be programmable to automatically reduce its carrier frequency to avoid tripping due to thermal loading.
B. Two independent setups shall be provided.
C. Eight preset references per setup shall be provided for a total of 16.
D. Each setup shall have two programmable ramp up and ramp down times. Acceleration and deceleration ramp times shall be adjustable over the range from 1 to 3,600 seconds. The shape of these ramps shall be automatically contoured to ensure no-trip acceleration and deceleration.
E. Each setup shall be programmable for a unique current limit value. If the output current from the VFD reaches this value, any further attempt to increase the current produced by the VFD will cause the VFD to reduce its output frequency to reduce the load on the VFD. If the VFD trips on one of the following conditions, the VFD shall be programmable for automatic or manual reset: external interlock, under-voltage, over-voltage, current limit, over temperature, and VFD overload.
F. The number of restart attempts shall be selectable from 0 through 20 or infinity and the time between attempts shall be adjustable from 0 through 600 seconds.
G. An automatic “start delay” may be selected from 0 to 10 seconds. During this delay time, the VFD shall be programmable to either apply no voltage to the motor or apply a DC braking current if desired.
H. Three programmable critical frequency lockout ranges to prevent the VFD from operating the load at a speed that causes vibration in the driven equipment shall be provided. Semi-automatic setting of lockout ranges shall simplify the set-up.
I. When incorporated in the air handler’s design with an optional electro-mechanical bypass, provide a manual 2-contactor bypass consisting of a door interlocked main disconnect pad lockable in the off position, a built-in motor starter and a three position DRIVE/OFF/BYPASS switch controlling two contactors. In the DRIVE position, the motor is operated at an adjustable speed from the VFD. The VFD can be remotely controlled in this position with a pilot relay and analog signal or can be controlled manually using the hand function on the VFD LCD. In the OFF position, the motor and VFD are disconnected. In the BYPASS position, the motor is operated at full speed form the AC power line. In case of an external safety fault, a customer supplied normally closed dry contact shall be able to stop the motor whether in DRIVE or BYPASS mode.

VII. SERVICE CONDITIONS

A. Ambient temperature, continuous, full speed, full load operation:
   i. VFD shall be available in enclosure types: UL Type 1 (NEMA 1) and IP20.
   ii. VFD shall be able to operate at full output current in the temperature range of 0 to 40°C (32 to 104°F).
   iii. VFD must be capable of operation at 50°C (122°F). The nameplate shall indicate any reduced VFD output current.
   iv. VFD shall be capable of operation to a minimum of -10°C (14°F) with reduced performance.

B. VFD shall be capable of operation in an environment with a relative humidity of 0% to 95%, non-condensing.
C. VFD shall be capable of operation up to an elevation to 1000m (3,280 feet) without de-rating.
D. VFD shall be capable of full output current with an AC line voltage variation of -10 to +10% from nominal input voltage.
E. All VFDs shall be plenum rated.
F. VFD shall require no side clearance for cooling. All power and control wiring shall be done from the bottom.

VIII. QUALITY ASSURANCE

A. To ensure quality, the VFD shall be tested by the manufacturer. The VFD shall drive a motor connected to a dynamometer at full load and speed and shall be cycled during the automated test procedure.

IX. SUBMITTALS

A. This specification lists the minimum VFD performance requirements for this project. Each supplier shall list any exceptions to the specification. If no departures from the specification are identified, the supplier shall be bound by the specification.
B. Total harmonic distortion level estimation. If requested, the manufacturer shall perform an analysis to initially demonstrate the supplied equipment will meet the IEEE 519-1992 recommendations after installation. In such instances, the owner or engineer shall provide the manufacturer with detailed electrical power single line diagram showing all impedances in the power path to the VFDs. Analysis shall provide the estimated total harmonic distortion levels. Point of common coupling shall be the secondary of the utility transformer. Any additional harmonic filtering equipment required to meet the IEEE 519-1992 recommendations shall not be the responsibility of the HVAC manufacturer.

X. EXECUTION

A. Start-up Service - The manufacturer shall provide start-up commissioning of the VFD and its optional circuits by a factory certified service technician who is experienced in start-up and repair services. Sales personnel and other agents who are not factory certified shall not be acceptable as commissioning agents. Start-up services shall include checking for verification of proper operation and installation for the VFD, its options and its interface wiring to the building automation system.
B. Warranty - The VFD shall be warranted by the manufacturer for a period of 36 months from initial start-up or 42 months from date of shipment, whichever is less. The warranty shall include replacement equipment or parts as well as a labor allowance for expenses incurred by the manufacturer to provide factory authorized on-site service.

END OF SECTION 237314

SECTION 238129

VARIABLE REFRIGERANT FLOW SYSTEM

PART 1 - GENERAL

1.1 SUMMARY

A. Section includes complete VRF HVAC system(s) which may include, but not limited to, the following components:

1. Indoor, recessed, ceiling-mounted units with 24x24” grilles.
2. Indoor, recessed, one-way ceiling-mounted units.
3. Outdoor, air-source heat recovery units.
4. VRF system controls.
5. VRF system refrigerant and oil.
6. VRF system condensate drain piping.
7. VRF system refrigerant piping.
8. VRF system control cable.

1.2 QUALITY ASSURANCE

A. Manufacturer Qualifications:

1. Nationally recognized manufacturer of VRF HVAC systems and products.
2. Shipped VRF HVAC systems with similar requirements to local market for a continuous period of **five 5 ye**ars within time of bid.
3. VRF HVAC systems and products that have been successfully tested and in use on at least **three** completed projects.
4. Having complete published online catalog literature, installation, and operation and maintenance manuals for all products intended for use. Resources must be publicly available without login or sign-in as registered account.
5. Having full-time in-house employees for the following:

    a. Product research and development.
    b. Product and application engineering.
    c. Product manufacturing, testing, and quality control.
    d. Technical support for system installation training, startup, commissioning, and troubleshooting of installations.
    e. Owner training.

B. Installer Qualifications: An entity that employs installers and supervisors who are trained and approved by VRF HVAC system manufacturer.

1. Each employee shall be certified to have successfully completed manufacturer

training for proper installation of systems, including, but not limited to, equipment, piping, controls, and accessories indicated and furnished for installation.
2. Installer certificate shall be valid and current for duration of Project.
3. Retain copies of Installer certificates on-site and make available on request.
4. Each person assigned to Project shall have demonstrated past experience.

   a. Demonstrated past experience with VRF products being installed for period within [**three**] consecutive years before time of bid.
   b. Demonstrated past experience on [**five**] projects of similar VRF system complexity, scope, and value.

C. ISO Compliance: System equipment and components furnished by VRF HVAC system manufacturer shall be manufactured in an ISO 9001 and ISO 14001 facility.

1.3 DELIVERY, STORAGE, AND HANDLING

A. Deliver and store products in a clean and dry place. Protect products from weather, dirt, dust, water, construction debris, and physical damage.

   1. Retain factory-applied coverings on equipment to protect finishes during construction and remove just prior to operating unit.

B. Cover unit openings before installation to prevent dirt and dust from entering inside of units. If required to remover coverings during unit installation, reapply coverings over openings after unit installation and remove just prior to operating unit.

C. Comply with manufacturer's written rigging and installation instructions for unloading and moving to final installed location.

1.4 WARRANTY

A. Manufacturer's Warranty: Manufacturer agrees to repair or replace equipment and components that fail(s) in materials or workmanship within specified warranty period.

   1. Failures include, but are not limited to, the following:

      a. Structural failures.
      b. Faulty operation.
      c. Deterioration of metals, metal finishes, and other materials beyond normal weathering and use.
   2. Warranty Period:

      a. For Compressor, [**Seven**] year(s) from date of Substantial Completion.
      b. For Parts, [**One**] year(s) from date of Substantial Completion.

B. Installer’s Labor Warranty: Installer agrees to repair or replace equipment and components that fail(s) in materials or workmanship within specified warranty period.

1. Warranty Period [**1**][**2**] year(s) from date of substantial completion.

PART 2 - PRODUCTS

2.1 VRF HVAC SYSTEMS

A. Manufacturers: Basis of design is CITY MULTI. Subject to compliance with requirements, provide products by one of the following brands only:

1. Mitsubishi Electric & Electronics USA, Inc.
2. Trane, Inc.
3. [**Toshiba Carrier Co., Ltd.**]
4. [**Daikin Applied**]
5. [**Johnson Controls, Inc.**]

2.2 SYSTEM DESCRIPTION

A. VRF HVAC system(s) with variable capacity in response to varying cooling and heating loads. System shall consist of multiple indoor units, outdoor unit(s), piping, controls, and electrical power to make complete operating system(s) complying with requirements indicated.

1. System(s) operation being heat pump or heat recovery as indicated on Drawings.
2. Each system with one refrigerant circuit serving all indoor units connected to system.

B. Electrical Components, Devices, and Accessories: Listed and labeled as defined in NFPA 70, by a qualified testing agency, and marked for intended location and application.

C. AHRI Compliance: System and equipment performance certified according to AHRI 1230-2023.

D. UL Compliance: Comply with UL 60335-2-40.

2.3 INDOOR, RECESSED, CEILING-MOUNTED UNITS WITH 24x24” GRILLES

A. Description: Factory-assembled and tested complete unit with components, piping, wiring, and controls required for mating to ductwork, piping, power, and controls field connections.

B. Cabinet:

1. Material: Painted steel, or coated steel frame covered by a plastic cabinet, with an architectural acceptable finish suitable for tenant occupancy on exposed surfaces.

2. Insulation: Manufacturer's standard internal insulation to provide thermal resistance and prevent condensation.
3. Internal Access: Removable panels of adequate size for field access to internal components for inspection, cleaning, service, and replacement.

C. Coil Assembly:

1. Coil Casing: Aluminum, galvanized, or stainless steel.
2. Coil Fins: Aluminum, mechanically bonded to tubes, with arrangement required by performance.
3. Coil Tubes: Copper, of diameter and thickness required by performance.
4. Capacity Control: DX coil by electronic modulating type valve with linear or proportional characteristics. Hydronic coil by modulating control valve.
5. Internal Tubing: Copper tubing with brazed joints.
6. Internal Tubing Insulation: Manufacturer's standard insulation, of thickness to prevent condensation.
7. Factory Charge: Dehydrated air or nitrogen.
8. Testing: Factory pressure tested and verified to be without leaks.

D. Drain Assembly:

1. Pan: Non-ferrous material, with bottom sloped to low point drain connection.
2. Condensate Removal: Unit-mounted integral lifting mechanism, capable of lifting drain water to an elevation above top of cabinet.
3. Field Piping Connection: Non-ferrous material.

E. Fan and Motor Assembly:

1. Fan(s):

   a. Direct-drive arrangement.
   b. Single or multiple fans connected to a common motor shaft and driven by a single motor.
   c. Fabricated from non-ferrous components or ferrous components with corrosion protection finish.
   d. Wheels statically and dynamically balanced.

2. Motor: Brushless DC or electronically commutated with permanently lubricated bearings.
3. Motor Protection: Integral protection against thermal, overload, and voltage fluctuations.
4. Speed Settings and Control: Multiple or variable speed with speed setting adjustable via central or wall controllers when present.
5. Vibration Control: Integral isolation to dampen vibration transmission.

F. Filter Assembly:

1. Access: Bottom, to accommodate filter replacement without the need for tools.
2. Media: Washable screen.

G. Return/Discharge-Air Grille Assembly: Attached to bottom of unit cabinet.

1. Discharge Pattern: Four-way throw.

a. Discharge Pattern Adjustment: Field-adjustable settings for up and down range of motion for individual vanes. Provide Deluxe controller to enable configuration.

2. Motorized Vanes: Modulating up and down flow pattern for uniform room air distribution.

H. Integral Occupant and Location Detection: Unit includes occupant and location detection for automatic air distribution and energy saving setback control in the following manner-

1. Air Distribution

a. [**Default distribution operation: Integral occupant and location detection will not be utilized to control air distribution. During COOL mode, vanes move to horizontal airflow direction. During HEAT mode, vanes move to down airflow direction**.]
b. [**Direct/Indirect: Vanes automatically move relative to the quadrant(s) where persons are detected**.]
c. [**Area: Vanes move to down airflow direction toward areas with a high floor temperature during COOL mode and toward areas with a low floor temperature during HEAT mode. Otherwise, vanes move to the horizontal airflow direction**.]

2. Energy Saving

a. [**Default energy operation: Integral occupant and location detection will not be utilized to automatically enable setback or mode changes. Set point and setback and mode determined by wall controller or central control when provided**.]
b. [**"No occupancy energy save": If there are no persons in the room for 60 minutes or more, energy saving operation (setback) equal to 4°F is performed**.]
c. [**"Room occupancy energy save": If occupancy rate decreases to approximately 30% of the maximum occupancy rate, energy saving operation (setback) equal to 2°F is performed**.]
d. [**No occupancy Auto-OFF: If no persons are in the room for set amount of time (60–180 minutes), MODE is automatically changed (OFF, COOL, or HEAT)**.]

I. Outdoor Air Ventilation Connection: Sheet metal knockout for optional connection to outdoor air ventilation duct.

J. Field-Installed Unit Accessories:

1. [**Accessory grille with integral occupancy and location sensor**.]
2. [**Condensate pump capable of at least 10 feet of lift**.]

K. Unit Controls:

1. Factory-Installed Sensors:

   a. Unit inlet air temperature.
   b. Coil entering refrigerant temperature.
   c. Coil leaving refrigerant temperature.

2. Interlock control sequence: Four digital inputs and three digital outputs for use in defined or customizable interlock sequences; relay adapter kits may be required. Required interlock sequence(s) include-

   a. [**backup heat control**.]
   b. [**humidifier control**.]
   c. [**on/off control**.]
   d. [**on/off and fault status**.]
   e. [**mode and fan status**.]
   f. [**indoor unit float switch connection**.]
   g. [**branch controller float switch connection**.]
   h. [**fan speed control**.]
   i. [**forced fan operation**.]

3. Features and Functions:

   a. Integral occupancy and location sensor.
   b. Time delay.
   c. Auto-restart.
   d. Auto operation mode.
   e. Manual operation mode.
   f. Filter service notification.
   g. Drain assembly high water level safety shutdown and notification.
   h. Run test switch.

L. Unit Electrical:

1. Field Connection: Single point connection to power entire unit and integral controls.
2. Disconnecting Means: Field-installed circuit breaker or switch, complying with NFPA 70.

2.4 INDOOR, RECESSED, ONE-WAY CEILING-MOUNTED UNITS

A. Description: Factory-assembled and tested complete unit with components, piping, wiring, and controls required for mating to ductwork, piping, power, and controls field connections.

B. Cabinet:

1. Material: Painted steel, or coated steel frame covered by a plastic cabinet, with an architectural acceptable finish suitable for tenant occupancy on exposed surfaces.
2. Insulation: Manufacturer's standard internal insulation to provide thermal resistance and prevent condensation.
3. Internal Access: Removable panels of adequate size for field access to internal components for inspection, cleaning, service, and replacement.

C. Coil Assembly:

1. Coil Casing: Aluminum, galvanized, or stainless steel.
2. Coil Fins: Aluminum, mechanically bonded to tubes, with arrangement required by performance.
3. Coil Tubes: Copper, of diameter and thickness required by performance.
4. Capacity Control: DX coil by electronic modulating type valve with linear or proportional characteristics.
5. Internal Tubing: Copper tubing with brazed joints.
6. Internal Tubing Insulation: Manufacturer's standard insulation, of thickness to prevent condensation.
7. Factory Charge: Dehydrated air or nitrogen.
8. Testing: Factory pressure tested and verified to be without leaks.

D. Drain Assembly:

1. Pan: Non-ferrous material, with bottom sloped to low point drain connection.
2. Condensate Removal: Unit-mounted integral lifting mechanism, capable of lifting drain water to an elevation above top of cabinet.
3. Field Piping Connection: Non-ferrous material.

E. Fan and Motor Assembly:

1. Fan(s):

   a. Direct-drive arrangement.
   b. Single or multiple fans connected to a common motor shaft and driven by a single motor.
   c. Fabricated from non-ferrous components or ferrous components with corrosion protection finish.
   d. Wheels statically and dynamically balanced.

2. Motor: PSC, Brushless DC or electronically commutated with permanently lubricated bearings.
3. Motor Protection: Integral protection against thermal, overload, and voltage fluctuations.
4. Speed Settings and Control: Multiple or variable speed with speed setting adjustable via central or wall controllers when present.
5. Vibration Control: Integral isolation to dampen vibration transmission.

F. Filter Assembly:

1. Access: Bottom, to accommodate filter replacement without the need for tools.
2. Media: Washable screen.

G. Return/Discharge-Air Grille Assembly: Attached to bottom of unit cabinet.

1. Discharge Pattern: One-way throw.

a. Discharge Pattern Adjustment: Field-adjustable settings for up and down range of motion for individual vanes.

2. Motorized Vanes: Modulating up and down flow pattern for uniform room air distribution.

H. Outdoor Air Ventilation Connection: Sheet metal knockout for optional connection to outdoor air ventilation duct.

I. Field-Installed Unit Accessories:

1. [**Condensate pump capable of at least 10 feet of lift**.]

J. Unit Controls:

1. Factory-Installed Sensors:

a. Unit inlet air temperature.
b. Coil entering refrigerant temperature.
c. Coil leaving refrigerant temperature.

2. Interlock control sequence: Four digital inputs and three digital outputs for use in defined or customizable interlock sequences; relay adapter kits may be required. Required interlock sequence(s) include-

a. [**backup heat control**.]
b. [**humidifier control**.]
c. [**on/off control**.]
d. [**on/off and fault status**.]
e. [**mode and fan status**.]
f. [**indoor unit float switch connection**.]
g. [**branch controller float switch connection**.]
h. [**fan speed control**.]
i. [**forced fan operation**.]

3. Features and Functions:

a. Integral occupancy and location sensor.
b. Time delay.
c. Auto-restart.

d. Auto operation mode.
e. Manual operation mode.
f. Filter service notification.
g. Drain assembly high water level safety shutdown and notification.
h. Run test switch.

K. Unit Electrical:

1. Field Connection: Single point connection to power entire unit and integral controls.
2. Disconnecting Means: Field-installed circuit breaker or switch, complying with NFPA 70.

2.5 OUTDOOR, AIR-SOURCE HEAT RECOVERY UNITS

A. Description: Factory-assembled and tested complete unit designed for use in systems with simultaneous heating and cooling.

1. Systems shall consist of one unit, or multiple unit modules that are designed by variable refrigerant system manufacturer for field interconnection to make a single refrigeration circuit, heat recovery control unit(s), and multiple indoor units.

B. Cabinet:

1. Galvanized steel and coated with a corrosion-resistant finish.

a. Coating with documented salt spray test performance of 1000 hours according to ASTM B117 surface scratch test (SST) procedure.

2. Internal Access: Removable panels or hinged doors of adequate size for field access to internal components for inspection, cleaning, service, and replacement.

C. Compressor and Motor Assembly:

1. One or more positive-displacement, direct-drive and hermetically sealed scroll compressor(s) with inverter drive. Non-inverter compressors—where LRA applies—are not allowed.
2. [**Cold-Climate Compressor: Hot gas injection to allow increased compression ratio for extended periods without damage or excessive wear**.]
3. Protection: Integral protection against the following-

a. Refrigerant overcharge and undercharge
b. High and low refrigerant pressure.
c. High refrigerant and oil temperature.
d. Liquid flood back.
e. Thermal and overload.

f. Voltage fluctuations.
g. Phase failure and phase reversal.
h. Short cycling.

4. Speed Control: Configurable to maintain refrigerant evaporating and condensing temperatures while varying refrigerant flow to satisfy cooling and heating loads.

a. Cooling mode fixed 32°F evaporator temperature.
b. Cooling mode fixed 43°F evaporator temperature.
c. Cooling mode variable 32-48°F evaporator temperature.
d. Heating mode high COP operation.
e. Heating mode high heating output operation.

5. Vibration Control: Integral isolation to dampen vibration transmission.
6. Oil Management: Timed sequence enabled during extended periods of reduced refrigerant flow to ensure proper lubrication over entire operating range. Sequences which rely on sensing oil level risk sensor failure or sensor placement not accounting for line length and are not allowed.
7. Crankcase heaters with integral control to maintain safe operating temperature.
8. Fusible plug.

D. Heat-Exchanger Assembly: Documented salt spray test performance of 1000 hours according to ASTM B117 surface test (SST) procedure.

1. Plate Fin Coils:

a. Casing: Aluminum, galvanized, or stainless steel.
b. Fins: Aluminum or copper, mechanically bonded to tubes, with arrangement required by performance.
c. Tubes: Copper, of diameter and thickness required by performance.

2. Zinc-Coated Aluminum Microchannel Coils:

a. Series of flat tubes containing a series of multiple, parallel flow microchannels layered between refrigerant header manifolds.
b. Construct fins, tubes, and header manifolds of aluminum alloy.
c. Provide coil panel heaters for heating operation below 0°F per Drawings.

E. Heat-Exchanger Defrost Strategy:

1. Alternate methods based on ambient temperatures.

a. Hot-gas method to maximize efficiency during mild ambient temperatures. Method prolongs defrost sequence.

1) Segmented coil (single-module systems) or alternating modules (twinned systems) to deliver simultaneous defrost and HEAT delivery indoors.

b. Reverse-cycle method to maximize comfort during extreme ambient temperatures. Method shortens defrost sequence.

1) Leverage below 33.8°F for single-module systems and below 23°F for twinned systems to deliver shorter defrost cycles.

2. Preheat Defrost Operation: Signal to indoor units operating in HEAT to increase space temperature before the start of defrost sequence.

F. Heat-Exchanger Fan and Motor Assembly:

1. Fan(s): Propeller type.

a. Direct-drive arrangement.
b. Fabricated from non-ferrous components.
c. Statically and dynamically balanced.

2. Fan Guards: Removable safety guards complying with OSHA regulations. If using metal materials, coat with corrosion-resistant coating to match performance indicated for heat exchanger coil.
3. Motor(s): Brushless DC or electronically commutated with permanently lubricated bearings and rated for outdoor duty.
4. Motor Protection: Integral protection against thermal, overload, and voltage fluctuations.

G. Field-Installed Unit Accessories:

1. [**Low Ambient Cooling Kit: Provide heat-exchanger coil wind deflectors and fan hood assembly for low ambient cooling operation to -10°F as indicated in Drawings**.]
2. [**Snow/Hail Protection Kit: Provide heat exchanger coil guards and fan hoods to protect against hail damage**.]
3. [**Refrigerant Filter/Cleaning System: Replaceable filter core in bypass arrangement from main suction flow to enhance installation quality assurance**.]
4. [**Open-Design Equipment Support Stand: Adjustable 13-17” height**.]
5. [**Adjustable 13-26” height, Open-Design Equipment Support Stand**.]

H. Unit Controls:

1. Enclosure: Manufacturer's standard, and suitable for unprotected outdoor locations.
2. Factory-Installed Controller: Configurable digital control.

3. Factory-Installed Sensors:

a. Refrigerant suction temperature.
b. Refrigerant discharge temperature.
c. Outdoor air temperature.

d. Refrigerant high pressure.
e. Refrigerant low pressure.

4. Features and Functions: Self-diagnostics, time delay, auto-restart.

5. Interlock control sequence: Customizable operation based on external input or contact closure. Required interlock sequence(s) include-

a. [**Multi-stage demand limit**.]
b. [**Low noise (nighttime) limit**.]
c. [**Lock COOL or HEAT mode**.]
d. [**Compressor on/off and fault status**.]

I. Unit Electrical:

1. Field Connection: Single point connection to power each unit module and integral controls.
2. Disconnecting Means: Field-installed circuit breaker or switch, complying with NFPA 70.

2.6 VRF SYSTEM CONTROLS

A. General Requirements:

1. Network: Indoor units and outdoor units shall include integral controls and connect through a manufacturer-selected control network.
2. Network Communication Protocol: Manufacturer proprietary control communication between interconnected units.
3. Integration with Building Automation System: ASHRAE 135, BACnet IP and certified by BACnet Testing Lab (BTL), including the following-

a. Ethernet connection via RJ-45 connectors and port with transmission at [**100**] Mbps or higher.
b. Integration shall include [**control**][**monitoring**][**scheduling**][**change of value notifications**]

4. Operator Interface:

a. Operators shall interface with system and unit controls through the following:

1) Operator interfaces integral to controllers
2) [**Manufacturer-provided central controller**.]
3) [**Integration with Building Automation System**.]
4) [**Secure-cloud access through web browser software with 1-year prepaid service subscription**.]

b. Users shall be capable of interface with controllers for indoor units' control

to extent privileges are enabled. Control features available to users shall include the following:

1) On/off control.
2) Temperature set-point adjustment.
3) Fan speed control.

c. [**Interface via secure-cloud access shall allow downloading of system diagnostic information, viewable system diagnostic charts, and email notification of error codes**.]

B. VRF HVAC System Operator Interface via PC:

1. Central controller(s) connected local-area-network shall be accessible through standard web browser software requiring no manufacturer-specific software be installed on owner-furnished PC.
2. Browser interface shall provide operator with a graphic user interface to allow monitoring and control of multiple central controllers from a single device location through point-and-click mouse exchange.
3. Plan views shall show building plans with location of indoor units and identification superimposed on plans.
4. Controls operation mode of indoor units as individual units, by selected groups of indoor units, or as collection of all indoor units. Operation modes available through central controller shall match those operation modes of controllers for indoor units.
5. Schedules operation of indoor units as individual units, by selected groups of indoor units, or as collection of all indoor units. Schedules daily, weekly, and annual events.
6. Changes operating set points of indoor units as individual units, by selected groups of indoor units, or as collection of all indoor units.
7. Night setback feature to operate indoor units at energy-conserving heating and cooling temperature set-points during unoccupied periods.
8. Supports Multiple Languages: English, French, or Spanish.
9. Supports Imperial and Metric Temperature Units
10. Displays service notifications and error codes.
11. Monitors and displays cumulative operating time of indoor units.
12. Able to disable and enable operation of individual controllers for indoor units.
13. Information displayed on individual controllers shall also be available for display.

C. Central Controllers:

1. Centralized control for all indoor and outdoor units from a single central controller location.

   a. Include multiple interconnected controllers as required.
   b. [**Include backlit, high-resolution color display touch panel**.]

2. Controls operation mode of indoor units as individual units, by selected groups of indoor units, or as collection of all indoor units. Operation modes available

through central controller shall match those operation modes of controllers for indoor units.

3. Schedule operation of indoor units as individual units, by selected groups of indoor units, or as collection of all indoor units.

    a. Sets schedule for daily, weekly, and annual events.
    b. Schedule options available through central controller shall at least include the schedule options of controllers for indoor units.

4. Changes operating set points of indoor units as individual units, by selected groups of indoor units, or as collection of all indoor units.
5. Optimized start feature to start indoor units before scheduled time to reach temperature set-point at scheduled time based on operating history.
6. Night setback feature to operate indoor units at energy-conserving heating and cooling temperature set-points during unoccupied periods.
7. Able to disable and enable operation of individual controllers for indoor units.
8. Information displayed on individual controllers shall also be available for display through central controller.
9. Multiple RJ-45 ports for direct connection to a local PC and an Ethernet network switch.
10. Start/stop control capability for third-party equipment as required.
11. [**Accessory surface-mount case**.]
12. [**Accessory recess-mount case (for use in 3-1/2” wall cavity)**.]
13. [**DIN rail mounting kit for installation of central controller in an enclosure**.]
14. [**License for Integration with Building Automation System: BACnet over IP communication of indoor unit monitor and control points**.]
15. [**Niagara Driver for direct BMS connection to central controller(s) for enhanced data set including indoor unit and control points plus outdoor unit monitor points in lieu of BACnet license**.]

D. Wired Controllers and Sensors for Indoor Units

1. Simple Controllers for Indoor Units:

    a. Single controller capable of controlling multiple indoor units as group.
    b. Integral room temperature sensor
    c. Temperature Units: Fahrenheit and Celsius.
    d. On/Off: Turns indoor unit on or off.
    e. Operation Mode: Cool, Heat, Auto, Dehumidification, Fan Only.
    f. Temperature Display and Set-Point: Separate set points for Cooling, Heating. Adjustable in 1-degree Fahrenheit increments between.
    g. Fan Speed Setting: Select between available options furnished with unit.
    h. Airflow Direction Setting: If applicable to indoor unit style, select between available options furnished with the unit.
    i. Service Notification Display: "Filter".
    j. Error Code Notification Display: Used by service personnel to troubleshoot abnormal operation and equipment failure.
    k. Low-voltage power required for controller shall be powered through non-polar connections to indoor unit.

2. Residential / Multi-Family Style Controllers for Indoor Units:

    a. Wall-mounted controller with integral room temperature and humidity sensors and adapter providing connection to indoor unit.
    b. Color LCD with click-wheel operation and Proximity Sensor to wake controller screen when approached.
    c. Automatic switching between Cool and Dry modes to meet target humidity level (user-selectable between 35-75%).
    d. Temperature Units: Fahrenheit and Celsius.
    e. On/Off: Turns indoor unit on or off.
    f. Hold: Hold operation settings until hold is released.
    g. Operation Mode: Cool, Heat, Auto, Dehumidification, Fan Only, and Setback.
    h. Temperature Display and Set-Point: Separate set points for Cooling, Heating. Adjustable in 1-degree Fahrenheit increments between.
    i. Fan Speed Setting: Select between available options furnished with unit.
    j. Airflow Direction Setting: If applicable to indoor unit style, select between available options furnished with the unit.
    k. Seven-day programmable operating schedule with up to five events per day. Operations shall include On/Off, Operation Mode, and Temperature Set-Point.
    l. Error Code Notification Display: Used by service personnel to troubleshoot abnormal operation and equipment failure.
    m. User and Service Passwords: Capable of preventing adjustments by unauthorized users.
    n. Setting stored in nonvolatile memory to ensure that settings are not lost if power is lost.
    o. Low-voltage power required for controller shall be powered through polarity-specific connections to indoor unit.
    p. Limits central control (when present) to monitor-only functionality.

3. Deluxe Controllers for Indoor Units:

    a. Single controller capable of controlling multiple indoor units as group.
    b. Integral room temperature sensor
    c. Configurable LCD Touch Screen with Auto Timeout: Timeout duration shall be adjustable.
    d. Temperature Units: Fahrenheit and Celsius.
    e. On/Off: Turns indoor unit on or off.
    f. Hold: Hold operation settings until hold is released.
    g. Operation Mode: Cool, Heat, Auto, Dehumidification, Fan Only, and Setback.
    h. Temperature Display and Set-Point: Separate set points for Cooling, Heating. Adjustable in 1-degree Fahrenheit increments between.
    i. Fan Speed Setting: Select between available options furnished with unit.
    j. Airflow Direction Setting: If applicable to indoor unit style, select between available options furnished with the unit.
    k. Seven-day programmable operating schedule with up to five events per day. Operations shall include On/Off, Operation Mode, and Temperature

Set-Point.

l. Auto Off Timer: Operates unit for an adjustable time duration and then turns unit off.
m. Service Notification Display: "Filter".
n. Service Run Tests: Limit use by service personnel to troubleshoot operation.
o. Error Code Notification Display: Used by service personnel to troubleshoot abnormal operation and equipment failure.
p. User and Service Passwords: Capable of preventing adjustments by unauthorized users.
q. Setting stored in nonvolatile memory to ensure that settings are not lost if power is lost.
r. Low-voltage power required for controller shall be powered through non-polar connections to indoor unit.

4. Color Touch Screen Controllers with Bluetooth Connectivity for Indoor Units:

a. Single controller capable of controlling multiple indoor units as group.
b. Integral room temperature sensor
c. Configurable color LCD Touch Screen with Auto Timeout: import custom image, timeout duration shall be adjustable.
d. Configurable and controller via mobile app via Bluetooth™; Bluetooth shall have rotating security PIN.
e. Temperature Units: Fahrenheit and Celsius.
f. On/Off: Turns indoor unit on or off.
g. Hold: Hold operation settings until hold is released.
h. Operation Mode: Cool, Heat, Auto, Dehumidification, Fan Only, and Setback.
i. Temperature Display and Set-Point: Separate set points for Cooling, Heating. Adjustable in 1-degree Fahrenheit increments between.
j. Fan Speed Setting: Select between available options furnished with unit.
k. Airflow Direction Setting: If applicable to indoor unit style, select between available options furnished with the unit.
l. Seven-day programmable operating schedule with up to five events per day. Operations shall include On/Off, Operation Mode, and Temperature Set-Point.
m. Auto Off Timer: Operates unit for an adjustable time duration and then turns unit off.
n. Service Notification Display: "Filter".
o. Service Run Tests: Limit use by service personnel to troubleshoot operation.
p. Error Code Notification Display: Used by service personnel to troubleshoot abnormal operation and equipment failure.
q. User and Service Passwords: Capable of preventing adjustments by unauthorized users.
r. Setting stored in nonvolatile memory to ensure that settings are not lost if power is lost.
s. Low-voltage power required for controller shall be powered through non-polar connections to indoor unit.

5. Touch Controllers with Integral Occupancy and Light Sensing for Indoor Units:

    a. Single controller capable of controlling multiple indoor units as group.
    b. Integral room temperature, humidity, light and occupancy sensors.
    c. Multiple configurable automatic energy-save strategies by integral occupancy sensor (e.g., unit off, unit setback, fan mode, set point ± 4°F).
    d. Light sensor may be used to disable energy-save by occupancy sensing.
    e. Configurable color LED operation indication.
    f. LCD Touch Screen with Auto Timeout: Timeout duration shall be adjustable.
    g. Temperature Units: Fahrenheit and Celsius.
    h. On/Off: Turns indoor unit on or off.
    i. Hold: Hold operation settings until hold is released.
    j. Operation Mode: Cool, Heat, Auto, Dehumidification, Fan Only, and Setback.
    k. Temperature Display and Set-Point: Separate set points for Cooling, Heating. Adjustable in 1-degree Fahrenheit increments between.
    l. Fan Speed Setting: Select between available options furnished with unit.
    m. Airflow Direction Setting: If applicable to indoor unit style, select between available options furnished with the unit.
    n. Seven-day programmable operating schedule with up to five events per day. Operations shall include On/Off, Operation Mode, and Temperature Set-Point.
    o. Auto Off Timer: Operates unit for an adjustable time duration and then turns unit off.
    p. Service Notification Display: "Filter".
    q. Service Run Tests: Limit use by service personnel to troubleshoot operation.
    r. Error Code Notification Display: Used by service personnel to troubleshoot abnormal operation and equipment failure.
    s. User and Service Passwords: Capable of preventing adjustments by unauthorized users.
    t. Setting stored in nonvolatile memory to ensure that settings are not lost if power is lost.
    u. Low-voltage power required for controller shall be powered through non-polar connections to indoor unit.

6. Conventional Thermostat Interface and Thermostat

    a. Provide with <**insert thermostat brand and model**> and 24V transformer to power thermostat.
    b. Indoor unit modes: COOL, HEAT, FAN, and OFF (AUTO function only at thermostat level).
    c. Three input terminals to control fan speed control:

        1) High.
        2) Medium.
        3) Low.

d. Auto recovery after power failure.
e. Limits central control (when present) to monitoring mode status and error alarm only.

7. Wired Sensor-Only for Indoor Units:

a. [**Surface-mount**][**Paintable, flush-mount**] sensors in lieu of local controllers.

E. Wireless Controllers for Indoor Units:

1. Wireless Wall-Mounted Controllers for Indoor Units:

a. Wall-mounted controller with integral room temperature sensor and receiver providing connection to indoor unit.
b. Temperature sensing shall be [**integral sensor within controller**][**indoor unit return sensor**][**accessory wireless sensor**][**averaged integral sensor and accessory wireless sensor**].
c. Temperature Units: Fahrenheit and Celsius.
d. On/Off: Turns indoor unit on or off.
e. Hold: Hold operation settings until hold is released.
f. Operation Mode: Cool, Heat, Auto, Dehumidification, Fan Only, and Setback.
g. Temperature Display and Set-Point: Separate set points for Cooling, Heating. Adjustable in 1-degree Fahrenheit increments between.
h. Fan Speed Setting: Select between available options furnished with unit.
i. Airflow Direction Setting: If applicable to indoor unit style, select between available options furnished with the unit.
j. Seven-day programmable operating schedule with up to five events per day. Operations shall include On/Off, Operation Mode, and Temperature Set-Point.
k. Service Notification Display: "Filter".
l. User and Service Passwords: Capable of preventing adjustments by unauthorized users.
m. Setting stored in nonvolatile memory to ensure that settings are not lost if power is lost.
n. Two AA alkaline batteries (supplied with controller) required for controller power.
o. Receiver connects to indoor unit control board with 1 m cable.
p. Limits central control (when present) to monitor-only functionality.

2. Handheld Wireless Controllers for Indoor Units:

a. Controller communicates to remote-mounted receiver that is wired to indoor unit(s).

1) Include receivers with handheld wireless controllers as required to complete installation.
2) Low-voltage power required for receivers shall be powered by indoor

unit.

b. One handheld wireless controller shall be capable of communicating with one or multiple receivers to control one or multiple indoor units as a group.
c. Temperature Units: Fahrenheit and Celsius.
d. On/Off: Turns indoor unit on or off.
e. Operation Mode: Cool, Heat, Auto, Dehumidification, and Fan Only.
f. Fan Speed Setting: Select between available options furnished with indoor unit.
g. Airflow Direction Setting: If applicable to unit, select between available options furnished with indoor unit.
h. Auto Off Timer: Operates unit for an adjustable time duration and then turns unit off.
i. Service Run Tests: Limit use by service personnel to troubleshoot operation.
j. Receiver Error Notification LED: Used by service personnel to troubleshoot abnormal operation and equipment failure.

2.7 VRF SYSTEM REFRIGERANT AND OIL

A. Refrigerant:

1. As required by VRF HVAC system manufacturer for system to comply with performance requirements indicated.
2. ASHRAE 34, Class A1 refrigerant classification.
3. R-410a

B. Oil:

1. As required by VRF HVAC system manufacturer and to comply with performance requirements indicated.

2.8 VRF SYSTEM CONDENSATE DRAIN PIPING

A. If more than one material is listed, material selection is Contractor's option.

B. Copper Tubing:

1. Drawn-Temper Tubing: According to [**ASTM B88, Type L (ASTM B88M, Type B)**][**ASTM B88, Type M (ASTM B88M, Type C)**] or Type DWV according to ASTM B306.
2. Wrought-Copper Fittings: ASME B16.22.
3. Wrought-Copper Unions: ASME B16.22.
4. Solder Filler Metals: ASTM B32, lead-free alloys, and water-flushable flux according to ASTM B813.

C. CPVC plastic pipe according to ASTM F441/F441M, Schedule 40, with socket-type pipe fittings according to ASTM F438 and solvent cement according to ASTM F493.

D. PVC plastic pipe according to ASTM D1785, Schedule 40, with socket-type pipe fittings according to ASTM D2466 and solvent cement according to ASTM D2564, primer according to ASTM F656.

E. Reducers: Where applied to piping connected to unit-mounted integral lifting mechanism, only eccentric reducers oriented horizontally are allowed.

2.9 VRF SYSTEM REFRIGERANT PIPING

A. Refrigerant Piping:

1. Copper Tube: ASTM B280, Type ACR.
2. Wrought-Copper Fittings: ASME B16.22.
3. Brazing Filler Metals: AWS A5.8/A5.8M.

B. Refrigerant Tubing Kits:

1. Factory-rolled and -bundled, soft-copper tubing with tubing termination fittings at each end.
2. Standard one-piece length for connecting to indoor units.
3. Pre-insulated with flexible elastomeric insulation of thickness to comply with governing energy code and sufficient to eliminate condensation.
4. Factory Charge: dehydrated air or nitrogen.

C. Assemblies and Specialties:

1. Divided-Flow Specialty Fittings: Where required by VRF HVAC system manufacturer for proper system operation, VRF HVAC system manufacturer shall furnish specialty fittings with identification and instructions for proper installation by Installer.
2. [**Refrigerant Isolation Ball Valves: Uni-body full port design with Schrader valve for refrigerant service, rated for maximum system temperature and not less than 800 psig pressure, and factory tested under pressure to ensure tight shutoff**.]

2.10 VRF SYSTEM CONTROL CABLE

A. General Requirements: Refer to and verify all wire and cabling requirements with the manufacturer's current installation and operation manuals to ensure compliance with the latest standards and specifications. Cables may not be spliced and shall be continuous from terminal to terminal. Do not splice cable.

B. Low-Voltage Control Network Cabling:

1. Plenum-Rated, Paired Cable: NFPA 70, Type CMP.

    a. Shielded wire (2-core) 16 AWG—CVVS, CPEVS or MVVS.
    b. PVC insulation and jacket.
    c. Foil shielded.
    d. Flame Resistance: Comply with NFPA 262.
    e. Maximum cable distance (distance to farthest components) is **1,640 feet**.
    f. Maximum cable distance from OU to connected IU is **656 feet**.
    g. Maximum total cable length (sum of all network cabling) is **6,560 feet**.

C. Low-Voltage Wall-Mounted Controller Cabling to Indoor Units:

1. Plenum-Rated, Paired Cable: NFPA 70, Type CMP.

    a. 22 AWG, 2-conductor unshielded 7-stranded bare copper wire.

        1) Residential / multi-family style controllers require 4-conductor.
        2) Touch controllers with integral occupancy and light sensing controllers require low-voltage control network cabling to the network.

    b. PVC insulation and jacket.
    c. Flame Resistance: Comply with NFPA 262.
    d. Maximum cable distance (distance from controller to indoor unit) varies by controller style. Refer to manufacturer Submittal or Installation Guides.

D. Transmission power booster provided if additional signal power is required based on connected devices. Coordinate with VRF manufacturer and install near middle of communication bus when required.

PART 3 - EXECUTION

3.1 EXAMINATION

A. Examine substrates, areas, and conditions, with Installer present, for compliance with requirements for installation tolerances and other conditions affecting performance of the Work.

B. Examine products before installation. Reject products that are wet, moisture damaged, or mold damaged.

C. Examine roughing-in for piping and tubing to verify actual locations of connections before equipment installation.

D. Examine roughing-in for ductwork to verify actual locations of connections before equipment installation.

E. Examine roughing-in for wiring and conduit to verify actual locations of connections before equipment installation.

F. Examine walls, floors, roofs, and outdoor pads for suitable conditions where equipment will be installed.

G. Prepare written report, endorsed by Installer, listing conditions detrimental to performance of the Work.

H. Proceed with installation only after unsatisfactory conditions have been corrected.

3.2 EQUIPMENT INSTALLATION, GENERAL

A. Clearance:

1. Maintain manufacturer's recommended clearances for service and maintenance.
2. Maintain clearances required by governing code.

B. Equipment Restraint Installation: Install equipment with seismic-restraint device. Comply with requirements for seismic-restraint devices specified in Section 230548 "Vibration and Seismic Controls for HVAC."

3.3 INSTALLATION OF INDOOR UNITS

A. Install units to be level and plumb while providing a neat and finished appearance.

B. Unless otherwise required by VRF HVAC system manufacturer, support ceiling-mounted units from structure above using threaded rods; minimum rod size of **3/8 inch (10 mm)**.

C. Adjust supports of exposed and recessed units to draw units tight to adjoining surfaces.

D. Protect finished surfaces of ceilings, floors, and walls that come in direct contact with units. Refinish or replaced damaged areas after units are installed.

E. In rooms with ceilings, conceal piping and tubing, controls, and electrical power serving units above ceilings.

F. In rooms without ceiling, arrange piping and tubing, controls, and electrical power serving units to provide a neat and finished appearance.

G. Provide lateral bracing if needed to limit movement of suspended units to not more than [**0.25 inch (13 mm)**]

3.4 INSTALLATION OF OUTDOOR UNITS

A. Install units to be level and plumb while providing a neat and finished appearance.

B. Install outdoor units on support structures indicated on Drawings.

C. Roof-Mounted Installations: Install outdoor units on equipment supports specified in Section 077200 "Roof Accessories." Anchor units to supports with removable, stainless-steel fasteners.

3.5 GENERAL REQUIREMENTS FOR PIPING INSTALLATION

A. Drawing plans, schematics, and diagrams indicate general location and arrangement of piping and tubing systems. Install piping and tubing as indicated unless deviations to layout are approved on coordination drawings.

B. Install piping and tubing in concealed locations unless otherwise indicated and except in equipment rooms and service areas.

C. Install piping and tubing at right angles or parallel to building walls. Diagonal runs are prohibited unless specifically indicated otherwise.

D. Install piping and tubing above accessible ceilings to allow sufficient space for ceiling panel removal.

E. Install piping and tubing to permit valve servicing.

F. Install piping and tubing at indicated slopes.

G. Install piping and tubing free of sags.

H. Install fittings for changes in direction and branch connections.

I. Install piping and tubing to allow application of insulation.

J. Install groups of pipes and tubing parallel to each other, spaced to permit applying insulation with service access between insulated piping and tubing.

K. Install sleeves for piping and tubing penetrations of walls, ceilings, and floors. Comply with requirements for sleeves specified in Section 230500 "Common Work Results for HVAC."

L. Install escutcheons for piping and tubing penetrations of walls, ceilings, and floors. Comply with requirements for escutcheons specified in Section 230500 "Common Work Results for HVAC."

3.6 INSTALLATION OF SYSTEM CONDENSATE DRAIN PIPING

A. General Requirements for Drain Piping and Tubing:

1. Install a union in piping at each threaded unit connection.
2. Install an adjustable stainless steel hose clamp with adjustable gear operator on unit hose connections. Tighten clamp to provide a leak-free installation.

3. If required for unit installation, provide a trap assembly in drain piping to prevent air circulated through unit from passing through drain piping. Comply with more stringent of the following:

    a. Details indicated on Drawings.
    b. Manufacturer's requirements.
    c. Governing codes.
    d. In the absence of requirements, comply with requirements of ASHRAE handbooks.

4. Extend drain piping from units with drain connections to drain receptors as indicated on Drawings. If not indicated on Drawings, terminate drain connection at nearest accessible location that is not exposed to view by occupants.
5. Provide each 90-degree change in direction with a Y- or T-fitting. Install a threaded plug connection in the dormant side of fitting or future use as a service cleanout.

B. Gravity Drains:

1. Slope piping from unit connection toward drain termination at a constant slope of not less than one percent.

C. Pumped Drains:

1. If unit condensate pump or lift mechanism is not included with an integral check valve, install a full-size check valve in each branch pipe near unit connection to prevent backflow into unit.

3.7 INSTALLATION OF REFRIGERANT PIPING

A. Refrigerant Tubing Kits:

1. Unroll and straighten tubing to suit installation. Deviations in straightness of exposed tubing shall be unnoticeable to observer.
2. Support tubing as specified in Section 230516 “Hangers and Supports for HVAC Piping and Equipment.”
3. Prepare tubing ends and make mating connections to provide a pressure tight and leak-free installation.

B. Select system components with minimum **650 psig** pressure rating.

C. Install piping as short and direct as possible, with a minimum number of joints and fittings.

D. Arrange piping to allow inspection and service of equipment. Install valves and specialties in accessible locations to allow for service and inspection. Install access doors or panels as specified in Section 083113 "Access Doors and Frames" if valves or equipment requiring maintenance is concealed behind finished surfaces.

E. Install refrigerant piping and tubing in protective conduit where installed below ground.

F. Install refrigerant piping and tubing in rigid or flexible conduit in locations where exposed to mechanical damage.

G. Unless otherwise required by VRF HVAC system manufacturer, slope refrigerant piping and tubing as follows:

1. Install horizontal hot-gas discharge piping and tubing with a uniform slope downward away from compressor.
2. Install horizontal suction lines with a uniform slope downward to compressor.
3. Traps to entrain oil in vertical runs are not allowed.
4. Inverted traps for twinned systems may be required by manufacturer.
5. Liquid lines may be installed level.

H. When brazing, remove or protect components that could be damaged by heat. Braze pipes with a dry nitrogen purge to avoid oxidation.

I. Before installation, clean piping, tubing, and fittings to cleanliness level required by VRF HVAC system manufacturer.

J. Joint Construction:

1. Brazed Joints

a. Ream ends of tubes and remove burrs.
b. Remove scale, slag, dirt, and debris from inside and outside of tube and fittings before assembly.
c. Construct joints in accordance with AWS's "Brazing Handbook," "Pipe and Tube" Chapter.
d. Use Type BAg (cadmium-free silver) alloy for joining copper with bronze.
e. The piping being brazed shall be purged of air to remove the oxygen and filled with one of the following inert gases: oxygen-free nitrogen, helium or argon. The piping system shall be purged with an inert gas for a minimum time corresponding to five volume changes through the piping system prior to brazing. The pre-purge rate shall be at a minimum velocity of 100 feet per minute (0.508 m/s). The inert gas shall be directly connected to the tube system being brazed to prevent the entrainment of ambient air. After the pre-purge, the inert gas supply shall be maintained through the piping during the brazing operation at a minimum pressure of **1.0 psi** (**6.89 kPa**) and a maximum pressure of **3.0 psi** (**20.67 kPa**). The joint shall be brazed with a filler metal conforming to AWS A5.8

2. Mechanically Pressed Joints

a. The installing contractor shall be fully trained and qualified by the manufacturer of the mechanically pressed joints to install the selected piping connections.
b. Mechanical joints shall be installed in accordance with the manufacturer’s

instructions.

3. Flared Joints

   a. Flared fittings shall be installed in accordance with the manufacturer's instructions. The flared fitting shall be used with the tube material specified by the fitting manufacturer. The flared tube end shall be made by a tool designed for that operation.

4. Soldered Joints

   a. Use of soldered joints is prohibited within VRF systems.

3.8 INSTALLATION OF PIPING AND TUBING INSULATION

A. Seal longitudinal seams and end joints with manufacturer's recommended adhesive to eliminate openings in insulation that allow passage of air to surface being insulated. Installation to maintain a continuous vapor barrier.

B. Insulation Installation on Pipe Fittings and Elbows:

   1. Install mitered sections of pipe insulation.
   2. Secure insulation materials and seal seams with manufacturer's recommended adhesive to eliminate openings in insulation that allow passage of air to surface being insulated.

C. Insulation Installation on Valves and Pipe Specialties:

   1. Install preformed valve covers manufactured of same material as pipe insulation when available.
   2. When preformed valve covers are unavailable, install cut sections of pipe and sheet insulation to valve body. Arrange insulation to permit access to packing and to allow valve operation without disturbing insulation.
   3. Secure insulation to valves and specialties and seal seams with manufacturer's recommended adhesive to eliminate openings in insulation that allow passage of air to surface being insulated.

D. Where PVC jackets are indicated, install with **1-inch (25-mm)** overlap at longitudinal seams and end joints, for horizontal applications. Seal with manufacturer's recommended adhesive.

   1. Apply two continuous beads of adhesive to seams and joints, one bead under lap and the finish bead along seam and joint edge.

E. Where metal jackets are indicated, install with **2-inch (50-mm)** overlap at longitudinal seams and end joints. Overlap longitudinal seams arranged to shed water. Seal end joints with weatherproof sealant recommended by insulation manufacturer. Secure jacket with stainless steel bands **12 inches (300 mm)** o.c. and at end joints.

3.9 INSTALLATION OF DUCT, ACCESSORIES, AND AIR OUTLETS

A. Where installing ductwork adjacent to equipment, allow space for service and maintenance.

B. Comply with requirements for metal ducts specified in Section 233113 "Metal Ducts."

C. Comply with requirements for air duct accessories specified in Section 233300 "Air Duct Accessories."

D. Comply with requirements for air diffusers specified in Section 233713 "Air Diffusers, Registers and Grilles."

3.10 IDENTIFICATION

A. Identify system equipment, piping, tubing, and valves. Comply with requirements for identification specified in Section 230553 "Identification for HVAC Piping and Equipment."

3.11 FIELD QUALITY CONTROL

A. Manufacturer's Field Service: Engage VRF HVAC system manufacturer's service representative to advise and assist installers; witness testing; and observe and inspect components, assemblies, and equipment installations, including controls and connections.

1. Field service shall be performed by a manufacturer-trained and authorized service representative of VRF HVAC system manufacturer whose primary job responsibilities are to provide direct technical support of its products.
2. Manufacturer-trained and authorized service representative shall provide on-site visits during construction at installation milestones indicated. System Installer shall coordinate each visit in advance to give manufacturer sufficient notice to plan the visit.

    a. First Visit: Kick-off meeting.
    b. Second Visit: At approximately [**25**] percent completion of system(s).
    c. Third Visit: At approximately [**50**] percent completion of system(s).
    d. Fourth Visit: At approximately [**75**] percent completion of system(s).
    e. Fifth Visit: Final inspection before system startup.

3. Kick-off Meeting:

    a. Meeting shall include system Installer and other related trades with sole purpose of reviewing VRF HVAC system installation requirements and close coordination required to make a successful installation.
    b. Meeting shall be held at Project site and scheduled at a mutually agreed to time that occurs before the start of any part of system installation.

c. Meeting shall cover the following as a minimum requirement:

1) Review of latest issue of Contract Documents, Drawings, and Specifications, relevant to VRF HVAC systems.
2) Manufacturer's installation requirements specific to systems being installed.
3) Review of all relevant VRF HVAC system submittals, including delegated-design submittals.
4) Required field activities related installation of VRF HVAC system.
5) Project team communication protocol, contact information, and exchange of responsibilities for each party involved, including manufacturer, supplier, system Installer, and other related trades.

4. Site Visits: Activities for each site visit shall include the following:

a. Meet with VRF HVAC system Installer to discuss field activities, issues, and suggested methods to result in a successful installation.
b. Offer technical support to Installer and related trades as related to VRF system(s) being installed.
c. Review progress of VRF HVAC system(s) installation for strict compliance with manufacturer's requirements.
d. Advise and if necessary, assist Installer with updating related refrigerant calculations and system documentation.

5. Final Inspection before Startup:

a. Before inspection, Installer to provide written request to manufacturer stating the system is fully installed according to manufacturer's requirements and ready for final inspection.
b. All system equipment and operating components shall be inspected. If components are inaccessible for inspection, they shall be made accessible before the final inspection can be completed.
c. A factory-trained and authorized service representative shall provide a comprehensive inspection of all equipment and each operating component that comprise the complete system(s). Inspection shall follow a detailed checklist specific to each equipment and operating component.
d. Inspection reports for indoor units shall include, but not be limited to, the following:

1) Unit designation on Drawings.
2) Manufacturer model number.
3) Serial number.
4) Network address, if applicable.
5) Each equipment setting.
6) Mounting, supports, and restraints properly installed.
7) Proper service clearance provided.
8) Wiring and power connections correct.
9) Line-voltage reading(s) within acceptable range.
10) Wiring and controls connections correct.

11) Low voltage reading(s) within an acceptable range.
12) Controller type and model controlling unit.
13) Controller location.
14) Temperature settings and readings within an acceptable range.
15) Condensate removal acceptable.
16) Fan settings and readings within an acceptable range.
17) Unit airflow direction within an acceptable range.
18) If applicable, fan external static pressure setting.
19) Filter type and condition acceptable.
20) Noise level within an acceptable range.
21) Refrigerant or hydronic piping properly connected and insulated.
22) Condensate drain piping properly connected and insulated.
23) If applicable, ductwork properly connected.
24) If applicable, external interlocks properly connected.
25) Remarks.

e. Inspection reports for outdoor units shall include, but not be limited to, the following:

1) Unit designation on Drawings.
2) Manufacturer model number.
3) Serial number.
4) Network address, if applicable.
5) Each equipment setting, including compressor speed control.
6) Mounting, supports, and restraints properly installed.
7) Proper service clearance provided.
8) Wiring and power connections correct.
9) Line-voltage reading(s) within acceptable range.
10) Wiring and controls connections correct.
11) Low voltage reading(s) within an acceptable range.
12) Condensate removal acceptable.
13) Noise level within an acceptable range.
14) Refrigerant piping properly connected and insulated.
15) Condensate drain piping properly connected and insulated.
16) For water-source outdoor units, water piping properly connected and insulated.
17) For water-source outdoor units, proof of water flow checked for proper operation.
18) Remarks.

f. Installer shall provide manufacturer with the requested documentation including as-built piping lengths and technical support during inspection.
g. Installer shall correct observed deficiencies found by the inspection.
h. Upon completing the on-site inspection, manufacturer shall provide a written report with complete documentation describing each inspection step, the result, and any corrective action required.
i. If corrective action is required by Installer that cannot be completed during the same visit, provide additional visits, as required, until deficiencies are resolved, and systems are deemed ready for startup.

j. Final report shall indicate the system(s) inspected are installed according to manufacturer's requirements and are ready for startup.

B. Perform the following tests and inspections with the assistance of manufacturer's service representative:

1. Perform each visual and mechanical inspection and electrical test stated in NETA Acceptance Testing Specification. Certify compliance with test parameters.
2. Leak Test: After installation, charge system and test for leaks. Repair leaks and retest until no leaks exist.
3. Operational Test: Not less than 24 hours after electrical circuitry has been energized, start units to confirm proper motor rotation and unit operation.
4. Test and adjust controls and safeties. Replace damaged and malfunctioning controls and equipment.

C. Refrigerant and Hydronic Tubing Positive Pressure Testing:

1. Comply with more stringent of VRF HVAC system manufacturer's requirements and requirements indicated.
2. After completion of tubing installation, pressurize tubing systems to a test pressure:

   a. Refrigerant piping to a test pressure of not less than **600 psig** using dry nitrogen.
   b. Hydronic piping to a test pressure of not less than **43 psig**.

3. Successful testing shall maintain a test pressure for a continuous and uninterrupted period of 24 hours. Allowance for pressure changes attributed to changes in ambient temperature are acceptable.
4. Prepare test report to record the following information for each test:

   a. Name of person starting test, company name, phone number, and e-mail address.
   b. Name of manufacturer's service representative witnessing test, company name, phone number, and e-mail address.
   c. Detailed description of extent of tubing tested.
   d. Date and time at start of test.
   e. Test pressure at start of test.
   f. Outdoor temperature at start of test.
   g. Name of person ending test, company name, phone number, and e-mail address.
   h. Date and time at end of test.
   i. Test pressure at end of test.
   j. Outdoor temperature at end of test.
   k. Remarks:

5. Submit test reports for Project record and to system manufacturer.

D. Refrigerant Tubing Evacuation Testing:

1. Comply with more stringent of VRF HVAC system manufacturer's requirements and requirements indicated.
2. After completion of tubing positive-pressure testing, evacuate tubing systems to a pressure of 500 microns.
3. Successful testing shall maintain a test pressure for a continuous and uninterrupted period of one hour with no change.
4. Prepare test report to record the following information for each test:

    a. Name of person starting test, company name, phone number, and e-mail address.
    b. Name of manufacturer's service representative witnessing test, company name, phone number, and e-mail address.
    c. Detailed description of extent of tubing tested.
    d. Date and time at start of test.
    e. Test pressure at start of test.
    f. Outdoor temperature at start of test.
    g. Name of person ending test, company name, phone number, and e-mail address.
    h. Date and time at end of test.
    i. Test pressure at end of test.
    j. Outdoor temperature at end of test.
    k. Remarks:

5. Submit test reports for Project record and to system manufacturer.
6. Upon successful completion of evacuation testing, system shall be charged with refrigerant.

E. System Refrigerant Charge:

1. System Installer shall consult system manufacturer to determine the correct system refrigerant charge based on as-built piping lengths.
2. Installer shall charge system following VRF HVAC system manufacturer's written instructions.
3. Total refrigerant charge shall be recorded and permanently displayed at the system's outdoor unit.

3.12 STARTUP SERVICE

A. Installer shall engage a factory-trained and authorized service representative of VRF HVAC system manufacturer to perform system(s) startup supervision.

1. Complete startup service of each separate system.
2. Complete system startup service according to manufacturer's written instructions.

B. Startup checks shall include, but not be limited to, the following:

1. Check control communications of equipment and each operating component in system(s).

2. Check each outdoor unit’s power supply is connected 12 to 24 hours before startup of system.
3. Check each indoor unit's response to demand for cooling and heating.
4. Check each indoor unit's response to changes in airflow settings.
5. Check each indoor unit and outdoor unit for proper condensate removal.

C. Installer shall accompany factory-trained and authorized service representative during startup service and provide manufacturer's service representative with requested documentation and technical support during startup service.

1. Installer shall correct deficiencies found during startup service for reverification.

D. System Operation Report:

1. After completion of startup service, manufacturer shall issue a report for each separate system.
2. Report shall include complete documentation describing each startup check, the result, and any corrective action required.
3. Manufacturer shall electronically record not less than one hour of continuous operation of each system and submit with report for historical reference.

a. All available system operating parameters shall be included in the information submitted.

E. Witness:

1. Invite [**Architect**][**Owner**][**and**][**Commissioning Agent**] to witness startup service procedures.
2. Provide written notice not less than [**20**] business days before start of startup service.

3.13 ADJUSTING

A. Adjust equipment and components to function smoothly and lubricate as recommended by manufacturer.

B. Adjust initial temperature set points. Adjust initial airflow settings and discharge airflow patterns.

C. Set field-adjustable switches according to VRF HVAC system manufacturer's written instructions, and as indicated.

3.14 MAINTENANCE SERVICE

A. Initial Maintenance Service: Beginning at Substantial Completion, maintenance service shall include [**12**] months' full maintenance by [**skilled employees of system Installer**][**who are**][**manufacturer's authorized service representative**]. Include

[**four**] service visits for preventive maintenance, repair or replacement of worn or defective components, lubrication, cleaning, and adjusting as required for proper equipment and system operation. Parts and supplies shall be manufacturer's authorized replacement parts and supplies.

3.15 DEMONSTRATION

A. Engage a VRF HVAC system manufacturer's factory-authorized service representative to train Owner's maintenance personnel to adjust, operate, and maintain entire system.

B. Instructor:

1. Instructor shall be factory trained and certified by VRF HVAC system manufacturer with current training on the system(s), equipment, and controls that are installed.

C. Schedule:

1. Schedule training with Owner at least 10 business days before first training session.
2. Training shall occur before Owner occupancy.
3. Training shall be held at mutually agreed date and time during normal business hours.

D. Location: Owner shall provide a suitable on-site location to host classroom training.

E. Training Attendance: For record purposes, document training attendees at the start of each new training session. Record attendee's name, signature, phone number, and e-mail address.

F. Training Format: Individual training modules shall include classroom training followed by hands-on field demonstration and training.

G. Training Materials: Provide training materials in electronic format to each attendee.

1. Offer online instructional videos showing general operation and maintenance that are coordinated with operation and maintenance manuals.

H. Acceptance: Obtain [**Architect**][**Commissioning Agent**][**or**][**Owner**] written acceptance that training is complete, and requirements indicated have been satisfied.

END OF SECTION 238129

SECTION 238237

FINNED TUBE RADIATION

PART 1 GENERAL

1.01 RELATED DOCUMENTS

A. Drawings and general provisions of the Contract, including General and Supplementary Conditions and Division 1 Specification Sections, apply to this Section.

1.02 RELATED WORK SPECIFIED ELSEWHERE

HVAC Piping: Section 232000
Valves: Section 230523

1.03 SUBMITTALS

A. Schedule: Itemize pipe or tube size and material, fin size and material, fin thickness, fin spacing per linear foot, actual finned length of each element, number of rows of element and rating in Btuh per linear foot of finned element (single or double row) and location of installation (room or space number).

B. Product Data: Manufacturer's catalog sheets, brochures, performance charts, specifications and installation instructions for each item specified.

C. Quality Control Submittals:

1. IBR Directory: Submit one current copy.

1.04 QUALITY ASSURANCE

A. Regulatory Requirements: Ratings of radiation shall be IBR approved, and listed in the current IBR Directory.

1.05 PRODUCT DELIVERY

A. Deliver radiation equipment in shipping containers, properly labeled as to type, size and finish.

PART 2 PRODUCTS

2.01 MANUFACTURERS/COMPANIES

Rittling Hydronics
Vulcan Radiator Company "Linovector with Dura-Mount" Catalog 630E-4/82.
Slant/Fin Corporation "Commercial and Designer Series" Publication CP-100.
Trane Air Conditioning "Architectural Radiation" Catalog DS FIN-6/1/79.

Sterling Radiator "Classic" and "Versa-Line" Classic and V2R catalog cuts.

2.02 FINNED TUBE RADIATION

A. Heating Elements:

1. Steel Type: Fabricated from threaded 1-1/4 inch or 2 inch seamless steel tube, or Schedule 40 ASTM black steel pipe, with steel fins securely bonded to same by expansion of the tube or pipe, or equivalent method as approved by the Engineer. Furnish steel tube with a minimum wall thickness of 0.123 inch for 1-1/4 inch tube and 0.135 inch for 2 inch tube. Fins shall be a minimum of 0.024 inch thick, of size and in number per linear foot of element, as indicated.
2. Non-Ferrous Type: Fabricated from 3/4 inch, 1 inch or 1-1/4 inch seamless copper tubing, with aluminum fins securely bonded to the tubing by expansion of the tubing, or equivalent method as approved by the Owner. Rate tubing for 150 psi working pressure. Fins shall be minimum of 0.015 inch thick, of size and in number per linear foot of element as indicated. Provide fins with integral finned collar and a stamped pattern for strength and rigidity. Furnish tube ends suitable for use with solder fittings.

B. Wall Mounting Strips: Channel type, roll form strip fabricated from a minimum of No. 20 USS gage sheet steel, of color and finish to match enclosure. Furnish strip with a continuous channel running the full length of the strip, so as to allow the enclosure panel to rigidly lock into place and the bottom into the enclosure brackets.

C. Enclosure Brackets and Cradles: Fabricate from a minimum of No. 14 USS gage sheet steel die formed, rigidized, with mounting holes for sliding chair and installed on 2'-0" centers. Secure brackets to the top mounting strips. Support heating elements on maximum 4'-0" centers, by means of chair type cradles and provide for adjustment of pitch and alignment of elements. Fabricate cradle from a minimum of No. 16 gage steel, designed to slide free and easily on support arms which shall be attached to the brackets. Rod, scissors type or wire support hangers are not acceptable. When additional piping is to be installed, provide special hangers furnished by the radiator manufacturer or a qualified pipe hanger manufacturer as approved.

D. Dampers: Fabricate from a minimum of No. 20 USS gage sheet steel, properly strengthened and equipped with a hinged arrangement for pivoting and positioning; factory applied black enamel finish. Provide damper linkage consisting of one of the following:

1. Knob operators.
2. Chain - cogwheel device.
3. Threaded screw and trunnion device.
4. Threaded screw and trunnion device with a security type manual operator or an equivalent vandal resistant device.

E. Back Panel: Fabricate from No. 20, 18, 16, or 14 USS gage steel welded to the

mounting strip forming an integral unit extending full or partial height of enclosure or extending to floor.

F. Enclosures, Standard Type:

1. Sloping Top Design: Fabricated from a minimum of No. 16 USS gage sheet steel with an integral pencil-proof top outlet louver, firmly supported at top by a continuous channel type wall mounting strip and at the bottom by enclosure brackets. Provide gusset plates extending from the top and front of the enclosure to the wall, so as to ensure retention of the enclosure shape during shipment and after installation. Offset enclosure at one end, to allow for joining without external joiner strips. Furnish die-formed end panels with rounded edges.
2. Integral Pencil-proof Top Outlet and Bottom Inlet: Same fabrication as a. above.

G. Enclosures, Institutional Type:

1. Sloping Top Design: Fabricated from a minimum of No. 14 USS gage sheet steel with an integral pencil-proof top outlet and pencil-proof bottom inlet louver, firmly supported at top by a continuous channel type wall mounting strip and at the bottom to enclosure brackets with vandal resistant fasteners and pencil-proof inlet grilles. Provide panels, not rigidly restrained at the top, with reinforcing gusset members at each end of panel.
2. At each valve or balancing fitting location, where a 4 foot panel enclosure section cannot be individually removed without disturbing an adjacent enclosure section, provide a full height by 12 inches wide removable access panel secured in place with concealed vandal resistant devices.

H. Enclosures, Security Type-Perforated: Completely enclosed wrap-around design, of 14 or 12 USS gage steel; sloping top with 1/8 inch diameter holes in the inlet and outlet air openings. Secure enclosure to a continuous top and bottom support strip. Fasten enclosure to bottom support strip with vandal resistant sheet metal screw 1'-0" on centers.

I. Enclosure Accessories: Furnish end caps, corner pieces, wall-to-wall trim strips, pilaster covers, column covers, etc., of the same manufacturer.

J. Finish (Enclosures and Accessories): Factory applied prime coat followed by baked enamel on visible surfaces. Color as indicated or as selected by the Architect/Engineer from the manufacturer's standard colors.

2.03 MISCELLANEOUS MATERIALS

A. Calk for Mounting Strip: As recommended by manufacturer, color to match mounting strips.

B. Fasteners:

1. Self-Drilling Anchors (Group III, Type 1): Ramset's RD Series, or Red Head/Phillips Series S-14.

2. Non-Drilling Anchors (Group VIII, Type 1): Ramset's Dynaset DS Series, Hiti's HDI Series, or Red Head/Phillips J Series.
3. Hollow Wall, Hex Head, and Drive Fasteners: Molly Fastener Group, Molly Division Headquarters, 504 Mt. Laurel Ave., Temple, PA 19560.

PART 3 - EXECUTION

3.01 INSTALLATION

A. Install the Work of this Section in accordance with the manufacturer's printed instructions unless shown or specified otherwise.

B. Secure radiation enclosure wall mounting strips and brackets to masonry wall construction with fasteners on maximum 2'-0" centers.

C. Finned Type Radiations (Institutional Type):
1. Install radiation with a 4 inch clearance between finished floor and the bottom of the radiator enclosure, unless otherwise indicated. Make selection resulting in the left and right end panels of each individual wall-to-wall, wall-to-column or column- to-column installation being the same length and the intermediate panels, between the left and right end panels, being the longer panels. Intermediate panels shall be the same length except where access panels are required.
2. Continuously calk, between the mounting strip and the wall surface.

END OF SECTION 238237

SECTION 260100
GENERAL PROVISIONS FOR ELECTRICAL WORK

PART 1 - GENERAL

1.01 SCOPE OF WORK

A. Provide labor, materials, tools, machinery, equipment, and services necessary to complete the Electrical Work under this Contract. All systems and equipment shall be complete in every aspect and all items of material, equipment and labor shall be provided for a fully operational system and ready for use. Coordinate the work with the work of the other trades in order to resolve all conflicts without impeding the job progress.

B. When an item of equipment is indicated on a floor plan and not shown on associated riser diagram or vice-versa, the Contractor shall provide said item and all required conduit and wiring connections for a complete system as part of the Contract.

C. All penetrations made into other trades work (e.g. wires, electrical boxes penetrating ductwork, etc) are to be sealed to air tight/watertight condition. Penetrations through insulated systems, such as refrigerated rooms/equipment, etc, shall be insulated and sealed on both sides of penetration. Sealant on interior side of such insulated spaces/equipment shall be silicone recommended by manufacturer.

1.02 EXAMINATION OF SITE

A. The Contractor shall be held to have examined the site and to have compared it with the Drawings and Specifications, and deemed to have been satisfied as to the conditions existing at the site, as relating to the actual conditions of the site at the time estimating the Work, the storage and handling of materials, and all other matters as may be incidental to the Work under the Contract, before bidding, and no allowance will subsequently be made to the Contractor by reason of any error due to the Contractor's neglect to comply with the requirements of this clause.

1.03 RELATED DOCUMENTS

A. Drawings and General Provisions of the Contract.

B. Division 1 - General and Supplementary Requirements.

1.04 ELECTRICAL EQUIPMENT AND INSTALLATIONS

A. All electrical equipment shall be the latest of the current year in design, material and workmanship, and shall be the type or model called for in these Specifications.

B. If the type or model specified has been superseded by a later type or model, the latest shall be submitted for approval and shall be provided as part of the Contract.

C. Coordinate the installation of HVAC materials and equipment above ceilings with suspension system, light fixtures, and all other installations and accessories.

D. Provide all rigging, disassembly and reassembly of equipment including the furnishing and installation of dunnage and all other required and necessary accessories. Supports for conduit runs/etc. supported by the roof deck shall utilize manufactured supports or pipes that will permit effective roofing. Use of irregular shaped units such as strut channels is not permitted.

E. For purposes of clearness and legibility, electrical Drawings are essentially diagrammatic and size and location of equipment are drawn to scale wherever possible. The Drawings indicate size, connection points and routes of conduit. It is not intended, however, that all offsets, rises and drops are shown. Provide conduit runs as required to fit structure, avoid obstruction, and retain clearances, headroom openings and

passageways. Conduits installed over any means of egress and access passageways must be 7'-6" clear inclusive of insulation.

1. Location of items passing through roofing/ waterproofing membranes shall be in strict accordance with recommendations of the NRCA (National Roof Contractors Association) Manual to allow for proper flashing of items, including, but not limited to, the following:

   a. No penetrations shall be made within 12" of any walls, parapets, roof curbs, expansion joints or any other projections (clear distance between penetration or equipment curb face shall be 12" minimum).

   b. Provide manufactured curb chases where multiple conduits enter at one location.

   c. Conduit/equipment supports that penetrate membranes shall be round or square/rectangular to allow proper flashing. Use of "Kindorf" type supports is not permitted to penetrate membranes.

2. Conduits at equipment must be done in a manner such that access around equipment is not impeded, such as at equipment platforms.

1.05 SUBMITTALS

Provide as outlined in each individual section of these Specifications, including but not limited to:

A. Product Data: Submit manufacturer's product data for equipment including capacity, performance charts, test data, materials, dimensions, weights, and installation instructions.

B. Shop Drawings: Submit manufacture's shop drawings indicating dimensions, weight loading, required clearances, location**,** and method of assembly of components.
Submittals are mandatory as noted in the respective specifications. Schedules, installation instructions, startup manuals, operation and maintenance manuals, and shop drawings are always required to be submitted.

C. Samples

D. Special Warranty

E. Quality Assurance submittals

F. Operation and Maintenance Manuals

G. Test results and certificates

H. Manuals

1.06 COORDINATION DRAWINGS

A. Coordination Drawings: The Electrical Contractor shall cooperate with all Contractors in the development of the coordination drawings. The drawings, indicating ductwork, gas piping, controls, etc. shall be generated by the HVAC/Plumbing contractor, who in turn is to provide them to the Electrical contractor for the inclusion of electrical work in this coordination set. Ensure that access for commissioning and replacement/maintenance of equipment, valves, gauges, dampers, controls, etc. is accounted for in the preparation of the drawings. The specified order in which the trade contractors impose their work on the coordination drawings is not intended to grant priority to any one trade contractor in the allocation of space. At the completion of this phase, hold a coordination meeting to eliminate any interference among the trades that the drawings indicate and to avoid any conflicts in installing the Work.

1.07 WORK IN EXISTING BUILDINGS

A. The Contractor is referred to Specifications related to General Requirements of Work in Existing Structures which shall apply to the Work of this Contract.

B. Refer to General and Supplemental Specifications for removal work.

C. Removals, Replacements, Adjustments

1. The Contractor shall remove, relocate, replace, adjust or adapt, all existing conduit, wiring and other electric equipment or apparatus, as required, to provide a complete installation.

2. The Work shall include, providing all materials, all necessary extensions, connections, cuttings, repairing, adapting and other Work incidental thereto, together with such temporary connections as may be required to maintain service pending the completion of the permanent Work. All Work shall be left in good working order and in a condition equal to the adjacent new or existing Work.

D. Care in Removing Existing Conductors

1. The Contractor shall use due care and diligence in removing existing conductors from existing conduits in order to prevent conductors from breaking and becoming an irretrievable obstruction within the conduits.

E. Cutting and Repairing

1. Whenever the cutting, or drilling, or removal of any part of the structure (ceilings, walls, floors, shelving, bookcases, partitions, etc.), is required in order to remove, relocate, alter or install any article of electrical equipment (including conduits, boxes, fittings, etc.), the Contractor shall perform all cutting, drilling, etc., and remove the section of structure required. After removal and installation of the electric equipment, the Contractor shall repair the section of structure, as directed by the Owner's Representative, with new materials, equal to that of adjacent structure of the same type.

   Note that in general, all holes through existing structures for conduit installation shall be core drilled, unless prior written approval is provided by the Owner.

   Contractor shall use extreme care when core drilling to avoid damaging the existing infrastructure.

2. Whenever holes are cut in fire-rated walls or floor slabs in order to permit the installation of conduit or electrical equipment, these holes shall be repaired with material that will restore the fire rating of the wall or floor slab to its original condition.

3. The Contractor shall paint all repaired areas of the building. The paint shall match the paint of adjacent surface areas, or extend to the nearest architectural break-line, as directed.

4. Wherever any part of the structure is marred or damaged, the Contractor shall repair the damaged or marred areas of the structure.

5. Where a piece of electrical equipment is removed, the Contractor shall finish that part of the surface to match surroundings.

F. Damaged Apparatus: Should any damage, due to the execution of this Contract, occur to the furniture, fixtures, or any equipment or apparatus, such damage shall be properly repaired and/or replaced by the Contractor without charge.

G. Non-Interruption of Services

1. It is imperative that all existing services (electric, light, power, fire alarm, telecommunications, etc.) be kept in operation at all times, unless prior written approval is received from the Owner.

2. Provide fire watch services, as necessary, during disruption of fire alarm system.

1.08 TESTS

A. The Contractor shall demonstrate to the Owner operation of all equipment and systems. All tests shall be completed to the satisfaction of the Owner. Each test shall be performed as indicated in the individual specification section.

1.09 GUARANTEES, WARRANTIES, BONDS, AND MAINTENANCE CONTROL

A. Refer to Specification Section for procedures and submittal requirements for warranties. Refer to individual equipment specifications for warranty requirements.

1. Compile and assemble the warranties specified for Electrical work into a separated set of documents, tabulated and indexed for easy reference.

2. Provide complete warranty information for each item to include product or equipment including duration of warranty or bond; and names, addresses, and telephone numbers and procedures for filing a claim and obtaining warranty services.

3. Warranties for the equipment, workmanship and materials should be provided for the period of one year with the exception of the warranty on the refrigeration compressors. Five (5) years warranty shall be provided for the refrigeration compressors.

4. Manufacturers', in addition to Contractors' warranties, shall be provided for all Electrical equipment and accessories.

5. All warranties are to start from the date of Substantial Completion.

1.10 OPERATIONS, TRAINING, AND MAINTENANCE MANUALS

A. General

1. Refer to Specification section for Systems Operation and Maintenance Manual, for procedures and requirements for preparation and submittal of operation and maintenance manuals for each piece of equipment. Refer to individual equipment specifications for maintenance manual additional requirements. In addition, include the following information:

2. Description of function, normal operating characteristics and limitations, performance curves, engineering data and tests, and complete nomenclature and commercial numbers of all replaceable parts.

3. Manufacturer's printed operating procedures to include start-up, break-in, routine and normal operating instructions; regulation, control, stopping, shut-down, and emergency instructions; and summer and winter operating instructions.

4. Maintenance procedures for routine preventative maintenance and troubleshooting; disassembly, repair, and reassemble; aligning and adjusting instructions.

5. Servicing instructions and lubrication charts and schedules.

B. Bind all the other Sections maintenance manuals in a single final Operating and Maintenance Manual.

C. Refer to Specification Section for Facility Start-Up, Demonstration and Training, for procedures and requirements for training on each piece of equipment. Refer to individual equipment specifications for the additional training requirements.

1.11 CLEANING AND REPAIR

A. On completion of installation, inspect interior and exterior of installed equipment. Remove paint splatters and other spots. Vacuum dirt and debris; do not use compressed air to assist in cleaning. Repair exposed surfaces to match original finish.

B. Contractor shall not leave sharp exposed metal edges (bottom of threaded rods, electrical equipment supports, etc.) that could otherwise present safety hazards to the building's occupants/work staff.

1.12 BMS/DDC COORDINATION

A. Coordinate with General Contractor as to actual scope to be included in the Electrical work and delineation with the HVAC Contractor and associated subcontractor's work associated with HVAC controls and power to equipment as required.

1.13 INSPECTIONS

A. Refer to Section Specification Section for Inspections.

B. The following Special Inspections are required by the 2020 NYS Building Code for the Electrical Trade:

Item	Code Section
Fire-Resistant Penetration and Joints	NYS BC 1705.17

C. The Contractor is responsible for the following inspections and tests to be performed in the presence of the Fire Department.

Item	Code Section
Fire Alarm Test, including Record of Completion	NYS BC 907.7

END OF SECTION

*** * ***

LIST OF SUBMITTALS

SUBMITTAL	**DATE SUBMITTED**	**DATE APPROVED**
Product Data:	_____	_____
Shop Drawings:	_____	_____
Samples:	_____	_____
Special Warranty:	_____	_____
Quality Assurance submittals:	_____	_____
Test results and certificates:	_____	_____
Operation and Maintenance Manuals:	_____	_____

*** * ***

SECTION 260221

MOTORS AND MOTOR CONTROLLERS

PART 1 - GENERAL

1.1 PRODUCTS FURNISHED BUT NOT INSTALLED

A. Deliver the following items to the Electrical Work Contractor for installation and connection to power wiring:

1. Motor controllers including 2 copies of approved wiring diagrams.

1.2 RELATED WORK SPECIFIED ELSEWHERE

A. Wiring for Motors and Motor Controllers: Section 260523.

1.3 REFERENCES

A. NEMA MG-1 - Motors and Generators.

B. NEMA ICS - General Standards for Industrial Control and Systems.

C. UL508 - Electric Industrial Control Equipment.

D. IEEE 519 - Recommended Practices and Requirements for Harmonic Control in Electric Power Systems.

1.4 SUBMITTALS

A. Submittals for this section are subject to the re-evaluation fee identified in Article 4 of the General Conditions.

B. Manufacturer's installation instructions shall be provided along with product data.

C. Submittals shall be provided in the order in which they are specified and tabbed (for combined submittals).

D. Waiver of Submittals: The "Waiver of Certain Submittal Requirements" does not apply to this Section.

E. Submittal Package: Submit the product data, and quality control submittals specified below at the same time as a package.

F. Product Data:

1. Motor Controllers: Catalog sheets, specifications, and installation instructions. Submit product data for motor controllers simultaneously with product data required for motors.

a. Identify each controller for use with corresponding motor.
b. Describe overload devices being supplied with each motor controller (include equipment manufacturer's recommendations).
c. Enumerate and describe all accessories being supplied with each motor controller.

2. All Motors:

a. Catalog sheets, specifications and installation instructions.
b. Data proving that voltage rating of each motor is in accordance with specified NEMA standard motor voltage.
c. Data proving that the service factor and temperature rise for the motor's insulation system conforms to NEMA standards for each motor's specific application.
d. Data proving that the motor efficiency rating conforms to NEMA testing and marking standards MG1-12.54 and 12.55.

3. Additional Data for Motors Controlled by Solid State or Adjustable Speed Motor Controllers:

a. Data proving that the motor has been designed for use with associated controller.
b. Data proving that the motor has been designed for use with DC injection braking.

4. Additional Data for Motors 50 HP and Larger: Certified report of manufacturer's routine tests for each motor (NEMA MG 1-12.54).

G. Quality Control Submittals:

1. Harmonic analysis report.
2. Company Field Advisor Data: Include:

a. Name, business address and telephone number of Company Field Advisor secured for the required services.
b. Certified statement from the Company listing the qualifications of the Company Field Advisor.
c. Services and each product for which authorization is given by the Company listed specifically for this project.

H. Contract Closeout Submittals:

1. System acceptance test report.
2. Certificate: Affidavit, signed by the Company Field Advisor and notarized, certifying that the system meets the contract requirements and is operating properly.
3. Operation and Maintenance Data: Deliver 2 copies, covering the installed products, to the Owner's Representative.

1.5 QUALITY ASSURANCE

A. Equipment Qualifications For Products Other Than Those Specified:

1. At the time of submission provide written notice to the Owner of the intent to propose an "or equal" for products other than those specified. Make the "or equal" submission in a timely manner to allow the Owner sufficient time to review the proposed product, perform inspections and witness test demonstrations.
2. If products other than those specified are proposed for use furnish the name, address, and telephone numbers of at least 5 comparable installations that can prove the proposed products have performed satisfactorily for 3 years. Certify in writing that the Owner's Representative of the 5 comparable installations will allow inspection of their installation by the Owner's Representative and the Company Field Advisor.

a. Make arrangements with the Owner's Representative of 2 installations (selected by the Owner) for inspection of the installations by the Owner's Representative. Also obtain the services of the Company Field Advisor for the proposed products to be present. Notify the Owner a minimum of 3 weeks prior to the availability of the installations for the inspection, and provide at least one alternative date for each inspection.
b. Only references from the actual Owner's Representative (Security Supervisor, Maintenance Supervisor, etc.) will be accepted. References from dealers, system installers or others, who are not the actual Owner's Representative of the proposed products, are not acceptable.

1) Verify the accuracy of all references submitted prior to submission and certify in writing that the accuracy of the information has been confirmed.

3. The product manufacturer shall have test facilities available that can demonstrate that the proposed products meet the contract requirements.

a. Make arrangements with the test facility for the Owner's Representative to witness test demonstrations. Also obtain the services of the Company Field Advisor for the proposed product to be present at the test facility. Notify the Owner a minimum of 3 weeks prior to the availability of the test facility, and provide at least one alternative date for the testing.

4. Provide written certification from the manufacturer that the proposed products are compatible for use with all other equipment proposed for use for this system and meet all contract requirements.

B. Harmonic Analysis:

1. The adjustable speed motor controller manufacturer shall perform a harmonic current magnitude and voltage distortion analysis and provide certified calculations specific to this installation, showing that the total harmonic distortion caused by the adjustable speed motor controller will be below the specified level. The analysis shall be accordance with IEEE 519.
2. The results shall be based on a computer aided/modeled circuit simulation of the actual system, based upon the materials and equipment proposed to be furnished and installed.
3. The results shall be based on a computer aided/model circuit from the controller to the distribution transformer supplying the controller, based upon the materials and equipment proposed to be furnished and installed, and associated portions of the existing electrical system.

a. Basic parameters relative to the existing system are specified herein. Additional information deemed necessary by the controller manufacturer to provide a certified harmonic analysis report shall be obtained by a field investigation of the existing system, at no additional cost to the State.

C. Company Field Advisor: Secure the services of a Company Field Advisor from the Company providing the solid state controllers and the adjustable speed controllers for a minimum of 8 working hours for the following:

1. Render advice regarding installation, programming, final adjustment, and testing.
2. Witness final system test and then certify with an affidavit that the motor controllers are installed in accordance with the contract documents and are operating properly.
3. Train facility personnel on the operation and maintenance of the motor controllers (minimum of two 1 hour sessions).
4. Explain available service programs to facility supervisory personnel for their consideration.

D. Service Availability: A fully equipped service organization shall be available to service the completed Work.

PART 2 - PRODUCTS

2.1 MOTORS

A. Classification:

1. Classification According to Application: Comply with NEMA standards for general-purpose alternating-current squirrel-cage induction motors, except:

a. Furnish NEMA definite-purpose or special-purpose motors when required to suit the application.
b. Furnish NEMA type other than squirrel-cage construction when required to suit the application.

2. Classification According to Environmental Protection and Methods of Cooling: Comply with NEMA requirements for a dripproof machine unless otherwise specified or indicated on the drawings, or required to suit the application.

B. Efficiency: Motors shall be stamped with a NEMA nominal efficiency rating in accordance with NEMA testing and marking standards MG1-12.54 and 12.55.

1. Nominal full-load three phase motor efficiency:

OPEN MOTORS			
RPM	**1200**	**1800**	**3600**
HP			
1.0	80.0	82.5	
1.5	84.0	84.0	82.5
2.0	86.5	84.0	84.0
3.0	86.5	86.5	84.0
5.0	88.5	87.5	85.5
7.5	89.5	88.5	87.5
10	90.2	89.5	88.5
15	91.0	90.2	89.5
20	90.2	91.0	90.2
25	91.7	92.4	91.0
30	92.4	93.0	92.4
40	93.0	93.0	92.4
50	92.4	94.1	92.4
60	93.0	93.6	93.0
75	93.6	94.1	93.6
100	93.6	94.1	93.6
125	94.1	94.1	93.6
150	94.5	94.5	94.5
200	94.5	95.0	95.4

CLOSED MOTORS			
RPM	**1200**	**1800**	**3600**
HP			
1.0	81.5	84.0	
1.5	85.5	85.0	84.0
2.0	86.5	84.0	85.5
3.0	88.5	88.5	86.5
5.0	88.5	88.5	87.5
7.5	89.5	91.0	88.5
10	89.5	91.0	89.5
15	90.2	91.0	89.5
20	91.0	91.7	90.2
25	91.7	92.4	90.2
30	92.4	93.6	91.0
40	93.0	93.0	91.0
50	93.6	93.6	92.4
60	93.6	94.1	94.1
75	94.1	94.5	94.1
100	94.1	95.0	94.1
125	94.1	95.0	94.1
150	95.0	95.0	94.1

CLOSED MOTORS			
RPM	**1200**	**1800**	**3600**
HP			
200	95.0	95.8	95.01

2. Furnish motors having an efficiency higher than that indicated above where specified to comply with utility company energy efficiency rebate program requirements.

C. Motor (Nameplate) Voltage:

1. Nominal 120/240 V, Single Phase, 3W, Premises Wiring System:

a. Motors Less Than 1/2 hp: NEMA standard motor voltage 115 V, single phase, 60 Hz.
b. Motors 1/2 hp and Larger: NEMA standard motor voltage 230 V, single phase, 60 Hz.

2. 120/208 V, Three Phase, 4W, Premises Wiring Systems:

a. Motors Less Than 1 hp: NEMA standard motor voltage 115 V, single phase, 60 Hz.
b. Motors 1 hp and Larger: NEMA standard motor voltage 200 V, three phase, 60 Hz. 208 V, 208-230 V, 220 V, or 230 V motors are not acceptable.

D. Horsepower Capacity:

1. Each motor shall not be overloaded by the apparatus it operates under every condition of operation.
2. The horsepower capacity shall be the continuous rating based on the nameplate horsepower rating. (The motor may not be overloaded up to the horsepower obtained by multiplying the rated horsepower by the service factor shown on the nameplate).
3. Where a minimum horsepower capacity is listed, furnish a motor larger than the minimum, if required in a particular case.
4. Pay additional cost due to necessary increase in feeder sizes, circuit breaker sizes, etc., provided under the Electric Contract.

E. Bearings: Equip motors 1/2 hp and larger with ball bearings unless otherwise specified or indicated on the drawings.

F. Speed: As required and approved to meet the requirements of the service for which motors are intended.

G. Space Heaters: Where indicated, equip motors with space heaters and accessories to prevent condensation in the motor windings when motor is not operating.

H. Motor Winding Protection: Where indicated, equip motors with imbedded temperature measuring detectors in the windings (thermocouples or resistance thermometers) with control unit and accessories for direct reading of stator temperatures. Alarm shall sound and motor controller trip at temperature recommended by motor manufacturer.

I. Additional Requirements For Motors Used With Solid State and Adjustable Speed Motor Controllers:

1. Designed specifically for use with type of controller required.
2. Designed for DC injection braking.

J. Brake: Where indicated, equip motors with electro/mechanical brake system.

2.2 MANUAL AND MAGNETIC MOTOR CONTROLLERS

A. Minimum Size: The minimum allowable size of single or three phase magnetic motor controller is NEMA size 0.

B. Voltage Rating: To suit system voltage.

1. For single phase motor controllers which are not produced to suit the system voltage and phases, furnish properly rated 3 phase motor controllers and utilize required number of poles for the single phase circuit.

C. Enclosures:

1. NEMA Type: Unless otherwise indicated, furnish NEMA 1 enclosures.
2. Material: Steel construction unless otherwise indicated.
3. Type A, A1 and A2 Controllers Indicated To Be Flush Mounted: Furnish stainless steel face plates and galvanized steel recessed mounting boxes.

D. Control Power: Furnish fused secondary control power transformer (maximum control voltage 120 volts) mounted within each magnetic motor controller enclosure.

E. Local Control Devices:

1. Manual Motor Controllers:

a. Type A1 Controller: In addition to the on/off switch function, furnish where indicated, a hand/auto switch or 3 position hand-off-auto switch mounted in the enclosure cover.

2. Magnetic Motor Controllers: Equip controllers with push buttons, or 3 position hand-off-auto selector switch, (to suit operation) mounted in the enclosure cover.

a. For NEMA 1 enclosures furnish standard duty devices.
b. For other NEMA enclosures furnish heavy duty devices to suit the requirements of the NEMA enclosure.

F. Pilot Lights:

1. Manual Motor Controllers: Equip controllers with pilot lights (neon) mounted in the enclosure cover.
2. Magnetic Motor Controllers: Equip controllers with pilot lights of the neon lamp type or transformer type, mounted in the enclosure cover.

G. Time Delay Undervoltage Relays:

H. Sequenced Time Delay Relays:

I. Space Heaters: Equip magnetic motor controllers which are installed outdoors, and indoors in unheated locations, with space heaters and humidistat to prevent condensation within the housing.

J. Overload Devices: Equip motor controllers with manual reset melting type (eutectic), or manual reset bi-metallic type standard trip overload devices (NEMA Class 20, trips in 20 seconds or less when carrying a current equal to 600 percent of its current rating). Exceptions:

1. Equip motor controllers with automatic reset overload devices only where indicated.
2. Equip motor controllers with fast trip overload devices when recommended by equipment manufacturer (NEMA Class 10, trips in 10 seconds or less when carrying a current equal to 600 percent of its current rating).
3. Equip motor controllers with slow trip overload devices when recommended by equipment manufacturer (NEMA Class 30, trips in 30 seconds or less when carrying a current equal to 600 percent of its current rating).
4. Equip motor controllers with ambient compensated overload protection where motor and relay are not in the same ambient.
5. Equip motor controllers with solid state overload relays where indicated.

K. Manual Motor Controller Types:

1. Type A (Full Voltage, Non-Magnetic): Allen-Bradley Co.'s Bulletin 609, Cutler-Hammer Products' File A/B300-9115, Furnas Electric Co.'s Class 11, General Electric Co.'s CR-1062, Square D Co.'s Class 2510, Type M, or Westinghouse Electric Corp.'s Type B100.

2. Type A1 (Full Voltage, Non-Magnetic Single Phase): Allen-Bradley Co.'s Bulletin 600, Cutler-Hammer Products' File B200-9101, Furnas Electric Co.'s class 10, General Electric Co.'s CR-101, Square D Co.'s Class 2510, Type F, or Westinghouse Electric Corp.'s Type MS.
3. Type A2 (2 Speed, 2 Winding, Full Voltage, Non-Magnetic): Allen-Bradley Co.'s Bulletin 609TS, Cutler-Hammer Products' File A700, General Electric Co.'s CR-1062, or Square D Co.'s Class 2512, Type M.
4. Type A3 (2 Speed, 2 Winding, Full Voltage, Non-Magnetic, Single Phase): Allen-Bradley Co.'s Bulletin 600, Cutler-Hammer Products' File B200-9106, General Electric Co.'s CR-101, or Square D Co.'s Class 2512, Type F.

L. Magnetic Motor Controller Types:

1. Type B (Full Voltage Magnetic): Allen-Bradley Co.'s Bulletin 509, Cutler-Hammer Products' File A10-9586, Furnas Electric Co.'s Class 14, General Electric Co.'s CR-306, Square D Co.'s Class 8536, or Westinghouse Electric Corp.'s Class A200.
2. Type B-COM (Combination Full Voltage, Magnetic/Safety Switch): Allen-Bradley Co.'s Bulletin 512, Cutler-Hammer Products' File A30-9589, Furnas Electric Co.'s Class 17, General Electric Co.'s, CR-308, Square D Co.'s Class 8538, or Westinghouse Electric Corp.'s Class A203.
3. Type B2 (2 Speed, 2 Winding, Full Voltage, Magnetic): Allen-Bradley Co.'s Bulletin 530, Cutler-Hammer Products' File A700, Furnas Electric Co.'s Class 30, General Electric Co.'s CR-309, Square D Co.'s Class 8810, or Westinghouse Electric Corp.'s Class A900.
4. Type C (Automatic, Reduced Voltage Autotransformer, Magnetic): Allen-Bradley Co.'s Bulletin 570, Cutler-Hammer Products' File A400-9621, Furnas Electric Co.'s Class 36, General Electric Co.'s CR-331, Square D Co.'s, Class 8606, or Westinghouse Electric Corp.'s Class A600.
5. Type C-Com (Combination Automatic, Reduced Voltage Autotransformer, Magnetic/Safety Switch): Allen-Bradley Co.'s Bulletin 572, Cutler-Hammer Products' File A400-9621, Furnas Electric Co.'s Class 37, Square D Co.'s Class 8606, or Westinghouse Electric Corp.'s Class A603.
6. Type D (Part Winding, Magnetic): Allen-Bradley Co.'s Bulletin 530, Cutler-Hammer Products' File A460-9612, Furnas Electric Co.'s Class 36, General Electric Co.'s CR-330, Square D Co.'s Class 8640, or Westinghouse Electric Corp's Class A700.

M. Remote Control Stations:

1. Normal Duty: Start-Stop with pilot light unless otherwise indicated, in NEMA 1 enclosure; Allen-Bradley Co.'s Bulletin 800S, Cutler-Hammer Products' Bulletin 10250, Furnas Electric Co.'s Class 50, General Electric Co.'s CR-2943, Square D Co.'s Class 9001, or Westinghouse Electric Corp.'s Type PB1/PB2.
2. Heavy Duty: Start-Stop with pilot light unless otherwise indicated, in NEMA enclosure to suit conditions; Allen-Bradley Co.'s Bulletin 800T, Cutler-Hammer Products' 10250T, Furnas Electric Co.'s Class 52, General Electric Co.'s CR104P, Square D Co.'s Class 9001, or Westinghouse Electric Corp.'s Type PB1/PB2.

2.3 SOLID STATE MOTOR CONTROLLERS

A. Type SS for Motor _____: Microprocessor controlled, solid state, stepless, reduced voltage motor controller:

1. Companies and Models: Furnish the Company's model which meets the requirements of the motor and driven equipment combination, suits the electrical system parameters, and accommodates the operating features and accessories:

   a. Allen-Bradley Co. Inc.'s Bulletin 2050 (30-120 hp, 208-575 V).
   b. Furnas Electric Co.'s Class 93 (25-350 hp, 200-575 V).
   c. General Electric Co.'s CR270 (20-1000 hp, 480 V).
   d. Square D Co.'s Class 8660 (3-600 hp, 200-575 V).
   e. Westinghouse Electric Corp.'s ES (5-1000 hp, 208-575 V).

2. Operating Features And Accessories:
3. Single speed.

a. Current ramp starting mode: Low initial current (starting at zero) gradually increasing to a maximum starting current value utilizing adjustable acceleration ramp time (rate of current increase). Once up to speed the current falls back to the motors running current.
b. Constant current starting mode: Motor receivers constant current within the current level limit adjustments. Once up to speed the current falls back to the motors running current.
c. Linear timed starting mode: Variable voltage and current controlled acceleration time/linear rate of speed increase, to operate in conjunction with the motor tachometer. Starting current does not exceed the motors running current.
d. Energy saver feature which automatically reduces voltage to lightly loaded motor.
e. Voltage limiter set to not exceed voltage rating of motor.
f. Heavy duty dynamic braking which directs the regenerative energy from the motor into a resistor.
g. Provision to energize electro/mechanical brake to hold the driven equipment stopped, after the motor has stopped.
h. Ambient operating temperature range 0 to 40 degrees C. Maximum humidity 95 percent.
i. Digital display, or meters with switches, showing operational functions:

1) Voltage.
2) Current.
3) Elapsed time.

j. Digital display, or LED's showing diagnostic functions, including:

1) Phase loss.
2) Phase reversal.
3) Undervoltage.
4) Overtemperature.
5) Ground fault.

k. Trouble alarm contact for remote alarm to _____.
l. Suitable for use on circuit capable of delivering _____ amps RMS short circuit fault current.
m. Input voltage: Suitable for use on 208 V ac 3 phase circuit.
n. 100 percent continuous current rating, 300 percent for 30 seconds.
o. Local control panel for manual operation:

1) Start-stop pushbuttons.
2) Hand-Off-Automatic selector switch.
3) Hand-Automatic selector switch, and start-stop pushbuttons.
4) Forward-Reverse selector switch.
5) Fast-Slow (for 2 speed motor).
6) Run light.

p. Local programming panel or other control method for:

1) Acceleration rate.
2) Deceleration rate.

q. Fused secondary control power transformer.
r. Start/stop control voltage maximum 120 V, _____ wire.
s. Auxiliary output contacts, 120 V ac, 1 amp:

1) Fault: 1 N.O., 1 N.O.

t. Overload Devices: Equip motor controller with manual reset solid state, manual reset melting type (eutectic), or manual reset bi-metallic type standard trip overload devices (NEMA Class 20, trips in 20 seconds or less when carrying a current equal to 600 percent of its current rating). Exceptions:

1) Equip motor controllers with fast trip overload devices when recommended by equipment manufacturer (NEMA Class 10, trips in 10 seconds or less when carrying a current equal to 600 percent of its current rating).
2) Equip motor controllers with slow trip overload devices when recommended by equipment manufacturer (NEMA Class 30, trips in 30 seconds or less when carrying a current equal to 600 percent of its current rating).
3) Equip motor controllers with ambient compensated overload protection where motor and relay are not in the same ambient.

u. NEMA 1 enclosure interior space.
v. NEMA 3R enclosure exterior space.
w. Input circuit breaker/disconnect switch with external operator.
x. Input fusible disconnect switch with external operator.
y. Transient protective devices on input terminals; Innovative Technology Inc.'s P-Plus Protector.
z. Manual bypass switch to allow the motor to be operated either from the solid state motor controller or across the line.
aa. Automatic bypass switch to automatically switch to across the line operation upon solid state motor controller failure.
bb. Output isolation contactor to open circuit to motor whenever controller is in stop mode.
cc. Remote control station, NEMA 1 enclosure, start-stop with pilot light; Allen-Bradley Co.'s Bulletin 800T, Cutler-Hammer Products' 10250T, Furnas Electric Co.'s Class 52, General Electric Co.'s CR104P, Square D Co.'s Class 9001, or Westinghouse Electric Corp.'s Type PB1/PB2.
dd. Provide additional operating features and accessories as required by the manufacturer of the equipment which the motor controller is driving.

2.4 ADJUSTABLE SPEED MOTOR CONTROLLERS

A. Type AS-PWM for Motor: Microprocessor based, sine-coded pulse-width-modulation design variable frequency/variable voltage adjustable speed motor controller:

1. Companies and Models: Furnish the Company's model which meets the requirements of the motor and driven equipment combination, suits the electrical system parameters, and accommodates the operating features and accessories:

a. Allen-Bradley Co. Inc.'s 1333 (3/4-50 hp/230 V, 1-5 hp/460 V), 1336 (1-100 hp/230 V, 1-500 hp/460 V), 1352 (25-1400 hp/460 V).
b. Asea Brown Boveri's ACH500 (2-25 hp/230 V, 3-400 hp/460 V), ACS 200 (2-3 hp/230 V, 1-5 hp/460 V), SAMI STAR 30-1300 hp/460 V).
c. Eaton Corp.'s AF-1500 (1-20 hp/230 V, 1-30 hp/460 V, IS5000+ (5-600 hp/460 V).
d. Furnas Electric Co.'s Micro 7000 (2-25 hp/230 V, 2-60 hp/460 V), Super 7000+ (75-200 hp/460 V).
e. General Electric Co.'s AF-300B (3/4-30 hp/230 V, 1/4-300 hp/460 V).
f. Reliance Electric Co.'s GP2000 (1/4-50 hp/230 V, 1/4-100 hp/460 V).
g. Southcon Industrial Controls Inc.'s Magnum PWM (1/4-200 hp/230 V, 1/4 to 400 hp/460 V).
h. Square D Co.'s Class 8804 Omegapak (1-150 hp/230 V, 1-300 hp/460 V).
i. Westinghouse Electric Corp.'s Accutrol 110 (1-75 hp/230 V, 2-20 hp/460 V).

2. Operating Features And Accessories:

a. Suitable for variable torque load.
b. Suitable for constant torque load.
c. Soft start: Adjustable time range of 2 to 600 seconds.
d. Cushioned start: Timed acceleration/deceleration linearly in steps up to the preset speed.
e. Reversing.

1) Regenerative braking which directs the regenerative energy from the motor back into the ac line.

2) Heavy duty dynamic braking which directs the regenerative energy from the motor into a resistor.

f. DC injection braking to bring motor to stop.
g. Provision to energize electro/Mechanical brake to hold the driven equipment stopped, after the motor has stopped.
h. Ground fault protection.
i. Ambient operating temperature range 0 to 40 degrees C. Maximum humidity 95 percent.
j. Digital display showing operational functions:

1) Speed.
2) Output voltage.
3) Output current.
4) Elapsed time.

k. Digital display, or LED's showing diagnostic functions, including:

1) Overcurrent.
2) Overvoltage.
3) Undervoltage.
4) Overtemperature.
5) Ground fault.
6) Overload.

l. Fault alarm contact for remote alarm to _____.
m. Suitable for use on circuit capable of delivering _____ amps RMS short circuit fault current.
n. Input voltage: Suitable for use on 208 V ac 3 phase circuit.
o. Output voltage 0 to 208 V ac, 3 phase.
p. Frequency:

1) Input: 60 Hz.
2) Selectable Output: 3 to 60 Hz, with separately adjustable min/max frequency limits and capability to lock these limits so that they cannot be exceeded.
3) Frequency Reject: Programmable (both the width and the midpoint of up to 3 bands, or end points) to reject operation within the selected bands.
4) Output regulation: + .06 percent.

q. 100 percent continuous current rating, 150 percent for one minute every 10 minutes.
r. Local control panel for manual operation:

1) Start-stop pushbuttons.
2) Hand-Off-Automatic selector switch.
3) Hand-Automatic selector switch, and start-stop pushbuttons.
4) Forward-Reverse selector switch, with timer, for maximum operation of 20 minutes when in service.
5) Manual speed potentiometer.
6) Power on light.
7) Run light.

s. Local programming panel for:

1) Acceleration rate.
2) Deceleration rate.
3) Start torque (boost).
4) Maximum frequency.
5) Volts/Hz pattern.
6) Restart Mode: Automatic restart upon return of input power, manual reset/restart on overload.
7) Restart Mode: Manual reset/restart upon return of input power or overload.
8) Start and direction, local or remote.

9) Stop mode, ramp or coast.

t. Interface Input For Automatic Speed Control: Isolated, direct proportional automatic speed follower which responds to an externally supplied signal from the speed reference signal source for automatic motor speed control when the controller is in the automatic mode of operation.

1) 0-10 V dc.
2) 4-20mA dc.
3) Variable resistance.
4) 3 to 15 psi pneumatic/electric transducer.

u. Interface Input For Automatic Speed Control: Interface which accepts signals from programmable logic control, or computer, for automatic speed and direction control when the controller is in the automatic mode of operation.

v. Interface Input For Emergency Stop: Isolated input to receive signal from the fire alarm system, to stop motor upon alarm condition.

w. Interface Output To Indicate Speed: Interface which follows motor speed, enabling the motor speed to be displayed at the Direct Digital Building Control System primary operator station.

x. Start/stop control voltage maximum 120 V, wire.

y. Auxiliary output contacts, 120 V ac, 1 amp:

1) Spares, for future use: 1 N.O., 1 N.C.
2) For Remote Indication at the Direct Digital Building Control System Primary Operation Station:

a) Run: 1 N.O.
b) Fault: 1 N.O., 1 N.C.
c) At Speed: 1 N.O.

z. Electronic overload device that monitors the motor function to provide motor overload protection at all speeds. Manual or automatic reset as specified under local programming panel.

aa. Motor winding protection, responsive to the motors' imbedded temperature measuring detectors.

1) NEMA 1 enclosure.
2) NEMA 1 enclosure with fans and filter.
3) NEMA 3 enclosure.
4) NEMA 3R enclosure.
5) NEMA 4 stainless steel enclosure.
6) NEMA 12 enclosure.
7) NEMA 12 enclosure with closed loop air conditioner.

bb. Input circuit breaker/disconnect switch with external operator.

cc. Input fusible disconnect switch with external operator.

dd. Controllers designed, equipped, and installed such that the controllers reflect 5 percent or less total harmonic distortion at the source specified under System Acceptance Test. Equip controller with:

1) Input isolation/voltage matching transformer, or 3 percent input line reactor if voltage matching is not required.
2) Transient protective devices on input terminals; Innovative Technology Inc.'s P-Plus Protector.
3) Additional equipment (line filters, etc.) as recommended by the adjustable speed motor controller manufacturer to maintain total harmonic distortion below specified level.
4) Basic Parameters Relative to the Existing System:

a) Distribution Transformer Size: _____ KVA.
b) Distribution Transformer Impedance: _____ percent.
c) Conductors:

(1) Feeder No. Size Distance

d) Short circuit current available at distribution transformer: _____ amperes.
e) Choose one of next 2 subparagraphs.

ee. Manual bypass switch to allow the motor to be operated either from the drive or full speed across the line.

1) Solid state, soft start, or reduced voltage magnetic motor controller arranged and wired to operate motor when switch is in bypass mode. Across-the-line magnetic motor controller may be used for motors less than 7-1/2 hp (208 V), 15 hp (480 V).

ff. Automatic bypass switch to automatically switch to full speed across the line operation upon drive fault (except short circuit, ground fault, or motor thermal overload).

1) Solid state, soft start, or reduced voltage magnetic motor controller arranged and wired to operate motor when switch is in bypass mode. Across-the-line magnetic motor controller may be used for motors less than 7-1/2 hp (208 V), 15 hp (480 V).

gg. Output isolation contactor to open circuit to motor whenever controller is in stop mode.
hh. Interlock system to prevent the load side disconnect switch (at the motor) from being opened while the adjustable speed motor controller is energized. Motor controller input disconnect must be opened before load side disconnect switch can be opened. Coordinate interlock system with Electrical Work Contractor.
ii. Remote operator station, NEMA 1 enclosure:

1) Start.
2) Stop.
3) Frequency (Speed).
4) Forward/Reverse.

jj. Provide additional operating features and accessories as required by the manufacturer of the equipment which the adjustable speed motor controller is driving.

2.5 HARMONICS METER

A. Dranetz-BMI's 155 Harmonics Meter with capability for measuring amperage harmonics, 1000 New Durham Road, Edison, NJ 08818-4019, (800) 372-6832, or (732) 287-3680; Fax: (732) 248-1834.

2.6 NAMEPLATES

A. General: Precision engrave letters and numbers with uniform margins, character size minimum 3/16 inch high.

1. Phenolic: Two color laminated engraver's stock, 1/16 inch minimum thickness, machine engraved to expose inner core color (white).
2. Aluminum: Standard aluminum alloy plate stock, minimum .032 inches thick, engraved areas enamel filled or background enameled with natural aluminum engraved characters.
3. Materials for Outdoor Applications: As recommended by nameplate manufacturer to suit environmental conditions.

PART 3 - EXECUTION

3.1 INSTALLATION

A. Install the Work of this Section in accordance with the manufacturer's printed instructions.

B. Nameplates: Identify each remote control station, indicating motor controlled. Identify each interlock switch, indicating purpose of switch:

1. NEMA 1 Enclosures: Rivet or bolt nameplate to the cover.
2. NEMA 3R, 4, 4X, 7, or 9 Enclosures: Attach nameplates to the cover using adhesive specifically designed for the purpose, or mount nameplate on wall or other conspicuous location adjacent to switch. Do not penetrate enclosure with fasteners.

PART 4 - REMOTE CONTROL STATION SCHEDULE

A. Use normal duty remote control stations in dry non-hazardous locations. Use heavy duty remote control stations in all other locations.

4.2 FIELD QUALITY CONTROL

A. Preliminary System Test:

1. Preparation: Have the Company Field Advisor program and adjust the completed solid state and adjustable speed motor controllers and then operate them long enough to assure that they are performing properly.
2. Run a preliminary test for the purpose of:

a. Determining whether motor controllers are in a suitable condition to conduct an acceptance test.
b. Checking instruments and equipment.
c. Training facility personnel.

B. System Acceptance Test:

1. Preparation: Notify the Owner's Representative at least 3 working days prior to the test so arrangements can be made prior to the test to have a Facility Representative witness the test.
2. Make the following tests:

a. Demonstrate that each solid state and adjustable speed motor controller performs its intended function.
b. Use the harmonics meter to determine the total harmonic distortion caused by the adjustable speed motor controllers.

1) While the motors are running, measure the total harmonic distortion at the transformer serving the building.
2) While the motors are running, measure the total harmonic distortion at the distribution transformer supplying the controllers.
3) If total harmonic distortion caused by the adjustable speed motor controllers exceeds specified limit, install additional equipment as necessary to keep the total harmonic distortion caused by the adjustable speed motor controllers under the specified limit.

3. Supply all equipment necessary for system adjustment and testing.

a. The harmonics meter shall remain the property of the State.
b. The harmonics meter shall remain the property of the Contractor.

1) Submit written report of test results signed by the Company Field Advisor and the Owner's Representative. Mount a copy of the final report in a plexiglass enclosed frame assembly in a conspicuous location on or adjacent to each motor controller.

4.3 MOTOR CONTROLLER SCHEDULE

A. Types of Motor Controllers Required For Single Speed Motors, Unless Indicated Otherwise On Drawings:

1. Nominal 120/240 V, Single Phase, 3W, Premises Wiring System:

a. Single Phase Motors 5 hp or Less - Manually Operated: Type A. Exception: Type A1 may be used for motors 1 hp or less.
b. Single Phase Motors 5 hp or Less - Automatically Operated: Type B. Exception: Type A or Type A1 may be used for motors less than 1/2 hp when the automatic auxiliary controlling device (thermostat, pressure switch, etc.) is rated for the voltage and current requirements of the motor.

1) 120/208 V, Three Phase, 4W, Premises Wiring System:

c. Single Phase Motor Less Than 1 hp - Manually Operated: Type A or Type A1.
d. Single Phase Motors Less Than 1 hp - Automatically Operated: Type B. Exception: Type A or Type A1 may be used for motors less than 1/2 hp when the automatic auxiliary controlling device (thermostat, pressure switch, etc.) is rated for the voltage and current requirements of the motor.
e. Three Phase Squirrel Cage Motors Less Than 7-1/2 hp - Manually or Automatically Operated: Type B-COM (B when indicated on drawing) or Type SS.
f. Three Phase Squirrel Cage Motors 7-1/2 hp and Larger - Manually or Automatically Operated: Type C-COM (C when indicated on drawings) or Type SS.
g. Three Phase Hermetically Sealed Compressor Motors Less Than 7-1/2 hp - Automatically Operated: Type B or Type SS.
h. Three Phase Hermetically Sealed Compressor Motors 7-1/2 hp and Larger - Automatically Operated: Type D or Type SS.

B. Types of Motor Controllers Required For 2 Speed Motors, Unless Indicated Otherwise on Drawings:

1. Nominal 120/240 V, Single Phase, 3W, Premises Wiring System:

a. Single Phase Motors 5 hp or Less - Manually Operated: Type A2. Exception: Type A3 may be used for motors 1 hp or less.
b. Single Phase Motors 5 hp or Less - Automatically Operated: Type B2.

2. 120/208 V, Three Phase, 4W, Premises Wiring System:

a. Single Phase Motors Less Than 1 hp - Manually Operated: Type A2. Exception: Type A3 may be used for motors 1/2 hp or less.
b. Single Phase Motors Less Than 1 hp - Automatically Operated: Type B2.
c. Three Phase Squirrel Cage Motors Less Than 7-1/2 hp - Manually or Automatically Operated: Type B2 or Type SS.
d. Three Phase Squirrel Cage Motors 7-1/2 hp and Larger: Type SS.

C. Types of Motor Controllers Required For Variable Speed Applications:

1. Three Phase Premises Wiring System:

a. Three Phase Motors 1 to 800 hp: Type AS-PMW.

END OF SECTION 260221

SECTION 260519

LOW-VOLTAGE ELECTRICAL POWER CONDUCTORS AND CABLES

PART 1 - GENERAL

1.1 RELATED DOCUMENTS

A. Drawings and general provisions of the Contract, including General and Supplementary Conditions and Division 01 Specification Sections, apply to this Section.

1.2 SUMMARY

A. Section Includes:

1. Copper building wire.
2. Metal-clad cable, Type MC.
3. Armored cable, Type AC.
4. Photovoltaic cable, Type PV.
5. Mineral-insulated cable, Type MI.
6. Tray cable, Type TC.
7. Fire-alarm wire and cable.
8. Connectors and splices.

1.3 DEFINITIONS

A. PV: Photovoltaic.

B. RoHS: Restriction of Hazardous Substances.

C. VFC: Variable-frequency controller.

1.4 SUBMITTALS

A. Submittals for this section are subject to the re-evaluation fee identified in Article 4 of the General Conditions.

B. Manufacturer’s installation instructions shall be provided along with product data.

C. Submittals shall be provided in the order in which they are specified and tabbed (for combined submittals).

D. Product Data: For each type of product.

E. Product Schedule: Indicate type, use, location, and termination locations.

F. Submittals for this section are subject to the re-evaluation fee identified in Article 4 of the General Conditions.

G. Qualification Data: For [**testing agency**] [**manufacturer's authorized service representative**].

H. Field quality-control reports.

1.5 QUALITY ASSURANCE

A. Testing Agency Qualifications: Member company of NETA.

1. Testing Agency's Field Supervisor: Certified by NETA to supervise on-site testing.

B. Qualifications: The persons performing the Work of this Section and their supervisor shall be personally experienced in electrical work and shall have been regularly performing such work for a minimum of 3 years.

C. UL Listing: Equipment and materials for which Underwriters' Laboratories, Inc. (UL) provides product listing service shall be listed and bear the listing mark.

D. Underwriter's Certificate: A New York Board of Fire Underwriters inspection or certificate is not required.

E. Equipment Qualifications For Products Other Than Those Specified:

1. At the time of submission provide written notice to the Owner of the intent to propose an "or equal" for products other than those specified. Make the "or equal" submission in a timely manner to allow the Owner sufficient time to review the proposed product, perform inspections and witness test demonstrations.
2. If products other than those specified are proposed for use furnish the name, address, and telephone numbers of at least 5 comparable installations that can prove the proposed products have performed satisfactorily for 3 years. Certify in writing that the Owner's Representative owners of the 5 comparable installations will allow inspection of their installation by the Owner's Representative and the Company Field Advisor.

a. Make arrangements with the Owner's Representative owners of 2 installations (selected by the Owner) for inspection of the installations by the Owner's Representative. Also obtain the services of the Company Field Advisor for the proposed products to be present. Notify the Owner a minimum of 3 weeks prior to the availability of the installations for the inspection, and provide at least one alternative date for each inspection.
b. Only references from the actual Owner's Representative owner or Owner's Representative owner's representative (Security Supervisor, Maintenance Supervisor, etc.) will be accepted. References from dealers, system installers or others, who are not the actual Owner's Representative owners of the proposed products, are not acceptable.

1) Verify the accuracy of all references submitted prior to submission and certify in writing that the accuracy of the information has been confirmed.

3. The product manufacturer shall have test facilities available that can demonstrate that the proposed products meet the contract requirements.

a. Make arrangements with the test facility for the Owner's Representative to witness test demonstrations. Also obtain the services of the Company Field Advisor for the proposed product to be present at the test facility. Notify the Owner a minimum of 3 weeks prior to the availability of the test facility, and provide at least one alternative date for the testing.

4. Provide written certification from the manufacturer that the proposed products are compatible for use with all other equipment proposed for use for this system and meet all contract requirements.

F. Company Field Advisor: Secure the services of the cable manufacturer's Company Field Advisor for a minimum of 4 working hours at the contract site for the following:

1. Witness installation of at least one splice and termination by each person who will be doing the actual cable splice and termination.
2. Certify with an affidavit that the aforementioned particulars are satisfactory and the cable is installed in accordance with cable manufacturer's recommendations.

PART 2 - PRODUCTS

2.1 DATE OF MANUFACTURER:

2.2 COPPER BUILDING WIRE

A. Description: Flexible, insulated, and uninsulated, drawn copper current-carrying conductor with an overall insulation layer or jacket, or both, rated 600 V or less.

B. Manufacturers: Subject to compliance with requirements, available manufacturers offering products that may be incorporated into the Work include, but are not limited to the following:

1. Cerro Wire LLC.
2. General Cable Technologies Corporation.
3. Southwire Company.
4. Or equal.

C. Standards:

1. Listed and labeled as defined in NFPA 70, by a qualified testing agency, and marked for intended location and use.
2. RoHS compliant.
3. Conductor and Cable Marking: Comply with wire and cable marking according to UL's "Wire and Cable Marking and Application Guide."

D. Conductors: Copper, complying with ASTM B3 for bare annealed copper and with [**ASTM B8**] [**ASTM B496**] for stranded conductors.

E. Conductor Insulation:

1. Type NM: Comply with UL 83 and UL 719.
2. [**Type RHH**] [**and**] [**Type RHW-2**]: Comply with UL 44.
3. [**Type USE-2**] [**and**] [**Type SE**]: Comply with UL 854.
4. Type TC-ER: Comply with NEMA WC 70/ICEA S-95-658 and UL 1277.
5. [**Type THHN**] [**and**] [**Type THWN-2**]: Comply with UL 83.
6. [**Type THW**] [**and**] [**Type THW-2**]: Comply with NEMA WC-70/ICEA S-95-658 and UL 83.
7. Type UF: Comply with UL 83 and UL 493.
8. Type XHHW-2: Comply with UL 44.

F. Shield:

1. Type TC-ER: Cable designed for use with VFCs, with oversized crosslinked polyethylene insulation, [**spiral-wrapped foil plus 85 percent coverage braided shields and insulated full-size ground wire**] [**dual spirally wrapped copper tape shields and three bare symmetrically applied ground wires**], and sunlight- and oil-resistant outer PVC jacket.

2.3 METAL-CLAD CABLE, TYPE MC

A. Description: A factory assembly of one or more current-carrying insulated conductors in an overall metallic sheath.

B. Manufacturers: Subject to compliance with requirements, available manufacturers offering products that may be incorporated into the Work include, but are not limited to the following:

1. Atkore International (AFC Cable Systems).
2. General Cable Technologies Corporation.
3. Southwire Company.

4. Or equsl.

C. Standards:

1. Listed and labeled as defined in NFPA 70, by a qualified testing agency, and marked for intended location and use.
2. Comply with UL 1569.
3. RoHS compliant.
4. Conductor and Cable Marking: Comply with wire and cable marking according to UL's "Wire and Cable Marking and Application Guide."

D. Circuits:

1. [**Single circuit**] [**and**] [**multi-circuit with color-coded conductors**].
2. Power-Limited Fire-Alarm Circuits: Comply with UL 1424.

E. Conductors: [**Copper, complying with ASTM B3 for bare annealed copper and with ASTM B8 for stranded conductors**].

F. Ground Conductor: [**Insulated**], color green.

G. Conductor Insulation:

1. Type TFN/THHN/THWN-2: Comply with UL 83.
2. Type XHHW-2: Comply with UL 44.

H. Armor: [**Steel**] or [**Aluminum**], interlocked.

I. Jacket: PVC applied over armor.

2.4 PHOTOVOLTAIC CABLE, TYPE PV

A. Description: Flexible, insulated, and uninsulated, drawn copper current-carrying conductor with an overall insulation layer or jacket, or both, rated [**2000**] [**600**] V.

B. Manufacturers: Subject to compliance with requirements, available manufacturers offering products that may be incorporated into the Work include, but are not limited to the following:

1. General Cable; General Cable Corporation.
2. Service Wire Co.
3. Southwire Company.
4. Or equal.

C. Standards:

1. Listed and labeled as defined in NFPA 70, by a qualified testing agency, and marked for intended location and use.
2. RoHS compliant.
3. Conductor and Cable Marking: Comply with wire and cable marking according to UL's "Wire and Cable Marking and Application Guide."

D. Conductors: Copper, complying with ASTM B3 for bare annealed copper and with ASTM B8 for stranded conductors.

E. Conductor Insulation: Comply with UL 44 and UL 4703.

2.5 MINERAL-INSULATED CABLE, TYPE MI

A. Description: Solid copper conductors encased in compressed metal oxide with an outer metallic sheath, rated 600 V or less.

B. Manufacturers: Subject to compliance with requirements, available manufacturers offering products that may be incorporated into the Work include, but are not limited to the following:

1. nVent (PYROTENAX).
2. Pentair.
3. Watlow Electric Manufacturing Company.
4. Or equal.

C. Standards:

1. Listed and labeled as defined in NFPA 70, by a qualified testing agency, and marked for intended location and use.
2. UL 2196 for fire resistance.
3. Conductor and Cable Marking: Comply with wire and cable marking according to UL's "Wire and Cable Marking and Application Guide."

D. Conductors: Copper, complying with ASTM B3 for bare annealed copper.

E. Insulation: [**Compressed magnesium oxide**]

F. Sheath: [**Copper**]

2.6 CONNECTORS AND SPLICES

A. Description: Factory-fabricated connectors, splices, and lugs of size, ampacity rating, material, type, and class for application and service indicated; listed and labeled as defined in NFPA 70, by a qualified testing agency, and marked for intended location and use.

B. Manufacturers: Subject to compliance with requirements, available manufacturers offering products that may be incorporated into the Work include, but are not limited to the following:

1. 3M Electrical Products.
2. Appleton - O-Z/Gedney; Emerson Electric Co., Automation Solutions.
3. Ideal Industries, Inc.
4. Or equal.

C. Jacketed Cable Connectors: For steel and aluminum jacketed cables, zinc die-cast with set screws, designed to connect conductors specified in this Section.

D. Lugs: One piece, seamless, designed to terminate conductors specified in this Section.

1. Material: [**Copper**] [**Aluminum**] [**Bronze**].
2. Type: [**One**] [**Two**] hole with [**standard**] [**long**] barrels.
3. Termination: [**Compression**] [**Crimp**].

E. Provide compression type fittings, set screw not permitted for EMT, RGS conduit installations.

PART 3 - EXECUTION

3.1 CONDUCTOR MATERIAL APPLICATIONS

A. Feeders:

1. Copper; solid for No. 10 AWG and smaller; stranded for No. 8 AWG and larger.
2. Copper for feeders smaller than No. 4 AWG; copper or aluminum for feeders No. 4 AWG and larger. Conductors shall be solid for No. 10 AWG and smaller; stranded for No. 8 AWG and larger.

B. Branch Circuits:

1. Copper. Solid for No. 10 AWG and smaller; stranded for No. 8 AWG and larger.
2. Copper. Solid for No. 12 AWG and smaller; stranded for No. 10 AWG and larger.

C. VFC Output Circuits Cable: Extra-flexible stranded for all sizes.

D. Power-Limited Fire Alarm and Control: Solid for No. 12 AWG and smaller.

E. PV Circuits: [**Copper**]. Solid for No. 10 AWG and smaller; stranded for No. 8 AWG and larger.

3.2 CONDUCTOR INSULATION AND MULTICONDUCTOR CABLE APPLICATIONS AND WIRING METHODS

A. Service Entrance: [**Type THHN/THWN-2, single conductors in raceway**] [**Type XHHW-2, single conductors in raceway**] [**Type USE, single conductor in raceway**] [**Mineral-insulated, metal-sheathed cable, Type MI**] [**Multiconductor cable, Type SE**].

B. Exposed Feeders: [**Type THHN/THWN-2, single conductors in raceway**] [**Type XHHW-2, single conductors in raceway**] [**Metal-clad cable, Type MC**] [**Mineral-insulated, metal-sheathed cable, Type MI**]

C. Feeders Concealed in Ceilings, Walls, Partitions, and Crawlspaces: [**Type THHN/THWN-2, single conductors in raceway**] [**Metal-clad cable, Type MC**] [**Mineral-insulated, metal-sheathed cable, Type MI**]

D. Feeders Concealed in Concrete, below Slabs-on-Grade, and Underground: [**Type THHN/THWN-2, single conductors in raceway**] [**Type XHHW-2, single conductors in raceway**] [**Underground feeder cable, Type UF**].

E. Feeders Installed below Raised Flooring: [**Type THHN/THWN-2, single conductors in raceway**] [**Metal-clad cable, Type MC**] [**Mineral-insulated, metal-sheathed cable, Type MI**].

F. Feeders in Cable Tray: [**Type THHN/THWN-2, single conductors in raceway**] [**Type XHHW-2, single conductors larger than No. 1/0 AWG**] [**Metal-clad cable, Type MC**] [**Mineral-insulated, metal-sheathed cable, Type MI**].

G. Exposed Branch Circuits, Including in Crawlspaces: [**Type THHN/THWN-2, single conductors in raceway**] [**Metal-clad cable, Type MC**] [**Mineral-insulated, metal-sheathed cable, Type MI**].

H. Branch Circuits Concealed in Ceilings, Walls, and Partitions: [**Type THHN/THWN-2, single conductors in raceway**] [**Metal-clad cable, Type MC**] [**Mineral-insulated, metal-sheathed cable, Type MI**].

I. Branch Circuits Concealed in Concrete, below Slabs-on-Grade, and Underground: [**Type THHN/THWN-2, single conductors in raceway**] [**Type XHHW-2, single conductors in raceway**] [**Underground branch-circuit cable, Type UF**].

J. Branch Circuits Installed below Raised Flooring: [**Type THHN/THWN-2, single conductors in raceway** [**Metal-clad cable, Type MC**] [**Mineral-insulated, metal-sheathed cable, Type MI**].

K. Branch Circuits in Cable Tray: [**Type THHN/THWN-2, single conductors in raceway**] [**Type XHHW-2, single conductors larger than No. 1/0 AWG**] [**Metal-clad cable, Type MC**] [**Mineral-insulated, metal-sheathed cable, Type MI**].

L. Cord Drops and Portable Appliance Connections: Type SO, hard service cord with stainless steel, wire-mesh, strain relief device at terminations to suit application.

M. VFC Output Circuits: [**Type XHHW-2 in metal conduit**] [**Type TC-ER cable with braided shield**] [**Type TC-ER cable with dual tape shield**].

N. PV Circuits, Type USE-2: For PV source circuits rated at 600 V or less.

O. PV Circuits, Type PV: For PV source circuits rated at [**600**] [**1000**] [**2000**] V.

3.3 INSTALLATION, GENERAL

A. Conceal cables in finished walls, ceilings, and floors unless otherwise indicated.

B. Complete raceway installation between conductor and cable termination points according to Section 260533 "Raceways and Boxes for Electrical Systems" prior to pulling conductors and cables.

C. Use manufacturer-approved pulling compound or lubricant where necessary; compound used must not deteriorate conductor or insulation. Do not exceed manufacturer's recommended maximum pulling tensions and sidewall pressure values.

D. Use pulling means, including fish tape, cable, rope, and basket-weave wire/cable grips, that will not damage cables or raceway.

3.4 INSTALLATION OF FIRE-ALARM WIRE AND CABLE

A. Comply with NECA 1 and NFPA 72.

1. Install plenum cable in environmental airspaces, including plenum ceilings.
2. Fire-alarm circuits and equipment control wiring associated with fire-alarm system shall be installed in a dedicated pathway system.

    a. Cables and pathways used for fire-alarm circuits, and equipment control wiring associated with fire-alarm system, may not contain any other wire or cable.

3. Fire-Rated Cables: Use of two-hour, fire-rated fire-alarm cables, NFPA 70, Types MI and CI, is permitted.
4. Signaling Line Circuits: Power-limited fire-alarm cables [**shall not**] be installed in the same cable or pathway as signaling line circuits.

B. Wiring within Enclosures: Separate power-limited and non-power-limited conductors as recommended by manufacturer. Install conductors parallel with or at right angles to sides and back of the enclosure. Bundle, lace, and train conductors to terminal points with no excess. Connect conductors that are terminated, spliced, or interrupted in any enclosure associated with fire-alarm system to terminal blocks. Mark each terminal according to system's wiring diagrams. Make all connections with approved crimp-on terminal spade lugs, pressure-type terminal blocks, or plug connectors.

C. Cable Taps: Use numbered terminal strips in junction, pull, and outlet boxes; cabinets; or equipment enclosures where circuit connections are made.

D. Color-Coding: Color-code fire-alarm conductors differently from the normal building power wiring. Use one color-code for alarm circuit wiring and another for supervisory circuits. Color-code audible alarm-indicating circuits

differently from alarm-initiating circuits. Use different colors for visible alarm-indicating devices. Paint fire-alarm system junction boxes and covers red.

E. Risers: Install at least two vertical cable risers to serve the fire-alarm system. Separate risers in close proximity to each other with a minimum one-hour-rated wall, so the loss of one riser does not prevent receipt or transmission of signals from other floors or zones.

F. Wiring to Remote Alarm Transmitting Device: 1-inch (25-mm) conduit between the fire-alarm control panel and the transmitter. Install number of conductors and electrical supervision for connecting wiring as needed to suit monitoring function.

3.5 CONNECTIONS

A. Tighten electrical connectors and terminals according to manufacturer's published torque-tightening values. If manufacturer's torque values are not indicated, use those specified in UL 486A-486B.

B. Make splices, terminations, and taps that are compatible with conductor material[**and that possess equivalent or better mechanical strength and insulation ratings than unspliced conductors**].

1. Use oxide inhibitor in each splice, termination, and tap for aluminum conductors.

C. Wiring at Outlets: Install conductor at each outlet, with at least [**6 inches (150 mm)**] of slack.

3.6 IDENTIFICATION

A. Identify and color-code conductors and cables according to Section 260553 "Identification for Electrical Systems."

B. Identify each spare conductor at each end with identity number and location of other end of conductor, and identify as spare conductor.

3.7 SLEEVE AND SLEEVE-SEAL INSTALLATION FOR ELECTRICAL PENETRATIONS

A. Install sleeves and sleeve seals at penetrations of exterior floor and wall assemblies. Comply with requirements in Section 260544 "Sleeves and Sleeve Seals for Electrical Raceways and Cabling."

3.8 FIRESTOPPING

3.9 FIELD QUALITY CONTROL

A. Administrant for Tests and Inspections:

1. Owner’s Representative will engage qualified testing agency to administer and perform tests and inspections.
2. Engage qualified testing agency to administer and perform tests and inspections.
3. Engage factory-authorized service representative Company Service Advisor to administer and perform tests and inspections on components, assemblies, and equipment installations, including connections.
4. Administer and perform tests and inspections [**with assistance of Company Service Advisor factory-authorized service representative**].

B. Tests and Inspections:

1. After installing conductors and cables and before electrical circuitry has been energized, test service entrance and feeder conductors for compliance with requirements.

2. After installing conductors and cables and before electrical circuitry has been energized, test [**service entrance and feeder conductors**] [**and**] [**conductors**] feeding the following critical equipment and services for compliance with requirements:

    a. Generator, Automatic transfer switches, panelboards, switchboards, communications rack equipment, and all equipment per Owner/Owner's Representatives direction.

3. Perform each of the following visual and electrical tests:

    a. Inspect exposed sections of conductor and cable for physical damage and correct connection according to the single-line diagram.
    b. Test bolted connections for high resistance using one of the following:

        1) A low-resistance ohmmeter.
        2) Calibrated torque wrench.
        3) Thermographic survey.

    c. Inspect compression-applied connectors for correct cable match and indentation.
    d. Inspect for correct identification.
    e. Inspect cable jacket and condition.
    f. Insulation-resistance test on each conductor for ground and adjacent conductors. Apply a potential of 500-V dc for 300-V rated cable and 1000-V dc for 600-V rated cable for a one-minute duration.
    g. Continuity test on each conductor and cable.
    h. Uniform resistance of parallel conductors.

4. Initial Infrared Scanning: After Substantial Completion, but before Final Acceptance, perform an infrared scan of each splice in conductors No. 3 AWG and larger. Remove box and equipment covers so splices are accessible to portable scanner. Correct deficiencies determined during the scan.

    a. Instrument: Use an infrared scanning device designed to measure temperature or to detect significant deviations from normal values. Provide calibration record for device.
    b. Record of Infrared Scanning: Prepare a certified report that identifies switches checked and that describes scanning results. Include notation of deficiencies detected, remedial action taken, and observations after remedial action.

5. Follow-up Infrared Scanning: Perform an additional follow-up infrared scan of each switch 11 months after date of Substantial Completion.

C. Cables will be considered defective if they do not pass tests and inspections.

D. Prepare test and inspection reports to record the following:

1. Procedures used.
2. Results that comply with requirements.
3. Results that do not comply with requirements, and corrective action taken to achieve compliance with requirements.

END OF SECTION 260519

SECTION 260523
CONTROL-VOLTAGE ELECTRICAL POWER CABLES

PART 1 - GENERAL

1.1 SUMMARY

A. Section Includes:

1. Backboards.
2. Category 5e balanced twisted pair cable.
3. Category 6 balanced twisted pair cable.
4. Category 6a balanced twisted pair cable.
5. Balanced twisted pair cabling hardware.
6. RS-485 cabling.
7. Low-voltage control cabling.
8. Control-circuit conductors.
9. Identification products.

1.2 DEFINITIONS

A. EMI: Electromagnetic interference.

B. Low Voltage: As defined in NFPA 70 for circuits and equipment operating at less than 50 V or for remote-control and signaling power-limited circuits.

C. Plenum: A space forming part of the air distribution system to which one or more air ducts are connected. An air duct is a passageway, other than a plenum, for transporting air to or from heating, ventilating, or air-conditioning equipment.

D. RCDD: Registered Communications Distribution Designer.

1.3 SUBMITTALS

A. Submittals for this section are subject to the re-evaluation fee identified in Article 4 of the General Conditions.

B. Manufacturer’s installation instructions shall be provided along with product data.

C. Submittals shall be provided in the order in which they are specified and tabbed (for combined submittals).

D. Product Data: For each type of product.

E. Submittals for this section are subject to the re-evaluation fee identified in Article 4 of the General Conditions.

F. Qualification Data: For testing agency, RCDD, layout technician, installation supervisor, and field inspector.

G. Source quality-control reports.

H. Field quality-control reports.

1.4 QUALITY ASSURANCE

A. Testing Agency Qualifications: Accredited by NETA.

1. Testing Agency's Field Supervisor: Currently certified by BICSI as an RCDD to supervise on-site testing.

PART 2 - PRODUCTS

2.1 PERFORMANCE REQUIREMENTS

A. Electrical Components, Devices, and Accessories: Listed and labeled as defined in NFPA 70, by a qualified testing agency, and marked for intended location and application.

B. Flame Travel and Smoke Density in Plenums: As determined by testing identical products according to NFPA 262, by a qualified testing agency. Identify products for installation in plenums with appropriate markings of applicable testing agency.

1. Flame Travel Distance: 60 inches or less.
2. Peak Optical Smoke Density: 0.5 or less.
3. Average Optical Smoke Density: 0.15 or less.

C. Flame Travel and Smoke Density for Riser Cables in Non-Plenum Building Spaces: As determined by testing identical products according to UL 1666.

D. Flame Travel and Smoke Density for Cables in Non-Riser Applications and Non-Plenum Building Spaces: As determined by testing identical products according to UL 1685.

E. RoHS compliant.

2.2 BACKBOARDS

A. Description: Plywood, [**fire-retardant treated,**]3/4 by 48 by 96 inches

2.3 CATEGORY 5e BALANCED TWISTED PAIR CABLE

A. Description: Four-pair, balanced-twisted pair cable, certified to meet transmission characteristics of Category 5e cable at frequencies up to 100 MHz.

B. Manufacturers: Subject to compliance with requirements, available manufacturers offering products that may be incorporated into the Work include, but are not limited to the following:

1. Belden Inc.
2. CommScope, Inc.
3. General Cable; Prysmian Group North America.
4. Or equal.

C. Standard: Comply with ICEA S-90-661, NEMA WC 63.1, and TIA-568-C.2 for Category 5e cables.

D. Conductors: 100-ohm, 24 AWG solid copper.

E. Shielding/Screening: [**Unshielded twisted pairs (UTP)**] [**Shielded twisted pairs (FTP)**] [**Screened twisted pairs (F/UTP)**] [**Screened and shielded twisted pairs (F/FTP)**].

F. Cable Rating: [**Riser**] [**Plenum**].

G. Jacket: [**White**] [**Gray**] [Blue] thermoplastic. Final color selections per Owner's Representative approval.

2.4 CATEGORY 6 BALANCED TWISTED PAIR CABLE

A. Description: Four-pair, balanced-twisted pair cable, [**with internal spline,**] certified to meet transmission characteristics of Category 6 cable at frequencies up to 250MHz.

B. Manufacturers: Subject to compliance with requirements, available manufacturers offering products that may be incorporated into the Work include, but are not limited to the following:

1. Belden CDT Networking Division/NORDX.
2. CommScope, Inc.
3. General Cable; Prysmian Group North America.
4. Or equal.

C. Standard: Comply with NEMA WC 66/ICEA S-116-732 and TIA-568-C.2 for Category 6 cables.

D. Conductors: 100-ohm, 23 AWG solid copper.

E. Shielding/Screening: [**Unshielded twisted pairs (UTP)**] [**Shielded twisted pairs (FTP)**] [**Screened twisted pairs (F/UTP)**] [**Screened and shielded twisted pairs (F/FTP)**].

F. Cable Rating: [**Riser**] [**Plenum**].

G. Jacket: [**White**] [**Gray**] [**Blue**] [**Yellow**] thermoplastic. Final color selections per Owner's Representative approval.

2.5 CATEGORY 6a BALANCED TWISTED PAIR CABLE

A. Description: Four-pair, balanced-twisted pair cable,[**with internal spline,**] certified to meet transmission characteristics of Category 6a cable at frequencies up to 500MHz.

B. Manufacturers: Subject to compliance with requirements, available manufacturers offering products that may be incorporated into the Work include, but are not limited to the following:

1. Belden CDT Networking Division/NORDX.
2. CommScope, Inc.
3. General Cable; Prysmian Group North America.
4. Or equal.

C. Standard: Comply with TIA-568-C.2 for Category 6a cables.

D. Conductors: 100-ohm, 23 AWG solid copper.

E. Shielding/Screening: [**Unshielded twisted pairs (UTP)**] [**Shielded twisted pairs (FTP)**] [**Screened twisted pairs (F/UTP)**] [**Screened and shielded twisted pairs (F/FTP)**].

F. Cable Rating: [**Riser**] [**Plenum**].

G. Jacket: [**White**] [**Gray**] [**Blue**] [**Yellow**] <**Insert color**> thermoplastic.

2.6 BALANCED TWISTED PAIR CABLE HARDWARE

A. Description: Hardware designed to connect, splice, and terminate balanced twisted pair copper communications cable.

B. Manufacturers: Subject to compliance with requirements, available manufacturers offering products that may be incorporated into the Work include, but are not limited to the following:

1. Belden CDT Networking Division/NORDX.
2. General Cable; Prysmian Group North America.
3. Leviton Manufacturing Co., Inc.
4. Or equal.

C. General Requirements for Balanced Twisted Pair Cable Hardware:

1. Comply with the performance requirements of [**Category 5e**] [**Category 6**] [**Category 6a**] [**Category 7**].
2. Comply with TIA-568-C.2, IDC type, with modules designed for punch-down caps or tools.
3. Cables shall be terminated with connecting hardware of same category or higher.

D. Source Limitations: [**Obtain balanced twisted pair cable hardware from single source from single manufacturer**] [**Obtain balanced twisted pair cable hardware from same manufacturer as balanced twisted pair cable, from single source**].

E. Connecting Blocks: [**110-style IDC for Category 5e**] [**110-style IDC for Category 6**] [**66-style IDC for Category 5e**]. Provide blocks for the number of cables terminated on the block, plus [**25**] percent spare, integral with connector bodies, including plugs and jacks where indicated.

F. Cross-Connect: Modular array of connecting blocks arranged to terminate building cables and permit interconnection between cables.

1. Number of Terminals per Field: [**One**] for each conductor in assigned cables.

G. Patch Panel: Modular panels housing numbered jack units with IDC-type connectors at each jack location for permanent termination of pair groups of installed cables.

1. Features:

a. Universal T568A and T568B wiring labels.
b. Labeling areas adjacent to conductors.
c. Replaceable connectors.
d. 24 or 48 ports.

2. Construction: 16-gauge steel and mountable on 19-inch equipment racks.
3. Number of Jacks per Field: One for each four-pair [**cable indicated**] [**conductor group of indicated cables, plus spares and blank positions adequate to suit specified expansion criteria**].

H. Patch Cords: Factory-made, four-pair cables in [**36-inch**] [**48-inch**]lengths; terminated with an eight-position modular plug at each end.

1. Patch cords shall have bend-relief-compliant boots and color-coded icons to ensure performance. Patch cords shall have latch guards to protect against snagging.
2. Patch cords shall have color-coded boots for circuit identification.

I. Plugs and Plug Assemblies:

1. Male; eight position; color-coded modular telecommunications connector designed for termination of a single four-pair 100-ohm unshielded or shielded balanced twisted pair cable.
2. Comply with IEC 60603-7-1, IEC 60603-7-2, IEC 60603-7-3, IEC 60603-7-4, and IEC 60603-7.5.
3. Marked to indicate transmission performance.

J. Jacks and Jack Assemblies:

1. Female; eight position; modular; fixed telecommunications connector designed for termination of a single four-pair 100-ohm unshielded or shielded balanced twisted pair cable.
2. Designed to snap-in to a patch panel or faceplate.
3. Standards:

   a. Category 5e, unshielded balanced twisted pair cable shall comply with IEC 60603-7-2.
   b. Category 5e, shielded balanced twisted pair cable shall comply with IEC 60603-7-3.
   c. Category 6, unshielded balanced twisted pair cable shall comply with IEC 60603-7-4.
   d. Category 6, shielded balanced twisted pair cable shall comply with IEC 60603-7.5.
   e. Category 6a, unshielded balanced twisted pair cable shall comply with IEC 60603-7-41.
   f. Category 6a, shielded balanced twisted pair cable shall comply with IEC 60603-7.51.

4. Marked to indicate transmission performance.

K. Faceplate:

1. [**Two**][**Four**] [**Six**] port, vertical single-gang faceplates designed to mount to single-gang wall boxes.
2. [**Eight**] [**Ten**] [**Twelve**] port, vertical double-gang faceplates designed to mount to double-gang wall boxes.
3. Plastic Faceplate: High-impact plastic. Coordinate color with Section 262726 "Wiring Devices."
4. Metal Faceplate: [**Stainless steel**] [**Brass**] , complying with requirements in Section 262726 "Wiring Devices."
5. For use with snap-in jacks accommodating any combination of balanced twisted pair, optical fiber, and coaxial work area cords.

   a. Flush mounting jacks, positioning the cord at a 45-degree angle.

L. Legend:

1. Machine printed, in the field, using adhesive-tape label.
2. Snap-in, clear-label covers and machine-printed paper inserts.

2.7 TWIN-AXIAL DATA HIGHWAY CABLE

A. Standard Cable: NFPA 70, Type CM.

1. Paired, pairs, [**No. 20**] [**No. 22**] [**No. 24**] AWG, stranded [**(7x28)**] [**(7x30)**] [**(7x32)**] tinned-copper conductors.
2. Polypropylene insulation.
3. Individual aluminum foil-polyester tape shielded pairs with 100 percent shield coverage.
4. PVC jacket.
5. Pairs are cabled on common axis with No. 24 AWG, stranded (7x32) tinned-copper drain wire.
6. Flame Resistance: Comply with UL 1685.

B. Plenum-Rated Cable: NFPA 70, Type CMP.

1. Paired, pairs, [**No. 20**] [**No. 22**] [**No. 24**] AWG, stranded [**(7x28)**] [**(7x30)**] [**(7x32)**] tinned-copper conductors.
2. Plastic insulation.
3. Individual aluminum foil-polyester tape shielded pairs with 100 percent shield coverage.
4. Plastic jacket.
5. Pairs are cabled on common axis with No. 24 AWG, stranded (7x32) tinned-copper drain wire.
6. Flame Resistance: Comply with NFPA 262.

2.8 RS-232 CABLE

A. Manufacturers: Subject to compliance with requirements, available manufacturers offering products that may be incorporated into the Work include, but are not limited to the following:

1. Belden Inc.
2. General Cable; Prysmian Group North America.
3. Southwire Company.
4. Or equal.

B. PVC-Jacketed, TIA 232-F:

1. [**Three**] [**Nine**], No. 22 AWG, stranded (7x30) tinned copper conductors.
2. Polypropylene insulation.
3. Aluminum foil-polyester tape shield with 100 percent shield coverage.
4. PVC jacket.
5. Conductors are cabled on common axis with No. 24 AWG, stranded (7x32) tinned copper drain wire.
6. NFPA 70 Type: Type CM.
7. Flame Resistance: Comply with UL 1581.

C. Plenum-Type, TIA 232-F:

1. [**Three**] [**Nine**], No. 22 AWG, stranded (7x30) tinned copper conductors.
2. PE insulation.
3. Aluminum foil-polyester tape shield with 100 percent shield coverage.
4. Fluorinated ethylene propylene jacket.
5. Conductors are cabled on common axis with No. 24 AWG, stranded (7x32) tinned copper drain wire.
6. Flame Resistance: Comply with NFPA 262.

2.9 RS-485 CABLE

A. Standard Cable: NFPA 70, Type CMG.

1. Paired, [**one pair**] [**two pairs**], twisted, No. 22 AWG, stranded (7x30) tinned-copper conductors.
2. PVC insulation.
3. Unshielded.
4. PVC jacket.
5. Flame Resistance: Comply with UL 1685.

B. Plenum-Rated Cable: NFPA 70, Type CMP.

1. Paired, [**one pair**] [**two pairs**], No. 22 AWG, stranded (7x30) tinned-copper conductors.
2. Fluorinated ethylene propylene insulation.
3. Unshielded.
4. Fluorinated ethylene propylene jacket.
5. Flame Resistance: NFPA 262.

2.10 LOW-VOLTAGE CONTROL CABLE

A. Paired Cable: NFPA 70, Type CMG.

1. [**One**][**Multi-**]pair, twisted, [**No. 16 AWG, stranded (19x29)**] [**No. 18 AWG, stranded (19x30)**] tinned-copper conductors.
2. PVC insulation.
3. Unshielded.
4. PVC jacket.
5. Flame Resistance: Comply with UL 1685.

B. Plenum-Rated, Paired Cable: NFPA 70, Type CMP.

1. [**One**][**Multi-**]pair, twisted, [**No. 16 AWG, stranded (19x29)**] [**No. 18 AWG, stranded (19x30)**] tinned-copper conductors.
2. PVC insulation.
3. Unshielded.
4. PVC jacket.
5. Flame Resistance: Comply with NFPA 262.

2.11 CONTROL-CIRCUIT CONDUCTORS

A. Manufacturers: Subject to compliance with requirements, available manufacturers offering products that may be incorporated into the Work include, but are not limited to the following:

1. General Cable; Prysmian Group North America.
2. Service Wire Co.
3. Southwire Company.
4. Or equal.

B. Class 1 Control Circuits: Stranded copper, [**Type THHN/THWN-2, complying with UL 83 in raceway**] [**Type THW, complying with UL 83 in raceway**] [**Type XHHW-2, complying with UL 44 in raceway** [**Type MC, complying with UL 1569**].

C. Class 2 Control Circuits: Stranded copper, [**Type THHN/THWN-2, complying with UL 83 in raceway**] [**Type XHHW-2, complying with UL 44 in raceway**] [**power-limited cable, concealed in building finishes**] [**power-limited tray cable, in cable tray**].

D. Class 3 Remote-Control and Signal Circuits: Stranded copper, [**Type THHN/THWN-2, complying with UL 83 in raceway**] [**Type XHHW-2, complying with UL 44 in raceway**] [**power-limited cable, concealed in building finishes**] [**power-limited tray cable, in cable tray**] [**Type TW or Type TF, complying with UL 83, in raceway**].

E. Class 2 Control Circuits and Class 3 Remote-Control and Signal Circuits That Supply Critical Circuits: Circuit Integrity (CI) cable.

1. Smoke control signaling and control circuits.
2. Fire alarm signaling and riser cable

2.12 FIRE-ALARM WIRE AND CABLE

A. Manufacturers: Subject to compliance with requirements, available manufacturers offering products that may be incorporated into the Work include, but are not limited to the following:

1. Allied Wire & Cable Inc.
2. CommScope, Inc.
3. West Penn Wire.
4. Or equal.

B. General Wire and Cable Requirements: NRTL listed and labeled as complying with NFPA 70, Article 760.

C. Signaling Line Circuits: Twisted, shielded pair, [**not less than**] [**No. 14 AWG**] [**size as recommended by system manufacturer**].

1. Circuit Integrity Cable: Twisted shielded pair, NFPA 70, Article 760, Classification CI, for power-limited fire-alarm signal service Type FPL. NRTL listed and labeled as complying with UL 1424 and UL 2196 for a two-hour rating.

D. Non-Power-Limited Circuits: Solid-copper conductors with 600-V rated, 75 deg C, color-coded insulation, and complying with requirements in UL 2196 for a two-hour rating.

1. Low-Voltage Circuits: No. 16 AWG, minimum, in pathway.
2. Line-Voltage Circuits: No. 12 AWG, minimum, in pathway.
3. Multiconductor Armored Cable: NFPA 70, Type MC, copper conductors, Type TFN/THHN conductor insulation, copper drain wire, copper armor[**with outer jacket**] with red identifier stripe, NTRL listed for fire-alarm and cable tray installation, plenum rated.

2.13 SOURCE QUALITY CONTROL

A. Testing Agency: **[Owner's Representative will engage**] [**Engage**] a qualified testing agency to evaluate cables.

B. Factory test twisted pair cables according to TIA-568-C.2.

C. Cable will be considered defective if it does not pass tests and inspections.

D. Prepare test and inspection reports.

PART 3 - EXECUTION

3.1 EXAMINATION

A. Test cables on receipt at Project site.

1. Test each pair of twisted pair cable for open and short circuits.

3.2 INSTALLATION OF RACEWAYS AND BOXES

1. Outlet boxes shall be no smaller than 2 inches wide, 3 inches high, and 2-1/2 inches deep.
2. Outlet boxes for cables shall be no smaller than 4 inches square by [**1-1/2 inches**] [**2-1/8 inches**] deep with extension ring sized to bring edge of ring to within 1/8 inch of the finished wall surface.
3. Flexible metal conduit shall not be used.

B. Comply with TIA-569-D for pull-box sizing and length of conduit and number of bends between pull points.

C. Install manufactured conduit sweeps and long-radius elbows if possible.

D. Raceway Installation in Equipment Rooms:

1. Position conduit ends adjacent to a corner on backboard if a single piece of plywood is installed, or in the corner of the room if multiple sheets of plywood are installed around perimeter walls of the room.
2. Install cable trays to route cables if conduits cannot be located in these positions.
3. Secure conduits to backboard if entering the room from overhead.
4. Extend conduits [**3 inches**] <**Insert dimension**> above finished floor.
5. Install metal conduits with grounding bushings and connect with grounding conductor to grounding system.

E. Backboards: Install backboards with 96-inch dimension vertical. Butt adjacent sheets tightly and form smooth gap-free corners and joints.

3.3 INSTALLATION OF CONDUCTORS AND CABLES

A. Comply with NECA 1.

B. General Requirements for Cabling:

1. Comply with TIA-568-C Series of standards.
2. Comply with BICSI ITSIMM, Ch. 5, "Copper Structured Cabling Systems."
3. Terminate all conductors; no cable shall contain unterminated elements. Make terminations only at indicated outlets, terminals, and cross-connect and patch panels.
4. Cables may not be spliced and shall be continuous from terminal to terminal. Do not splice cable between termination, tap, or junction points.
5. Cables serving a common system may be grouped in a common raceway. Install network cabling and control wiring and cable in separate raceway from power wiring. Do not group conductors from different systems or different voltages.
6. Secure and support cables at intervals not exceeding 30 inches and not more than 6 inches from cabinets, boxes, fittings, outlets, racks, frames, and terminals.
7. Bundle, lace, and train conductors to terminal points without exceeding manufacturer's limitations on bending radii, but not less than radii specified in BICSI ITSIMM, Ch. 5, "Copper Structured Cabling Systems." Install lacing bars and distribution spools.
8. Do not install bruised, kinked, scored, deformed, or abraded cable. Remove and discard cable if damaged during installation and replace it with new cable.
9. Cold-Weather Installation: Bring cable to room temperature before dereeling. Do not use heat lamps for heating.
10. Pulling Cable: Comply with BICSI ITSIMM, Ch. 5, "Copper Structured Cabling Systems." Monitor cable pull tensions.
11. Support: Do not allow cables to lie on removable ceiling tiles.
12. Secure: Fasten securely in place with hardware specifically designed and installed so as to not damage cables.
13. Provide strain relief.
14. Keep runs short. Allow extra length for connecting to terminals. Do not bend cables in a radius less than 10 times the cable OD. Use sleeves or grommets to protect cables from vibration at points where they pass around sharp corners and through penetrations.
15. Ground wire shall be copper, and grounding methods shall comply with IEEE C2. Demonstrate ground resistance.

C. Balanced Twisted Pair Cable Installation:

1. Comply with TIA-568-C.2.
2. Do not untwist balanced twisted pair cables more than 1/2 inch at the point of termination to maintain cable geometry.

D. Installation of Control-Circuit Conductors:

1. Install wiring in raceways.
2. Use insulated spade lugs for wire and cable connection to screw terminals.

E. Open-Cable Installation:

1. Install cabling with horizontal and vertical cable guides in telecommunications spaces with terminating hardware and interconnection equipment.
2. Suspend copper cable not in a wireway or pathway a minimum of 8 inches above ceilings by cable supports not more than [**30 inches**] <**Insert dimension**> apart.
3. Cable shall not be run through or on structural members or in contact with pipes, ducts, or other potentially damaging items. Do not run cables between structural members and corrugated panels.

F. Installation of Cable Routed Exposed under Raised Floors:

1. Install plenum-rated cable only.
2. Install cabling after the flooring system has been installed in raised floor areas.
3. Below each feed point, neatly coil a minimum of [**72 inches**] of cable in a coil not less than [**12 inches**] in diameter.

G. Separation from EMI Sources:

1. Comply with BICSI TDMM and TIA-569-D recommendations for separating unshielded copper voice and data communications cable from potential EMI sources including electrical power lines and equipment.
2. Separation between open communications cables or cables in nonmetallic raceways and unshielded power conductors and electrical equipment shall be as follows:

    a. Electrical Equipment or Circuit Rating Less Than 2 kVA: A minimum of 5 inches.
    b. Electrical Equipment or Circuit Rating between 2 and 5 kVA: A minimum of 12 inches.
    c. Electrical Equipment or Circuit Rating More Than 5 kVA: A minimum of 24 inches.

3. Separation between communications cables in grounded metallic raceways and unshielded power lines or electrical equipment shall be as follows:

    a. Electrical Equipment or Circuit Rating Less Than 2 kVA: A minimum of 2-1/2 inches.
    b. Electrical Equipment or Circuit Rating between 2 and 5 kVA: A minimum of 6 inches.
    c. Electrical Equipment or Circuit Rating More Than 5 kVA: A minimum of 12 inches.

4. Separation between communications cables in grounded metallic raceways and power lines and electrical equipment located in grounded metallic conduits or enclosures shall be as follows:

    a. Electrical Equipment or Circuit Rating Less Than 2 kVA: No requirement.
    b. Electrical Equipment or Circuit Rating between 2 and 5 kVA: A minimum of 3 inches.
    c. Electrical Equipment or Circuit Rating More Than 5 kVA: A minimum of 6 inches.

5. Separation between Communications Cables and Electrical Motors and Transformers, 5 kVA or 5 HP and Larger: A minimum of 48 inches.
6. Separation between Communications Cables and Fluorescent Fixtures: A minimum of 5 inches.

3.4 REMOVAL OF CONDUCTORS AND CABLES

A. Remove abandoned conductors and cables. Abandoned conductors and cables are those installed that are not terminated at equipment and are not identified with a tag for future use.

3.5 CONTROL-CIRCUIT CONDUCTORS

A. Minimum Conductor Sizes:

1. Class 1 remote-control and signal circuits; [**No 14**] AWG.
2. Class 2 low-energy, remote-control, and signal circuits; [**No. 16**] AWG.
3. Class 3 low-energy, remote-control, alarm, and signal circuits; [**No 12**] AWG.

3.6 FIRESTOPPING

A. Comply with TIA-569-D, Annex A, "Firestopping."

B. Comply with BICSI TDMM, "Firestopping" Chapter.

3.7 GROUNDING

A. For data communication wiring, comply with TIA-607-B and with BICSI TDMM, "Bonding and Grounding (Earthing)" Chapter.

3.8 IDENTIFICATION

A. Identify data and communications system components, wiring, and cabling according to TIA-606-B; label printers shall use label stocks, laminating adhesives, and inks complying with UL 969.

B. Identify each wire on each end and at each terminal with a number-coded identification tag. Each wire shall have a unique tag.

3.9 FIELD QUALITY CONTROL

A. Testing Agency: Owner’s Representative will engage a qualified testing agency to perform tests and inspections.

B. Testing Agency: Engage a qualified testing agency to perform tests and inspections.

C. Manufacturer's Field Service: Engage a Company Service Advisor to test and inspect components, assemblies, and equipment installations, including connections.

D. Perform tests and inspections [**with the assistance of a** Company Service Advisor].

E. Tests and Inspections:

1. Visually inspect cable jacket materials for UL or third-party certification markings. Inspect cabling terminations to confirm color-coding for pin assignments, and inspect cabling connections to confirm compliance with TIA-568-C.1.
2. Visually inspect cable placement, cable termination, grounding and bonding, equipment and patch cords, and labeling of all components.
3. Test cabling for direct-current loop resistance, shorts, opens, intermittent faults, and polarity between conductors. Test operation of shorting bars in connection blocks. Test cables after termination, but not after cross-connection.

    a. Test instruments shall meet or exceed applicable requirements in TIA-568-C.2. Perform tests with a tester that complies with performance requirements in its "Test Instruments (Normative)" Annex, complying with measurement accuracy specified in its "Measurement Accuracy (Informative)" Annex. Use only test cords and adapters that are qualified by test equipment manufacturer for channel or link test configuration.

F. Document data for each measurement. Print data for submittals in a summary report that is formatted using Table 10.1 in BICSI TDMM as a guide, or transfer the data from the instrument to the computer, save as text files, print, and submit.

G. End-to-end cabling will be considered defective if it does not pass tests and inspections.

H. Prepare test and inspection reports.

END OF SECTION 260523

SECTION 260526

GROUNDING AND BONDING FOR ELECTRICAL SYSTEMS

PART 1 - GENERAL

1.1 RELATED DOCUMENTS

A. Drawings and general provisions of the Contract, including General and Supplementary Conditions and Division 01 Specification Sections, apply to this Section

1.2 SUMMARY

A. Section includes grounding and bonding systems and equipment.

B. Section includes grounding and bonding systems and equipment, plus the following special applications:

1. Underground distribution grounding.
2. Ground bonding common with lightning protection system.
3. Foundation steel electrodes.

1.3 SUBMITTALS

A. Submittals for this section are subject to the re-evaluation fee identified in Article 4 of the General Conditions.

B. Manufacturer’s installation instructions shall be provided along with product data.

C. Submittals shall be provided in the order in which they are specified and tabbed (for combined submittals).

D. Product Data: For each type of product indicated.

E. Submittals for this section are subject to the re-evaluation fee identified in Article 4 of the General Conditions.

F. Coordination Drawings: Plans showing dimensioned locations of grounding features specified in "Field Quality Control" Article, including the following:

1. Test wells.
2. Ground rods.
3. Ground rings.
4. Grounding arrangements and connections for separately derived systems.

G. Field quality-control reports.

1.4 CLOSEOUT SUBMITTALS

A. Operation and Maintenance Data: For grounding to include in emergency, operation, and maintenance manuals.

1. Plans showing as-built, dimensioned locations of system described in "Field Quality Control" Article, including the following:

a. Test wells.
b. Ground rods.
c. Ground rings.
d. Grounding arrangements and connections for separately derived systems.

e. Instructions for periodic testing and inspection of grounding features at [**test wells**] [**ground rings**] [**grounding connections for separately derived systems**] based on [**NETA MTS**] [**NFPA 70B**] .

1) Tests shall determine if ground-resistance or impedance values remain within specified maximums, and instructions shall recommend corrective action if values do not.
2) Include recommended testing intervals.

1.5 QUALITY ASSURANCE

A. Testing Agency Qualifications: Certified by NETA.

PART 2 - PRODUCTS

2.1 SYSTEM DESCRIPTION

A. Electrical Components, Devices, and Accessories: Listed and labeled as defined in NFPA 70, by a qualified testing agency, and marked for intended location and application.

B. Comply with UL 467 for grounding and bonding materials and equipment.

2.2 MANUFACTURERS

A. Manufacturers: Subject to compliance with requirements, available manufacturers offering products that may be incorporated into the Work include, but are not limited to the following:

1. Blackburn/T&B Corp.
2. Burndy; Hubbell Incorporated, Construction and Energy.
3. O-Z/Gedney; Emerson Electric Co., Automation Solutions, Appleton Group.
4. Or equal.

2.3 CONDUCTORS

A. Insulated Conductors: [**Copper**] [**or**] [**tinned-copper**] wire or cable insulated for 600 V unless otherwise required by applicable Code or authorities having jurisdiction.

B. Bare Copper Conductors:

1. Solid Conductors: ASTM B3.
2. Stranded Conductors: ASTM B8.
3. Tinned Conductors: ASTM B33.
4. Bonding Cable: 28 kcmil, 14 strands of No. 17 AWG conductor, 1/4 inch in diameter.
5. Bonding Conductor: No. 4 or No. 6 AWG, stranded conductor.
6. Bonding Jumper: Copper tape, braided conductors terminated with copper ferrules; 1-5/8 inches wide and 1/16 inch thick.
7. Tinned Bonding Jumper: Tinned-copper tape, braided conductors terminated with copper ferrules; 1-5/8 inches wide and 1/16 inch thick.

C. Grounding Bus: Predrilled rectangular bars of annealed copper, [**1/4 by 4 inches**] in cross section, with 9/32-inch holes spaced 1-1/8 inches apart. Stand-off insulators for mounting shall comply with UL 891 for use in switchboards, 600 V and shall be Lexan or PVC, impulse tested at 5000 V.

2.4 CONNECTORS

A. Listed and labeled by an NRTL acceptable to authorities having jurisdiction for applications in which used and for specific types, sizes, and combinations of conductors and other items connected.

B. Welded Connectors: Exothermic-welding kits of types recommended by kit manufacturer for materials being joined and installation conditions.

C. Bus-Bar Connectors: Mechanical type, cast silicon bronze, solderless [**compression**] [**exothermic**]-type wire terminals, and long-barrel, two-bolt connection to ground bus bar.

D. Bus-Bar Connectors: Compression type, copper or copper alloy, with two wire terminals.

E. Beam Clamps: Mechanical type, terminal, ground wire access from four directions, with dual, tin-plated or silicon bronze bolts.

F. Cable-to-Cable Connectors: Compression type, copper or copper alloy.

G. Cable Tray Ground Clamp: Mechanical type, zinc-plated malleable iron.

H. Conduit Hubs: Mechanical type, terminal with threaded hub.

I. Ground Rod Clamps: Mechanical type, copper or copper alloy, terminal with [**hex head bolt**] [**socket set screw**].

J. Ground Rod Clamps: Mechanical type, copper or copper alloy, terminal with hex head bolt.

K. Lay-in Lug Connector: Mechanical type, [**copper rated for direct burial**] terminal with set screw.

L. Service Post Connectors: Mechanical type, bronze alloy terminal, in short- and long-stud lengths, capable of single and double conductor connections.

M. Signal Reference Grid Clamp: Mechanical type, stamped-steel terminal with hex head screw.

N. Straps: Solid copper, [**cast-bronze clamp**] [**copper lugs**]. Rated for 600 A.

O. Tower Ground Clamps: Mechanical type, copper or copper alloy, terminal [**one**] [**two**]-piece clamp.

P. U-Bolt Clamps: Mechanical type, copper or copper alloy, terminal listed for direct burial.

Q. Water Pipe Clamps:

1. Mechanical type, two pieces with [**zinc-plated**] [**stainless-steel**] bolts.

   a. Material: [**Die-cast zinc alloy**].
   b. Listed for direct burial.

2. U-bolt type with malleable-iron clamp and [**copper ground connector**] [**copper ground connector rated for direct burial**].

2.5 GROUNDING ELECTRODES

A. Ground Rods: [**Copper-clad**]; [**3/4 inch by 10 feet**]

B. Chemical-Enhanced Grounding Electrodes: Copper tube, straight or L-shaped, charged with [**nonhazardous electrolytic chemical salts**]

1. Termination: Factory-attached No. 4/0 AWG bare conductor at least 48 inches long.
2. Backfill Material: Electrode manufacturer's recommended material.

C. Ground Plates: 1/4 inch thick, hot-dip galvanized.

PART 3 - EXECUTION

3.1 APPLICATIONS

A. Conductors: Install solid conductor for [**No. 8**] AWG and smaller, and stranded conductors for [**No. 6**] AWG and larger unless otherwise indicated.

B. Underground Grounding Conductors: Install bare [**tinned-**]copper conductor, [**No. 2/0**] AWG minimum.

1. Bury at least 30 inches below grade.
2. Duct-Bank Grounding Conductor: Bury 12 inches above duct bank when indicated as part of duct-bank installation.

C. Grounding Conductors: Green-colored insulation with continuous yellow stripe.

D. Isolated Grounding Conductors: Green-colored insulation with more than one continuous yellow stripe. On feeders with isolated ground, identify grounding conductor where visible to normal inspection, with alternating bands of green and yellow tape, with at least three bands of green and two bands of yellow.

E. Grounding Bus: Install in electrical equipment rooms, in rooms housing service equipment, and elsewhere as indicated.

1. Install bus horizontally, on insulated spacers 2 inches minimum from wall, 6 inches above finished floor unless otherwise indicated.
2. Where indicated on both sides of doorways, route bus up to top of door frame, across top of doorway, and down; connect to horizontal bus.

F. Conductor Terminations and Connections:

1. Pipe and Equipment Grounding Conductor Terminations: Bolted connectors.
2. Underground Connections: Welded connectors except at test wells and as otherwise indicated.
3. Connections to Ground Rods at Test Wells: Bolted connectors.
4. Connections to Structural Steel: Welded connectors.

3.2 GROUNDING AT THE SERVICE

A. Equipment grounding conductors and grounding electrode conductors shall be connected to the ground bus. Install a main bonding jumper between the neutral and ground buses.

3.3 GROUNDING SEPARATELY DERIVED SYSTEMS

A. Generator: Install grounding electrode(s) at the generator location. The electrode shall be connected to the equipment grounding conductor and to the frame of the generator.

3.4 GROUNDING UNDERGROUND DISTRIBUTION SYSTEM COMPONENTS

A. Comply with IEEE C2 grounding requirements.

B. Grounding Manholes and Handholes: Install a driven ground rod through manhole or handhole floor, close to wall, and set rod depth so 4 inches will extend above finished floor. If necessary, install ground rod before manhole is placed and provide No. 1/0 AWG bare, tinned-copper conductor from ground rod into manhole through a waterproof sleeve in manhole wall. Protect ground rods passing through concrete floor with a double wrapping of pressure-sensitive insulating tape or heat-shrunk insulating sleeve from 2 inches above to 6 inches below concrete. Seal floor opening with waterproof, nonshrink grout.

C. Grounding Connections to Manhole Components: Bond exposed-metal parts such as inserts, cable racks, pulling irons, ladders, and cable shields within each manhole or handhole, to ground rod or grounding conductor. Make connections with No. 4 AWG minimum, stranded, hard-drawn copper bonding conductor. Train conductors level or plumb around corners and fasten to manhole walls. Connect to cable armor and cable shields according to written instructions by manufacturer of splicing and termination kits.

3.5 EQUIPMENT GROUNDING

A. Install insulated equipment grounding conductors with all feeders and branch circuits.

B. Install insulated equipment grounding conductors with the following items, in addition to those required by NFPA 70:

1. Feeders and branch circuits.
2. Lighting circuits.
3. Receptacle circuits.
4. Single-phase motor and appliance branch circuits.
5. Three-phase motor and appliance branch circuits.
6. Flexible raceway runs.
7. Armored and metal-clad cable runs.
8. Busway Supply Circuits: Install insulated equipment grounding conductor from grounding bus in the switchgear, switchboard, or distribution panel to equipment grounding bar terminal on busway.

C. Air-Duct Equipment Circuits: Install insulated equipment grounding conductor to duct-mounted electrical devices operating at 120 V and more, including air cleaners, heaters, dampers, humidifiers, and other duct electrical equipment. Bond conductor to each unit and to air duct and connected metallic piping.

D. Water Heater, Heat-Tracing, and Antifrost Heating Cables: Install a separate insulated equipment grounding conductor to each electric water heater and heat-tracing cable. Bond conductor to heater units, piping, connected equipment, and components.

E. Isolated Grounding Receptacle Circuits: Install an insulated equipment grounding conductor connected to the receptacle grounding terminal. Isolate conductor from raceway and from panelboard grounding terminals. Terminate at equipment grounding conductor terminal of the applicable derived system or service unless otherwise indicated.

F. Isolated Equipment Enclosure Circuits: For designated equipment supplied by a branch circuit or feeder, isolate equipment enclosure from supply circuit raceway with a nonmetallic raceway fitting listed for the purpose. Install fitting where raceway enters enclosure and install a separate insulated equipment grounding conductor. Isolate conductor from raceway and from panelboard grounding terminals. Terminate at equipment grounding conductor terminal of the applicable derived system or service unless otherwise indicated.

G. Poles Supporting Outdoor Lighting Fixtures: Install grounding electrode and a separate insulated equipment grounding conductor in addition to grounding conductor installed with branch-circuit conductors.

H. Metallic Fences: Comply with requirements of IEEE C2.

1. Grounding Conductor: Bare [**, tinned**] copper, not less than [**No. 8**]AWG.
2. Gates: Shall be bonded to the grounding conductor with a flexible bonding jumper.
3. Barbed Wire: Strands shall be bonded to the grounding conductor.

3.6 FENCE GROUNDING

A. Fence Grounding: Install at maximum intervals of [**1500 feet**]except as follows:

1. Fences within 100 Feet of Buildings, Structures, Walkways, and Roadways: Ground at maximum intervals of [**750 feet**]

a. Gates and Other Fence Openings: Ground fence on each side of opening.

1) Bond metal gates to gate posts.
2) Bond across openings, with and without gates, except at openings indicated as intentional fence discontinuities. Use No. 2 AWG wire and bury it at least 18 inches below finished grade.

B. Protection at Crossings of Overhead Electrical Power Lines: Ground fence at location of crossing and at a maximum distance of 150 feet on each side of crossing.

C. Fences Enclosing Electrical Power Distribution Equipment: Ground as required by IEEE C2 unless otherwise indicated.

D. Grounding Method: At each grounding location, drive a grounding rod vertically until the top is 6 inches below finished grade. Connect rod to fence with No. 6 AWG conductor. Connect conductor to each fence component at grounding location.

E. Bonding Method for Gates: Connect bonding jumper between gate post and gate frame.

F. Bonding to Lightning-Protection System: If fence terminates at lightning-protected building or structure, ground the fence and bond the fence grounding conductor to lightning-protection down conductor or lightning-protection grounding conductor, complying with NFPA 780.

3.7 INSTALLATION

A. Grounding Conductors: Route along shortest and straightest paths possible unless otherwise indicated or required by Code. Avoid obstructing access or placing conductors where they may be subjected to strain, impact, or damage.

B. Ground Bonding Common with Lightning Protection System: Comply with NFPA 780 and UL 96 when interconnecting with lightning protection system. Bond electrical power system ground directly to lightning protection system grounding conductor at closest point to electrical service grounding electrode. Use bonding conductor sized same as system grounding electrode conductor and install in conduit.

C. Ground Rods: Drive rods until tops are 2 inches below finished floor or final grade unless otherwise indicated.

1. Interconnect ground rods with grounding electrode conductor below grade and as otherwise indicated. Make connections without exposing steel or damaging coating if any.
2. Use exothermic welds for all below-grade connections.

3. For grounding electrode system, install at least [**three**] rods spaced at least one-rod length from each other and located at least the same distance from other grounding electrodes, and connect to the service grounding electrode conductor.

D. Test Wells: Ground rod driven through drilled hole in bottom of handhole. Handholes are specified in Section 260543 "Underground Ducts and Raceways for Electrical Systems," and shall be at least 12 inches deep, with cover.

1. Install at least one test well for each service unless otherwise indicated. Install at the ground rod electrically closest to service entrance. Set top of test well flush with finished grade or floor.

E. Bonding Straps and Jumpers: Install in locations accessible for inspection and maintenance except where routed through short lengths of conduit.

1. Bonding to Structure: Bond straps directly to basic structure, taking care not to penetrate any adjacent parts.
2. Bonding to Equipment Mounted on Vibration Isolation Hangers and Supports: Install bonding so vibration is not transmitted to rigidly mounted equipment.
3. Use exothermic-welded connectors for outdoor locations; if a disconnect-type connection is required, use a bolted clamp.

F. Grounding and Bonding for Piping:

1. Metal Water Service Pipe: Install insulated copper grounding conductors, in conduit, from building's main service equipment, or grounding bus, to main metal water service entrances to building. Connect grounding conductors to main metal water service pipes; use a bolted clamp connector or bolt a lug-type connector to a pipe flange by using one of the lug bolts of the flange. Where a dielectric main water fitting is installed, connect grounding conductor on street side of fitting. Bond metal grounding conductor conduit or sleeve to conductor at each end.
2. Water Meter Piping: Use braided-type bonding jumpers to electrically bypass water meters. Connect to pipe with a bolted connector.
3. Bond each aboveground portion of gas piping system downstream from equipment shutoff valve.

G. Bonding Interior Metal Ducts: Bond metal air ducts to equipment grounding conductors of associated fans, blowers, electric heaters, and air cleaners. Install [**tinned**] bonding jumper to bond across flexible duct connections to achieve continuity.

H. Grounding for Steel Building Structure: Install a driven ground rod at base of each corner column and at intermediate exterior columns at distances not more than 60 feet apart.

I. Ground Ring: Install a grounding conductor, electrically connected to each building structure ground rod and to each [**steel column**],extending around the perimeter of [**building**].

1. Install tinned-copper conductor not less than [**No. 2/0**] AWG for ground ring and for taps to building steel.
2. Bury ground ring not less than [**24 inches**] from building's foundation.

J. Concrete-Encased Grounding Electrode (Ufer Ground): Fabricate according to NFPA 70; use a minimum of [**20 feet**] of bare copper conductor not smaller than [**No. 4**] AWG.

1. If concrete foundation is less than [**20 feet**] long, coil excess conductor within base of foundation.
2. Bond grounding conductor to reinforcing steel in at least four locations and to anchor bolts. Extend grounding conductor below grade and connect to building's grounding grid or to grounding electrode external to concrete.

K. Concrete-Encased Grounding Electrode (Ufer Ground): Fabricate according to NFPA 70; using electrically conductive coated steel reinforcing bars or rods, at least 20 feet long. If reinforcing is in multiple pieces, connect together by the usual steel tie wires or exothermic welding to create the required length.

L. Connections: Make connections so possibility of galvanic action or electrolysis is minimized. Select connectors, connection hardware, conductors, and connection methods so metals in direct contact are galvanically compatible.

1. Use electroplated or hot-tin-coated materials to ensure high conductivity and to make contact points closer in order of galvanic series.
2. Make connections with clean, bare metal at points of contact.
3. Make aluminum-to-steel connections with stainless-steel separators and mechanical clamps.
4. Make aluminum-to-galvanized-steel connections with tin-plated copper jumpers and mechanical clamps.
5. Coat and seal connections having dissimilar metals with inert material to prevent future penetration of moisture to contact surfaces.

3.8 FIELD QUALITY CONTROL

A. Testing Agency: Engage a qualified testing agency to perform tests and inspections.

B. Manufacturer's Field Service: Engage a Company Service Advisor to test and inspect components, assemblies, and equipment installations, including connections.

C. Perform tests and inspections [**with the assistance of a Company Service Advisor**].

D. Tests and Inspections:

1. After installing grounding system but before permanent electrical circuits have been energized, test for compliance with requirements.
2. Inspect physical and mechanical condition. Verify tightness of accessible, bolted, electrical connections with a calibrated torque wrench according to manufacturer's written instructions.
3. Test completed grounding system at each location where a maximum ground-resistance level is specified, at service disconnect enclosure grounding terminal [**, at ground test wells**] [**, and at individual ground rods**]. Make tests at ground rods before any conductors are connected.

    a. Measure ground resistance no fewer than two full days after last trace of precipitation and without soil being moistened by any means other than natural drainage or seepage and without chemical treatment or other artificial means of reducing natural ground resistance.
    b. Perform tests by fall-of-potential method according to IEEE 81.

4. Prepare dimensioned Drawings locating each test well, ground rod and ground-rod assembly, and other grounding electrodes. Identify each by letter in alphabetical order, and key to the record of tests and observations. Include the number of rods driven and their depth at each location and include observations of weather and other phenomena that may affect test results. Describe measures taken to improve test results.

E. Prepare test and inspection reports.

F. Report measured ground resistances that exceed the following values:

1. Power and Lighting Equipment or System with Capacity of 500 kVA and Less: [**10**] ohms.
2. Power and Lighting Equipment or System with Capacity of 500 to 1000 kVA: [**5**] ohms.
3. Power and Lighting Equipment or System with Capacity More Than 1000 kVA: [**3**] ohms.
4. Power Distribution Units or Panelboards Serving Electronic Equipment: [**3**] ohm(s).
5. Pad-Mounted Equipment: [**5**] ohms.
6. Manhole Grounds: [**10**] ohms.

G. Excessive Ground Resistance: If resistance to ground exceeds specified values, notify Architect promptly and include recommendations to reduce ground resistance.

END OF SECTION 260526

SECTION 260529
HANGERS AND SUPPORTS FOR ELECTRICAL SYSTEMS

PART 1 - GENERAL

1.1 RELATED DOCUMENTS

A. Drawings and general provisions of the Contract, including General and Supplementary Conditions and Division 01 Specification Sections, apply to this Section.

1.2 SUMMARY

A. Section Includes:

1. Steel slotted support systems.
2. Conduit and cable support devices.
3. Support for conductors in vertical conduit.
4. Structural steel for fabricated supports and restraints.
5. Mounting, anchoring, and attachment components, including powder-actuated fasteners, mechanical expansion anchors, concrete inserts, clamps, through bolts, toggle bolts, and hanger rods.
6. Fabricated metal equipment support assemblies.

1.3 SUBMITTALS

A. Submittals for this section are subject to the re-evaluation fee identified in Article 4 of the General Conditions.

B. Manufacturer's installation instructions shall be provided along with product data.

C. Submittals shall be provided in the order in which they are specified and tabbed (for combined submittals).

D. Product Data: For each type of product.

1. Include construction details, material descriptions, dimensions of individual components and profiles, and finishes for the following:

a. Slotted support systems, hardware, and accessories.
b. Clamps.
c. Hangers.
d. Sockets.
e. Eye nuts.
f. Fasteners.
g. Anchors.
h. Saddles.
i. Brackets.

2. Include rated capacities and furnished specialties and accessories.

E. Shop Drawings: [**Signed and sealed by a qualified Professional Engineer.**] For fabrication and installation details for electrical hangers and support systems.

1. Hangers. Include product data for components.
2. Slotted support systems.
3. Equipment supports.

4. Vibration Isolation Base Details: Detail fabrication including anchorages and attachments to structure and to supported equipment. Include adjustable motor bases, rails, and frames for equipment mounting.

F. Delegated-Design Submittal: For hangers and supports for electrical systems.

1. Include design calculations and details of hangers.
2. Include design calculations for seismic restraints.

G. Submittals for this section are subject to the re-evaluation fee identified in Article 4 of the General Conditions.

H. Coordination Drawings: Reflected ceiling plan(s) and other details, drawn to scale, on which the following items are shown and coordinated with each other, using input from installers of the items involved:

1. Suspended ceiling components.
2. Ductwork, piping, fittings, and supports.
3. Structural members to which hangers and supports will be attached.
4. Size and location of initial access modules for acoustical tile.
5. Items penetrating finished ceiling, including the following:

a. Luminaires.
b. Air outlets and inlets.
c. Speakers.
d. Access panels.
e. Projectors.

I. Seismic Qualification Data: Certificates, for hangers and supports for electrical equipment and systems, accessories, and components, from manufacturer.

1. Basis for Certification: Indicate whether withstand certification is based on actual test of assembled components or on calculation.
2. Dimensioned Outline Drawings of Equipment Unit: Identify center of gravity and locate and describe mounting and anchorage provisions.
3. Detailed description of equipment anchorage devices on which the certification is based and their installation requirements.

J. Welding certificates.

1.4 QUALITY ASSURANCE

A. Welding Qualifications: Qualify procedures and personnel according to [**AWS D1.1/D1.1M**] [**AWS D1.2]/D1.2M**].

B. Welding Qualifications: Qualify procedures and personnel according to the following:

1. AWS D1.1/D1.1M.
2. AWS D1.2/D1.2M.

PART 2 - PRODUCTS

2.1 PERFORMANCE REQUIREMENTS

A. Seismic Performance: Hangers and supports shall withstand the effects of earthquake motions determined according to [**ASCE/SEI 7**]

1. The term "withstand" means "the supported equipment and systems will remain in place without separation of any parts when subjected to the seismic forces specified [**and the supported equipment and systems will be fully operational after the seismic event**]."
2. Component Importance Factor: [**1.5**] [**1.0**].

B. Surface-Burning Characteristics: Comply with ASTM E84; testing by a qualified testing agency. Identify products with appropriate markings of applicable testing agency.

1. Flame Rating: Class 1.
2. Self-extinguishing according to ASTM D635.

2.2 SUPPORT, ANCHORAGE, AND ATTACHMENT COMPONENTS

A. Steel Slotted Support Systems: Preformed steel channels and angles with minimum 13/32-inch- (10-mm-) diameter holes at a maximum of 8 inches (200 mm) o.c. in at least one surface.

1. Manufacturers: Subject to compliance with requirements, available manufacturers offering products that may be incorporated into the Work include, but are not limited to the following:

   a. Atkore International (Unistrut).
   b. Eaton (B-line).
   c. nVent (CADDY).
   d. Or equal.

2. Standard: Comply with MFMA-4 factory-fabricated components for field assembly.
3. Material for Channel, Fittings, and Accessories: [Galvanized steel] [Plain steel] [Stainless steel, Type 304] [Stainless steel, Type 316].
4. Channel Width: [Selected for applicable load criteria] [**1-5/8 inches (41.25 mm)**] [**1-1/4 inches (31.75 mm)**] [**13/16 inches (20.64 mm)**]
5. Metallic Coatings: Hot-dip galvanized after fabrication and applied according to MFMA-4.
6. Nonmetallic Coatings: Manufacturer's standard PVC, polyurethane, or polyester coating applied according to MFMA-4.
7. Painted Coatings: Manufacturer's standard painted coating applied according to MFMA-4.
8. Protect finishes on exposed surfaces from damage by applying a strippable, temporary protective covering before shipping.

B. Aluminum Slotted Support Systems: Extruded-aluminum channels and angles with minimum 13/32-inch- (10-mm-) diameter holes at a maximum of 8 inches (200 mm) o.c. in at least one surface.

1. Manufacturers: Subject to compliance with requirements, available manufacturers offering products that may be incorporated into the Work include, but are not limited to the following:

   a. Atkore International (Unistrut).
   b. Cooper Industries, Inc.
   c. Flex-Strut Inc.
   d. Or equal.

2. Standard: Comply with MFMA-4 factory-fabricated components for field assembly.
3. Channel Material: 6063-T5 aluminum alloy.
4. Fittings and Accessories Material: 5052-H32 aluminum alloy.
5. Channel Width: [Selected for applicable load criteria] [**1-5/8 inches (41.25 mm)**] [**1-1/4 inches (31.75 mm)**] [**13/16 inches (20.64 mm)**]
6. Nonmetallic Coatings: Manufacturer's standard PVC, polyurethane, or polyester coating applied according to MFMA-4.
7. Painted Coatings: Manufacturer's standard painted coating applied according to MFMA-4.

8. Protect finishes on exposed surfaces from damage by applying a strippable, temporary protective covering before shipping.

C. Nonmetallic Slotted Support Systems: Structural-grade, factory-formed, glass-fiber-resin channels and angles with minimum 13/32-inch- (10-mm-) diameter holes at a maximum of 8 8 inches (200 mm) o.c, in at least one surface.

1. Manufacturers: Subject to compliance with requirements, available manufacturers offering products that may be incorporated into the Work include, but are not limited to the following:

a. Atkore International (Allied Tube & Conduit).
b. Eaton (B-line).
c. G-Strut.
d. Or equal.

2. Standard: Comply with MFMA-4 factory-fabricated components for field assembly.
3. Channel Width: [Selected for applicable load criteria] [**1-5/8 inches (41.25 mm)**] [**1-1/4 inches (31.75 mm)**] [**13/16 inches (20.64 mm)**] <Insert dimension>.
4. Fittings and Accessories: Products provided by channel and angle manufacturer and designed for use with those items.
5. Fitting and Accessory Materials: Same as those for channels and angles[**, except metal items may be stainless steel**].
6. Rated Strength: Selected to suit applicable load criteria.
7. Protect finishes on exposed surfaces from damage by applying a strippable, temporary protective covering before shipping.

D. Conduit and Cable Support Devices: [**Steel**] hangers, clamps, and associated fittings, designed for types and sizes of raceway or cable to be supported.

E. Support for Conductors in Vertical Conduit: Factory-fabricated assembly consisting of threaded body and insulating wedging plug or plugs for nonarmored electrical conductors or cables in riser conduits. Plugs shall have number, size, and shape of conductor gripping pieces as required to suit individual conductors or cables supported. Body shall be made of malleable iron.

F. Structural Steel for Fabricated Supports and Restraints: ASTM A36/A36M steel plates, shapes, and bars; black and galvanized.

G. Mounting, Anchoring, and Attachment Components: Items for fastening electrical items or their supports to building surfaces include the following:

1. Powder-Actuated Fasteners: Threaded-steel stud, for use in hardened portland cement concrete, steel, or wood, with tension, shear, and pullout capacities appropriate for supported loads and building materials where used.

a. Manufacturers: Subject to compliance with requirements, available manufacturers offering products that may be incorporated into the Work include, but are not limited to the following:

1) Hilti, Inc.
2) ITW Ramset/Red Head; Illinois Tool Works, Inc.
3) MKT Fastening, LLC.
4) Or equal.

2. Mechanical-Expansion Anchors: Insert-wedge-type, [**zinc-coated**] [**stainless**] steel, for use in hardened portland cement concrete, with tension, shear, and pullout capacities appropriate for supported loads and building materials where used.

a. Manufacturers: Subject to compliance with requirements, available manufacturers offering products that may be incorporated into the Work include, but are not limited to the following:

1) Eaton (B-line).

2) Hilti, Inc.
3) ITW Ramset/Red Head; Illinois Tool Works, Inc.
4) Or equal.

3. Concrete Inserts: Steel or malleable-iron, slotted support system units are similar to MSS Type 18 units and comply with MFMA-4 or MSS SP-58.
4. Clamps for Attachment to Steel Structural Elements: MSS SP-58 units are suitable for attached structural element.
5. Through Bolts: Structural type, hex head, and high strength. Comply with ASTM F3125/F3125M, Grade A325 (Grade A325M).
6. Toggle Bolts: [**All**] [**Stainless**]-steel springhead type.
7. Hanger Rods: Threaded steel.

2.3 FABRICATED METAL EQUIPMENT SUPPORT ASSEMBLIES

A. Description: Welded or bolted structural-steel shapes, shop or field fabricated to fit dimensions of supported equipment.

PART 3 - EXECUTION

3.1 APPLICATION

A. Comply with the following standards for application and installation requirements of hangers and supports, except where requirements on Drawings or in this Section are stricter:

1. NECA 1.
2. NECA 101
3. NECA 102.
4. NECA 105.
5. NECA 111.

B. Maximum Support Spacing and Minimum Hanger Rod Size for Raceways: Space supports for EMT, IMC, and RMC as [**required by**] [**scheduled in NECA 1, where its Table 1 lists maximum spacings that are less than those stated in**] NFPA 70. Minimum rod size shall be 1/4 inch (6 mm) in diameter.

C. Multiple Raceways or Cables: Install trapeze-type supports fabricated with steel slotted [**or other**] support system, sized so capacity can be increased by at least [**25**] percent in future without exceeding specified design load limits.

1. Secure raceways and cables to these supports with [two-bolt conduit clamps] [single-bolt conduit clamps] [single-bolt conduit clamps using spring friction action for retention in support channel].

D. Spring-steel clamps designed for supporting single conduits without bolts may be used for 1-1/2-inch (38-mm) and smaller raceways serving branch circuits and communication systems above suspended ceilings, and for fastening raceways to trapeze supports.

3.2 SUPPORT INSTALLATION

A. Comply with NECA 1 and NECA 101 for installation requirements except as specified in this article.

B. Raceway Support Methods: In addition to methods described in NECA 1, [**EMT**] [**and**] [**RMC**] may be supported by openings through structure members, according to NFPA 70.

C. Strength of Support Assemblies: Where not indicated, select sizes of components so strength will be adequate to carry present and future static loads within specified loading limits. Minimum static design load used for strength determination shall be weight of supported components plus 200 lb200 lb (90 kg).

D. Mounting and Anchorage of Surface-Mounted Equipment and Components: Anchor and fasten electrical items and their supports to building structural elements by the following methods unless otherwise indicated by code:

1. To Wood: Fasten with lag screws or through bolts.
2. To New Concrete: Bolt to concrete inserts.
3. To Masonry: Approved toggle-type bolts on hollow masonry units and expansion anchor fasteners on solid masonry units.
4. To Existing Concrete: Expansion anchor fasteners.
5. Instead of expansion anchors, powder-actuated driven threaded studs provided with lock washers and nuts may be used in existing standard-weight concrete 4 inches (100 mm) thick or greater. Do not use for anchorage to lightweight-aggregate concrete or for slabs less than 4 inches (100 mm) thick.
6. To Steel: [Welded threaded studs complying with AWS D1.1/D1.1M, with lock washers and nuts] [Beam clamps (MSS SP-58, Type 19, 21, 23, 25, or 27), complying with MSS SP-69] [Spring-tension clamps].
7. To Light Steel: Sheet metal screws.
8. Items Mounted on Hollow Walls and Nonstructural Building Surfaces: Mount cabinets, panelboards, disconnect switches, control enclosures, pull and junction boxes, transformers, and other devices on slotted-channel racks attached to substrate[**by means that comply with seismic-restraint strength and anchorage requirements**].

E. Drill holes for expansion anchors in concrete at locations and to depths that avoid the need for reinforcing bars.

3.3 INSTALLATION OF FABRICATED METAL SUPPORTS

A. Cut, fit, and place miscellaneous metal supports accurately in location, alignment, and elevation to support and anchor electrical materials and equipment.

B. Field Welding: Comply with AWS D1.1/D1.1M.

3.4 CONCRETE BASES

A. Construct concrete bases of dimensions indicated, but not less than 4 inches (100 mm) larger in both directions than supported unit, and so anchors will be a minimum of 10 bolt diameters from edge of the base.

B. Use [**3000-psi (20.7-MPa)**] , 28-day compressive-strength concrete. Concrete materials, reinforcement, and placement requirements are specified in Section 033000 "Cast-in-Place Concrete."

C. Anchor equipment to concrete base as follows:

1. Place and secure anchorage devices. Use supported equipment manufacturer's setting drawings, templates, diagrams, instructions, and directions furnished with items to be embedded.
2. Install anchor bolts to elevations required for proper attachment to supported equipment.
3. Install anchor bolts according to anchor-bolt manufacturer's written instructions.

3.5 PAINTING

A. Touchup: Clean field welds and abraded areas of shop paint. Paint exposed areas immediately after erecting hangers and supports. Use same materials as used for shop painting. Comply with SSPC-PA 1 requirements for touching up field-painted surfaces.

1. Apply paint by brush or spray to provide minimum dry film thickness of 2.0 mils (0.05 mm).

B. Galvanized Surfaces: Clean welds, bolted connections, and abraded areas and apply galvanizing-repair paint to comply with ASTM A780.

END OF SECTION 260529

SECTION 260533
RACEWAYS AND BOXES FOR ELECTRICAL SYSTEMS

PART 1 - GENERAL

1.1 RELATED DOCUMENTS

A. Drawings and general provisions of the Contract, including General and Supplementary Conditions and Division 01 Specification Sections, apply to this Section.

1.2 SUMMARY

A. Section Includes:

1. Metal conduits and fittings.
2. Nonmetallic conduits and fittings.
3. Metal wireways and auxiliary gutters.
4. Nonmetal wireways and auxiliary gutters.
5. Surface raceways.
6. Boxes, enclosures, and cabinets.
7. Handholes and boxes for exterior underground cabling.

1.3 DEFINITIONS

A. GRC: Galvanized rigid steel conduit.

B. IMC: Intermediate metal conduit.

1.4 SUBMITTALS

A. Submittals for this section are subject to the re-evaluation fee identified in Article 4 of the General Conditions.

B. Manufacturer's installation instructions shall be provided along with product data.

C. Submittals shall be provided in the order in which they are specified and tabbed (for combined submittals).

D. Product Data: For surface raceways, wireways and fittings, floor boxes, hinged-cover enclosures, and cabinets.

E. Submit an Environmental Product Declaration (EPD) from the manufacturer for steel conduit within this specification section, if available. A statement of the contractor's good faith effort to obtain the EPD shall be provided if not available.

1. Manufacturer-provided EPDs must be Product Specific Type III (Third-Party Reviewed), in adherence with ISO 14025 *Environmental labels and declarations*, ISO 14044 *Environmental management – Life cycle assessment*, and ISO 21930 *Core rules for environmental product declarations of construction products and services.*

F. Shop Drawings: For custom enclosures and cabinets. Include plans, elevations, sections, and attachment details.

G. Samples: For [**wireways**] [**nonmetallic wireways**] [**and**] [**surface raceways**] and for each color and texture specified, [**12 inches (300 mm)**] long.

H. Submittals for this section are subject to the re-evaluation fee identified in Article 4 of the General Conditions.

PART 2 - PRODUCTS

2.1 METAL CONDUITS AND FITTINGS

A. Metal Conduit:

1. Manufacturers: Subject to compliance with requirements, available manufacturers offering products that may be incorporated into the Work include, but are not limited to the following:

   a. Allied Tube & Conduit Corp.
   b. Western Tube & Conduit Corp.
   c. Wheatland Tube Co.
   d. Or equal.

2. Listing and Labeling: Listed and labeled as defined in NFPA 70, by a qualified testing agency, and marked for intended location and application.
3. GRC: Comply with ANSI C80.1 and UL 6.
4. ARC: Comply with ANSI C80.5 and UL 6A.
5. IMC: Comply with ANSI C80.6 and UL 1242.
6. PVC-Coated Steel Conduit: PVC-coated [**rigid steel conduit**].

   a. Comply with NEMA RN 1.
   b. Coating Thickness: 0.040 inch (1 mm), minimum.

7. EMT: Comply with ANSI C80.3 and UL 797.
8. FMC: Comply with UL 1; [**zinc-coated steel**].
9. LFMC: Flexible steel conduit with PVC jacket and complying with UL 360.

B. Metal Fittings:

1. Manufacturers: Subject to compliance with requirements, available manufacturers offering products that may be incorporated into the Work include, but are not limited to the following:

   a. Cooper/Crouse-Hinds.
   b. OZGedney Co.
   c. Thomas & Betts Corp.
   d. Or equal.

2. Comply with NEMA FB 1 and UL 514B.
3. Listing and Labeling: Listed and labeled as defined in NFPA 70, by a qualified testing agency, and marked for intended location and application.
4. Fittings, General: Listed and labeled for type of conduit, location, and use.
5. Conduit Fittings for Hazardous (Classified) Locations: Comply with UL 1203 and NFPA 70.
6. Fittings for EMT:

   a. Material: [**Steel**].
   b. Type: [**compression**].

7. Expansion Fittings: PVC or steel to match conduit type, complying with UL 651, rated for environmental conditions where installed, and including flexible external bonding jumper.
8. Coating for Fittings for PVC-Coated Conduit: Minimum thickness of 0.040 inch (1 mm), with overlapping sleeves protecting threaded joints.

C. Joint Compound for IMC, GRC, or ARC: Approved, as defined in NFPA 70, by authorities having jurisdiction for use in conduit assemblies, and compounded for use to lubricate and protect threaded conduit joints from corrosion and to enhance their conductivity.

2.2 NONMETALLIC CONDUITS AND FITTINGS

A. Nonmetallic Conduit: Use only when encased in concrete outside the building footprint for underground service entrance conductors for the Fire Alarm System and Telecommunications System. Install in accordance with the utility company requirements. Provide adapter fittings to convert from RNMC to RGC before entering the building.

1. Manufacturers: Subject to compliance with requirements, available manufacturers offering products that may be incorporated into the Work include, but are not limited to the following:

    a. Cantex, Inc.
    b. Carlon.
    c. National Pipe & Plastic Inc.
    d. Or equal.

2. Listing and Labeling: Nonmetallic conduit shall be listed and labeled as defined in NFPA 70, by a qualified testing agency, and marked for intended location and application.
3. Fiberglass:

    a. Comply with NEMA TC 14.
    b. Comply with UL 2515 for aboveground raceways.
    c. Comply with UL 2420 for belowground raceways.

4. ENT: Comply with NEMA TC 13 and UL 1653.
5. RNC: [**Type EPC-40-PVC**], complying with NEMA TC 2 and UL 651 unless otherwise indicated.
6. LFNC: Comply with UL 1660.
7. Rigid HDPE: Comply with UL 651A.
8. Continuous HDPE: Comply with UL 651A.
9. Coilable HDPE: Preassembled with conductors or cables and complying with ASTM D3485.
10. RTRC: Comply with UL 2515A and NEMA TC 14.

B. Nonmetallic Fittings:

1. Manufacturers: Subject to compliance with requirements, available manufacturers offering products that may be incorporated into the Work include, but are not limited to the following:

    a. Cantex, Inc.
    b. Carlon.
    c. National Pipe & Plastic Inc.
    d. Or equal.

2. Fittings, General: Listed and labeled for type of conduit, location, and use.
3. Fittings for ENT and RNC: Comply with NEMA TC 3; match to conduit or tubing type and material.

    a. Fittings for LFNC: Comply with UL 514B.

4. Solvents and Adhesives: As recommended by conduit manufacturer.

2.3 METAL WIREWAYS AND AUXILIARY GUTTERS

A. Manufacturers: Subject to compliance with requirements, available manufacturers offering products that may be incorporated into the Work include, but are not limited to the following:

1. Mono-Systems Inc.
2. Thomas & Betts Corp.
3. Wiremold Co.
4. Or equal.

B. Description: Sheet metal, complying with UL 870 and NEMA 250, [**Type 1**] [**Type 3R**] [**Type 4**] [**Type 12**] unless otherwise indicated, and sized according to NFPA 70.

1. Metal wireways installed outdoors shall be listed and labeled as defined in NFPA 70, by a qualified testing agency, and marked for intended location and application.

C. Fittings and Accessories: Include covers, couplings, offsets, elbows, expansion joints, adapters, hold-down straps, end caps, and other fittings to match and mate with wireways as required for complete system.

D. Wireway Covers: **[Hinged type] [Screw-cover type] [Flanged-and-gasketed type**] unless otherwise indicated.

E. Finish: Manufacturer's standard enamel finish.

2.4 NONMETALLIC WIREWAYS AND AUXILIARY GUTTERS

A. Manufacturers: Subject to compliance with requirements, available manufacturers offering products that may be incorporated into the Work include, but are not limited to the following:

1. Hoffman.
2. Carlon.
3. National Pipe & Plastics Inc.
4. Or equal.

B. Listing and Labeling: Nonmetallic wireways and auxiliary gutters shall be listed and labeled as defined in NFPA 70, by a qualified testing agency, and marked for intended location and application.

C. Description: Fiberglass polyester, extruded and fabricated to required size and shape, without holes or knockouts. Cover shall be gasketed with oil-resistant gasket material and fastened with captive screws treated for corrosion resistance. Connections shall be flanged and have stainless-steel screws and oil-resistant gaskets.

D. Description: PVC, extruded and fabricated to required size and shape, and having snap-on cover, mechanically coupled connections, and plastic fasteners.

E. Fittings and Accessories: Couplings, offsets, elbows, expansion joints, adapters, hold-down straps, end caps, and other fittings shall match and mate with wireways as required for complete system.

F. Solvents and Adhesives: As recommended by conduit manufacturer.

2.5 SURFACE RACEWAYS

A. Listing and Labeling: Surface raceways and tele-power poles shall be listed and labeled as defined in NFPA 70, by a qualified testing agency, and marked for intended location and application.

B. Surface Metal Raceways: Galvanized steel with snap-on covers complying with UL 5. [**Manufacturer's standard enamel finish in color selected by Architect**] [**Prime coated, ready for field painting**].

1. Manufacturers: Subject to compliance with requirements, available manufacturers offering products that may be incorporated into the Work include, but are not limited to the following:

a. MonoSystems, Inc.

b. Wiremold; Legrand North America, LLC.
c. Wiring Device-Kellems; Hubbell Incorporated, Commercial, and Industrial.
d. Or equal.

C. Surface Nonmetallic Raceways: Two- or three-piece construction, complying with UL 5A, and manufactured of rigid PVC with texture and color selected by Architect from [**manufacturer's standard**] [**custom**] colors. Product shall comply with UL 94 V-0 requirements for self-extinguishing characteristics.

1. Manufacturers: Subject to compliance with requirements, available manufacturers offering products that may be incorporated into the Work include, but are not limited to the following:

a. Hubbell Premise Wiring; Hubbell Incorporated, Commercial and Industrial.
b. Panduit Corp.
c. Wiremold; Legrand North America, LLC.
d. Or equal.

2.6 BOXES, ENCLOSURES, AND CABINETS

A. Manufacturers: Subject to compliance with requirements, available manufacturers offering products that may be incorporated into the Work include, but are not limited to the following:

1. Appleton - O-Z/Gedney; Emerson Electric Co., Automation Solutions.
2. Eaton (Crouse-Hinds).
3. Hubbell Incorporated.
4. Or equal.

B. General Requirements for Boxes, Enclosures, and Cabinets: Boxes, enclosures, and cabinets installed in wet locations shall be listed for use in wet locations.

C. Sheet Metal Outlet and Device Boxes: Comply with NEMA OS 1 and UL 514A.

D. Cast-Metal Outlet and Device Boxes: Comply with NEMA FB 1, [**ferrous alloy**] [**aluminum**], Type FD, with gasketed cover.

E. Nonmetallic Outlet and Device Boxes: Comply with NEMA OS 2 and UL 514C.

F. Metal Floor Boxes:

1. Material: [**Cast metal**] [**or**] [**sheet metal**].
2. Type: [**Fully adjustable**] [**Semi-adjustable**].
3. Shape: Rectangular.
4. Listing and Labeling: Metal floor boxes shall be listed and labeled as defined in NFPA 70, by a qualified testing agency, and marked for intended location and application.

G. Nonmetallic Floor Boxes: Nonadjustable, [**round**] [**rectangular**].

1. Listing and Labeling: Nonmetallic floor boxes shall be listed and labeled as defined in NFPA 70, by a qualified testing agency, and marked for intended location and application.

H. Luminaire Outlet Boxes: Nonadjustable, designed for attachment of luminaire weighing 50 lb (23 kg). Outlet boxes designed for attachment of luminaires weighing more than 50 lb (23 kg) shall be listed and marked for the maximum allowable weight.

I. Paddle Fan Outlet Boxes: Nonadjustable, designed for attachment of paddle fan weighing 70 lb (32 kg).

1. Listing and Labeling: Paddle fan outlet boxes shall be listed and labeled as defined in NFPA 70, by a qualified testing agency, and marked for intended location and application.

J. Small Sheet Metal Pull and Junction Boxes: NEMA OS 1.

K. Cast-Metal Access, Pull, and Junction Boxes: Comply with NEMA FB 1 and UL 1773, [cast aluminum] [galvanized, cast iron] with gasketed cover.

L. Box extensions used to accommodate new building finishes shall be of same material as recessed box.

M. Device Box Dimensions: [**4 inches square by 2-1/8 inches deep (100 mm square by 60 mm deep)**] [**4 inches by 2-1/8 inches by 2-1/8 inches deep (100 mm by 60 mm by 60 mm deep)**]

N. Gangable boxes [are allowed] where approved by EOR.

O. Hinged-Cover Enclosures: Comply with UL 50 and NEMA 250, [**Type 1**] [**Type 3R**] [**Type 4**] [**Type 12**] with continuous-hinge cover with flush latch unless otherwise indicated.

1. Metal Enclosures: Steel, finished inside and out with manufacturer's standard enamel.
2. Nonmetallic Enclosures: [**Plastic**] [**Fiberglass**].
3. Interior Panels: Steel; all sides finished with manufacturer's standard enamel.

P. Cabinets:

1. NEMA 250, [**Type 1**] [**Type 3R**] [**Type 12**] galvanized-steel box with removable interior panel and removable front, finished inside and out with manufacturer's standard enamel.
2. Hinged door in front cover with flush latch and concealed hinge.
3. Key latch to match panelboards.
4. Metal barriers to separate wiring of different systems and voltage.
5. Accessory feet where required for freestanding equipment.
6. Nonmetallic cabinets shall be listed and labeled as defined in NFPA 70, by a qualified testing agency, and marked for intended location and application.

Q. CORROSION RESISTANT BOXES

1. Plastic Coated Outlet and Junction Boxes: Threaded type malleable iron boxes coated with 40 mils thick polyvinylchloride coating.
2. Non-Metallic Junction and Pullboxes: Glass fiber reinforced polyester.

2.7 HANDHOLES AND BOXES FOR EXTERIOR UNDERGROUND WIRING

A. General Requirements for Handholes and Boxes:

1. Boxes and handholes for use in underground systems shall be designed and identified as defined in NFPA 70, for intended location and application.
2. Boxes installed in wet areas shall be listed and labeled as defined in NFPA 70, by a qualified testing agency, and marked for intended location and application.

B. Polymer-Concrete Handholes and Boxes with Polymer-Concrete Cover: Molded of sand and aggregate, bound together with polymer resin, and reinforced with steel, fiberglass, or a combination of the two.

1. Manufacturers: Subject to compliance with requirements, available manufacturers offering products that may be incorporated into the Work include, but are not limited to the following:

a. Armorcast Products Company.
b. Oldcastle Enclosure Solutions.
c. Quazite; Hubbell Incorporated, Power Systems.
d. Or equal.

2. Standard: Comply with SCTE 77.

3. Configuration: Designed for flush burial with [**open**] [**closed**] [**integral closed**] bottom unless otherwise indicated.
4. Cover: Weatherproof, secured by tamper-resistant locking devices and having structural load rating consistent with enclosure and handhole location.
5. Cover Finish: Nonskid finish shall have a minimum coefficient of friction of 0.50.
6. Cover Legend: Molded lettering, [**"ELECTRIC."**] .
7. Conduit Entrance Provisions: Conduit-terminating fittings shall mate with entering ducts for secure, fixed installation in enclosure wall.
8. Handholes [**12 Inches Wide by 24 Inches Long (300 mm Wide by 600 mm Long)**] <**Insert dimensions**> and Larger: Have inserts for cable racks and pulling-in irons installed before concrete is poured.

2.8 SOURCE QUALITY CONTROL FOR UNDERGROUND ENCLOSURES

A. Handhole and Pull-Box Prototype Test: Test prototypes of handholes and boxes for compliance with SCTE 77. Strength tests shall be for specified tier ratings of products supplied.

1. Tests of materials shall be performed by an independent testing agency.
2. Strength tests of complete boxes and covers shall be by either an independent testing agency or manufacturer. A qualified registered professional engineer shall certify tests by manufacturer.
3. Testing machine pressure gages shall have current calibration certification complying with ISO 9000 and ISO 10012 and traceable to NIST standards.

2.9 NAMEPLATES AND TAGS

A. General: Precision engraved letters and numbers with uniform margins, character size minimum 3/16 inch high.

1. Phenolic: Two color laminated engraver's stock, 1/16 inch minimum thickness, machine engraved to expose inner core color (white).
2. Aluminum: Standard aluminum alloy plate stock, minimum .032 inches thick, engraved areas enamel filled or background enameled with natural aluminum engraved characters.
3. Materials for Outdoor Applications: As recommended by nameplate manufacturer to suit environmental conditions.

PART 3 - EXECUTION

3.1 RACEWAY APPLICATION

A. Outdoors: Apply raceway products as specified below unless otherwise indicated:

1. Exposed Conduit: [**GRC**] [**RNC, Type EPC-40-PVC**] [**RNC, Type EPC-80-PVC**].
2. Concealed Conduit, Aboveground: [**GRC**] [**EMT**]
3. Underground Conduit: RNC, [**Type EPC-40-PVC**] [**Type EPC-80-PVC**], [**direct buried**] [**concrete encased**].
4. Connection to Vibrating Equipment (Including Transformers and Hydraulic, Pneumatic, Electric Solenoid, or Motor-Driven Equipment): [**LFMC**].
5. Boxes and Enclosures, Aboveground: NEMA 250, [**Type 3R**] [**Type 4**].

B. Indoors: Apply raceway products as specified below unless otherwise indicated:

1. Exposed, Not Subject to Physical Damage: [**EMT**].
2. Exposed, Not Subject to Severe Physical Damage: [**EMT**].
3. Exposed and Subject to Severe Physical Damage: [**GRC**]
   Raceway locations include the following:
   a. Corridors used for traffic of mechanized carts, forklifts, and pallet-handling units.

b. Mechanical rooms.

4. Concealed in Ceilings and Interior Walls and Partitions: [**EMT**]
5. Connection to Vibrating Equipment (Including Transformers and Hydraulic, Pneumatic, Electric Solenoid, or Motor-Driven Equipment): FMC, except use LFMC in damp or wet locations.
6. Damp or Wet Locations: [**GRC**].
7. Boxes and Enclosures: NEMA 250, Type 1, except use NEMA 250, Type 4 [**stainless steel**] in institutional and commercial kitchens and damp or wet locations.

C. Minimum Raceway Size: **[3/4-inch (21-mm)]** trade size.

D. Raceway Fittings: Compatible with raceways and suitable for use and location.

1. Rigid Steel Conduit: Use threaded rigid steel conduit fittings unless otherwise indicated. Comply with NEMA FB 2.10.
2. PVC Externally Coated, Rigid Steel Conduits: Use only fittings listed for use with this type of conduit. Patch and seal all joints, nicks, and scrapes in PVC coating after installing conduits and fittings. Use sealant recommended by fitting manufacturer and apply in thickness and number of coats recommended by manufacturer.
3. EMT: Use [**compression**], [**steel**] fittings. Comply with NEMA FB 2.10.
4. Flexible Conduit: Use only fittings listed for use with flexible conduit. Comply with NEMA FB 2.20.

E. Install nonferrous conduit or tubing for circuits operating above 60 Hz. Where aluminum raceways are installed for such circuits and pass through concrete, install in nonmetallic sleeve.

F. Do not install aluminum conduits, boxes, or fittings in contact with concrete or earth.

G. Install surface raceways only where indicated on Drawings.

H. Do not install nonmetallic conduit where ambient temperature exceeds [**120 deg F (49 deg C)**].

3.2 INSTALLATION

A. Comply with requirements in Section 260529 "Hangers and Supports for Electrical Systems" for hangers and supports.

B. Comply with NECA 1 and NECA 101 for installation requirements except where requirements on Drawings or in this article are stricter. Comply with NECA 102 for aluminum conduits. Comply with NFPA 70 limitations for types of raceways allowed in specific occupancies and number of floors.

C. Do not install raceways or electrical items on any "explosion-relief" walls or rotating equipment.

D. Do not fasten conduits onto the bottom side of a metal deck roof.

E. Keep raceways at least 6 inches (150 mm) away from parallel runs of flues and steam or hot-water pipes. Install horizontal raceway runs above water and steam piping.

F. Complete raceway installation before starting conductor installation.

G. Arrange stub-ups so curved portions of bends are not visible above finished slab.

H. Install no more than the equivalent of three 90-degree bends in any conduit run except for control wiring conduits, for which fewer bends are allowed. Support within 12 inches (300 mm) of changes in direction.

I. Make bends in raceway using large-radius preformed ells. Field bending shall be according to NFPA 70 minimum radii requirements. Use only equipment specifically designed for material and size involved.

J. Conceal conduit within finished walls, ceilings, and floors unless otherwise indicated. Install conduits parallel or perpendicular to building lines.

K. Support conduit within 12 inches (300 mm) of enclosures to which attached.

L. Raceways Embedded in Slabs:

1. Run conduit larger than 1-inch (27-mm) trade size, parallel or at right angles to main reinforcement. Where at right angles to reinforcement, place conduit close to slab support. Secure raceways to reinforcement at maximum 10-foot (3-m) intervals.
2. Arrange raceways to cross building expansion joints at right angles with expansion fittings.
3. Arrange raceways to keep a minimum of [**1 inch (25 mm)**] [**2 inches (50 mm)**] of concrete cover in all directions.
4. Do not embed threadless fittings in concrete unless specifically approved by Architect for each specific location.
5. Change from ENT to [**RNC, Type EPC-40-PVC,**] [**GRC**] before rising above floor.
6. Contractor shall not cut any hole larger than 6 inches except where otherwise directed in the Contract. Where the opening single or combined is larger than 6 inches, the Contractor shall request approval before execution of work.

M. Stub-Ups to Above Recessed Ceilings:

1. Use EMT, or RMC for raceways.
2. Use a conduit bushing or insulated fitting to terminate stub-ups not terminated in hubs or in an enclosure.

N. Threaded Conduit Joints, Exposed to Wet, Damp, Corrosive, or Outdoor Conditions: Apply listed compound to threads of raceway and fittings before making up joints. Follow compound manufacturer's written instructions.

O. Coat field-cut threads on PVC-coated raceway with a corrosion-preventing conductive compound prior to assembly.

P. Raceway Terminations at Locations Subject to Moisture or Vibration: Use insulating bushings to protect conductors including conductors smaller than No. 4 AWG.

Q. Terminate threaded conduits into threaded hubs or with locknuts on inside and outside of boxes or cabinets. Install bushings on conduits up to 1-1/4-inch (35mm) trade size and insulated throat metal bushings on 1-1/2-inch (41-mm) trade size and larger conduits terminated with locknuts. Install insulated throat metal grounding bushings on service conduits.

R. Install raceways square to the enclosure and terminate at enclosures with locknuts. Install locknuts hand tight plus 1/4 turn more.

S. Do not rely on locknuts to penetrate nonconductive coatings on enclosures. Remove coatings in the locknut area prior to assembling conduit to enclosure to assure a continuous ground path.

T. Cut conduit perpendicular to the length. For conduits 2-inch (53-mm) trade size and larger, use roll cutter or a guide to make cut straight and perpendicular to the length.

U. Install pull wires in empty raceways. Use polypropylene or monofilament plastic line with not less than 200-lb (90-kg) tensile strength. Leave at least 12 inches (300 mm) of slack at each end of pull wire. Cap underground raceways designated as spare above grade alongside raceways in use.

V. Surface Raceways:

1. Install surface raceway with a minimum 2-inch (50-mm) radius control at bend points.
2. Secure surface raceway with screws or other anchor-type devices at intervals not exceeding 48 inches (1200 mm) and with no less than two supports per straight raceway section. Support surface raceway according to manufacturer's written instructions. Tape and glue are not acceptable support methods.

W. Install raceway sealing fittings at accessible locations according to NFPA 70 and fill them with listed sealing compound. For concealed raceways, install each fitting in a flush steel box with a blank cover plate having a finish similar to that of adjacent plates or surfaces. Install raceway sealing fittings according to NFPA 70.

X. Install devices to seal raceway interiors at accessible locations. Locate seals so no fittings or boxes are between the seal and the following changes of environments. Seal the interior of all raceways at the following points:

1. Where conduits pass from warm to cold locations, such as boundaries of refrigerated spaces.
2. Where an underground service raceway enters a building or structure.
3. Conduit extending from interior to exterior of building.
4. Conduit extending into pressurized duct and equipment.
5. Conduit extending into pressurized zones that are automatically controlled to maintain different pressure set points.
6. Where otherwise required by NFPA 70.

Y. Comply with manufacturer's written instructions for solvent welding RNC and fittings.

Z. Expansion-Joint Fittings:

1. Install in each run of aboveground RNC that is located where environmental temperature change may exceed 30 deg F (17 deg C) and that has straight-run length that exceeds 25 feet (7.6 m). Install in each run of aboveground RMC[**and EMT**] conduit that is located where environmental temperature change may exceed 100 deg F (55 deg C) and that has straight-run length that exceeds 100 feet (30 m).
2. Install type and quantity of fittings that accommodate temperature change listed for each of the following locations:

   a. Outdoor Locations Not Exposed to Direct Sunlight: [**125 deg F (70 deg C)**] temperature change.
   b. Outdoor Locations Exposed to Direct Sunlight: [**155 deg F (86 deg C)**] temperature change.
   c. Indoor Spaces Connected with Outdoors without Physical Separation: [**125 deg F (70 deg C)**] temperature change.
   d. Attics: [**135 deg F (75 deg C)**] temperature change.

3. Install fitting(s) that provide expansion and contraction for at least 0.00041 inch per foot of length of straight run per deg F (0.06 mm per meter of length of straight run per deg C) of temperature change for PVC conduits. Install fitting(s) that provide expansion and contraction for at least 0.000078 inch per foot of length of straight run per deg F (0.0115 mm per meter of length of straight run per deg C) of temperature change for metal conduits.
4. Install expansion fittings at all locations where conduits cross building or structure expansion joints.
5. Install each expansion-joint fitting with position, mounting, and piston setting selected according to manufacturer's written instructions for conditions at specific location at time of installation. Install conduit supports to allow for expansion movement.

AA. Flexible Conduit Connections: Comply with NEMA RV 3. Use a maximum of [**72 inches (1830 mm)**] of flexible conduit for [**recessed and semirecessed luminaires,**]equipment subject to vibration, noise transmission, or movement; and for transformers and motors.

1. Use LFMC in damp or wet locations subject to severe physical damage.
2. Use LFMC in damp or wet locations not subject to severe physical damage.

BB. Mount boxes at heights indicated on Drawings. If mounting heights of boxes are not individually indicated, give priority to ADA requirements. Install boxes with height measured to [**center**] of box unless otherwise indicated.

CC. Recessed Boxes in Masonry Walls: Saw-cut opening for box in center of cell of masonry block and install box flush with surface of wall. Prepare block surfaces to provide a flat surface for a raintight connection between box and cover plate or supported equipment and box.

DD. Horizontally separate boxes mounted on opposite sides of walls so they are not in the same vertical channel.

EE. Locate boxes so that cover or plate will not span different building finishes.

FF. Support boxes of three gangs or more from more than one side by spanning two framing members or mounting on brackets specifically designed for the purpose.

GG. Fasten junction and pull boxes to or support from building structure. Do not support boxes by conduits.

HH. Set metal floor boxes level and flush with finished floor surface.

II. Set nonmetallic floor boxes level. Trim after installation to fit flush with finished floor surface.

JJ. Number of Raceways: Do not change number of raceways to less than the number indicated on the drawings.

1. Each raceway shall enclose one circuit unless otherwise indicated on the drawings.

KK. Number of Raceways: Do not change number of raceways to less than the number indicated on the drawings except when appropriate for advantageous reuse of existing exposed and concealed raceways (The contract documents do not indicate location, number, size or condition of existing raceways). Existing raceways may be reused if the following conditions are met:

1. The existing raceway must be of adequate size for the new conductors to be installed therein (NFPA 70 Chapter 9, Tables 1, 4, & 5; Appendix C, Tables C1-C12a). More circuits may be enclosed by existing raceways than the circuiting shown on the drawings provided conductor sizes are increased to compensate for derating (adjustment factors) and other considerations required by NFPA 70 Article 310-15.
2. Remove existing conductors.
3. Demonstrate to the Director's Representative that the existing raceway is clear of obstructions and in good condition.
4. Check ground continuity. When ground continuity of existing raceway is inadequate install insulated grounding bushings, grounding wedges, bonding straps, grounding jumpers or equipment grounding conductors to establish effective path to ground.
5. Install insulated bushings to replace damaged or missing bushings. Replace non-insulated bushings with insulated bushings on raceway sizes 1 inch and larger.
6. Install vertical conductor supports to replace existing or missing vertical conductor supports.
7. Install extension rings on existing boxes when the number of new conductors installed therein exceeds NFPA 70 requirements.
8. Furnish the Director's Representative with marked up drawings showing size and routing of existing raceways with number and size of new conductors installed therein. The drawings will be forwarded to the design Director's Representative for verification of NFPA 70 compliance.
9. Furnish the Director's Representative with marked up drawings showing size and routing of existing raceways with number and size of new conductors installed therein. The drawings will be forwarded to the design Director's Representative engineer for verification of NFPA 70 compliance.

Lighting Fixtures	6'-0"
Lighting Fixtures in Stairway	7'-6"
Exit Lights	8'-0" where ceiling height allows a minimum of 6 inch clearance between ceiling and top of exit light. Otherwise mount exit light so that it's top is 6 inches below finished ceiling. Adjust height and clearances as required to suit installation over doors.
Hose Cabinet Lights	1'-0" above top of cabinet
Switches	4'-0"
Single & Duplex Receptacles	1'-6"*
Water Cooler Receptacles	2'-0"
Special Purpose Receptacles	4'-0"
Thermostats	5'-0"
Manual Fire Alarm Boxes	4'-0"
Audible Notification Appliances	8'-0" where ceiling height allows a minimum of 6 inch clearance between ceiling and top of appliance. Otherwise mount appliance so that it's top is 6 inches below finished ceiling.

Visible Notification Appliances	Install outlet so that the bottom of the visible lens will be 6’-8” AFF.
Combination Audible/Visible Notification Appliances	Install outlet so that the bottom of the visual lens will be 6’-8” AFF, and the audible section will be above the visible section.
Radio	2’-0”
Television	2’-0”
Telecommunications	2’-0”
Telephone	2’-0”
Telephone Marked W.T.	Install outlet so that the highest operable part of the wall mounted telephone will not be more than 4’-0” AFF.

LL. Raceway Schedule:

1. Rigid Ferrous Metal Conduit: Install in all locations unless otherwise specified or indicated on the drawings.
2. Intermediate Ferrous Metal Conduit: May be installed in all dry and damp locations except:

   a. Hazardous areas.
   b. Where other type raceways are specified or indicated on the drawings.

3. Electrical Metallic Tubing:

   a. May be installed concealed as branch circuit conduits above suspended ceilings where conduit does not support fixtures or other equipment.
   b. May be installed concealed as branch circuit conduits in hollow areas in dry locations, including:

      1) Hollow concrete masonry units, except where cores are to be filled.
      2) Drywall construction with sheet metal studs, except where studs are less than 3-1/2 inches deep.

   c. May be installed exposed as branch circuit conduits in dry non-hazardous locations at elevations over 10’-0” above finished floor where conduit does not support fixtures or other equipment.

4. Flexible Metal Conduit: Install equipment grounding conductor in the flexible metal conduit and bond at each box or equipment to which conduit is connected:

   a. Use for final conduit connection to recessed lighting fixtures in suspended ceilings. Use 4 to 6 feet of flexible metal conduit (minimum size 1/2 inch) between junction box and fixture. Locate junction box at least 1 foot from fixture and accessible if the fixture is removed.
   b. Use 1 to 3 feet of flexible metal conduit for final conduit connection to:

      1) Emergency lighting units.
      2) Dry type transformers.
      3) Motors with open, drip-proof or splash-proof housings.
      4) Equipment subject to vibration (dry locations).
      5) Equipment requiring flexible connection for adjustment or alignment (dry locations).

   c. Use for concealed branch circuit conduits above existing non-removable suspended ceilings where rigid type raceways cannot be installed due to inaccessibility of space above ceiling.
   d. May be installed concealed as branch circuit conduits in drywall construction with sheet metal studs, except where studs are less than 3-1/2 inches deep.

5. Liquid-tight Flexible Metal Conduit: Install equipment grounding conductor in liquid-tight flexible metal conduit and bond at each box or equipment to which conduit is connected:

   a. Use 1 to 3 feet of liquid-tight flexible metal conduit (UL listed and marked suitable for the installation’s temperature and environmental conditions) for final conduit connection to:

      1) Motors with weather-protected or totally enclosed housings.

2) Equipment subject to vibration (damp and wet locations).
3) Equipment requiring flexible connection for adjustment or alignment (damp and wet locations).

6. Surface Metal Raceway: Use as exposed raceway system in finished spaces at locations indicated on the drawings.

a. Use surface metal raceway system of size required for number of wires to be installed therein. (Use specific size when indicated on the drawings).
b. Do not run raceway through walls that have a plaster finish nor through masonry walls or floors. Install a pipe sleeve, or a short length of conduit with junction boxes or adapter fittings for raceway runs through such areas. Run raceway along top of baseboards, care being taken to avoid telephone and other signal wiring. Where raceway crosses chair railing or picture molding, cut the chair railing or picture molding to permit the raceway to lie flat against the wall. Run raceway around door frames and other openings. Run raceway on ceiling or walls perpendicular to or parallel with walls and floors.
c. Secure one piece raceway every 30 inches alternately with 2 hole straps, and support clips (2 hole strap, support clip, 2 hole strap, etc.). Secure 2 piece raceway every 30 inches alternately with 2 hole straps and fasteners through back of raceway (2 hole strap, fastener through back, 2 hole strap, etc.).
d. Secure raceway at intervals not exceeding 36 inches.
e. Install separate equipment grounding conductor for grounding of equipment. The raceway alone will not be considered suitable for use as an effective path to ground.
f. Outlet box covers for pendant mounted fluorescent fixtures may be omitted if the fixture canopy is notched to receive the raceway and the canopy fits snugly against the ceiling.
g. Where equipment is mounted on an outlet box and the equipment base is larger than the outlet box, provide finishing collar around equipment base and outlet box or provide finishing collar/outlet box:

1) Finishing Collar: Same finish and peripheral dimensions as the equipment base, including provisions for mounting, slots to fit over raceway and of depth to cover outlet box and extend back to ceiling or wall.
2) Combination Finishing Collar/Outlet Box: Same finish and peripheral dimensions as the equipment base to be mounted thereon, gage or thickness of metal as required by National Electrical Code, including provision for mounting and knockouts for entrance of raceway.

7. Wireways: May be used indoors in dry locations for exposed raceway between grouped, wall mounted equipment.

MM. Box Schedule for Concealed Conduit System:

1. Non-Fire Rated Construction:

a. Depth: To suit job conditions and comply with NFPA 70 Article 370.
b. For Lighting Fixtures: Use galvanized steel outlet boxes designed for the purpose.

1) For Fixtures Weighing 50 lbs. or Less: Box marked “FOR FIXTURE SUPPORT”.
2) For Fixtures More Than 50 lbs: Box listed and marked with the weight of the fixture to be supported (or support fixture independent of the box).

c. For Ceiling Suspended Fans:

1) For Fans Weighing 35 lbs or Less: Marked “Acceptable for Fan Support.”
2) For Fans Weighing More Than 35 lbs, up to 70 lbs: Marked “Acceptable for Fan Support up to 70 lbs (or support fan independent of the box).”

d. For Junction and Pull Boxes: Use galvanized steel boxes with flush covers.
e. For Switches, Receptacles, Etc:

1) Plaster or Cast-In-Place Concrete Walls: Use 4 inch or 4-11/16 inch galvanized steel boxes with device covers.
2) Walls Other Than Plaster or Cast-In-Place Concrete: Use type of galvanized steel box which will allow wall plate to cover the opening made for the installation of the box.

2. Recessed Boxes in Fire Rated (2 hour maximum) Bearing and Nonbearing Wood or Steel Stud Walls (Gypsum Wallboard Facings):

    a. Use listed single and double gang metallic outlet and switch boxes. The surface area of individual outlet or switch boxes shall not exceed 16 square inches.
    b. The aggregate surface area of the boxes shall not exceed 100 square inches per 100 square feet of wall surface.
    c. Securely fasten boxes to the studs. Verify that the opening in the wallboard facing is cut so that the clearance between the box and the wallboard does not exceed 1/8 inch.
    d. Separate boxes located on opposite sides of walls or partitions by a minimum horizontal distance of 24 inches. This minimum separation distance may be reduced when wall opening protective materials are installed according to the requirements of their classification.
    e. Use wall opening protective material in conjunction with boxes installed on opposite sides of walls or partitions of staggered stud construction in accordance with the classification requirements for the protective material.

3. Other Fire Rated Construction: Use materials and methods to comply with the listing requirements for the classified construction. Conduits Penetrating Concrete Floor Slabs (Concrete slabs that are both ceilings and floors shall be treated as floor slabs):

    a. Provide a minimum of 2 inches between conduits that vertically penetrate elevated concrete slabs.

NN. Conduit Installed Exposed:

1. Install conduit exposed where indicated on the drawings. If not indicated, conduit may be installed exposed, as approved, in:

    a. Unfinished spaces, and finished spaces housing mechanical or electrical equipment that is generally accessible only to facility maintenance personnel.
    b. Areas where existing conduits have been installed exposed.
    c. Areas where conduit cannot be installed concealed.

2. Install conduit tight to the surface of the building construction. Exception:

    a. Where otherwise indicated or directed.

3. Install vertical runs perpendicular to the floor.
4. Install runs on the ceiling perpendicular or parallel to the walls.
5. Install horizontal runs parallel to the floor.
6. Do not run conduits near heating pipes.
7. Installation of conduit directly on the floor will not be permitted.

OO. Box Schedule for Exposed Conduit System:

1. Dry and Damp Locations: Use zinc electroplate or hot dipped galvanized threaded type malleable iron or cast iron alloy outlet, junction, and pullboxes or conduit bodies provided with a volume marking in conjunction with ferrous raceways unless otherwise specified or indicated on the drawings.

    a. Galvanized steel boxes may be used in conjunction with conduit sizes over 1 inch in non-hazardous dry and damp locations.
    b. Galvanized steel boxes may be used in conjunction with electrical metallic tubing where it is allowed (specified) to be installed exposed as branch circuit conduits at elevations over 10’-0” above finished floor.

2. Wet Locations: Use threaded type malleable iron or cast iron alloy outlet junction, and pullboxes or conduit bodies (provided with a volume marking) with hot dipped galvanized or other specified corrosion resistant coating in conjunction with ferrous raceways unless otherwise specified or indicated on the drawings.

a. Use corrosion resistant boxes in conjunction with plastic coated rigid ferrous metal conduit.

3. Finishing Collar or Combination Finishing Collar/Outlet Box (Surface Mounted Equipment Used with Exposed Raceway):

a. Use finishing collar where surface mounted equipment is installed on an exposed raceway outlet box and the equipment base is larger than the outlet box.
b. Use combination finishing collar/outlet box where surface mounted equipment is not indicated to be installed on an exposed raceway outlet box, but raceway cannot be run directly into equipment body due to equipment design.

3.3 INSTALLATION OF UNDERGROUND CONDUIT

A. Direct-Buried Conduit:

1. Excavate trench bottom to provide firm and uniform support for conduit. Prepare trench bottom as specified in Section 312000 "Earth Moving" for pipe less than 6 inches (150 mm) in nominal diameter.
2. Install backfill as specified in Section 312000 "Earth Moving."
3. After installing conduit, backfill and compact. Start at tie-in point, and work toward end of conduit run, leaving conduit at end of run free to move with expansion and contraction as temperature changes during this process. Firmly hand tamp backfill around conduit to provide maximum supporting strength. After placing controlled backfill to within 12 inches (300 mm) of finished grade, make final conduit connection at end of run and complete backfilling with normal compaction as specified in Section 312000 "Earth Moving."
4. Install manufactured duct elbows for stub-ups at poles and equipment and at building entrances through floor unless otherwise indicated. Encase elbows for stub-up ducts throughout length of elbow.
5. Install manufactured rigid steel conduit elbows for stub-ups at poles and equipment and at building entrances through floor.

a. Couple steel conduits to ducts with adapters designed for this purpose, and encase coupling with 3 inches (75 mm) of concrete for a minimum of 12 inches (300 mm) on each side of the coupling.
b. For stub-ups at equipment mounted on outdoor concrete bases and where conduits penetrate building foundations, extend steel conduit horizontally a minimum of 60 inches (1500 mm) from edge of foundation or equipment base. Install insulated grounding bushings on terminations at equipment.

6. Warning Planks: Bury warning planks approximately 12 inches (300 mm) above direct-buried conduits but a minimum of 6 inches (150 mm) below grade. Align planks along centerline of conduit.
7. Underground Warning Tape: Comply with requirements in Section 260553 "Identification for Electrical Systems."

3.4 INSTALLATION OF UNDERGROUND HANDHOLES AND BOXES

A. Install handholes and boxes level and plumb and with orientation and depth coordinated with connecting conduits to minimize bends and deflections required for proper entrances.

B. Unless otherwise indicated, support units on a level bed of crushed stone or gravel, graded from 1/2-inch (12.5-mm) sieve to No. 4 (4.75-mm) sieve and compacted to same density as adjacent undisturbed earth.

C. Elevation: In paved areas, set so cover surface will be flush with finished grade. Set covers of other enclosures 1 inch (25 mm) above finished grade.

D. Install handholes with bottom below frost line, <**Insert depth of frost line below grade at Project site**> below grade.

E. Install removable hardware, including pulling eyes, cable stanchions, cable arms, and insulators, as required for installation and support of cables and conductors and as indicated. Select arm lengths to be long enough to provide spare space for future cables but short enough to preserve adequate working clearances in enclosure.

F. Field-cut openings for conduits according to enclosure manufacturer's written instructions. Cut wall of enclosure with a tool designed for material to be cut. Size holes for terminating fittings to be used, and seal around penetrations after fittings are installed.

3.5 SLEEVE AND SLEEVE-SEAL INSTALLATION FOR ELECTRICAL PENETRATIONS

A. Install 0sleeves and sleeve seals at penetrations of exterior floor and wall assemblies. Comply with requirements in Section 260544 "Sleeves and Sleeve Seals for Electrical Raceways and Cabling."

3.6 FIRESTOPPING

A. Install firestopping at penetrations of fire-rated floor and wall assemblies. Comply with requirements in Section 078413 "Penetration Firestopping."

3.7 PROTECTION

A. Protect coatings, finishes, and cabinets from damage and deterioration.

1. Repair damage to galvanized finishes with zinc-rich paint recommended by manufacturer.
2. Repair damage to PVC coatings or paint finishes with matching touchup coating recommended by manufacturer.

END OF SECTION 260533

SECTION 260539 - UNDERFLOOR RACEWAYS FOR ELECTRICAL SYSTEMS

PART 1 - GENERAL

1.1 RELATED DOCUMENTS

A. Drawings and general provisions of the Contract, including General and Supplementary Conditions and Division 01 Specification Sections, apply to this Section.

1.2 SUMMARY

A. Section Includes:
1. Flush, flat-top underfloor raceways.
2. Trench-type underfloor raceways.
3. Supports, raceway fittings, and hardware.
4. Junction boxes.
5. Service fittings.

1.3 DEFINITIONS

A. Activation: Nomenclature used by some manufacturers for a service fitting.

1.4 SUBMITTALS

A. Submittals for this section are subject to the re-evaluation fee identified in Article 4 of the General Conditions.

B. Manufacturer's installation instructions shall be provided along with product data.

C. Submittals shall be provided in the order in which they are specified and tabbed (for combined submittals).

D. Product Data: For each type of product.

1. Include finishes, construction details, material descriptions, dimensions, and profiles for underfloor raceway components, fittings, and accessories.
2. Include rated capacities, operating characteristics, electrical characteristics, and furnished specialties and accessories.

E. Submit an Environmental Product Declaration (EPD) from the manufacturer for steel raceways within this specification section, if available. A statement of the contractor's good faith effort to obtain the EPD shall be provided if not available.

1. Manufacturer-provided EPDs must be Product Specific Type III (Third-Party Reviewed), in adherence with ISO 14025 *Environmental labels and declarations*, ISO 14044

Environmental management – Life cycle assessment, and ISO 21930 *Core rules for environmental product declarations of construction products and services.*

F. Shop Drawings: For underfloor raceways.

1. Include floor plans, elevations, sections, and details.
2. Detail fabrication and assembly of underfloor raceways.

   a. Identify components and accessories, such as expansion-joint assemblies, straight raceway lengths, preset and afterset inserts, and service fittings.
   b. Detail preparation and installation methods and instructions.
   c. Provide dimensions locating raceway header and distribution elements. Include spacing between preset inserts and between preset inserts and ends of duct runs, walls, columns, junction boxes, and header duct connections.
   d. Provide raceway fill charts for each duct size provided for each conductor size the duct is identified to accept. Provide separate charts for power and communication conductors and cables.
   e. Show connections between raceway elements and relationships between components and adjacent structural and architectural elements, including slab reinforcement, floor finish work, permanent partitions, expansion joints[**, architectural module lines**][**, and pretensioning or post-tensioning components**].
   f. Indicate height of preset inserts, junction boxes, and raceways coordinated with depth of concrete slab and floor fill.
   g. Indicate thickening of slabs where required for adequate encasement of raceway components.
   h. Document coordination of exposed components with floor-covering materials to ensure that fittings and trim are suitable for indicated floor-covering material.
   i. Revise locations from those indicated in the Contract Documents, as required to suit field conditions and to ensure a functioning layout. Identify proposed deviations from the Contract Documents.
   j. Show details of connections and terminations of underfloor raceways at panelboards and communication terminal equipment in equipment rooms, wire closets, and similar spaces.
   k. Identify those cells of cellular floor deck that are to be connected and fitted for the following underfloor distribution:

      1) Power.
      2) Voice.
      3) Data.
      4) Signal.
      5) Communications.

G. Samples: For each underfloor raceway product, in specified finish, including the following:

1. Service fittings and flush and recessed outlet and junction-box covers.
2. A section of each service raceway configuration, with specified preset insert and service fitting installed.
3. A junction box of each size and type for use with underfloor raceway.

4. A section of each header raceway configuration, complete with provisions for connection with service raceway.
5. A section of trench-type raceway, complete with cover and required trim.
6. A junction box of each size and type for use with trench-type raceway, complete with cover and trim.

H. Submittals for this section are subject to the re-evaluation fee identified in Article 4 of the General Conditions.

I. Field quality-control reports.

1.5 CLOSEOUT SUBMITTALS

A. Operation and Maintenance Data: For underfloor raceways, to include in emergency, operation, and maintenance manuals.

1. In addition to items specified in Section 017823 "Operation and Maintenance Data," include the following:
2. Manufacturer's written instructions for locating preset inserts and for installing afterset inserts.

B. Project Record Documents: Submit final as-built Drawings, indicating dimensioned locations for all ducts, junction boxes, and preset inserts. Typical spacing designation shall be accepted only for preset insert spacing along a continuous length of duct.

1.6 MAINTENANCE MATERIAL SUBMITTALS

A. Furnish extra materials that match products installed and that are packaged with protective covering for storage and identified with labels describing contents.

1. Afterset Inserts: Furnish quantity equal to [**10**] <**Insert number**> percent of service fittings installed, but no fewer than <**Insert number**> units.
2. Afterset Inserts: Furnish quantity equal to [**5**] <**Insert number**> percent of each type of preset insert installed, but no fewer than <**Insert number**> units.
3. Service Fittings: Furnish [**three**] <**Insert number**> of each type of service fitting indicated for each 100 feet (30 m) of distribution raceway or active-floor-cell length.
4. Outlet Blanking Covers: Furnish quantity equal to [**10**] <**Insert number**> percent of each type of floor opening installed for outlets, but no fewer than <**Insert number**> units.

B. Furnish [**one**] <**Insert number**> electronic instrument(s) and other tools, as recommended by underfloor raceway manufacturer for detecting, locating, and uncovering preset inserts in metal raceway under floor covering and up to 3/8 inch (10 mm) of concrete fill.

C. Furnish [**one**] <**Insert number**> set(s) of tools needed for installing afterset inserts in underfloor service raceway, including the following:

1. Electric Drill: Variable speed, 1/2-inch (13-mm) capacity.
2. Hole Saw: Diamond bit, for dry concrete, [**2-inch (50-mm)**] size.

1.7 QUALITY ASSURANCE

A. Testing Agency Qualifications: Member company of NETA or an NRTL.

1. Testing Agency's Field Supervisor: Currently certified by NETA to supervise on-site testing.

B. Comply with UL 884.

C. Comply with NFPA 70.

D. Mockup: Install a mockup for evaluation of surface preparation and duct installation techniques and workmanship.

1. Mockup area shall be designated by Architect.
2. Do not proceed with remaining work until workmanship, appearance, and performance are approved.
3. Repair or reinstall mockup area as required to produce acceptable work.
4. Approval of mockups does not constitute approval of deviations from the Contract Documents contained in mockups unless Architect specifically approves such deviations in writing.
5. Subject to compliance with requirements, approved mockups may become part of the completed Work if undisturbed at time of Substantial Completion.

PART 2 - PRODUCTS

2.1 SYSTEM DESCRIPTION

A. Electrical Components, Devices, and Accessories: Listed and labeled as defined in NFPA 70, by a qualified testing agency, and marked for intended location and application.

B. Jacks, Receptacles, and Fittings:

1. Comply with Section 262726 "Wiring Devices" for power outlets, faceplates, and connectors.
2. Comply with Section 271513 "Communications Copper Horizontal Cabling" for twisted pair jacks, outlets, assemblies, and faceplates.
3. Comply with Section 271523 "Communications Optical Fiber Horizontal Cabling" for optical fiber jacks, outlets, assemblies, and faceplates.
4. Comply with Section 271533 "Communications Coaxial Horizontal Cabling" for coaxial jacks, outlets, assemblies, and faceplates.

2.2 FLUSH, FLAT-TOP UNDERFLOOR RACEWAYS

A. Description: [**Single**] [**or**] [**multichannel**] underfloor raceways installed on floor slab with top of raceway flush with concrete topping added hereafter, and then covered with finish material.

B. Manufacturers: Subject to compliance with requirements, available manufacturers offering products that may be incorporated into the Work include, but are not limited to the following:

1. MonoSystems, Inc.
2. Schneider Electric USA (Square D).
3. Walker Systems, Inc.
4. Or equal.

C. Source Limitations: Obtain underfloor raceway components for each system through single source from single manufacturer.

D. Description:

1. Material: Steel.
2. Cross-Section Shape: Rectangular, [**single channel**] [**and**] [**multichannel, separated by steel wall(s)**].
3. Listed and labeled for installation with top flush with concrete floor.
4. Number of Levels: One.

E. Service Raceways: Fitted with preset inserts.

1. Number of Longitudinal Channels per Multichannel Raceway: [**Two**] [**Three**].
2. Number of Single-Channel Raceways per Run: [**One**] [**Two**] [**Three**] unless otherwise indicated.
3. Nominal Channel Dimensions: 3 inches (75 mm) wide by 1-1/4 inches (31 mm) deep.
4. Preset Inserts: Threaded opening with removable steel plug that is flush with top of raceway when screwed in place.

    a. Spacing: [**12 inches (300 mm)**] [**24 inches (600 mm)**] o.c., full length of each service raceway.
    b. Arrangement: Stagger insert locations on parallel raceways or channels to accommodate placement of adjacent service fittings.
    c. Size: 1-5/8-inch (41-mm) diameter.

F. Trench Duct Crossunder: Fitting attached to underside of trench duct.

1. Nominal Channel Dimensions: Same as service raceways.
2. Arrangement: Offset by depth of trench duct.
3. Connections: Arranged to connect trench duct to flush duct through factory-cut, grommeted openings.

G. Header Raceways: Raceways same as service raceways, except without preset inserts (blank raceway).

1. Nominal Channel Dimensions: Same as service raceways.
2. Arrangement: In same plane as service raceways.
3. Connections: Arranged to connect with service raceways at junction boxes.

2.3 TRENCH-TYPE UNDERFLOOR RACEWAYS

A. Description: Trench-type raceways used as header or feeder raceways to serve service raceways.

B. Manufacturers: Subject to compliance with requirements, available manufacturers offering products that may be incorporated into the Work include, but are not limited to the following:

1. HH Robertson.
2. Schneider Electric USA (Square D).
3. Walker Systems, Inc.
4. Or equal.

C. Source Limitations: Obtain underfloor raceway components for each system through single source from single manufacturer.

D. Trench: Steel, shop or factory welded and fabricated to indicated sizes. Include the following features:

1. Slab Depth Adjustment: Minimum of minus 1/8 inch (3 mm) to plus 5/8 inch (17 mm) before and during concrete placement.
2. Cover Supports: Height adjustable, with leveling screws to rigidly support cover assembly.
3. Screed Strip: Extruded aluminum along both edges at proper elevation without requiring shim material.
4. Trim Strip: Select to accommodate floor finish material.
5. Partitions: Arranged to separate channels and isolate wiring of different systems.
6. Grommeted openings in active floor cells or service raceways.
7. Manufacturer's standard corrosion-resistant finish, applied after fabrication.

E. Cover Plates: Removable, steel plates, 1/4 inch (6 mm) thick, each weighing 60 lb (27 kg) or less with full gasket attached to side units. Fabricate intermediate supports to limit unsupported spans to [**15 inches (375 mm)**] or less. Fabricate covers with appropriate depth recess to receive indicated floor finish.

2.4 SUPPORTS, RACEWAY FITTINGS, AND HARDWARE

A. Source Limitations: Obtain underfloor raceway supports, fittings, and hardware components for each system through single source from single manufacturer.

B. Supports, fittings, and hardware shall be compatible with raceway and outlet system and shall be listed for use with raceway systems and components delivered.

C. Supports: Adjustable for height and arranged to maintain alignment and spacing of raceways during concrete placement. Include hold-down straps.

D. Raceway Fittings: Couplings, expansion-joint sleeves, cross-under offsets, vertical and horizontal elbows, grounding screws, adapters, end caps, and other fittings suitable for use with basic components to form a complete installation.

2.5 JUNCTION BOXES

A. Description: Raceway manufacturer's standard enclosure for indicated type, quantity, arrangement, and configuration of raceways at each raceway junction, intersection, and access location. Include the following accessories and features:

1. Mounting brackets.
2. Escutcheons and holders to accommodate surrounding floor covering.
3. Means for leveling and height adjustment more than 3/8 inch (10 mm) before and after concrete is placed.
4. Boxes shall withstand a minimum [**300-lb (136-kg)**] concentrated load. Internal supports shall be provided as needed to meet this requirement.
5. All boxes shall provide 2-inch- (**50**-mm-) minimum bend radius for data and communication cables.
6. Raceway Openings: For underfloor raceways and conduits arranged to accommodate raceway layout.
7. Covers shall have appropriate depth recess to receive specific floor finish material.
8. Partitions to separate wiring of different systems.

2.6 SERVICE FITTINGS/ACTIVATIONS

A. Source Limitations: Obtain underfloor raceway service fittings and hardware for each system through single source from single manufacturer.

B. Exposed Parts Finish: [**Brass**] [**Brushed aluminum**]

C. Flush, Single-System Service Fitting for Round Inserts: Include mounting and cover to support and provide access to single connector, jack, or receptacle device; mounted flush with floor within body of insert.

1. Connector, Jack, and Receptacle Devices: Single modular type.
2. Power Receptacle Outlet: Suitable for 20-A, 120-V device.

D. Flush, [**Single-**] [**or**] [**Multiple-**]System Service Fitting for Rectangular Inserts: Include mounting, hinged cover, and trim to support and provide access to connector, jack, or receptacle devices mounted flush with floor within insert.

1. Connector, Jack, and Receptacle Devices: Modular type.
2. Power Receptacle Rating: 20 A, 120 V unless otherwise indicated.
3. Recess-Mounted Service Fitting: Modular fittings compatible with preset inserts. Include device plates for indicated systems and provisions for receptacles, jacks, and connectors. Include hinged flush covers with recessed depth to match thickness of floor finish material. Provide for internally mounted receptacle- and communication-jack and connector assemblies.

    a. Duplex receptacle.
    b. Duplex data jacks.
    c. Double duplex receptacles.
    d. Duplex receptacle and duplex data jacks.

e. Fiber-optic cable connector.

E. Surface-Mounted Service Fitting: Modular pedestal type, with locking attachment matched to insert floor opening.

1. Power-outlet, double-faced, surface-mounted unit for duplex receptacle on both sides.
2. Power-outlet, single-faced, surface-mounted unit for duplex receptacle on one side.
3. Communication-outlet, double-faced, surface-mounted unit.

   a. Include bushed openings on both sides; 1-inch (25-mm) minimum diameter; insulated with nonconducting material.
   b. Include provisions for modular dual fiber-optic connector assembly on both sides.
   c. Include provisions for modular dual jack-connector assembly, rated for [**Category 5**] [**Category 5e**] [**Category 6**] on both sides.

4. Communication-outlet, single-faced, surface-mounted unit with bushed opening on one side; 1-inch (25-mm) minimum diameter; insulated with nonconducting material.
5. Combination surface-mounted unit for duplex receptacle on one side and with communication cable connection provision on opposite side.

   a. Communication Side: Include bushed opening; 1-inch (25-mm) minimum diameter; insulated with nonconducting material.
   b. Communication Side: Include provisions for modular dual fiber-optic connector assembly.
   c. Communication Side: Include provisions for modular dual jack-connector assembly, rated for [**Category 5**] [**Category 5e**] [**Category 6**].

6. Flush-Mounted Service Fittings: Modular fittings compatible with preset inserts and shall include covers, provisions for receptacles jacks and connector assemblies and wiring extensions to wall-mounted outlets, and associated device plates for indicated systems. Include flush covers, recessed to suit floor finish material.
7. Indicate types and locations of devices on Drawings.

   a. Duplex convenience receptacle.
   b. Duplex data outlets.
   c. Double duplex convenience receptacles.
   d. Duplex convenience receptacle and duplex data outlets.
   e. Double duplex data outlets.
   f. Duplex fiber-optic communication connector.
   g. Wiring-Extension Service Fittings: Arrangement of brackets and mountings to support and provide access to wiring or cabling of a cell, and to connect the cable or raceway that extends the system to an individual wall outlet. Provide for connection of [**RMC**] for power extensions, and [**ENT**] [**optical fiber/communication cable raceway**] for communication system extensions.

PART 3 - EXECUTION

3.1 EXAMINATION

A. Examine substrates, areas, and conditions, with Installer present, for compliance with requirements for installation tolerances and other conditions affecting performance of the Work.

B. Proceed with installation only after unsatisfactory conditions have been corrected.

3.2 INSTALLATION

A. Install raceways aligned and leveled and, unless otherwise indicated, parallel or perpendicular to floor supports.

B. Maintain arrangement of conductor services throughout the raceway system.

C. Install a concrete mud slab for support of cellular metal, flush duct, or trench duct raceway. Construct mud slab with wire mesh in the top 1 inch (25 mm) of concrete.

D. Install a vapor barrier between the cellular metal raceway and a substrate in contact with earth.

E. Arrange supports to attain proper elevation, alignment, and spacing of raceways. Fasten supports securely at ends and at intervals not to exceed 60 inches (1500 mm), to prevent movement during concrete pour.

F. Level raceway components with finished slab and make adjustments in raceway component elevation to accommodate indicated floor finishes.

G. Junction Boxes: Install tops level and flush with finished floor. Install blank closure plates or plugs to close unused junction-box openings. Grout boxes in place to prevent movement during construction. Place top covers in inverted position during construction to prevent damage to surface of cover. Reinstall covers in proper position prior to final acceptance of the Work.

H. Install preset inserts per manufacturer's instructions.

I. Adjust supports to maintain a 1/8- to 3/8-inch (3.0- to 10-mm) finished concrete cover over preset inserts.

J. Remove burrs, sharp edges, dents, and mechanical defects.

K. Cap or plug boxes, insert- and service-fitting openings, and open ends of raceways.

L. Install expansion fittings with suitable bonding jumper where raceways cross building expansion joints.

M. Bond underfloor raceway components to create a continuous bonding path.

N. Seal raceways, cells, junction boxes, and inserts to prevent water, concrete, or foreign matter from entering raceways before and during pouring slab or placing fill. Tape joints or seal with compound, as recommended in writing by underfloor raceway manufacturer.

O. Install a marker at the center of the last insert of each cell and channel of each straight run of metal underfloor service raceway to locate the insert and identify the system.

1. Install markers at last inserts on both sides of permanent walls and at first inserts adjacent to each junction box.
2. Install markers flush at screed line before pouring slab or placing fill. Extend marker with grommeted screw when floor covering is placed. Do not extend through carpet.
3. Use slotted-head screw to identify electrical power; use Phillips-head screw to identify conventional communications.
4. Use another distinctive screw head to identify third system, such as special-purpose wiring.

P. Protect underfloor raceway system from damage. Do not use the installed duct system as working platforms or walkways. Do not allow equipment or heavy traffic over duct during construction period, without first installing ramps over the duct. Ramps shall be designed so that imposed loads are not transferred to the duct. Components of the system that are damaged during construction shall be replaced.

Q. Afterset Inserts: Cut, hole saw, and drill slab and raceways to allow for installation at locations indicated on plans.

R. Install wiring from outlet insert toward junction boxes, then to termination at panel.

S. Splices: All splices and taps shall be made in junction boxes. No splices or taps shall be made in raceways or outlet inserts.

3.3 FIELD QUALITY CONTROL

A. Testing Agency: [Owner**'s Representative will engage**] [**Engage**] a qualified testing agency to perform tests and inspections.

B. Manufacturer's Field Service: Engage a Company Service Advisor factory-authorized service representative to test and inspect components, assemblies, and equipment installations, including connections.

C. Perform the following tests and inspections [**with the assistance of a** Company Service Advisor **factory-authorized service representative**]:

1. Perform visual inspection of interior of each [**junction box**] [**section of trench raceway**] to verify absence of dirt, dust, construction debris, and moisture. Replace damaged and malfunctioning components.
2. Prior to and after concrete pour, perform point-to-point tests of ground continuity and resistance of ground path between the most remote accessible fitting on each branch of each underfloor raceway system and the main electrical distribution grounding system.

a. Determine cause and perform correction of any point-to-point resistance value that exceeds 0.05 ohms.
b. Comply with NETA Acceptance Testing Specification about safety, suitability of test equipment, test instrument calibration, and test report and records.

D. Prepare test and inspection reports.

3.4 CLEANING

A. Clean and swab out underfloor raceways, inserts, and junction boxes after finish has been applied to floor slab, and remove foreign material, dirt, and moisture. Leave interiors clean and dry.

END OF SECTION 260539

SECTION 260543

UNDERGROUND DUCTS AND RACEWAYS FOR ELECTRICAL SYSTEMS

PART 1 - GENERAL

1.1 RELATED DOCUMENTS

A. Drawings and general provisions of the Contract, including General and Supplementary Conditions and Division 01 Specification Sections, apply to this Section.

1.2 SUMMARY

A. Section Includes:

1. Metal conduits and fittings, including GRC and PVC-coated steel conduit.
2. Rigid nonmetallic duct.
3. Flexible nonmetallic duct.
4. Duct accessories.
5. Precast concrete handholes.
6. Polymer concrete handholes and boxes with polymer concrete cover.
7. Fiberglass handholes and boxes with polymer concrete cover.
8. Fiberglass handholes and boxes.
9. High-density plastic boxes.
10. Precast manholes.
11. Cast-in-place manholes.
12. Utility structure accessories.

1.3 DEFINITIONS

A. Direct Buried: Duct or a duct bank that is buried in the ground, without any additional casing materials such as concrete.

B. Duct: A single duct or multiple ducts. Duct may be either installed singly or as component of a duct bank.

C. Duct Bank:

1. Two or more ducts installed in parallel, with or without additional casing materials.
2. Multiple duct banks.

D. GRC: Galvanized rigid (steel) conduit.

E. Trafficways: Locations where vehicular or pedestrian traffic is a normal course of events.

1.4 ACTION SUBMITTALS

A. Submittals for this section are subject to the re-evaluation fee identified in Article 4 of the General Conditions.

B. Manufacturer's installation instructions shall be provided along with product data.

C. Submittals shall be provided in the order in which they are specified and tabbed (for combined submittals).

D. Product Data: For each type of product.

1. Include duct-bank materials, including spacers and miscellaneous components.
2. Include duct, conduits, and their accessories, including elbows, end bells, bends, fittings, and solvent cement.
3. Include accessories for manholes, handholes, boxes[**, and other utility structures**].
4. Include underground-line warning tape.
5. Include warning planks.

E. Submit an Environmental Product Declaration (EPD) from the manufacturer for steel conduit and precast handholes and boxes within this specification section, if available. A statement of the contractor's good faith effort to obtain the EPD shall be provided if not available.

1. Manufacturer-provided EPDs must be Product Specific Type III (Third-Party Reviewed), in adherence with ISO 14025 *Environmental labels and declarations*, ISO 14044 *Environmental management – Life cycle assessment*, and ISO 21930 *Core rules for environmental product declarations of construction products and services.*

F. Shop Drawings:

1. Precast or Factory-Fabricated Underground Utility Structures:

a. Include plans, elevations, sections, details, attachments to other work, and accessories.
b. Include duct entry provisions, including locations and duct sizes.
c. Include reinforcement details.
d. Include frame and cover design and manhole chimneys.
e. Include [**ladder**] [**step**] details.
f. Include grounding details.
g. Include dimensioned locations of cable rack inserts, pulling-in and lifting irons, and sumps.
h. Include joint details.

2. Factory-Fabricated Handholes and Boxes Other Than Precast Concrete:

a. Include dimensioned plans, sections, and elevations, and fabrication and installation details.
b. Include duct entry provisions, including locations and duct sizes.
c. Include cover design.
d. Include grounding details.

e. Include dimensioned locations of cable rack inserts, and pulling-in and lifting irons.

G. Submittals for this section are subject to the re-evaluation fee identified in Article 4 of the General Conditions.

H. Coordination Drawings: For duct and duct bank. Show duct profiles and coordination with other utilities and underground structures.

1. Include plans and sections, drawn to scale, and show bends and locations of expansion fittings.
2. Drawings shall be signed and sealed by a qualified professional engineer.

I. Qualification Data: For professional engineer and testing agency responsible for testing nonconcrete handholes and boxes.

J. Product Certificates: For concrete and steel used in precast concrete [**manholes**] [**and**] [**handholes**], as required by ASTM C858.

K. Source quality-control reports.

L. Field quality-control reports.

1.5 MAINTENANCE MATERIALS SUBMITTALS

A. Furnish extra materials that match products installed and that are packaged with protective covering for storage and identified with labels describing contents.

B. Furnish cable-support stanchions, arms, [**insulators,**] and associated fasteners in quantities equal to [**5**] percent of quantity of each item installed.

1.6 QUALITY ASSURANCE

A. Testing Agency Qualifications: Qualified according to ASTM E329 for testing indicated.

B. Qualifications of Supervisor: The person supervising the Work of this Section shall be personally experienced in this type of Work and shall have been regularly employed by a company engaged in underground pipe or conduit cleaning for a minimum of 2 years.

1. Furnish to the Director Representative the names and addresses of 3 similar projects which the supervisor has worked on.

1.7 FIELD CONDITIONS

A. Interruption of Existing Electrical Service: Do not interrupt electrical service to facilities occupied by Director's Representative Owner or others unless permitted under the following conditions, and then only after arranging to provide temporary electrical service according to requirements indicated:

1. Notify [**Architect** and Owner'sRepresentative] no fewer than [**two**] days in advance of proposed interruption of electrical service.
2. Do not proceed with interruption of electrical service without [**Architect's**] [Owner's Representative] written permission.

B. Ground Water: Assume ground-water level is at grade level unless a lower water table is noted on Drawings.

C. Ground Water: Assume ground-water level is [**36 inches (900 mm)**] below ground surface unless a higher water table is noted on Drawings.

PART 2 - PRODUCTS

2.1 METAL CONDUIT AND FITTINGS

A. GRC: Comply with ANSI C80.1 and UL 6.

B. Coated Steel Conduit: PVC-coated [**GRC**] .

1. Comply with NEMA RN 1.
2. Coating Thickness: 0.040 inch (1 mm), minimum.

C. Manufacturers: Subject to compliance with requirements, available manufacturers offering products that may be incorporated into the Work include, but are not limited to the following:

1. Atkore International (Allied Tube & Conduit).
2. Western Tube and Conduit Corporation.
3. Wheatland Tube Company.
4. Or equal.

D. Listed and labeled as defined in NFPA 70, by a nationally recognized testing laboratory, and marked for intended location and application.

2.2 RIGID NONMETALLIC DUCT

A. Underground Plastic Utilities Duct: [**Type EPC-80-PVC**] RNC, complying with NEMA TC 2 and UL 651, with matching fittings complying with NEMA TC 3 by same manufacturer as duct.

B. Manufacturers: Subject to compliance with requirements, available manufacturers offering products that may be incorporated into the Work include, but are not limited to the following:

1. Cantex Inc.
2. National Pipe & Plastics.
3. Opti-Com Manufacturing Network, Inc (OMNI).
4. Or equal.

C. Listed and labeled as defined in NFPA 70, by a nationally recognized testing laboratory, and marked for intended location and application.

D. Solvents and Adhesives: As recommended by conduit manufacturer.

2.3 FLEXIBLE NONMETALLIC DUCTS

A. HDPE Duct: [**Type EPEC-40 HDPE**] [**Type EPEC-80 HDPE**], complying with NEMA TC 7 and UL 651A.

1. Manufacturers: Subject to compliance with requirements, available manufacturers offering products that may be incorporated into the Work include, but are not limited to the following:

   a. Carlon; a brand of Thomas & Betts Corporation.
   b. National Pipe & Plastics.
   c. Opti-Com Manufacturing Network, Inc (OMNI).
   d. Or equal.

2. Listed and labeled as defined in NFPA 70, by a nationally recognized testing laboratory, and marked for intended location and application.

2.4 DUCT ACCESSORIES

A. Duct Spacers: Factory-fabricated, rigid, PVC interlocking spacers; sized for type and size of duct with which used and selected to provide minimum duct spacing indicated while supporting duct during concreting or backfilling.

1. Manufacturers: Subject to compliance with requirements, available manufacturers offering products that may be incorporated into the Work include, but are not limited to the following:

   a. Atkore International (Allied Tube & Conduit).
   b. Cantex Inc.
   c. Carlon; a brand of Thomas & Betts Corporation.
   d. Or equal.

B. Concrete Warning Planks: Nominal 12 by 24 by 3 inches (300 by 600 by 75 mm) in size, manufactured from 6000-psi (41-MPa) concrete.

1. Color: Red dye added to concrete during batching.
2. Mark each plank with "ELECTRIC" in 2-inch- (50-mm-) high, 3/8-inch- (10-mm-) deep letters.

C. Drag Line

1. Minimum 1/8” polypropylene monofilament utility rope:

a. American Synthetic Ropes' Flotorope
b. Greenlee Tool Co.'s 2 ply Rope 431
c. Ideal's Pro-Pull Rope 3/16
d. Thomas Industries/Jet Line Products Rope 232.

D. Conduit Seals

1. Wood or plastic plugs designed for the purpose or a contrasting color cement/sand mixture. Seals shall be removable for future use of conduits. Seals shall include waterproof tag stating "CONDUIT CLEANED" and date (month, year).

2.5 PRECAST CONCRETE HANDHOLES AND BOXES

A. Description: Factory-fabricated, reinforced-concrete, monolithically poured walls and bottom unless open-bottom enclosures are indicated. Frame and cover shall form top of enclosure and shall have load rating consistent with that of handhole or box.

B. Manufacturers: Subject to compliance with requirements, available manufacturers offering products that may be incorporated into the Work include, but are not limited to the following:

1. Oldcastle Precast, Inc.
2. Utility Vault Co.
3. Wausau Tile Inc.
4. Or equal.

C. Comply with ASTM C858 for design and manufacturing processes.

D. Frame and Cover: Weatherproof cast-iron frame, with cast-iron cover with recessed cover hook eyes and tamper-resistant, captive, cover-securing bolts.

E. Frame and Cover: Weatherproof steel frame, with steel cover with recessed cover hook eyes and tamper-resistant, captive, cover-securing bolts.

F. Frame and Cover: Weatherproof steel frame, with hinged steel access door assembly with tamper-resistant, captive, cover-securing bolts.

1. Cover Hinges: Concealed, with hold-open ratchet assembly.
2. Cover Handle: Recessed.

G. Frame and Cover: Weatherproof aluminum frame with hinged aluminum access door assembly with tamper-resistant, captive, cover-securing bolts.

1. Cover Hinges: Concealed, with hold-open ratchet assembly.
2. Cover Handle: Recessed.

H. Cover Finish: Nonskid finish shall have a minimum coefficient of friction of 0.50.

I. Cover Legend: Molded lettering, [**"ELECTRIC."**] [**as indicated for each service.**]

J. Configuration: Units shall be designed for flush burial and have [**open**] [**closed**] [**integral closed**] bottom unless otherwise indicated.

K. Extensions and Slabs: Designed to mate with bottom of enclosure. Same material as enclosure.

1. Extension shall provide increased depth of [**12 inches (300 mm)**]
2. Slab: Same dimensions as bottom of enclosure and arranged to provide closure.

L. Joint Sealant: Asphaltic-butyl material with adhesion, cohesion, flexibility, and durability properties necessary to withstand maximum hydrostatic pressures at the installation location with the ground-water level at grade.

M. Knockout Panels: Precast openings in walls, arranged to match dimensions and elevations of approaching duct, plus an additional 12 inches (300 mm) vertically and horizontally to accommodate alignment variations.

1. [**Splayed**] [**Center window**] location.
2. Knockout panels shall be located no less than 6 inches (150 mm) from interior surfaces of walls, floors, or frames and covers of handholes, but close enough to corners to facilitate racking of cables on walls.
3. Knockout panel opening shall have cast-in-place, welded-wire fabric reinforcement for field cutting and bending to tie in to concrete envelopes of duct.
4. Knockout panels shall be framed with at least two additional No. 3 steel reinforcing bars in concrete around each opening.
5. Knockout panels shall be 1-1/2 to 2 inches (38 to 50 mm) thick.

N. Duct Entrances in Handhole Walls: Cast end-bell or duct-terminating fitting in wall for each entering duct.

1. Type and size shall match fittings to duct to be terminated.
2. Fittings shall align with elevations of approaching duct and be located near interior corners of handholes to facilitate racking of cable.

O. Handholes [**12 inches wide by 24 inches long (300 mm wide by 600 mm long)**] and larger shall have inserts for cable racks and pulling-in irons installed before concrete is poured.

2.6 POLYMER CONCRETE HANDHOLES AND BOXES WITH POLYMER CONCRETE COVER

A. Description: Molded of sand and aggregate, bound together with a polymer resin, and reinforced with steel or fiberglass or a combination of the two.

B. Manufacturers: Subject to compliance with requirements, available manufacturers offering products that may be incorporated into the Work include, but are not limited to the following:

1. Armorcast Products Company.
2. Oldcastle Enclosure Solutions.
3. Quazite; Hubbell Incorporated, Power Systems.
4. Or equal.

C. Standard: Comply with SCTE 77. Comply with tier requirements in "Underground Enclosure Application" Article.

D. Color: [**Gray**] [**Green**].

E. Configuration: Units shall be designed for flush burial and have [**open**] [**closed**] [**integral closed**] bottom unless otherwise indicated.

F. Cover: Weatherproof, secured by tamper-resistant locking devices and having structural load rating consistent with enclosure.

G. Cover Finish: Nonskid finish shall have a minimum coefficient of friction of 0.50.

H. Cover Legend: Molded lettering, [**"ELECTRIC."**] [**as indicated for each service.**]

I. Direct-Buried Wiring Entrance Provisions: Knockouts equipped with insulated bushings or end-bell fittings, selected to suit box material, sized for wiring indicated, and arranged for secure, fixed installation in enclosure wall.

J. Duct Entrance Provisions: Duct-terminating fittings shall mate with entering duct for secure, fixed installation in enclosure wall.

K. Handholes [**12 inches wide by 24 inches long (300 mm wide by 600 mm long)**] and larger shall have factory-installed inserts for cable racks and pulling-in irons.

2.7 HIGH-DENSITY PLASTIC BOXES

A. Description: Injection molded of HDPE or copolymer-polypropylene. Cover shall be made of [**polymer concrete**] [**hot-dip galvanized-steel diamond plate**] [**plastic**].

B. Manufacturers: Subject to compliance with requirements, available manufacturers offering products that may be incorporated into the Work include, but are not limited to the following:

1. Nordic Fiberglass, Inc.
2. Oldcastle Enclosure Solutions.
3. Quazite; Hubbell Incorporated, Power Systems.
4. Or equal.

C. Standard: Comply with SCTE 77. Comply with tier requirements in "Underground Enclosure Application" Article.

D. Color: [**Gray**] [**Green**].

E. Configuration: Units shall be designed for flush burial and have [**open**] [**closed**] [**integral closed**] bottom unless otherwise indicated.

F. Cover: Weatherproof, secured by tamper-resistant locking devices and having structural load rating consistent with enclosure.

G. Cover Finish: Nonskid finish shall have a minimum coefficient of friction of 0.50.

H. Cover Legend: Molded lettering, [**"ELECTRIC."**] [**as indicated for each service.**] <**Insert legend.**>

I. Direct-Buried Wiring Entrance Provisions: Knockouts equipped with insulated bushings or end-bell fittings, selected to suit box material, sized for wiring indicated, and arranged for secure, fixed installation in enclosure wall.

J. Duct Entrance Provisions: Duct-terminating fittings shall mate with entering duct for secure, fixed installation in enclosure wall.

K. Handholes [**12 inches wide by 24 inches long (300 mm wide by 600 mm long)**] <**Insert dimensions**> and larger shall have factory-installed inserts for cable racks and pulling-in irons.

2.8 PRECAST MANHOLES

A. Description: One-piece units and units with interlocking mating sections, complete with accessories, hardware, and features.

B. Manufacturers: Subject to compliance with requirements, available manufacturers offering products that may be incorporated into the Work include, but are not limited to the following:

1. Lakelands Pre-cast Inc.
2. Oldcastle Precast, Inc.
3. The Fort Miller Co.
4. Or equal.

C. Comply with ASTM C858.

D. Structural Design Loading: Comply with requirements in "Underground Enclosure Application" Article.

E. Reinforcing meeting American Association State Highway Officials requirements for H-20 loading. Drawings shall bear the seal of a professional engineer licensed to practice in the State of New York.

F. Minimum interior dimensions as shown on the drawings for field constructed manholes.

G. Walls minimum 6 inches thick reinforced concrete. Exception:

1. Walls minimum 4-l/2 inches thick reinforced concrete for 30 x 30 inch manholes.

H. Top slab minimum 7 inches thick reinforced concrete. Exceptions:

1. Top slab minimum 6 inches thick reinforced concrete for 4 x 4 foot manholes.
2. Top slab not required for 30 x 30 inch manholes.

I. Bottom slab minimum 6 inches thick reinforced concrete. Exception:

1. Bottom slab minimum 4 inches thick reinforced concrete for 30 x 30 inch manholes.

J. Knockout Panels: Precast openings in walls, arranged to match dimensions and elevations of approaching duct, plus an additional 12 inches (300 mm) vertically and horizontally to accommodate alignment variations.

1. [**Splayed**] [**Center window**] location.
2. Knockout panels shall be located no less than 6 inches (150 mm) from interior surfaces of walls, floors, or roofs of manholes, but close enough to corners to facilitate racking of cables on walls.
3. Knockout panel opening shall have cast-in-place, welded-wire fabric reinforcement for field cutting and bending to tie in to concrete envelopes of duct.
4. Knockout panel shall be framed with at least two additional No. 3 steel reinforcing bars in concrete around each opening.
5. Knockout panels shall be 1-1/2 to 2 inches (38 to 50 mm) thick.

K. Duct Entrances in Manhole Walls: Cast end-bell or duct-terminating fitting in wall for each entering duct.

1. Type and size shall match fittings to duct to be terminated.
2. Fittings shall align with elevations of approaching duct and be located near interior corners of manholes to facilitate racking of cable.

L. Ground Rod Sleeve: Provide a 3-inch (75-mm) PVC sleeve in manhole floors 2 inches (50 mm) from the wall adjacent to, but not underneath, the duct entering the structure.

M. Joint Sealant: Asphaltic-butyl material with adhesion, cohesion, flexibility, and durability properties necessary to withstand maximum hydrostatic pressures at the installation location with the ground-water level at grade.

2.9 CAST-IN-PLACE MANHOLES

A. Description: Underground utility structures, constructed in place, complete with accessories, hardware, and features. Include concrete knockout panels for duct entrance and sleeve for ground rod.

B. Structural Design Loading: As specified in "Underground Enclosure Application" Article.

2.10 UTILITY STRUCTURE ACCESSORIES

A. Accessories for Utility Structures: Utility equipment and accessory items used for utility structure access and utility support, listed, and labeled for intended use and application.

B. Manufacturers: Subject to compliance with requirements, available manufacturers offering products that may be incorporated into the Work include, but are not limited to the following:

1. Oldcastle Precast, Inc.
2. Utility Concrete Products, LLC.

3. Wausau Tile Inc.
4. Or equal.

C. Manhole Frames, Covers, and Chimney Components: Comply with structural design loading specified for manhole.

1. Frame and Cover: Weatherproof, [**gray cast iron complying with ASTM A48/A48M, Class 30B**] [**cast aluminum**] with milled cover-to-frame bearing surfaces; diameter, [**26 inches (660 mm)**] [**29 inches (725 mm)**].

a. Cover Finish: Nonskid finish shall have a minimum coefficient of friction of 0.50.
b. Special Covers: Recess in face of cover designed to accept finish material in paved areas.

2. Cover Legend: Cast in. Selected to suit system.

a. Legend: "ELECTRIC-LV" for duct systems with power wires and cables for systems operating at 600 V and less.
b. Legend: "ELECTRIC-HV" for duct systems with medium-voltage cables.

3. Manhole Chimney Components: Precast concrete rings with dimensions matched to those of roof opening.

a. Mortar for Chimney Ring and Frame and Cover Joints: Comply with ASTM C270, Type M, except for quantities less than 2.0 cu. ft. (60 L) where packaged mix complying with ASTM C387, Type M, may be used.
b. Seal joints watertight using preformed plastic or rubber complying with ASTM C990. Install sealing material according to sealant manufacturers' written instructions.

D. Manhole Sump Frame and Grate: ASTM A48/A48M, Class 30B, gray cast iron.

E. Pulling Eyes in Concrete Walls: Eyebolt with reinforcing-bar fastening insert, 2-inch- (50-mm-) diameter eye, and 1-by-4-inch (25-by-100-mm) bolt.

1. Working Load Embedded in 6-Inch (150-mm), 4000-psi (27.6-MPa) Concrete: 13,000-lbf (58-kN) minimum tension.

F. Pulling Eyes in Nonconcrete Walls: Eyebolt with reinforced fastening, 1-1/4-inch- (31-mm-) diameter eye, rated [**2500-lbf (11-kN)**] <**Insert value**> minimum tension.

G. Pulling-in and Lifting Irons in Concrete Floors: 7/8-inch- (22-mm-) diameter, hot-dip galvanized, bent steel rod; stress relieved after forming; and fastened to reinforcing rod. Exposed triangular opening.

1. Ultimate Yield Strength: 40,000-lbf (180-kN) shear and 60,000-lbf (270-kN) tension.

H. Bolting Inserts for Concrete Utility Structure Cable Racks and Other Attachments: Flared, threaded inserts of noncorrosive, chemical-resistant, nonconductive thermoplastic material; 1/2-inch (13-mm) ID by 2-3/4 inches (69 mm) deep, flared to 1-1/4 inches (31 mm) minimum at base.

1. Tested Ultimate Pullout Strength: 12,000 lbf (53 kN) minimum.

I. Ground Rod Sleeve: 3-inch (75-mm) PVC sleeve in manhole floors 2 inches (50 mm) from the wall adjacent to, but not underneath, the ducts routed from the facility.

J. Expansion Anchors for Installation after Concrete Is Cast: Zinc-plated, carbon-steel-wedge type with stainless-steel expander clip with 1/2-inch (13-mm) bolt, 5300-lbf (24-kN) rated pullout strength, and minimum 6800-lbf (30-kN) rated shear strength.

K. Cable Rack Assembly: Steel, [**hot-rolled**] [**hot-dip**] galvanized, except insulators.

1. Stanchions: T-section or channel with provisions to connect to other sections or channels to form a continuous unit; 1-1/2 inches (38 mm) in width by nominal 24 inches (600 mm) long; punched with 14 hook holes on 1-1/2-inch (38-mm) centers for cable-arm attachment.
2. Arms: 1-1/2 inches (38 mm) wide, lengths ranging from 3 inches (75 mm) with 450-lb (204-kg) minimum capacity to 18 inches (450 mm) with 250-lb (114-kg) minimum capacity. Arms shall have slots along full length for cable ties and be arranged for secure mounting in horizontal position at any vertical location on stanchions.
3. Insulators: High-glaze, wet-process porcelain arranged for mounting on cable arms.

L. Cable Rack Assembly: Nonmetallic. Components fabricated from nonconductive, fiberglass-reinforced polymer.

1. Stanchions: Nominal 36 inches (900 mm) high by 4 inches (100 mm) wide, with provisions to connect to other sections to form a continuous unit, with minimum of nine holes for arm attachment.
2. Arms: Arranged for secure, drop-in attachment in horizontal position at any location on cable stanchions, and capable of being locked in position. Arms shall be available in lengths ranging from 3 inches (75 mm) with 450-lb (204-kg) minimum capacity to 20 inches (500 mm) with 250-lb (114-kg) minimum capacity. Top of arm shall be nominally 4 inches (100 mm) wide, and arm shall have slots along full length for cable ties.

M. Duct-Sealing Compound: Nonhardening, safe for contact with human skin, not deleterious to cable insulation, and workable at temperatures as low as 35 deg F (2 deg C). Capable of withstanding temperature of 300 deg F (150 deg C) without slump and adhering to clean surfaces of plastic ducts, metallic conduit, conduit and duct coatings, concrete, masonry, lead, cable sheaths, cable jackets, insulation materials, and common metals.

N. Fixed Manhole Ladders: Arranged for attachment to [**roof**] [**or**] [**wall**] [**and floor**] of manhole. Ladder and mounting brackets and braces shall be fabricated from [**nonconductive, structural-grade, fiberglass-reinforced resin**] [**hot-dip galvanized steel**].

O. Portable Manhole Ladders: UL-listed, heavy-duty [**wood**] [**fiberglass**] specifically designed for portable use for access to electrical manholes. Minimum length equal to distance from deepest manhole floor to grade plus 36 inches (900 mm). [**One**] <**Insert number**> required.

P. Cover Hooks: [**Heavy duty, designed for lifts 60 lbf (270 N) and greater**] [**Light duty, designed for lifts less than 60 lbf (270 N)**]. [**Two**] <**Insert number**> required.

2.11 SOURCE QUALITY CONTROL

A. Test and inspect precast concrete utility structures according to ASTM C1037.

B. Nonconcrete Handhole and Pull-Box Prototype Test: Test prototypes of manholes and boxes for compliance with SCTE 77. Strength tests shall be for specified tier ratings of products supplied.

1. Tests of materials shall be performed by an independent testing agency.
2. Strength tests of complete boxes and covers shall be by an independent testing agency or manufacturer. A qualified registered professional engineer shall certify tests by manufacturer.
3. Testing machine pressure gages shall have current calibration certification, complying with ISO 9000 and ISO 10012, and traceable to NIST standards.

PART 3 - EXECUTION

3.1 PREPARATION

A. Coordinate layout and installation of duct, duct bank, manholes, handholes, and boxes with final arrangement of other utilities, site grading, and surface features as determined in the field. Notify Architect if there is a conflict between areas of excavation and existing structures or archaeological sites to remain.

B. Coordinate elevations of duct and duct-bank entrances into manholes, handholes, and boxes with final locations and profiles of duct and duct banks, as determined by coordination with other utilities, underground obstructions, and surface features. Revise locations and elevations as required to suit field conditions and to ensure that duct and duct bank will drain to manholes and handholes, and as approved by Architect.

3.2 UNDERGROUND DUCT APPLICATION

A. Duct for Electrical Cables More Than 600 V: [**Type EPC-80-PVC**] RNC, concrete-encased unless otherwise indicated.

B. Duct for Electrical Feeders 600 V and Less: [**Type EPC-80-PVC**] RNC, concrete-encased unless otherwise indicated.

C. Duct for Electrical Feeders 600 V and Less: [**Type EPC-80-PVC**] RNC, direct-buried unless otherwise indicated.

D. Duct for Electrical Branch Circuits: [**Type EPC-80-PVC**] RNC, direct-buried unless otherwise indicated.

E. Bored Underground Duct: [**Type EPEC-40-HDPE**] [**Type EPEC-80-HDPE**] unless otherwise indicated.

F. Underground Ducts Crossing [**Paved Paths**] [**Walks**] [**and**] [**Driveways**] [**Roadways**]: Type EPC-80 PVC RNC, encased in reinforced concrete.

G. Stub-ups: Concrete-encased [**RNC**] [**GRC**] [**PVC-coated GRC**].

3.3 UNDERGROUND ENCLOSURE APPLICATION

A. Handholes and Boxes for 600 V and Less:

1. Units in Roadways and Other Deliberate Traffic Paths: Precast concrete. AASHTO HB 17, [**H-10**] [**H-20**] structural load rating.
2. Units in Driveway, Parking Lot, and Off-Roadway Locations, Subject to Occasional, Nondeliberate Loading by Heavy Vehicles: [**Precast concrete, AASHTO HB 17, H-20**] [**Polymer concrete, SCTE 77, Tier 15**] [**Fiberglass enclosures with polymer concrete frame and cover, SCTE 77, Tier 15**] [**Fiberglass-reinforced polyester resin, SCTE 77, Tier 15**] [**High-density plastic, SCTE 77, Tier 15**] structural load rating.
3. Units in Sidewalk and Similar Applications with a Safety Factor for Nondeliberate Loading by Vehicles: [**Precast concrete, AASHTO HB 17, H-10**] [**Polymer concrete units, SCTE 77, Tier 8**] [**Heavy-duty fiberglass units with polymer concrete frame and cover, SCTE 77, Tier 8**] [**High-density plastic, SCTE 77, Tier 8**] structural load rating.
4. Units Subject to Light-Duty Pedestrian Traffic Only: [**Fiberglass-reinforced polyester resin**] [**High-density plastic**], structurally tested according to SCTE 77 with 3000-lbf (13 345-N) vertical loading.
5. Cover design load shall not exceed the design load of the handhole or box.

B. Manholes: [**Precast**] [**or**] [**cast-in-place**] concrete.

1. Units Located in Roadways and Other Deliberate Traffic Paths by Heavy or Medium Vehicles: H-20 structural load rating according to AASHTO HB 17.
2. Units Not Located in Deliberate Traffic Paths by Heavy or Medium Vehicles: H-10 load rating according to AASHTO HB 17.

3.4 EARTHWORK

A. Restoration: Replace area [**immediately after backfilling is completed**] [**or**] [**after construction vehicle traffic in immediate area is complete**].

B. Restore surface features at areas disturbed by excavation and re-establish original grades unless otherwise indicated. Replace removed sod immediately after backfilling is completed.

C. Restore areas disturbed by trenching, storing of dirt, cable laying, and other work. Restore vegetation and include necessary topsoiling, fertilizing, liming, seeding, sodding, sprigging, and mulching. Comply with Section 329200 "Turf and Grasses" and Section 329300 "Plants."

3.5 DUCT AND DUCT-BANK INSTALLATION

A. Where indicated on Drawings, install duct, spacers, and accessories into the duct-bank configuration shown. Duct installation requirements in this Section also apply to duct bank.

B. Install duct according to NEMA TCB 2.

C. Slope: Pitch duct a minimum slope of 1:300 down toward manholes and handholes and away from buildings and equipment. Slope duct from a high point between two manholes, to drain in both directions.

D. Curves and Bends: Use 5-degree angle couplings for small changes in direction. Use manufactured long sweep bends with a minimum radius of [**48 inches (1200 mm)**] [**12.5 feet (4 m)**] [**25 feet (7.5 m)**], both horizontally and vertically, at other locations unless otherwise indicated.

1. Duct shall have maximum of two 90 degree bends or the total of all bends shall be no more 180 degrees between pull points.

E. Joints: Use solvent-cemented joints in duct and fittings and make watertight according to manufacturer's written instructions. Stagger couplings so those of adjacent duct do not lie in same plane.

F. Installation Adjacent to High-Temperature Steam Lines: Where duct is installed parallel to underground steam lines, perform calculations showing the duct will not be subject to environmental temperatures above 40 deg C. Where environmental temperatures are calculated to rise above 40 deg C, and anywhere the duct crosses above an underground steam line, install insulation blankets listed for direct burial to isolate the duct bank from the steam line.

G. End Bell Entrances to Manholes and Concrete and Polymer Concrete Handholes: Use end bells, spaced approximately 10 inches (250 mm) o.c. for 5-inch (125-mm) duct, and vary proportionately for other duct sizes.

1. Begin change from regular spacing to end-bell spacing 10 feet (3 m) from the end bell, without reducing duct slope and without forming a trap in the line.
2. Expansion and Deflection Fittings: Install an expansion and deflection fitting in each duct in the area of disturbed earth adjacent to manhole or handhole. Install an expansion fitting near the center of all straight line direct-buried duct with calculated expansion of more than 3/4 inch (19 mm).
3. Grout end bells into structure walls from both sides to provide watertight entrances.

H. Terminator Entrances to Manholes and Concrete and Polymer Concrete Handholes: Use manufactured, cast-in-place duct terminators, with entrances into structure spaced approximately 6 inches (150 mm) o.c. for 4-inch (100-mm) duct, and vary proportionately for other duct sizes.

1. Begin change from regular spacing to terminator spacing 10 feet (3 m) from the terminator, without reducing duct line slope and without forming a trap in the line.

2. Expansion and Deflection Fittings: Install an expansion and deflection fitting in each duct in the area of disturbed earth adjacent to manhole or handhole. Install an expansion fitting near the center of all straight line duct with calculated expansion of more than 3/4 inch (19 mm).

I. Building Wall Penetrations: Make a transition from underground duct to GRC at least 10 feet (3 m) outside the building wall, without reducing duct line slope away from the building and without forming a trap in the line. Use fittings manufactured for RNC-to-GRC transition. Install GRC penetrations of building walls as specified in Section 260544 "Sleeves and Sleeve Seals for Electrical Raceways and Cabling."

J. Sealing: Provide temporary closure at terminations of duct with pulled cables. Seal spare duct at terminations. Use sealing compound and plugs to withstand at least 15-psig (1.03-MPa) hydrostatic pressure.

K. Pulling Cord: Install 200-lbf- (1000-N-) test nylon cord in empty ducts.

L. Concrete-Encased Ducts and Duct Bank:

1. Excavate trench bottom to provide firm and uniform support for duct. Prepare trench bottoms as specified in Section 312000 "Earth Moving" for pipes less than 6 inches (150 mm) in nominal diameter.
2. Width: Excavate trench 12 inches (300 mm) wider than duct on each side.
3. Width: Excavate trench 3 inches (75 mm) wider than duct on each side.
4. Depth: Install so top of duct envelope is at least 24 inches (600 mm) below finished grade in areas not subject to deliberate traffic, and at least 30 inches (750 mm) below finished grade in deliberate traffic paths for vehicles unless otherwise indicated.
5. Support duct on duct spacers coordinated with duct size, duct spacing, and outdoor temperature.
6. Spacer Installation: Place spacers close enough to prevent sagging and deforming of duct, with not less than [**four**] [**five**] spacers per 20 feet (6 m) of duct. Place spacers within 24 inches (600 mm) of duct ends. Stagger spacers approximately 6 inches (150 mm) between tiers. Secure spacers to earth and to duct to prevent floating during concreting. Tie entire assembly together using fabric straps; do not use tie wires or reinforcing steel that may form conductive or magnetic loops around ducts or duct groups.
7. Minimum Space between Duct: 3 inches (75 mm) between edge of duct and exterior envelope wall, 2 inches (50 mm) between ducts for like services, and 4 inches (100 mm) between power and communications ducts.
8. Elbows: Use manufactured duct elbows for stub-ups, at building entrances, and at changes of direction in duct unless otherwise indicated. Extend encasement throughout length of elbow.
9. Elbows: Use manufactured GRC elbows for stub-ups, at building entrances, and at changes of direction in duct run.

    a. Couple RNC duct to GRC with adapters designed for this purpose and encase coupling with 3 inches (75 mm) of concrete.
    b. Stub-ups to Outdoor Equipment: Extend concrete-encased GRC horizontally a minimum of 60 inches (1500 mm) from edge of base. Install insulated grounding bushings on terminations at equipment.

1) Stub-ups shall be [**flush with**] [**minimum 4 inches (100 mm)aboveinches above**]finished floor and minimum 3 inches (75 mm)frominches from conduit side to edge of slab.

c. Stub-ups to Indoor Equipment: Extend concrete-encased GRC horizontally a minimum of 60 inches (1500 mm) from edge of wall. Install insulated grounding bushings on terminations at equipment.

1) Stub-ups shall be [**flush with**] [**minimum 4 inches (100 mm)aboveinches above**]finished floor and no less than 3 inches (75 mm)frominches from conduit side to edge of slab.

10. Reinforcement: Reinforce concrete-encased duct where crossing disturbed earth and where indicated. Arrange reinforcing rods and ties without forming conductive or magnetic loops around ducts or duct groups.
11. Forms: Use walls of trench to form side walls of duct bank where soil is self-supporting and concrete envelope can be poured without soil inclusions; otherwise, use forms.
12. Concrete Cover: Install a minimum of 3 inches (75 mm) of concrete cover between edge of duct to exterior envelope wall, 2 inches (50 mm) between duct of like services, and 4 inches (100 mm) between power and communications ducts.
13. Concreting Sequence: Pour each run of envelope between manholes or other terminations in one continuous operation.

a. Start at one end and finish at the other, allowing for expansion and contraction of duct as its temperature changes during and after the pour. Use expansion fittings installed according to manufacturer's written instructions or use other specific measures to prevent expansion-contraction damage.
b. If more than one pour is necessary, terminate each pour in a vertical plane and install 3/4-inch (15-mm) reinforcing-rod dowels extending a minimum of 18 inches (450 mm) into concrete on both sides of joint near corners of envelope.

14. Pouring Concrete: Comply with requirements in "Concrete Placement" Article in Section 033000 "Cast-in-Place Concrete." Place concrete carefully during pours to prevent voids under and between duct and at exterior surface of envelope. Do not allow a heavy mass of concrete to fall directly onto ducts. Allow concrete to flow around duct and rise up in middle, uniformly filling all open spaces. Do not use power-driven agitating equipment unless specifically designed for duct-installation application.

M. Direct-Buried Duct and Duct Bank:

1. Excavate trench bottom to provide firm and uniform support for duct. Comply with requirements in Section 312000 "Earth Moving" for preparation of Prepare trench bottoms for pipes less than 6 inches (150 mm) in nominal diameter.
2. Width: Excavate trench 12 inches (300 mm) wider than duct on each side.
3. Width: Excavate trench 3 inches (75 mm) wider than duct on each side.
4. Depth: Install top of duct at least 36 inches (900 mm) below finished grade unless otherwise indicated.
5. Set elevation of bottom of duct bank below frost line.
6. Support ducts on duct spacers coordinated with duct size, duct spacing, and outdoor temperature.

7. Spacer Installation: Place spacers close enough to prevent sagging and deforming of duct, with not less than [**four**] [**five**] spacers per 20 feet (6 m) of duct. Place spacers within 24 inches (600 mm) of duct ends. Stagger spacers approximately 6 inches (150 mm) between tiers. Secure spacers to earth and to ducts to prevent floating during concreting. Tie entire assembly together using fabric straps; do not use tie wires or reinforcing steel that may form conductive or magnetic loops around ducts or duct groups.
8. Install duct with a minimum of 3 inches (75 mm) between ducts for like services and 6 inches (150 mm) between power and communications duct.
9. Elbows: Install manufactured duct elbows for stub-ups, at building entrances, and at changes of direction in duct direction unless otherwise indicated. Encase elbows for stub-up ducts throughout length of elbow.
10. Install manufactured GRC elbows for stub-ups, at building entrances, and at changes of direction in duct.

    a. Couple RNC duct to GRC with adapters designed for this purpose, and encase coupling with 3 inches (75 mm) of concrete.
    b. Stub-ups to Outdoor Equipment: Extend concrete-encased GRC horizontally a minimum of 60 inches (1500 mm) from edge of base. Install insulated grounding bushings on terminations at equipment.

        1) Stub-ups shall be [**flush with**] [**minimum 4 inches (100 mm)above inches above**]finished floor and minimum 3 inches (75 mm)from inches from conduit side to edge of slab.

    c. Stub-ups to Indoor Equipment: Extend concrete-encased GRC horizontally a minimum of 60 inches (1500 mm) from edge of wall. Install insulated grounding bushings on terminations at equipment.

        1) Stub-ups shall be [**flush with**] [**minimum 4 inches (100 mm)above inches above**]finished floor and no less than 3 inches (75 mm)from inches from conduit side to edge of slab.

11. After installing first tier of duct, backfill and compact. Start at tie-in point and work toward end of duct run, leaving ducts at end of run free to move with expansion and contraction as temperature changes during this process. Repeat procedure after placing each tier. After placing last tier, hand place backfill to 4 inches (100 mm) over duct and hand tamp. Firmly tamp backfill around ducts to provide maximum supporting strength. Use hand tamper only. After placing controlled backfill over final tier, make final duct connections at end of run and complete backfilling with normal compaction. Comply with requirements in Section 312000 "Earth Moving" for installation of backfill materials.

    a. Place minimum 3 inches (75 mm) of sand as a bed for duct. Place sand to a minimum of 6 inches (150 mm) above top level of duct.
    b. Place minimum 6 inches (150 mm) of engineered fill above concrete encasement of duct.

N. Warning Planks: Bury warning planks approximately 12 inches (300 mm) above direct-buried duct, placing them 24 inches (600 mm) o.c. Align planks along the width and along the centerline of duct or duct bank. Provide an additional plank for each 12-inch (300-mm) increment of duct-

bank width over a nominal 18 inches (450 mm). Space additional planks 12 inches (300 mm) apart, horizontally.

O. Underground-Line Warning Tape: Bury [**nonconducting**] [**conducting**] underground line specified in Section 260553 "Identification for Electrical Systems" no less than 12 inches (300 mm) above all concrete-encased duct and duct banks[**and approximately 12 inches (300 mm) below grade**]. Align tape parallel to and within 3 inches (75 mm) of centerline of duct bank. Provide an additional warning tape for each 12-inch (300-mm) increment of duct-bank width over a nominal 18 inches (450 mm). Space additional tapes 12 inches (300 mm) apart, horizontally.

3.6 INSTALLATION OF CONCRETE MANHOLES, HANDHOLES, AND BOXES

A. Cast-in-Place Manhole Installation:

1. Finish interior surfaces with a smooth-troweled finish.
2. Knockouts for Future Duct Connections: Form and pour concrete knockout panels 1-1/2 to 2 inches (38 to 50 mm) thick, arranged as indicated.

B. Precast Concrete Handhole and Manhole Installation:

1. Comply with ASTM C891 unless otherwise indicated.
2. Install units level and plumb and with orientation and depth coordinated with connecting duct, to minimize bends and deflections required for proper entrances.
3. Unless otherwise indicated, support units on a level bed of crushed stone or gravel, graded from 1-inch (25-mm) sieve to No. 4 (4.75-mm) sieve and compacted to same density as adjacent undisturbed earth.

C. Elevations:

1. Manhole Roof: Install with rooftop at least 15 inches (375 mm) below finished grade.
2. Manhole Frame: In paved areas and trafficways, set frames flush with finished grade. Set other manhole frames 1 inch (25 mm) above finished grade.
3. Install handholes with bottom below frost line, <**Insert depth of frost line below grade at Project site**> below grade.
4. Handhole Covers: In paved areas and trafficways, set surface flush with finished grade. Set covers of other handholes 1 inch (25 mm) above finished grade.
5. Where indicated, cast handhole cover frame integrally with handhole structure.

D. Drainage: Install drains in bottom of manholes where indicated. Coordinate with drainage provisions indicated.

E. Manhole Access: Circular opening in manhole roof; sized to match cover size.

1. Manholes with Fixed Ladders: Offset access opening from manhole centerlines to align with ladder.
2. Install chimney, constructed of precast concrete collars and rings, to support cast-iron frame to connect cover with manhole roof opening. Provide moisture-tight masonry joints and waterproof grouting for frame to chimney.

F. Waterproofing: Apply waterproofing to exterior surfaces of manholes [**and handholes**] after concrete has cured at least three days. Waterproofing materials and installation are specified in [**Section 071353 "Elastomeric Sheet Waterproofing."**] [**Section 071354 "Thermoplastic Sheet Waterproofing."**] <**Insert waterproofing Section.**> After duct has been connected and grouted, and before backfilling, waterproof joints and connections, and touch up abrasions and scars. Waterproof exterior of manhole chimneys after mortar has cured at least three days.

G. Damp proofing: Apply damp proofing to exterior surfaces of manholes[**and handholes**] after concrete has cured at least three days. Damp proofing materials and installation are specified in Section 071113 "Bituminous Damp proofing." After ducts are connected and grouted, and before backfilling, dampproof joints and connections, and touch up abrasions and scars. Dampproof exterior of manhole chimneys after mortar has cured at least three days.

H. Hardware: Install removable hardware, including pulling eyes, cable stanchions, [and]cable arms, [and insulators,]as required for installation and support of cables and conductors and as indicated.

I. Fixed Manhole Ladders: Arrange to provide for safe entry with maximum clearance from cables and other items in manholes.

J. Field-Installed Bolting Anchors in Manholes and Concrete Handholes: Do not drill deeper than 3-7/8 inches (97 mm) for manholes and 2 inches (50 mm) for handholes, for anchor bolts installed in the field. Use a minimum of two anchors for each cable stanchion.

3.7 INSTALLATION OF HANDHOLES AND BOXES OTHER THAN PRECAST CONCRETE

A. Install handholes and boxes level and plumb and with orientation and depth coordinated with connecting duct, to minimize bends and deflections required for proper entrances. Use box extension if required to match depths of duct, and seal joint between box and extension as recommended by manufacturer.

B. Unless otherwise indicated, support units on a level bed of crushed stone or gravel, graded from 1/2-inch (12.5-mm) sieve to No. 4 (4.75-mm) sieve and compacted to same density as adjacent undisturbed earth.

C. Elevation: In paved areas and trafficways, set cover flush with finished grade. Set covers of other handholes 1 inch (25 mm) above finished grade.

D. Install handholes and boxes with bottom below frost line, <**Insert depth of frost line below grade at Project site**> below grade.

E. Install removable hardware, including pulling eyes, cable stanchions, cable arms, and insulators, as required for installation and support of cables and conductors and as indicated. Select arm lengths to be long enough to provide spare space for future cables, but short enough to preserve adequate working clearances in enclosure.

F. Field cut openings for duct according to enclosure manufacturer's written instructions. Cut wall of enclosure with a tool designed for material to be cut. Size holes for terminating fittings to be used, and seal around penetrations after fittings are installed.

G. For enclosures installed in [**asphalt paving**] and subject to occasional, nondeliberate, heavy-vehicle loading, form and pour a concrete ring encircling, and in contact with, enclosure and with top surface screeded to top of box cover frame. Bottom of ring shall rest on [**compacted earth**].

1. Concrete: 3000 psi (20 kPa), 28-day strength., complying with Section 033000 "Cast-in-Place Concrete," with a troweled finish.
2. Dimensions: [**10 inches wide by 12 inches deep (250 mm wide by 300 mm deep)**].

3.8 FIELD QUALITY CONTROL

A. Perform the following tests and inspections:

1. Demonstrate capability and compliance with requirements on completion of installation of underground duct, duct bank, and utility structures.
2. Pull solid aluminum or wood test mandrel through duct to prove joint integrity and adequate bend radii, and test for out-of-round duct. Provide a minimum 12-inch- (300-mm-) long mandrel equal to duct size minus 1/4 inch (6 mm). If obstructions are indicated, remove obstructions and retest.
3. Test manhole[**and handhole**] grounding to ensure electrical continuity of grounding and bonding connections. Measure and report ground resistance as specified in Section 260526 "Grounding and Bonding for Electrical Systems."

B. Correct deficiencies and retest as specified above to demonstrate compliance.

C. Prepare test and inspection reports.

3.9 CLEANING

A. Pull leather-washer-type duct cleaner, with graduated washer sizes, through full length of duct until duct cleaner indicates that duct is clear of dirt and debris. Follow with rubber duct swab for final cleaning and to assist in spreading lubricant throughout ducts.

B. Clean internal surfaces of manholes, including sump.

1. Sweep floor, removing dirt and debris.
2. Remove foreign material.

END OF SECTION 260543

SECTION 260544

SLEEVES AND SLEEVE SEALS FOR ELECTRICAL RACEWAYS AND CABLING

PART 1 - GENERAL

1.1 RELATED DOCUMENTS

A. Drawings and general provisions of the Contract, including General and Supplementary Conditions and Division 01 Specification Sections, apply to this Section.

1.2 SUMMARY

A. Section Includes:

1. Round sleeves.
2. Rectangular sleeves.
3. Sleeve seal systems.
4. Grout.
5. Pourable sealants.
6. Foam sealants

1.3 SUBMITTALS

A. Submittals for this section are subject to the re-evaluation fee identified in Article 4 of the General Conditions.

B. Manufacturer's installation instructions shall be provided along with product data.

C. Submittals shall be provided in the order in which they are specified and tabbed (for combined submittals).

D. Product Data: For each type of product.

E. Submit an Environmental Product Declaration (EPD) from the manufacturer for steel pipe sleeves within this specification section, if available. A statement of the contractor's good faith effort to obtain the EPD shall be provided if not available.

1. Manufacturer-provided EPDs must be Product Specific Type III (Third-Party Reviewed), in adherence with ISO 14025 *Environmental labels and declarations*, ISO 14044 *Environmental management – Life cycle assessment*, and ISO 21930 *Core rules for environmental product declarations of construction products and services.*

PART 2 - PRODUCTS

2.1 ROUND SLEEVES

A. Wall Sleeves, Steel:

1. Description: ASTM A53/A53M, Type E, Grade B, Schedule 40, zinc coated, plain ends and integral waterstop.

B. Wall Sleeves, Cast Iron:

1. Description: Cast or fabricated "wall pipe," equivalent to ductile-iron pressure pipe, with plain ends and integral waterstop.

C. Pipe Sleeves, PVC:

1. Description: ASTM D1785, Schedule 40.

D. Molded Sleeves, PVC:

1. Description: With nailing flange for attaching to wooden forms.

E. Molded Sleeves, PE, or PP:

1. Description: Removable, tapered-cup shaped, and smooth outer surface with nailing flange for attaching to wooden forms.

F. Sheet Metal Sleeves, Galvanized Steel, Round:

1. Description: Galvanized-steel sheet; thickness not less than 0.0239-inch (0.6-mm); round tube closed with welded longitudinal joint, with tabs for screw-fastening the sleeve to the board.

2.2 RECTANGULAR SLEEVES

A. Sheet Metal Sleeves, Galvanized Steel, Rectangular:

1. Description:

a. Material: Galvanized sheet steel.
b. Minimum Metal Thickness:

1) For sleeve cross-section rectangle perimeter less than 50 inches (1270 mm) and with no side larger than 16 inches (400 mm), thickness must be 0.052 inch (1.3 mm).
2) For sleeve cross-section rectangle perimeter not less than 50 inches (1270 mm) or with one or more sides larger than 16 inches (400 mm), thickness must be 0.138 inch (3.5 mm).

2.3 SLEEVE SEAL SYSTEMS

A. Description: Modular sealing device, designed for field assembly, to fill annular space between sleeve and raceway or cable or between raceway and cable.

1. Sealing Elements: [**EPDM**] [**Nitrile (Buna N)**] rubber interlocking links shaped to fit surface of pipe. Include type and number required for pipe material and size of pipe.
2. Pressure Plates: [**Carbon steel**] [**Fiber-reinforced plastic**] [**Stainless steel**].
3. Connecting Bolts and Nuts: [**Carbon steel, with corrosion-resistant coating,**] [**Stainless steel**] of length required to secure pressure plates to sealing elements.

2.4 GROUT

A. Description: Nonshrink; recommended for interior and exterior sealing openings in non-fire-rated walls or floors.

1. Standard: ASTM C1107/C1107M, Grade B, post-hardening and volume-adjusting, dry, hydraulic-cement grout.
2. Design Mix: 5000-psi (34.5-MPa), 28-day compressive strength.
3. Packaging: Premixed and factory packaged.

2.5 POURABLE SEALANTS

A. Description: Single-component, neutral-curing elastomeric sealants of grade indicated below.

1. Grade: Pourable (self-leveling) formulation for openings in floors and other horizontal surfaces that are not fire rated.

2.6 FOAM SEALANTS

A. Description: Multicomponent, liquid elastomers that, when mixed, expand and cure in place to produce a flexible, nonshrinking foam. Foam expansion must not damage cables or crack penetrated structure.

PART 3 - EXECUTION

3.1 INSTALLATION OF SLEEVES FOR NON-FIRE-RATED ELECTRICAL PENETRATIONS

A. Comply with NECA 1.

B. Sleeves for Conduits Penetrating Above-Grade, Non-Fire-Rated, Concrete and Masonry-Unit Floors and Walls:

1. Interior Penetrations of Non-Fire-Rated Walls and Floors:

a. Seal space outside of sleeves with mortar or grout. Pack sealing material solidly between sleeve and wall or floor so no voids remain. Tool exposed surfaces smooth; protect material while curing.
b. Seal annular space between sleeve and raceway or cable, using joint sealant appropriate for size, depth, and location of joint. Comply with requirements in Section 079200 "Joint Sealants."

2. Use pipe sleeves unless penetration arrangement requires rectangular sleeved opening.
3. Size pipe sleeves to provide [**1/4-inch (6.4-mm)**] annular clear space between sleeve and raceway or cable, unless sleeve seal system is to be installed [**or seismic criteria require different clearance**].
4. Install sleeves for wall penetrations unless core-drilled holes or formed openings are used. Install sleeves during erection of walls. Cut sleeves to length for mounting flush with both surfaces of walls. Deburr after cutting.
5. Install sleeves for floor penetrations. Extend sleeves installed in floors [**2 inches (50 mm)**] above finished floor level. Install sleeves during erection of floors.

C. Sleeves for Conduits Penetrating Non-Fire-Rated Wall Assemblies:

1. Use circular metal sleeves unless penetration arrangement requires rectangular sleeved opening.
2. Seal space outside of sleeves with approved joint compound for wall assemblies.

D. Roof-Penetration Sleeves: Seal penetration of individual raceways and cables with flexible boot-type flashing units applied in coordination with roofing work.

E. Aboveground, Exterior-Wall Penetrations: Seal penetrations using [**steel**] [**cast-iron**] pipe sleeves and mechanical sleeve seal systems. Size sleeves to allow for 1-inch (25-mm) annular clear space between pipe and sleeve for installing mechanical sleeve seals.

F. Underground, Exterior-Wall and Floor Penetrations:

1. Install [**steel**] [**cast-iron**] pipe sleeves with integral waterstops. Size sleeves to allow for 1-inch (25-mm) annular clear space between raceway or cable and sleeve for installing sleeve seal system. Install sleeve during construction of floor or wall.
2. Install steel pipe sleeves. Size sleeves to allow for 1-inch (25-mm) annular clear space between raceway or cable and sleeve for installing sleeve seal system. Grout sleeve into wall or floor opening.

3.2 INSTALLATION OF RECTANGULAR SLEEVES AND SLEEVE SEALS

A. Install sleeves in existing walls without compromising structural integrity of walls. Do not cut structural elements without reinforcing the wall to maintain the designed weight bearing and wall stiffness.

B. Install conduits and cable with no crossings within the sleeve.

C. Fill opening around conduits and cables with expanding foam without leaving voids.

D. Provide metal sheet covering at both wall surfaces and finish to match surrounding surfaces. Metal sheet must be same material as sleeve.

3.3 INSTALLATION OF SLEEVE SEAL SYSTEMS

A. Install sleeve seal systems in sleeves in exterior concrete walls and slabs-on-grade at raceway entries into building.

B. Install type and number of sealing elements recommended by manufacturer for raceway or cable material and size. Position raceway or cable in center of sleeve. Assemble mechanical sleeve seals and install in annular space between raceway or cable and sleeve. Tighten bolts against pressure plates that cause sealing elements to expand and make watertight seal.

END OF SECTION 260544

SECTION 260548
VIBRATION AND SESMIC CONTROLS FOR ELECTRICAL SYSTEMS

PART 1 - GENERAL

1.01 DESCRIPTION OF WORK

A. Provide a complete system of vibration isolation for each item of Electrical equipment and apparatus as specified herein, as shown on the Drawings and as needed for a complete and proper installation. Product specific requirements are contained herein; Section 260100, General Provisions for Electrical Work, shall be referred to for general requirements.

1.02 RELATED SECTIONS

A. Division 26 Sections

1.03 SUPPLEMENTAL SUBMITTALS

A. Product Data: Submit Manufacturer's Product Data for the vibration isolating supports required for each item of Electrical equipment (motors, emergency generators, etc.).

1. Submit schedule showing manufacturers' mounting sizes and guarantee deflections.

B. Shop Drawings: Submit Shop Drawings for the vibration isolating supports required for each item of Electrical equipment, showing details of intermediate structural steel members and method of attachment required for installation of vibration isolating devices.

C. Calculations: Provide for all connections of equipment to the structure as described in Article 3.02. Drawings and calculations must be stamped by the Contractor's New York State registered professional engineer.

D. Qualifications

1. Manufacturer

2. Contractor's design professional

E. Manufacturer's certification as specified in the Field Quality Control Article.

F. Maintenance data.

1.04 SUPPLEMENTAL QUALITY ASSURANCE

A. Manufacturer: Isolator/Bracing manufacturer shall be regularly engaged in the manufacturing of vibration isolating and thermal expansion bracing materials, whose products have been in satisfactory use in similar service for not less than five years.

B. The Contractor shall engage the services of a third party Registered Professional Engineer (not a direct employee), who shall have a minimum of four years design experience in non-structural building components and shall be licensed in New York State.

C. Manufacturer's Regulating Requirements: Contractors shall determine vibration isolation sizes and locations per the criteria defined in Article 3.02.C.

PART 2 – PRODUCTS

2.01 MANUFACTURERS

A. Approved manufacturers:

Mason Industries, Inc.
Vibration Eliminator Co.
Vibration Mountings & Controls Inc.
Korfund Dynamics Co.

2.02 MATERIALS

A. Spring Mounts

1. Housed Spring Mounts: Spring type mounts shall consist of cast telescoping housings containing one or more steel springs. The mount shall be provided with built-in leveling bolt(s), resilient inserts of neoprene to act as guides for upper and lower housings and with ribbed neoprene acoustical pads bonded to the bottom of the lower housing. The lower housing shall have slotted holes in the base, to permit fastening of the mount to the floor.

2. Free standing spring mounts shall be laterally stable without housing. Each mount shall be provided with a leveling bolt, a ribbed neoprene pad on the underside of the base, and means of securing the spring base to the floor when specified. Freestanding spring mounts shall be used where a floating pad system or an inertia block is specified.

B. Neoprene-in-Shear Mounts: Each neoprene-in-shear type mount shall consist of a steel top plate and steel base plate completely enclosed in oil resistant neoprene. Top plate shall have a threaded bolt hole for attachment of equipment to mount. Base plate shall have bolt holes, to permit fastening of the mount to the floor when specified. Underside of base plate shall have ribbed, neoprene construction. Single neoprene-in-shear mounts shall have a maximum deflection of 0.25". Double neoprene-in-shear mounts shall have a maximum deflection of 0.50".

C. Hanger Type Isolators: Hanger type isolators shall consist of a steel housing incorporating a single or double neoprene-in-shear element or a steel spring, or a combination of these two isolators, as needed to achieve the required static deflection. Provide threaded rods for attachment of hanger to overhead structure and to equipment.

D. Steel Bases

1. Integral structural steel bases for equipment shall be rectangular in shape, and each member shall be of wide flange beam or channel shaped cross-section. Bases for equipment having motors in the X or Y position may be of "L" shape configuration. Depth of section shall be equal to minimum of 1/10th of the longest span of the equipment. Built-in adjustable motor slide rails shall be provided as an integral part of the base. Joints shall be continuously welded.

2. Structural steel bases under equipment shall be wide flange beams of size specified, or shown on the Drawings. Two beams shall be provided for larger equipment, one under each side along the length of the unit and extending 6" beyond the ends. A steel bearing plate, 3/8" thick, shall be welded to the top flange of the beams at the location of each vibration isolator. The isolator shall be bolted to the bearing plate.

E. Inertia Blocks: An inertia block shall consist of a rectangular shaped reinforced concrete block on which pumping equipment shall be mounted and which shall be supported on spring isolators above the floor. The pouring form for the block shall be made of 6" (minimum height) steel channels welded together and shall include reinforcing bars running in two directions, welded in place or welded wire fabric. Anchor bolts for the pump's base shall be secured within the pouring form. The number and location of brackets for mounting

isolating springs shall be determined by vibration isolation manufacturer. Pouring form shall include space for the pump inlet base elbow. Design and fabrication of the pouring form, including all of its parts, shall be the responsibility of the vibration isolation manufacturer. Pump support shall be designed to provide 95% (minimum) vibration isolation.

F. Floating Pad System: Floating pad system shall be constructed in the manner indicated on the Drawings and as specified. The floating pad shall be isolated from the building structure by means of 2" high neoprene isolators, factory bonded to the underside of 1/2" thick exterior grade plywood. Placement and density of isolators shall be in accordance with load requirements and with recommendation of vibration isolation manufacturer. Line interior face of the curb with 1" thick light density cork. Cover the plywood form with a sheet of polyethylene film, overlapping the cork boards and curbs. Pour a lightweight concrete slab on top of the polyethylene film, inside the corkboards. After the concrete has set, remove the excess polyethylene film, and fill the joint between the slab and the curb with a mastic seal.

PART 3 - EXECUTION

3.01 PREPARATION

A. For vibration isolation equipment installed indoors, all metal parts, including rails and bases, shall be painted at the factory with one coat of primer paint and one coat of aluminum paint. Other means or rust resisting painting may be accepted, subject to prior approval.

B. Vibration isolation equipment installed outdoors shall have all steel parts hot dipped galvanized, all bolts cadmium plated, and all springs cadmium plated and neoprene coated.

C. Vibration isolation equipment installed outdoors shall be designed and installed to resist wind loads in accordance with the NYS Building Code.

3.02 SUPPLEMENTAL INSTALLATION

A. At each equipment location, provide the required deflection under the imposed load to produce uniform loading and deflection even when equipment weight is not evenly distributed. Jack inertia blocks and bases into position and wedge in place before spring loading; leveling bolts shall not be used as jacking screws. After equipment is in place and springs are loaded through leveling bolts, remove wedges and jacks. Isolators shall be suitable for the lowest operating speed of the equipment.

B. Where the floor is waterproofed or finished with waterproof cement, install vibration isolation in such manner that the waterproofing is not damaged.

C. Isolation equipment shall be in accordance with the following table:

Lowest RPM	Inches Deflection (Min.)	% Efficiency (Min.)	Type
1750 & over	.25	95	Single neoprene-in-shear
1200-1749	.50	95	Double neoprene-in-shear
1000-1199	.75	95	Spring
570-999	1.25	90-95	Spring
520-569	1.5	90	Spring

330-519	2.0	80-90	Spring
Up to 329	3.5	80	Spring

H. Equipment located on a roof or floor above grade shall be installed on vibration isolators providing a minimum isolation efficiency of 90 percent at motor RPM with a maximum static deflection of 4” and shall incorporate a leveling device and resilient pad having a minimum thickness of 1/4". Vibration cutoff switches shall be provided.

I. The minimum horizontal isolation required for equipment conduit shall be installed as follows:

1. Metal conduit connected to power driven equipment shall be resiliently supported from or on the building structure from the power driven equipment for a distance of the maximum of 50 conduit diameters or the first three conduit hangers, whichever is the longest length. The isolators shall be pre-compressed spring and neoprene type hangers. Pre-compressed spring and neoprene type hangers must also be used in all transverse braced isolated locations. Horizontal runs in all other locations throughout the building shall be isolated by spring and neoprene hangers that need not be pre-compressed. Floor supported conduits shall rest on isolators such as Mason Industries SLR spring mounts (or approved equal).

   The resilient isolators shall have a minimum static deflection of 1” for all conduit with a 4” or larger in actual outside diameter and 1/2” (12.7 mm) for conduit with less than 4” in actual outside diameter.

2. Equipment that is located on any floor or roof other than a floor on grade, and that is not power driven but is connected by metal conduit to power driven equipment, shall be resiliently supported from or on the building structure, for a distance of the maximum of 50 conduit diameters or the first three conduit hangers from the equipment, whichever is the longest length. The resilient supports shall be vibration isolators having a minimum static deflection of 1” and shall incorporate approved resilient pads having a minimum thickness of 1/4”.

   Hangers shall be located as close to the overhead structure as practical. Install flexible joints where conduit connects to mechanical equipment.

J. Riser isolation: Risers shall be suspended from spring and neoprene hangers or supported by spring mountings, anchored with all-directional anchors equipped with neoprene isolation and washers, and guided with vertical sliding guides. Steel spring deflection shall be a minimum of 0.75”. Submittals must include riser diagrams and calculations showing anticipated movement at each support point, initial and final loads on the building structure, and spring deflection changes. Submittal data shall include certification that the riser system has been examined for excessive stresses and that none will exist in the proposed design.

3.03 SCHEDULE

A. Contractor shall submit a schedule for approval by Engineer of Record indicating the type of support for each item of Electrical Equipment.

3.04 FIELD QUALITY CONTROL

A. On completion of the vibration isolation system herein specified, the representative of the vibration isolation manufacturer shall inspect the completed systems and report in writing any installation error, improperly selected isolation devices, or any other faults that could affect performance. Submit report indicating steps taken to properly complete the isolation work. Both of these reports shall be reviewed by the Owner’s Representative for final approval.

END OF SECTION

SECTION 260553

IDENTIFICATION FOR ELECTRICAL SYSTEMS

PART 1 - GENERAL

1.1 RELATED DOCUMENTS

A. Drawings and general provisions of the Contract, including General and Supplementary Conditions and Division 01 Specification Sections, apply to this Section.

1.2 SUMMARY

A. Section Includes:

1. Labels.
2. Bands and tubes.
3. Tapes and stencils.
4. Tags.
5. Signs.
6. Cable ties.
7. Miscellaneous identification products.

1.3 SUBMITTALS

A. Submittals for this section are subject to the re-evaluation fee identified in Article 4 of the General Conditions.

B. Manufacturer's installation instructions shall be provided along with product data.

C. Submittals shall be provided in the order in which they are specified and tabbed (for combined submittals).

D. Product Data: For each type of product.

1. Include construction details, material descriptions, dimensions of individual components and profiles, and finishes for electrical identification products.

E. Samples: For each type of label and sign to illustrate composition, size, colors, lettering style, mounting provisions, and graphic features of identification products.

F. Identification Schedule: For each piece of electrical equipment and electrical system components to be an index of nomenclature for electrical equipment and system components used in identification signs and labels. Use same designations indicated on Drawings.

G. Delegated-Design Submittal: For arc-flash hazard study.

H. Submittals for this section are subject to the re-evaluation fee identified in Article 4 of the General Conditions.

PART 2 - PRODUCTS

2.1 PERFORMANCE REQUIREMENTS

A. Comply with ASME A13.1[**and IEEE C2**].

B. Comply with NFPA 70.

C. Comply with 29 CFR 1910.144 and 29 CFR 1910.145.

D. Comply with ANSI Z535.4 for safety signs and labels.

E. Adhesive-attached labeling materials, including label stocks, laminating adhesives, and inks used by label printers, shall comply with UL 969.

F. Thermal Movements: Allow for thermal movements from ambient and surface temperature changes.

1. Temperature Change: [**120 deg F, ambient; 180 deg F, material surfaces**].

2.2 COLOR AND LEGEND REQUIREMENTS

A. Raceways and Cables Carrying Circuits at 600 V or Less:

1. [**Black letters on an orange field**] .
2. Legend: Indicate voltage[**and system or service type**].

B. Color-Coding for Phase- [**and Voltage-Level**] Identification, 600 V or Less: Use colors listed below for ungrounded [**service**] [**feeder**] [**and**] [**branch-circuit**] conductors.

1. Color shall be factory applied[**or field applied for sizes larger than No. 8 AWG if authorities having jurisdiction permit**].
2. Colors for 208/120-V Circuits:

a. Phase A: Black.
b. Phase B: Red.
c. Phase C: Blue.

3. Colors for 240-V Circuits:

a. Phase A: Black.
b. Phase B: Red.

4. Colors for 480/277-V Circuits:

a. Phase A: Brown.
b. Phase B: Orange.
c. Phase C: Yellow.

5. Color for Neutral: [**White**] [**or**] [**gray**].
6. Color for Equipment Grounds: [**Bare copper**] [**Green**] [**Green with a yellow stripe**].
7. Colors for Isolated Grounds: Green with two or more yellow stripes.

C. Raceways and Cables Carrying Circuits at More Than 600 V:

1. Black letters on an orange field.

2. Legend: "DANGER - CONCEALED HIGH VOLTAGE WIRING."

D. Warning Label Colors:

1. Identify system voltage with black letters on an orange background.

E. Warning labels and signs shall include, but are not limited to, the following legends:

1. Multiple Power Source Warning: "DANGER - ELECTRICAL SHOCK HAZARD - EQUIPMENT HAS MULTIPLE POWER SOURCES."
2. Workspace Clearance Warning: "WARNING - OSHA REGULATION - AREA IN FRONT OF ELECTRICAL EQUIPMENT MUST BE KEPT CLEAR FOR 36 INCHES."
3. **warning signs or labels (for , arc flash, multiple services and voltages, and photovoltaic system**.
4. **Provide signage on Normal Service Equipment indicating Generator and PV System Equipment locations**.

F. Equipment Identification Labels:

1. Black letters on a white field.

G. Nameplates:

1. General: Precision engrave letters and numbers with uniform margins, character size minimum 3/16 inch high.

a. Phenolic: Two color laminated engravers stock, 1/16 inch minimum thickness, machine engraved to expose inner core color (white).
b. Aluminum: Standard aluminum alloy plate stock, minimum .032 inches thick, engraved areas enamel filled or background enameled with natural aluminum engraved characters.
c. Materials for Outdoor Applications: As recommended by nameplate manufacturer to suit environmental conditions.

2.3 LABELS

A. Vinyl Wraparound Labels: Preprinted, flexible labels laminated with a clear, weather- and chemical-resistant coating and matching wraparound clear adhesive tape for securing label ends.

1. Manufacturers: Subject to compliance with requirements, available manufacturers offering products that may be incorporated into the Work include, but are not limited to the following:

a. Brady Corporation.
b. Panduit Corp.
c. Seton Identification Products; a Brady Corporation ccompany.
d. Or equal.

B. Snap-around Labels: Slit, pretensioned, flexible, preprinted, color-coded acrylic sleeves, with diameters sized to suit diameters and that stay in place by gripping action.

1. Manufacturers: Subject to compliance with requirements, available manufacturers offering products that may be incorporated into the Work include, but are not limited to the following:

a. Brady Corporation.
b. Panduit Corp.
c. Seton Identification Products; a Brady Corporation ccompany.
d. Or equal.

C. Self-Adhesive Wraparound Labels: [**Preprinted**] [**Write-on**], 3-mil- thick, [**polyester**] [**vinyl**] flexible label with acrylic pressure-sensitive adhesive.

1. Manufacturers: Subject to compliance with requirements, available manufacturers offering products that may be incorporated into the Work include, but are not limited to the following:

    a. Brady Corporation.
    b. Ideal Industries, Inc.
    c. Thomas & Betts Corp.
    d. Or equal.

2. Self-Lamination: Clear; UV-, weather- and chemical-resistant; self-laminating, protective shield over the legend. Labels sized such that the clear shield overlaps the entire printed legend.
3. Marker for Labels:

    a. Permanent, waterproof, black ink marker recommended by tag manufacturer.
    b. Machine-printed, permanent, waterproof, black ink recommended by printer manufacturer.

D. Self-Adhesive Labels: [**Polyester**] [**Vinyl**], thermal, transfer-printed, 3-mil- thick, multicolor, weather- and UV-resistant, pressure-sensitive adhesive labels, configured for intended use and location.

1. Manufacturers: Subject to compliance with requirements, available manufacturers offering products that may be incorporated into the Work include, but are not limited to the following:

    a. Brady Corporation.
    b. Ideal Industries, Inc.
    c. Thomas & Betts Corp.
    d. Or equal.

2. Minimum Nominal Size:

    a. 1-1/2 by 6 inches for raceway and conductors.
    b. 3-1/2 by 5 inches for equipment.
    c. As required by authorities having jurisdiction.

2.4 BANDS AND TUBES

A. Snap-around, Color-Coding Bands: Slit, pretensioned, flexible, solid-colored acrylic sleeves, 2 inches long, with diameters sized to suit diameters and that stay in place by gripping action.

1. Manufacturers: Subject to compliance with requirements, available manufacturers offering products that may be incorporated into the Work include, but are not limited to the following:

    a. Brady Corporation.
    b. HellermannTyton.
    c. Panduit Corp.
    d. Or equal.

B. Heat-Shrink Preprinted Tubes: Flame-retardant polyolefin tubes with machine-printed identification labels, sized to suit diameter and shrunk to fit firmly. Full shrink recovery occurs at a maximum of 200 deg F. Comply with UL 224.

1. Manufacturers: Subject to compliance with requirements, available manufacturers offering products that may be incorporated into the Work include, but are not limited to the following:

    a. 3M.
    b. Brady Corporation.
    c. Panduit Corp.
    d. Or equal.

2.5 TAPES AND STENCILS

A. Marker Tapes: Vinyl or vinyl-cloth, self-adhesive wraparound type, with circuit identification legend machine printed by thermal transfer or equivalent process.

1. Manufacturers: Subject to compliance with requirements, available manufacturers offering products that may be incorporated into the Work include, but are not limited to the following:

a. HellermannTyton.
b. Ideal Industries, Inc.
c. Panduit Corp.
d. Or equal.

B. Self-Adhesive Vinyl Tape: Colored, heavy duty, waterproof, fade resistant; not less than 3 mils thick by 1 to 2 inches wide; compounded for outdoor use.

1. Manufacturers: Subject to compliance with requirements, available manufacturers offering products that may be incorporated into the Work include, but are not limited to the following:

a. Brady Corporation.
b. Carlton Industries, LP.
c. emedco.
d. Or equal.

C. Tape and Stencil: 4-inch- wide black stripes on 10-inch centers placed diagonally over orange background and are 12 inches wide. Stop stripes at legends.

1. Manufacturers: Subject to compliance with requirements, available manufacturers offering products that may be incorporated into the Work include, but are not limited to the following:

a. Brimar Industries, Inc.
b. HellermannTyton.
c. Seton Identification Products; a Brady Corporation company.
d. Or equal.

D. Floor Marking Tape: 2-inch- wide, 5-mil pressure-sensitive vinyl tape, with [**black and white**] [**yellow and black**] stripes and clear vinyl overlay.

1. Manufacturers: Subject to compliance with requirements, available manufacturers offering products that may be incorporated into the Work include, but are not limited to the following:

a. 3M.
b. Carlton Industries, LP.
c. Seton Identification Products; a Brady Corporation company.
d. Or equal.

E. Underground-Line Warning Tape:

1. Manufacturers: Subject to compliance with requirements, available manufacturers offering products that may be incorporated into the Work include, but are not limited to the following:

a. Brady Corporation.
b. Ideal Industries, Inc.
c. Seton Identification Products; a Brady Corporation company.
d. Or equal.

2. Tape:

a. Recommended by manufacturer for the method of installation and suitable to identify and locate underground electrical [**and communications**]utility lines.
b. Printing on tape shall be permanent and shall not be damaged by burial operations.
c. Tape material and ink shall be chemically inert and not subject to degradation when exposed to acids, alkalis, and other destructive substances commonly found in soils.

3. Color and Printing:

a. Comply with ANSI Z535.1, ANSI Z535.2, ANSI Z535.3, ANSI Z535.4, and ANSI Z535.5.
b. Inscriptions for Red-Colored Tapes: "ELECTRIC LINE, HIGH VOLTAGE"
c. Inscriptions for Orange-Colored Tapes: "TELEPHONE CABLE, CATV CABLE, COMMUNICATIONS CABLE, OPTICAL FIBER CABLE".

4. Tape [**Type I**]:

a. Pigmented polyolefin, bright colored, [**continuous-printed on one side with the inscription of the utility,**]compounded for direct-burial service.
b. Width: 3 inches.
c. Thickness: 4 mils.
d. Weight: 18.5 lb/1000 sq. ft..
e. Tensile according to ASTM D882: 30 lbf and 2500 psi.

5. Tape [**Type II**]:

a. Multilayer laminate, consisting of high-density polyethylene scrim coated with pigmented polyolefin; bright colored, [**continuous-printed on one side with the inscription of the utility,**]compounded for direct-burial service.
b. Width: 3 inches.
c. Thickness: 12 mils.
d. Weight: 36.1 lb/1000 sq. ft..
e. Tensile according to ASTM D882: 400 lbf and 11,500 psi.

6. Tape [**Type ID**]:

a. Detectable three-layer laminate, consisting of a printed pigmented polyolefin film, a solid aluminum-foil core, and a clear protective film that allows inspection of the continuity of the conductive core; bright colored, [**continuous-printed on one side with the inscription of the utility,**]compounded for direct-burial service.
b. Width: 3 inches.
c. Overall Thickness: 5 mils.
d. Foil Core Thickness: 0.35 mil.
e. Weight: 28 lb/1000 sq. ft..
f. Tensile according to ASTM D882: 70 lbf and 4600 psi.

7. Tape [**Type IID**]:

a. Reinforced, detectable three-layer laminate, consisting of a printed pigmented woven scrim, a solid aluminum-foil core, and a clear protective film that allows inspection of the continuity of the conductive core; bright-colored, [**continuous-printed on one side with the inscription of the utility,**]compounded for direct-burial service.
b. Width: 3 inches.
c. Overall Thickness: 8 mils.
d. Foil Core Thickness: 0.35 mil.
e. Weight: 34 lb/1000 sq. ft..
f. Tensile according to ASTM D882: 300 lbf and 12,500 psi.

F. Stenciled Legend: In nonfading, waterproof, [**black**] ink or paint. Minimum letter height shall be [**1 inch**] .

2.6 TAGS

A. Metal Tags: Brass or aluminum, 2 by 2 by 0.05 inch, with stamped legend, punched for use with self-locking cable tie fastener.

1. Manufacturers: Subject to compliance with requirements, available manufacturers offering products that may be incorporated into the Work include, but are not limited to the following:

a. Brady Corporation.
b. Carlton Industries, LP.
c. Seton Identification Products; a Brady Corporation company.
d. Or equal.

B. Nonmetallic Preprinted Tags: Polyethylene tags, [**0.015 inch**] [**0.023 inch**] thick, color-coded for phase and voltage level, with factory [**screened**] [**printed**] permanent designations; punched for use with self-locking cable tie fastener.

1. Manufacturers: Subject to compliance with requirements, available manufacturers offering products that may be incorporated into the Work include, but are not limited to the following:

a. Brady Corporation.
b. Panduit Corp.
c. Seton Identification Products; a Brady Corporation company.
d. Or equal.

C. Write-on Tags:

1. Manufacturers: Subject to compliance with requirements, available manufacturers offering products that may be incorporated into the Work include, but are not limited to the following:

a. Brimar Industries, Inc.
b. Carlton Industries, LP.
c. Seton Identification Products; a Brady Corporation company.
d. Or equal.

2. Polyester Tags: [**0.010 inch**] [**0.015 inch**] thick, with corrosion-resistant grommet and cable tie for attachment.
3. Marker for Tags:

a. Permanent, waterproof, black ink marker recommended by tag manufacturer.
b. Machine-printed, permanent, waterproof, black ink marker recommended by printer manufacturer.

2.7 SIGNS

A. Baked-Enamel Signs:

1. Manufacturers: Subject to compliance with requirements, available manufacturers offering products that may be incorporated into the Work include, but are not limited to the following:

a. Carlton Industries, LP.
b. Champion America.
c. Marking Services, Inc.
d. Or equal.

2. Preprinted aluminum signs, [**high-intensity reflective,**]punched or drilled for fasteners, with colors, legend, and size required for application.
3. 1/4-inch grommets in corners for mounting.
4. Nominal Size: 7 by 10 inches.

B. Metal-Backed Butyrate Signs:

1. Weather-resistant, nonfading, preprinted, cellulose-acetate butyrate signs, with 0.0396-inch galvanized-steel backing, punched and drilled for fasteners, and with colors, legend, and size required for application.
2. 1/4-inch grommets in corners for mounting.
3. Nominal Size: 10 by 14 inches.

C. Laminated Acrylic or Melamine Plastic Signs:

1. Manufacturers: Subject to compliance with requirements, available manufacturers offering products that may be incorporated into the Work include, but are not limited to the following:

   a. Brady Corporation.
   b. Carlton Industries, LP.
   c. Marking Services, Inc.
   d. Or equal.

2. Engraved legend.
3. Thickness:

   a. For signs up to 20 sq. in., minimum 1/16 inch thick.
   b. For signs larger than 20 sq. in., 1/8 inch thick.

   c. Engraved legend with [**black letters on white face**] [**white letters on a dark gray background**] <**Insert colors**>.
   d. [**Punched or drilled for mechanical fasteners with 1/4-inch grommets in corners for mounting**] [**Self-adhesive**].
   e. Framed with mitered acrylic molding and arranged for attachment at applicable equipment.

2.8 CABLE TIES

A. Manufacturers: Subject to compliance with requirements, available manufacturers offering products that may be incorporated into the Work include, but are not limited to the following:

1. HellermannTyton.
2. Ideal Industries, Inc.
3. Panduit Corp.
4. Or equal.

B. General-Purpose Cable Ties: Fungus inert, self-extinguishing, one piece, self-locking, and Type 6/6 nylon.

1. Minimum Width: 3/16 inch.
2. Tensile Strength at 73 Deg F according to ASTM D638: 12,000 psi.
3. Temperature Range: Minus 40 to plus 185 deg F.
4. Color: Black, except where used for color-coding.

C. UV-Stabilized Cable Ties: Fungus inert, designed for continuous exposure to exterior sunlight, self-extinguishing, one piece, self-locking, and Type 6/6 nylon.

1. Minimum Width: 3/16 inch.
2. Tensile Strength at 73 Deg F according to ASTM D638: 12,000 psi.
3. Temperature Range: Minus 40 to plus 185 deg F.
4. Color: Black.

D. Plenum-Rated Cable Ties: Self-extinguishing, UV stabilized, one piece, and self-locking.

1. Minimum Width: 3/16 inch.

2. Tensile Strength at 73 Deg F according to ASTM D638: 7000 psi.
3. UL 94 Flame Rating: 94V-0.
4. Temperature Range: Minus 50 to plus 284 deg F.
5. Color: Black.

2.9 MISCELLANEOUS IDENTIFICATION PRODUCTS

A. Paint: Comply with requirements in painting Sections for paint materials and application requirements. Retain paint system applicable for surface material and location (exterior or interior).

B. Fasteners for Labels and Signs: Self-tapping, stainless-steel screws or stainless-steel machine screws with nuts and flat and lock washers.

PART 3 - EXECUTION

3.1 PREPARATION

A. Self-Adhesive Identification Products: Before applying electrical identification products, clean substrates of substances that could impair bond, using materials and methods recommended by manufacturer of identification product.

3.2 INSTALLATION

A. Verify and coordinate identification names, abbreviations, colors, and other features with requirements in other Sections requiring identification applications, Drawings, Shop Drawings, manufacturer's wiring diagrams, and operation and maintenance manual. Use consistent designations throughout Project.

B. Install identifying devices before installing acoustical ceilings and similar concealment.

C. Verify identity of each item before installing identification products.

D. Coordinate identification with Project Drawings, manufacturer's wiring diagrams, and operation and maintenance manual.

E. Apply identification devices to surfaces that require finish after completing finish work.

F. Install signs with approved legend to facilitate proper identification, operation, and maintenance of electrical systems and connected items.

G. System Identification for Raceways and Cables under 600 V: Identification shall completely encircle cable or conduit. Place identification of two-color markings in contact, side by side.

1. Secure tight to surface of conductor, cable, or raceway.

H. System Identification for Raceways and Cables over 600 V: Identification shall completely encircle cable or conduit. Place adjacent identification of two-color markings in contact, side by side.

1. Secure tight to surface of conductor, cable, or raceway.

I. Auxiliary Electrical Systems Conductor Identification: Identify field-installed alarm, control, and signal connections.

J. Emergency Operating Instruction Signs: Install instruction signs with white legend on a red background with minimum 3/8-inch- high letters for emergency instructions at equipment used for [**power transfer**] [**load shedding**].

K. Elevated Components: Increase sizes of labels, signs, and letters to those appropriate for viewing from the floor.

L. Accessible Fittings for Raceways: Identify the covers of each junction and pull box of the following systems with the wiring system legend and system voltage. System legends shall be as follows:

1. "EMERGENCY POWER."
2. "POWER."
3. "UPS."
4. “PV.”

M. Vinyl Wraparound Labels:

1. Secure tight to surface of raceway or cable at a location with high visibility and accessibility.
2. Attach labels that are not self-adhesive type with clear vinyl tape, with adhesive appropriate to the location and substrate.

N. Snap-around Labels: Secure tight to surface at a location with high visibility and accessibility.

O. Self-Adhesive Wraparound Labels: Secure tight to surface at a location with high visibility and accessibility.

P. Self-Adhesive Labels:

1. On each item, install unique designation label that is consistent with wiring diagrams, schedules, and operation and maintenance manual.
2. Unless otherwise indicated, provide a single line of text with 1/2-inch- high letters on 1-1/2-inch- high label; where two lines of text are required, use labels 2 inches high.

Q. Snap-around Color-Coding Bands: Secure tight to surface at a location with high visibility and accessibility.

R. Heat-Shrink, Preprinted Tubes: Secure tight to surface at a location with high visibility and accessibility.

S. Marker Tapes: Secure tight to surface at a location with high visibility and accessibility.

T. Self-Adhesive Vinyl Tape: Secure tight to surface at a location with high visibility and accessibility.

1. Field-Applied, Color-Coding Conductor Tape: Apply in half-lapped turns for a minimum distance of 6 inches where splices or taps are made. Apply last two turns of tape with no tension to prevent possible unwinding.

U. Tape and Stencil: Comply with requirements in painting Sections for surface preparation and paint application.

V. Floor Marking Tape: Apply stripes to finished surfaces following manufacturer's written instructions.

W. Underground Line Warning Tape:

1. During backfilling of trenches, install continuous underground-line warning tape directly above cable or raceway at 6 to 8 inches below finished grade. Use multiple tapes where width of multiple lines installed in a common trench [**or concrete envelope**]exceeds 16 inches overall.
2. Limit use of underground-line warning tape to direct-buried cables.
3. Install underground-line warning tape for direct-buried cables and cables in raceways.

X. Metal Tags:

1. Place in a location with high visibility and accessibility.
2. Secure using [**general-purpose**] [**UV-stabilized**] [**plenum-rated**] cable ties.

Y. Nonmetallic Preprinted Tags:

1. Place in a location with high visibility and accessibility.
2. Secure using [**general-purpose**] [**UV-stabilized**] [**plenum-rated**] cable ties.

Z. Write-on Tags:

1. Place in a location with high visibility and accessibility.
2. Secure using [**general-purpose**] [**UV-stabilized**] [**plenum-rated**] cable ties.

AA. Baked-Enamel Signs:

1. Attach signs that are not self-adhesive type with mechanical fasteners appropriate to the location and substrate.
2. Unless otherwise indicated, provide a single line of text with 1/2-inch- high letters on minimum 1-1/2-inch-high sign; where two lines of text are required, use signs minimum 2 inches high.

BB. Metal-Backed Butyrate Signs:

1. Attach signs that are not self-adhesive type with mechanical fasteners appropriate to the location and substrate.
2. Unless otherwise indicated, provide a single line of text with 1/2-inch- high letters on 1-1/2-inch- high sign; where two lines of text are required, use labels 2 inches high.

CC. Laminated Acrylic or Melamine Plastic Signs:

1. Attach signs that are not self-adhesive type with mechanical fasteners appropriate to the location and substrate.
2. Unless otherwise indicated, provide a single line of text with 1/2-inch- high letters on 1-1/2-inch- high sign; where two lines of text are required, use labels 2 inches high.

DD. Cable Ties: General purpose, for attaching tags, except as listed below:

1. Outdoors: UV-stabilized nylon.
2. In Spaces Handling Environmental Air: Plenum rated.

3.3 IDENTIFICATION SCHEDULE

A. Install identification materials and devices at locations for most convenient viewing without interference with operation and maintenance of equipment. Install access doors or panels to provide view of identifying devices.

B. Identify conductors, cables, and terminals in enclosures and at junctions, terminals, pull points, and locations of high visibility. Identify by system and circuit designation.

C. Concealed Raceways, Duct Banks, More Than 600 V, within Buildings: Tape and stencil. Stencil legend "DANGER - CONCEALED HIGH-VOLTAGE WIRING" with 3-inch- high, black letters on 20-inch centers.

1. Locate identification at changes in direction, at penetrations of walls and floors, and at [**10-foot**] maximum intervals.

D. Accessible Raceways, Armored and Metal-Clad Cables, More Than 600 V: [**Vinyl wraparound labels**] [**Snap-around labels**] [**Self-adhesive labels**] [**Snap-around color-coding bands for raceway and cables**].

1. Locate identification at changes in direction, at penetrations of walls and floors, at 50-foot maximum intervals in straight runs, and at 25-foot maximum intervals in congested areas.

E. Accessible Raceways and Metal-Clad Cables, 600 V or Less, for Service, Feeder, and Branch Circuits, More Than [**30**] A and [**120**] V to Ground: Identify with self-adhesive [**raceway labels**] [**vinyl tape applied in bands**].

1. Locate identification at changes in direction, at penetrations of walls and floors, at 50-foot maximum intervals in straight runs, and at 25-foot maximum intervals in congested areas.

F. Accessible Fittings for Raceways and Cables within Buildings: Identify the covers of each junction and pull box of the following systems with self-adhesive labels containing the wiring system legend and system voltage. System legends shall be as follows:

1. "EMERGENCY POWER."
2. "POWER."
3. "UPS."
4. “PV”.

G. Power-Circuit Conductor Identification, 600 V or Less: For conductors in vaults, pull and junction boxes, manholes, and handholes, use [**vinyl wraparound labels**] [**self-adhesive wraparound labels**] [**snap-around labels**] [**snap-around color-coding bands**] [**self-adhesive vinyl tape**] to identify the phase.

1. Locate identification at changes in direction, at penetrations of walls and floors, at 50-foot maximum intervals in straight runs, and at 25-foot maximum intervals in congested areas.

H. Power-Circuit Conductor Identification, More Than 600 V: For conductors in vaults, pull and junction boxes, manholes, and handholes, use [**write-on tags**] [**nonmetallic preprinted tags colored and marked to indicate phase, and a separate tag with the circuit designation**].

I. Control-Circuit Conductor Identification: For conductors and cables in pull and junction boxes, manholes, and handholes, use [**write-on tags**] [**self-adhesive labels**] with the conductor or cable designation, origin, and destination.

J. Control-Circuit Conductor Termination Identification: For identification at terminations, provide [**heat-shrink preprinted tubes**] [**self-adhesive labels**] with the conductor designation.

K. Conductors to Be Extended in the Future: Attach [**write-on tags**] [**marker tape**] to conductors [**and list source**].

L. Auxiliary Electrical Systems Conductor Identification: [**Marker tape**] [**Self-adhesive vinyl tape**] that is uniform and consistent with system used by manufacturer for factory-installed connections.

1. Identify conductors, cables, and terminals in enclosures and at junctions, terminals, and pull points. Identify by system and circuit designation.

M. Locations of Underground Lines: Underground-line warning tape for power, lighting, communication, and control wiring and optical-fiber cable.

N. Concealed Raceways and Duct Banks, More Than 600 V, within Buildings: Apply floor marking tape to the following finished surfaces:

1. Floor surface directly above conduits running beneath and within 12 inches of a floor that is in contact with earth or is framed above unexcavated space.
2. Wall surfaces directly external to raceways concealed within wall.
3. Accessible surfaces of concrete envelope around raceways in vertical shafts, exposed in the building, or concealed above suspended ceilings.

O. Workspace Indication: Apply [**floor marking tape**] [**or**] [**tape and stencil**] to finished surfaces. Show working clearances in the direction of access to live parts. Workspace shall comply with NFPA 70 and 29 CFR 1926.403 unless otherwise indicated. Do not install at flush-mounted panelboards and similar equipment in finished spaces.

P. Instructional Signs: Self-adhesive labels, including the color code for grounded and ungrounded conductors.

Q. Warning Labels for Indoor Cabinets, Boxes, and Enclosures for Power and Lighting: [**Self-adhesive labels**] [**Baked-enamel warning signs**] [**Metal-backed, butyrate warning signs**].

1. Apply to exterior of door, cover, or other access.
2. For equipment with multiple power or control sources, apply to door or cover of equipment, including, but not limited to, the following:

a. Power-transfer switches.
b. Controls with external control power connections.

R. Arc Flash Warning Labeling: Self-adhesive labels.

S. Operating Instruction Signs: [**Self-adhesive labels**] [**Baked-enamel warning signs**] [**Metal-backed, butyrate warning signs**] [**Laminated acrylic or melamine plastic signs**].

T. Emergency Operating Instruction Signs: [**Self-adhesive labels**] [**Baked-enamel warning signs**] [**Metal-backed, butyrate warning signs**] [**Laminated acrylic or melamine plastic signs**] with white legend on a red background with minimum 3/8-inch- high letters for emergency instructions at equipment used for [**power transfer**] [**load shedding**] .

U. Equipment Identification Labels:

1. Indoor Equipment: [**Self-adhesive label**] [**Baked-enamel signs**] [**Metal-backed butyrate signs**] [**Laminated acrylic or melamine plastic sign**].
2. Outdoor Equipment: [**Laminated acrylic or melamine sign**] [**Stenciled legend 4 inches high**].
3. Equipment to Be Labeled:

a. Panelboards: Typewritten directory of circuits in the location provided by panelboard manufacturer. Panelboard identification shall be in the form of a [**self-adhesive, engraved,**] [**engraved,**] laminated acrylic or melamine label.
b. Enclosures and electrical cabinets.
c. Access doors and panels for concealed electrical items.
d. Switchgear.
e. Switchboards.
f. Transformers: Label that includes tag designation indicated on Drawings for the transformer, feeder, and panelboards or equipment supplied by the secondary.
g. Emergency system boxes and enclosures.
h. Enclosed switches (disconnect switches).
i. Enclosed circuit breakers.
j. Enclosed controllers.
k. Variable-speed controllers.
l. Push-button stations.
m. Power-transfer equipment.
n. Contactors.
o. Remote-controlled switches, dimmer modules, and control devices.
p. Battery-inverter units.
q. Battery racks.
r. Power-generating units.
s. Monitoring and control equipment.
t. UPS equipment.
u. PV equipment

END OF SECTION 260553

SECTION 260923

LIGHTING CONTROL DEVICES

PART 1 - GENERAL

1.1 RELATED DOCUMENTS

A. Drawings and general provisions of the Contract, including General and Supplementary Conditions and Division 01 Specification Sections, apply to this Section.

1.2 SUMMARY

A. Section Includes:

1. Electronic time switches.
2. Electromechanical dial-time switches.
3. Outdoor photoelectric switches, solid state, flexible mounting.
4. Outdoor photoelectric switches, solid state, luminaire-mounted.
5. Outdoor photoelectric switches, low voltage.
6. Daylight-harvesting switching controls.
7. Daylight-harvesting dimming controls, analog.
8. Daylight-harvesting dimming controls, digital.
9. Room lighting controller
10. Indoor occupancy and vacancy sensors.
11. Switchbox-mounted occupancy sensors.
12. Digital timer light switch.
13. High-bay occupancy sensors.
14. Extreme-temperature occupancy sensors.
15. Outdoor motion sensors.
16. Lighting contactors.
17. Emergency shunt relay.
18. Conductors and cables.

1.3 Related Requirements:

A. Submittals for this section are subject to the re-evaluation fee identified in Article 4 of the General Conditions.

B. Manufacturer’s installation instructions shall be provided along with product data.

C. Product Data: For each type of product.

D. Shop Drawings:

1. Show installation details for the following:

a. Occupancy sensors.
b. Vacancy sensors.

2. Interconnection diagrams showing field-installed wiring.
3. Include diagrams for power, signal, and control wiring.

E. Submittals for this section are subject to the re-evaluation fee identified in Article 4 of the General Conditions.

F. Coordination Drawings: Reflected ceiling plan(s) and elevations, drawn to scale, on which the following items are shown and coordinated with each other, using input from installers of the items involved:

1. Suspended ceiling components.
2. Structural members to which equipment will be attached.
3. Items penetrating finished ceiling, including the following:

a. Luminaires.
b. Air outlets and inlets.
c. Speakers.
d. Sprinklers.
e. Access panels.
f. Control modules.

G. Field quality-control reports.

H. Sample Warranty: For manufacturer's warranties.

1.4 CLOSEOUT SUBMITTALS

A. Operation and Maintenance Data: For each type of lighting control device to include in operation and maintenance manuals.

B. Software and Firmware Operational Documentation:

1. Software operating and upgrade manuals.
2. Program Software Backup: [**On USB media**] [**On manufacturer's website**]. Provide names, versions, and website addresses for locations of installed software.
3. Device address list.
4. Printout of software application and graphic screens.

1.5 WARRANTY

A. Manufacturer's Warranty: Manufacturer and Installer agree to repair or replace lighting control devices that fail(s) in materials or workmanship within specified warranty period.

1. Failures include, but are not limited to, the following:

a. Faulty operation of lighting control software.
b. Faulty operation of lighting control devices.

2. Warranty Period: [**Two**] year(s) from date of Substantial Completion.

PART 2 - PRODUCTS

2.1 ELECTRONIC TIME SWITCHES

A. Manufacturers: Subject to compliance with requirements, available manufacturers offering products that may be incorporated into the Work include, but are not limited to the following:

1. Lutron

2. Or approved equal.

B. Electronic Time Switches: Solid state, programmable, with alphanumeric display; complying with UL 917.

1. Listed and labeled as defined in NFPA 70 and marked for intended location and application.
2. Contact Configuration: [**SPST**] [**DPST**] [**DPDT**].
3. Contact Rating: [**30-A inductive or resistive, 240-V ac**] [**20-A ballast load, 120-/240-V ac**].
4. Programs:

   a. Eight on-off set points on a 24-hour schedule[**and an annual holiday schedule that overrides the weekly operation on holidays**].
   b. Two on-off set points on a 24-hour schedule, allowing different set points for each day of the week[**and an annual holiday schedule that overrides the weekly operation on holidays**].
   c. <**Insert number**> channels; each channel is individually programmable with eight on-off set points on a 24-hour schedule.
   d. <**Insert number**> channels; each channel is individually programmable with two on-off set points on a 24-hour schedule with a skip-a-day weekly schedule.
   e. <**Insert number**> channels; each channel is individually programmable with two on-off set points on a 24-hour schedule, allowing different set points for each day of the week.
   f. <**Insert number**> channels; each channel is individually programmable with 40 on-off operations per week and an annual holiday schedule that overrides the weekly operation on holidays.
   g. <**Insert number**> channels; each channel is individually programmable with 40 on-off operations per week, plus four seasonal schedules that modify the basic program and an annual holiday schedule that overrides the weekly operation on holidays.
   h. <**Insert configuration**>[**and an annual holiday schedule that overrides the weekly operation on holidays**].

   (NOTE: Time switch operation times and channels to be finalized by Owner to meet Owner approval)

5. Circuitry: Allow connection of a photoelectric relay as substitute for on-off function of a program[**on selected channels**].
6. Astronomic Time: [**All**] [**Selected**] channels.
7. Automatic daylight savings time changeover.
8. Battery Backup: Not less than seven days reserve, to maintain schedules and time clock.

2.2 ELECTROMECHANICAL DIAL-TIME SWITCHES

A. Manufacturers: Subject to compliance with requirements, available manufacturers offering products that may be incorporated into the Work include, but are not limited to the following:

1. Lutron
2. Or approved equal.

B. Electromechanical-Dial Time Switches: Comply with UL 917.

1. Listed and labeled as defined in NFPA 70, by a qualified testing agency, and marked for intended location and application.
2. Contact Configuration: [**SPST**] [**DPST**] [**SPDT**] [**DPDT**]
3. Contact Rating: [**30-A inductive or resistive, 240-V ac**] [**20-A ballast load, 120-/240-V ac**]
4. Circuitry: Allows connection of a photoelectric relay as a substitute for the on-off function of a program.
5. Astronomic time dial.
6. Eight-Day Program: Uniquely programmable for each weekday and holidays.
7. Skip-a-day mode.
8. Wound-spring reserve carryover mechanism to keep time during power failures, minimum of [**16**] hours.

2.3 OUTDOOR PHOTOELECTRIC SWITCHES, SOLID STATE, FLEXIBLE MOUNTING

A. Manufacturers: Subject to compliance with requirements, available manufacturers offering products that may be incorporated into the Work include, but are not limited to the following:

1. Intermatic, Inc.
2. Leviton Manufacturing Co., Inc.
3. NSI Industries (Tork).
4. Or equal.

B. Description: Solid state, with [**SPST**] [**DPST**] dry contacts rated for [**1000 W incandescent**] [**or**] [**1800 VA inductive**] to operate connected relay, contactor coils, or microprocessor input; complying with UL 773A, and compatible with ballasts and LED lamps.

1. Listed and labeled as defined in NFPA 70, by NRTL, and marked for intended location and application.
2. Light-Level Monitoring Range: 1.5 to 10 fc (16.14 to 108 lux), with an adjustment for turn-on and turn-off levels within that range[**, and a directional lens in front of the photocell to prevent fixed light sources from causing turn-off**].
3. Time Delay: Fifteen-second minimum, to prevent false operation.
4. Surge Protection: Metal-oxide varistor.
5. Mounting: Twist lock complies with ANSI C136.10, with base-and-stem mounting or stem-and-swivel mounting accessories as required to direct sensor to the north sky exposure[**from same source and manufacturer as switch**].
6. Failure Mode: Luminaire stays ON.

2.4 OUTDOOR PHOTOELECTRIC SWITCHES, SOLID STATE, LUMINAIRE-MOUNTED

A. Manufacturers: Subject to compliance with requirements, available manufacturers offering products that may be incorporated into the Work include, but are not limited to the following:

1. Intermatic, Inc.
2. Leviton Manufacturing Co., Inc.
3. NSI Industries (Tork).
4. Or equal.

B. Description: Solid state, with [**SPST**] [**DPST**] dry contacts rated for [**1000 W incandescent**] [**or**] [**1800 VA inductive**], to operate connected load, complying with UL 773, and compatible with CFL and LED lamps.

1. Listed and labeled as defined in NFPA 70, by a qualified testing agency, and marked for intended location and application.
2. Light-Level Monitoring Range: 1.5 to 10 fc (16.14 to 108 lux), with an adjustment for turn-on and turn-off levels within that range.
3. Time Delay: Thirty-second minimum, to prevent false operation.
4. Lightning Arrester: Air-gap type.
5. Mounting: Twist lock complying with ANSI C136.10, with base[**from same source and manufacturer as switch**].
6. Failure Mode: Luminaire stays ON.

2.5 OUTDOOR PHOTOELECTRIC SWITCHES, LOW VOLTAGE

A. Manufacturers: Subject to compliance with requirements, available manufacturers offering products that may be incorporated into the Work include, but are not limited to the following:

1. Intermatic, Inc.
2. Leviton Manufacturing Co., Inc.
3. NSI Industries (Tork).

B. Description: Solid state; one set of NO dry contacts rated for [**24 V dc at 1 A**] [**24 V ac at 1 A**], to operate connected load, complying with UL 773, and compatible with [**luminaire**] [**power pack**] [**lighting control panelboard**].

1. Listed and labeled as defined in NFPA 70, by a qualified testing agency, and marked for intended location and application.
2. Light-Level Monitoring Range: 1.5 to 10 fc (16.14 to 108 lux), with an adjustment for turn-on and turn-off levels within that range.
3. Time Delay: Thirty-second minimum, to prevent false operation.
4. Mounting: 1/2-inch (13-mm) threaded male conduit.
5. Failure Mode: Luminaire stays ON.
6. Power Pack:

a. Dry contacts rated for [**20-A**] [**ballast**] [**or**] [**LED**] load at 120- and 277-V ac, for [**13-A**] tungsten at 120-V ac, and for [**1 hp**] at 120-V ac. Sensor has 24-V dc, 150-mA, Class 2 power source, as defined by NFPA 70.

1) LED status lights to indicate load status.
2) Plenum rated.

b. Digital controller capable of accepting [**three**] [**four**] RJ45 inputs with [**one**] [**two**] outputs rated for [**20-A**] [**LED**] load at 120- and 277-V ac, for [**13-A**][**LED**] at 120- and 277-V ac, and for [**1 hp**] at 120-V ac. Sensor has 24-V dc, Class 2 power source, as defined by NFPA 70.

1) With integral current monitoring.
2) Compatible with digital addressable lighting interface.
3) Plenum rated.

2.6 DAYLIGHT-HARVESTING SWITCHING CONTROLS

A. Manufacturers: Subject to compliance with requirements, available manufacturers offering products that may be incorporated into the Work include, but are not limited to the following:

1. Lutron Electronics Co., Inc.
2. Or approved equal.

B. Description: System operates indoor lighting.

C. Sequence of Operation: As daylight increases, the lights are turned off at a predetermined level. As daylight decreases, the lights are turned on at a predetermined level.

1. Lighting control set point is based on two lighting conditions:

a. When no daylight is present.
b. When significant daylight is present (target level).
c. System programming is done with two hand-held, remote-control tools.

D. Ceiling-Mounted Switching Controls:

1. Solid-state, light-level sensor unit, with [**integrated**] power pack, that detects changes in indoor lighting levels that are perceived by the eye.
2. Solid-state, light-level sensor unit, with separate power pack, that detects changes in indoor lighting levels that are perceived by the eye.

E. Electrical Components, Devices, and Accessories:

1. Listed and labeled as defined in NFPA 70, by a qualified testing agency, and marked for intended location and application.
2. Operating Ambient Conditions: Dry interior conditions, 32 to 120 deg F (0 to 49 deg C).
3. Sensor Output:

    a. Contacts rated to operate the associated power pack, complying with UL 773A. Sensor shall be powered by the power pack.
    b. Digital signal compatible with power pack.

4. Sensor type: [**Open loop**] [**Closed loop**].
5. Zone: [**Single**] [**Multi**].
6. Power Pack:

    a. Dry contacts rated for [**20-A**] [**LED**] load at 120- and 277-V ac, for [**13-A**] tungsten at 120-V ac, and for [**1 hp**] at 120-V ac. Sensor has 24-V dc, 150-mA, Class 2 power source, as defined by NFPA 70.

        1) LED status lights to indicate load status.
        2) Plenum rated.

    b. Digital controller capable of accepting [**3**] [**4**] RJ45 inputs with [**one**] [**two**] outputs rated for [**20-A**] [**LED**] load at 120- and 277-V ac, for [**16-A]** [**LED**]at 120- and 277-V ac, and for [**1 hp**] at 120-V ac. Sensor has 24-V dc Class 2 power source, as defined by NFPA 70.

        1) With integral current monitoring
        2) Compatible with digital addressable lighting interface.
        3) Plenum rated.

7. General Space Sensors Light-Level Monitoring Range: 10 to 200 fc (108 to 2152 lux), with an adjustment for turn-on and turn-off levels within that range.
8. Atrium Space Sensors Light-Level Monitoring Range: 100 to 1000 fc (1080 to 10 800 lux), with an adjustment for turn-on and turn-off levels within that range.
9. Time Delay: Adjustable from 5 to 300 seconds to prevent cycling.
10. Set-Point Adjustment: Equip with deadband adjustment of 25, 50, and 75 percent above the "on" set point, or provide with separate adjustable "on" and "off" set points.
11. Test Mode: User selectable, overriding programmed time delay to allow settings check.
12. Control Load Status: User selectable to confirm that load wiring is correct.
13. Indicator: Two digital displays to indicate the beginning of on-off cycles.

2.7 DAYLIGHT-HARVESTING DIMMING CONTROLS, DIGITAL

A. Manufacturers: Subject to compliance with requirements, available manufacturers offering products that may be incorporated into the Work include, but are not limited to the following:

1. Lutron Electronics Co., Inc.
2. Or approved equal.

B. Description: Sensing daylight and electrical lighting levels, the system adjusts the indoor electrical lighting levels. As daylight increases, lights are dimmed.

1. Lighting control set point is based on the following two lighting conditions:

    a. When no daylight is present (target level).
    b. When significant daylight is present.

2. System programming is done with two hand-held, remote-control tools.

    a. Initial setup tool.

b. Tool for occupants to adjust the target levels by increasing the set point up to 25 percent, or by minimizing the electric lighting level.

C. Ceiling-Mounted Dimming Controls: Solid-state, light-level sensor unit, with [**integrated**] [**separate**] power pack, to detect changes in indoor lighting levels that are perceived by the eye.

D. Electrical Components, Devices, and Accessories:

1. Listed and labeled as defined in NFPA 70, by a qualified testing agency, and marked for intended location and application.
2. Sensor Output: zero- to 10-V dc to operate luminaires. Sensor is powered by controller unit.
3. Light-Level Sensor Set-Point Adjustment Range: 20 to 60 fc (120 to 640 lux).

E. Power Pack: Digital controller capable of accepting [**three**] [**four**] RJ45 inputs with [**one**] [**two**] output(s) rated for [**20-A**] [**LED**] load at 120- and 277-V ac, for [**16-A**] [**LED**] at 120- and 277-V ac, and for [**1 hp**] at 120-V ac. Sensor has 24-V dc Class 2 power source, as defined by NFPA 70.

1. With integral current monitoring.
2. Compatible with digital addressable lighting interface.
3. Plenum rated.

2.8 ROOM LIGHTING CONTROLLER

A. Manufacturers: Subject to compliance with requirements, available manufacturers offering products that may be incorporated into the Work include, but are not limited to the following:

1. Lutron Electronics Co., Inc.
2. Or approved equal.

B. General requirements for room lighting controllers:

1. Digital controller capable of accepting [3] [4] RJ45 inputs with [one] [two] outputs rated for [20-A] LED load at 120- and 277-V ac. Controller has 24-V dc Class 2 power source, as defined by NFPA 70.
2. Class 2 dimming control signal: 0-10VDV
3. Relay for plug load control
4. UL 924 relay is for automatic emergency lighting control.

2.9 INDOOR OCCUPANCY AND VACANCY SENSORS

A. Manufacturers: Subject to compliance with requirements, available manufacturers offering products that may be incorporated into the Work include, but are not limited to the following:

1. Lutron Electronics Co., Inc.
2. Or approved equal.

B. General Requirements for Sensors:

1. [**Wall**] [**Ceiling**]-mounted, solid-state indoor [**occupancy**] [**and**] [**vacancy**] sensors.
2. [**Passive infrared**] [**Ultrasonic**] [**Dual**] technology.
3. [**Integrated**] [**Separate**] power pack.
4. [**Hardwired**] [**Wireless**] connection to switch[**and BAS**] [**; and BAS and lighting control system**].
5. Listed and labeled as defined in NFPA 70, by a qualified testing agency, and marked for intended location and application.
6. Operation:

a. Occupancy Sensor: Unless otherwise indicated, turn lights on when coverage area is occupied, and turn them off when unoccupied; with a time delay for turning lights off, adjustable over a minimum range of 1 to 15 minutes.
b. Vacancy Sensor: Unless otherwise indicated, lights are manually turned on and sensor turns lights off when the room is unoccupied; with a time delay for turning lights off, adjustable over a minimum range of 1 to 15 minutes.
c. Combination Sensor: Unless otherwise indicated, sensor shall be programmed to turn lights on when coverage area is occupied and turn them off when unoccupied, or to turn off lights that have been manually turned on; with a time delay for turning lights off, adjustable over a minimum range of 1 to 15 minutes.

7. Sensor Output: [**Contacts rated to operate the connected relay, complying with UL 773A**] [**Sensor is powered from the power pack**] [**Wireless**].
8. Power: [**Line voltage**] [**Integral photovoltaic collector**].
9. Power Pack: Dry contacts rated for 20-A [**LED**] load at 120- and 277-V ac, for 13-A tungsten at 120-V ac, and for 1 hp at 120-V ac. Sensor has 24-V dc, 150-mA, Class 2 power source, as defined by NFPA 70.
10. Mounting:

a. Sensor: Suitable for mounting in any position on a standard outlet box.
b. Relay: Externally mounted through a 1/2-inch (13-mm) knockout in a standard electrical enclosure.
c. Time-Delay and Sensitivity Adjustments: Recessed and concealed behind hinged door.

11. Indicator: Digital display, to show when motion is detected during testing and normal operation of sensor.
12. Bypass Switch: Override the "on" function in case of sensor failure.
13. Automatic Light-Level Sensor: Adjustable from 2 to 200 fc (21.5 to 2152 lux); turn lights off when selected lighting level is present.

C. PIR Type: [**Wall**] [**Ceiling**] mounted; detect occupants in coverage area by their heat and movement.

1. Detector Sensitivity: Detect occurrences of 6-inch- (150-mm-) minimum movement of any portion of a human body that presents a target of not less than 36 sq. in. (232 sq. cm).
2. Detection Coverage (Room, Ceiling Mounted): Detect occupancy anywhere in a circular area of 1000 sq. ft. (93 sq. m) when mounted on a 96-inch- (2440-mm-) high ceiling.
3. Detection Coverage (Corridor, Ceiling Mounted): Detect occupancy within 90 feet (27.4 m) when mounted on a 10-foot- (3-m-) high ceiling.
4. Detection Coverage (Room, Wall Mounted): Detect occupancy anywhere within a 180-degree pattern centered on the sensor over an area of [**1000 square feet (110 square meters)**] [**2000 square feet (220 square meters)**] [**3000 square feet (330 square meters)**] when mounted 48 inches (1200 mm) above finished floor.

D. Ultrasonic Type: [**Wall**] [**Ceiling**] mounted; detect occupants in coverage area through pattern changes of reflected ultrasonic energy.

1. Detector Sensitivity: Detect a person of average size and weight moving not less than 12 inches (305 mm) in either a horizontal or a vertical manner at an approximate speed of 12 inches/s (305 mm/s).
2. Detection Coverage (Small Room): Detect occupancy anywhere within a circular area of 600 sq. ft. (56 sq. m) when mounted on a 96-inch- (2440-mm-) high ceiling.
3. Detection Coverage (Standard Room): Detect occupancy anywhere within a circular area of 1000 sq. ft. (93 sq. m) when mounted on a 96-inch- (2440-mm-) high ceiling.
4. Detection Coverage (Large Room): Detect occupancy anywhere within a circular area of 2000 sq. ft. (186 sq. m) when mounted on a 96-inch- (2440-mm-) high ceiling.
5. Detection Coverage (Corridor): Detect occupancy anywhere within 90 feet (27.4 m) when mounted on a 10-foot- (3-m-) high ceiling in a corridor not wider than 14 feet (4.3 m).
6. Detection Coverage (Room, Wall Mounted): Detect occupancy anywhere within a 180-degree pattern centered on the sensor over an area of [**1000 square feet (110 square meters)**] [**2000 square feet (220 square meters)**] [**3000 square feet (330 square meters)**] when mounted 84 inches (2100 mm) above finished floor.

E. Dual-Technology Type: [**Wall**] [**Ceiling**] mounted; detect occupants in coverage area using PIR and ultrasonic detection methods. The particular technology or combination of technologies that control on-off functions is selectable in the field by operating controls on unit.

1. Sensitivity Adjustment: Separate for each sensing technology.
2. Detector Sensitivity: Detect occurrences of 6-inch- (150-mm-) minimum movement of any portion of a human body that presents a target of not less than 36 sq. in. (232 sq. cm) and detect a person of average size and weight moving not less than 12 inches (305 mm) in either a horizontal or a vertical manner at an approximate speed of 12 inches/s (305 mm/s).
3. Detection Coverage (Standard Room): Detect occupancy anywhere within a circular area of 1000 sq. ft. (93 sq. m) when mounted on a 96-inch- (2440-mm-) high ceiling.
4. Detection Coverage (Room, Wall Mounted): Detect occupancy anywhere within a 180-degree pattern centered on the sensor over an area of [**1000 square feet (110 square meters)**] [**2000 square feet (220 square meters)**] [**3000 square feet (330 square meters)**] when mounted 48 inches (1200 mm) above finished floor.

2.10 SWITCHBOX-MOUNTED OCCUPANCY SENSORS

A. Manufacturers: Subject to compliance with requirements, available manufacturers offering products that may be incorporated into the Work include, but are not limited to the following:

1. Lutron Electronics Co., Inc.
2. Or approved equal.

B. General Requirements for Sensors: Automatic-wall-switch occupancy sensor with manual on-off switch, suitable for mounting in a single gang switchbox[**, with provisions for connection to BAS**] [**using hardwired connection**] [**using wireless connection**].

1. Listed and labeled as defined in NFPA 70, by a qualified testing agency, and marked for intended location and application[**, and shall comply with California Title 24**].
2. Occupancy Sensor Operation: Unless otherwise indicated, turn lights on when coverage area is occupied, and turn lights off when unoccupied; with a time delay for turning lights off, adjustable over a minimum range of 1 to 15 minutes.
3. Operating Ambient Conditions: Dry interior conditions, 32 to 120 deg F (0 to 49 deg C).
4. Switch Rating: Not less than 800-VA [**LED**] load at 120 V, 1200-VA [**LED**] load at 277 V, and 800-W incandescent.

C. Wall-Switch Sensor Tag WS1:

1. Standard Range: 180-degree field of view, field adjustable from 180 to 40 degrees; with a minimum coverage area of [**900 sq. ft. (84 sq. m)**] [**2100 sq. ft (196 sq. m)**].
2. Sensing Technology: [**PIR**] [**Dual technology - PIR and ultrasonic**].
3. Switch Type: [**SP.**] [**SP, dual circuit.**] [**SP, manual "on," automatic "off."**] [**SP, field-selectable automatic "on," or manual "on," automatic "off."**]
4. Capable of controlling load in three-way application.
5. Voltage: [**Match the circuit voltage**] [**120 V**] [[**Dual voltage - 120 and 277 V**].
6. Ambient-Light Override: Concealed, field-adjustable, light-level sensor from 10 to 150 fc (108 to 1600 lux). The switch prevents the lights from turning on when the light level is higher than the set point of the sensor.
7. Concealed, field-adjustable, "off" time-delay selector at up to 30 minutes.
8. Concealed, "off" time-delay selector at 30 seconds and 5, 10, and 20 minutes.
9. Adaptive Technology: Self-adjusting circuitry detects and memorizes usage patterns of the space and helps eliminate false "off" switching.
10. Color: [**White**] [**Black**]
11. Faceplate: Color matched to switch.

D. Wall-Switch Sensor Tag WS2:

1. Standard Range: 210-degree field of view, with a minimum coverage area of 900 sq. ft. (84 sq. m).
2. Sensing Technology: PIR.

3. Switch Type: [**SP.**] [**SP, dual circuit.**] [**SP, manual "on," automatic "off."**] [**SP, field-selectable automatic "on," or manual "on," automatic "off."**]
4. Capable of controlling load in three-way application.
5. Voltage: [**Match the circuit voltage**] [**120 V**] [**Dual voltage, 120 and 277 V**].
6. Ambient-Light Override: Concealed, field-adjustable, light-level sensor from 10 to 150 fc (108 to 1600 lux). The switch prevents the lights from turning on when the light level is higher than the set point of the sensor.
7. Concealed, field-adjustable, "off" time-delay selector at up to 30 minutes.
8. Concealed, "off" time-delay selector at 30 seconds and 5, 10, and 20 minutes.
9. Adaptive Technology: Self-adjusting circuitry detects and memorizes usage patterns of the space and helps eliminate false "off" switching.
10. Color: [**White**] [**Black**]
11. Faceplate: Color matched to switch.

2.11 DIGITAL TIMER LIGHT SWITCH

A. Manufacturers: Subject to compliance with requirements, available manufacturers offering products that may be incorporated into the Work include, but are not limited to the following:

1. Lutron.
2. Or approved equal.

B. Description: Combination digital timer and conventional switch lighting control unit. Switchbox-mounted, backlit LCD display, with selectable time interval in [**10**] [**20**] minute increments.

1. Rated 960 W at 120 V ac for tungsten lighting, 10 A at 120 V ac or 10 A at 277 V ac for fluorescent or LED lighting, and 1/4 hp at 120 V ac.
2. Standards: Comply with UL 20.
3. Integral relay for connection to BAS.
4. Voltage: [**Match the circuit voltage**] [**120 V**] [**Dual voltage - 120 and 277 V**].
5. Color: [**White**] [**Black**]
6. Faceplate: Color matched to switch.

2.12 HIGH-BAY OCCUPANCY SENSORS

A. Manufacturers: Subject to compliance with requirements, available manufacturers offering products that may be incorporated into the Work include, but are not limited to the following:

1. Lutron Electronics Co., Inc.
2. Or approved equal.

B. Description: Solid-state unit. The unit is designed to operate with the lamp and ballasts indicated.

1. Listed and labeled as defined in NFPA 70, by a qualified testing agency, and marked for intended location and application.
2. Operation: Turn lights on when coverage area is occupied, and to half-power when unoccupied; with a time delay for turning lights to half-power that is adjustable over a minimum range of 1 to 16 minutes.
3. Continuous Lamp Monitoring: When lamps are dimmed continuously for 24 hours, automatically turn lamps on to full power for 15 minutes for every 24 hours of continuous dimming.
4. Power: Line voltage.
5. Operating Ambient Conditions: 32 to 149 deg F.
6. Mounting: Threaded pipe.
7. Time-Delay and Sensitivity Adjustments: Recessed and concealed behind hinged door.
8. Detector Technology: PIR.
9. Power and dimming control from the luminaire ballast that has been modified to include the dimming capacitor[**and MyzerPORT option**].

C. Detector Coverage: User selectable by interchangeable PIR lenses, suitable for mounting heights from 12 to 50 feet.

D. Accessories: Obtain manufacturer's installation and maintenance kit with laser alignment tool for sensor positioning and power port connectors.

2.13 EXTREME-TEMPERATURE OCCUPANCY SENSORS

A. Manufacturers: Subject to compliance with requirements, available manufacturers offering products that may be incorporated into the Work include, but are not limited to the following:

1. Lutron.
2. Or approved equal.

B. Description: Ceiling-mounted, solid-state, extreme-temperature occupancy sensors with a separate power pack.

1. Listed and labeled as defined in NFPA 70, by a qualified testing agency, and marked for intended application in damp locations.
2. Operation: Turn lights on when coverage area is occupied, and turn them off when unoccupied; with a time delay for turning lights off, adjustable over a minimum range of 1 to 30 minutes.
3. Operating Ambient Conditions: From minus 40 to plus 125 deg F (minus 40 to plus 52 deg C).
4. Sensor Output: Contacts rated to operate the connected relay, complying with UL 773A. Sensor is powered from the power pack.
5. Power Pack: Dry contacts rated for 20-A [**LED**] load at 120- and 277-V ac, for 13-A tungsten at 120-V ac, and for 1 hp at 120-V ac. Sensor has 24-V dc, 150-mA, Class 2 power source, as defined by NFPA 70.
6. Mounting:

   a. Sensor: Suitable for mounting in any position on a standard outlet box.
   b. Relay: Externally mounted through a 1/2-inch (13-mm) knockout in a standard electrical enclosure.
   c. Time-Delay and Sensitivity Adjustments: Recessed and concealed behind cover.

7. Bypass Switch: Override the "on" function in case of sensor failure.
8. Automatic Light-Level Sensor: Adjustable from 2 to 10 fc (21.5 to 108 lux); keep lighting off when selected lighting level is present.

C. Detector Technology: PIR. Ceiling mounted; detect occupants in coverage area by their heat and movement.

1. Detector Sensitivity: Detect occurrences of 6-inch- (150-mm-) minimum movement of any portion of a human body that presents a target of not less than 36 sq. in. (232 sq. cm).
2. Detection Coverage (Room): Detect occupancy anywhere in a circular area of 1500 sq. ft. (139 sq. m) when mounted on a 96-inch- (2440-mm-) high ceiling.
3. Detection Coverage (High Bay): Detect occupancy within 25 feet (7.6 m) when mounted on a 25-foot- (7.6-m-) high ceiling.

2.14 OUTDOOR MOTION SENSORS

A. Manufacturers: Subject to compliance with requirements, available manufacturers offering products that may be incorporated into the Work include, but are not limited to the following:

1. Lutron Electronics Co., Inc.
2. Or approved equal.

B. Description: Solid-state outdoor motion sensors.

1. Listed and labeled as defined in NFPA 70, by a qualified testing agency, and marked for intended location and application [**,and shall comply with California Title 24**].

2. [**PIR**] [**Dual-technology (PIR and ultrasonic)**] type, weatherproof. Detect occurrences of 6-inch- (150-mm-) minimum movement of any portion of a human body that presents a target of not less than 36 sq. in. (232 sq. cm). Comply with UL 773A.
3. Switch Rating:

    a. Luminaire-Mounted Sensor: [**1000-W incandescent, 500-VA fluorescent/LED**]
    b. Separately Mounted Sensor: Dry contacts rated for 20-A [**ballast**] [**or**] [**LED**] load at 120- and 277-V ac, for 13-A tungsten at 120-V ac, and for 1 hp at 120-V ac. Sensor has 24-V dc, 150-mA, Class 2 power source, as defined by NFPA 70.

4. Switch Type: [**SP.**] [**SP, dual circuit.**] [**SP, manual "on," automatic "off."**] [**SP, field-selectable automatic "on," or manual "on," automatic "off."**][**With bypass switch to override the "on" function in case of sensor failure.**]
5. Voltage: [**Match the circuit voltage**] [**120-V**] [**Dual voltage, 120- and 277-V**] type.
6. Detector Coverage:

    a. Standard Range: 210-degree field of view, with a minimum coverage area of 900 sq. ft. (84 sq. m).
    b. Long Range: 180-degree field of view and 110-foot (34-m) detection range.

7. Ambient-Light Override: Concealed, field-adjustable, light-level sensor from 10 to 150 fc (108 to 1600 lux). The switch prevents the lights from turning on when the light level is higher than the set point of the sensor.
8. Concealed, field-adjustable, "off" time-delay selector at up to 30 minutes.
9. Concealed, "off" time-delay selector at 30 seconds and 5, 10, and 20 minutes.
10. Adaptive Technology: Self-adjusting circuitry detects and memorizes usage patterns of the space and help eliminate false "off" switching.
11. Operating Ambient Conditions: Suitable for operation in ambient temperatures ranging from minus 40 to plus 130 deg F (minus 40 to plus 54 deg C), rated as "raintight" according to UL 773A.

2.15 LIGHTING CONTACTORS

A. Manufacturers: Subject to compliance with requirements, available manufacturers offering products that may be incorporated into the Work include, but are not limited to the following:

    1. ABB, Electrification Products Division.
    2. Eaton.
    3. Square D; Schneider Electric USA.
    4. Or equal.

B. Description: Electrically operated and [**mechanically**] held, combination-type lighting contactors with [**fusible switch**] [**nonfused disconnect**], complying with NEMA ICS 2 and UL 508.

    1. Current Rating for Switching: Listing or rating consistent with type of load served, including tungsten filament, inductive, and high-inrush ballast (ballast with 15 percent or less THD of normal load current).
    2. Fault Current Withstand Rating: Equal to or exceeding the available fault current at the point of installation.
    3. Enclosure: Comply with NEMA 250.
    4. Provide with control and pilot devices as [**indicated on Drawings**] [**scheduled**], matching the NEMA type specified for the enclosure.

C. Interface with DDC System for HVAC: Provide hardware interface to enable the DDC system for HVAC to monitor and control lighting contactors.

    1. Monitoring: On-off status
    2. Control: On-off operation

2.16 EMERGENCY SHUNT RELAY

A. Manufacturers: Subject to compliance with requirements, available manufacturers offering products that may be incorporated into the Work include, but are not limited to the following:

1. Lutron.
2. Or approved equal.

B. Description: NC, electrically held relay, arranged for wiring in parallel with manual [**or automatic**] switching contacts; complying with UL 924.

1. Coil Rating: [**120**] V.

2.17 CONDUCTORS AND CABLES

A. Power Wiring to Supply Side of Remote-Control Power Sources: Not smaller than No. 12 AWG. Comply with requirements in Section 260519 "Low-Voltage Electrical Power Conductors and Cables."

B. Classes 2 and 3 Control Cable: Multiconductor cable with stranded-copper conductors not smaller than [**No. 18**] [**No. 22**] [**No. 24**] AWG. Comply with requirements in Section 260519 "Low-Voltage Electrical Power Conductors and Cables."

C. Class 1 Control Cable: Multiconductor cable with stranded-copper conductors not smaller than [**No. 14**] [**No. 16**] [**No. 18**] AWG. Comply with requirements in Section 260519 "Low-Voltage Electrical Power Conductors and Cables."

PART 3 - EXECUTION

3.1 EXAMINATION

A. Examine lighting control devices before installation. Reject lighting control devices that are wet, moisture damaged, or mold damaged.

B. Examine walls and ceilings for suitable conditions where lighting control devices will be installed.

C. Proceed with installation only after unsatisfactory conditions have been corrected.

3.2 INSTALLATION OF SENSORS

A. Comply with NECA 1.

B. Coordinate layout and installation of ceiling-mounted devices with other construction that penetrates ceilings or is supported by them, including light fixtures, HVAC equipment, smoke detectors, fire-suppression systems, and partition assemblies.

C. Install and aim sensors in locations to achieve not less than 90 percent coverage of areas indicated. Do not exceed coverage limits specified in manufacturer's written instructions.

3.3 INSTALLATION OF CONTACTORS

A. Comply with NECA 1.

B. Mount electrically held lighting contactors with elastomeric isolator pads to eliminate structure-borne vibration unless contactors are installed in an enclosure with factory-installed vibration isolators.

3.4 INSTALLATION OF WIRING

A. Comply with NECA 1.

B. Wiring Method: Comply with Section 260519 "Low-Voltage Electrical Power Conductors and Cables." Minimum conduit size is 1/2 inch (13 mm).

C. Wiring within Enclosures: Comply with NECA 1. Separate power-limited and nonpower-limited conductors in accordance with conductor manufacturer's written instructions.

D. Size conductors in accordance with lighting control device manufacturer's written instructions unless otherwise indicated.

E. Splices, Taps, and Terminations: Make connections only on numbered terminal strips in junction, pull, and outlet boxes; terminal cabinets; and equipment enclosures.

3.5 IDENTIFICATION

A. Identify components and power and control wiring in accordance with Section 260553 "Identification for Electrical Systems.

B. Identify controlled circuits in lighting contactors.

C. Identify circuits or luminaires controlled by photoelectric and occupancy sensors at each sensor.

D. Label time switches and contactors with a unique designation.

3.6 FIELD QUALITY CONTROL

A. Testing Agency: [**Director's Representative will engage**] [**Engage**] a qualified testing agency to evaluate lighting control devices and perform tests and inspections.

B. Manufacturer's Field Service: Engage a factory-authorized service representative company service advisor to test and inspect components, assemblies, and equipment installations, including connections.

C. Perform the following tests and inspections[**with the assistance of a factory-authorized service representative company service advisor**]:

1. Operational Test: After installing time switches and sensors, and after electrical circuitry has been energized, start units to confirm proper unit operation.
2. Test and adjust controls and safeties. Replace damaged and malfunctioning controls and equipment.

D. Lighting control devices will be considered defective if they do not pass tests and inspections.

E. Prepare test and inspection reports.

3.7 ADJUSTING

A. Occupancy Adjustments: When requested within [**12**] months from date of Substantial Completion, provide on-site assistance in adjusting lighting control devices to suit actual occupied conditions. Provide up to [**three**] visits to Project during other-than-normal occupancy hours for this purpose.

1. For occupancy and motion sensors, verify operation at outer limits of detector range. Set time delay to suit Owner’s Representative's operations.
2. For daylighting controls, adjust set points and deadband controls to suit Director’s Representative's operations.
3. Align high-bay occupancy sensors using manufacturer's laser aiming tool.

3.8 SOFTWARE SERVICE AGREEMENT

A. Technical Support: Beginning at Substantial Completion, service agreement shall include software support for minimum of [**two**] years.

B. Upgrade Service: At Substantial Completion, update software to latest version. Install and program software upgrades that become available within [**two**] years from date of Substantial Completion. Upgrading software shall include operating system and new or revised licenses for using software.

1. Upgrade Notice: At least [**30**] days to allow Owner’s Representative to schedule and access the system and to upgrade computer equipment if necessary.

3.9 DEMONSTRATION

A. [**Engage a factory-authorized service representative company service advisor to train**] [**Train**] Owner’s Representative's maintenance personnel to adjust, operate, and maintain lighting control devices.

END OF SECTION 260923

SECTION 260936
MODULAR DIMMING CONTROLS

PART 1 - GENERAL

1.1 RELATED DOCUMENTS

A. Drawings and general provisions of the Contract, including General and Supplementary Conditions and Division 01 Specification Sections, apply to this Section.

1.2 SUMMARY

A. Section Includes:

1. Wall-box multiscene dimming controls.
2. Multipreset modular dimming controls.
3. Conductors and cables.

1.3 DEFINITIONS

A. BAS: Building automation system.

B. Fade Rate: The time it takes each zone to arrive at the next scene, dependent on the degree of change in lighting level.

C. Low Voltage: As defined in NFPA 70, the term for circuits and equipment operating at less than 50 V or for remote-control, signaling, and power-limited circuits.

D. RFI: Radio-frequency interference.

E. Scene: The lighting effect created by adjusting several zones of lighting to the desired intensity.

F. SCR: Silicon-controlled rectifier.

G. Zone: A luminaire or group of luminaires controlled simultaneously as a single entity. Also known as a "channel."

1.4 ACTION SUBMITTALS

A. Submittals for this section are subject to the re-evaluation fee identified in Article 4 of the General Conditions.

B. Manufacturer’s installation instructions shall be provided along with product data.

C. Submittals shall be provided in the order in which they are specified and tabbed (for combined submittals)

D. Product Data: For each type of product.

1. For modular dimming controls; include elevation, dimensions, features, characteristics, ratings, and labels.
2. Device plates and plate color and material.
3. Ballast and lamp combinations compatible with dimmers.
4. Sound data including results of operational tests of central dimming controls.
5. Operational documentation for software and firmware.

E. Shop Drawings: Detail assemblies of standard components, custom assembled for specific application on Project. Indicate dimensions, weights, arrangement of components, and clearance and access requirements.

1. Include elevation views of front panels of control and indicating devices and control stations.
2. Include diagrams for power, signal, and control wiring.
3. Address Drawing: Reflected ceiling plan and floor plans, showing connected luminaires, address for each luminaire, and luminaire groups. Base plans on construction plans, using the same legend, symbols, and schedules.
4. Point List and Data Bus Load: Summary list of all control devices, sensors, ballasts, and other loads. Include percentage of rated connected load and device addresses.
5. Wire Termination Diagrams and Schedules: Coordinate nomenclature and presentation with Drawings and block diagram. Differentiate between manufacturer-installed and field-installed wiring.
6. Block Diagram: Show interconnections between components specified in this Section and devices furnished with power distribution system components. Indicate data communication paths and identify networks, data buses, data gateways, concentrators, and other devices used. Describe characteristics of network and other data communication lines.

F. Samples for Initial Selection: For master- and remote-control stations, and faceplates with factory-applied color finishes and technical features.

G. Samples for Verification: For master- and remote-control stations, and faceplates with factory-applied color finishes and technical features.

H. Submittals for this section are subject to the re-evaluation fee identified in Article 4 of the General Conditions.

I. Coordination Drawings: Submit evidence that lighting controls are compatible with connected monitoring and control devices and systems specified in [**Section 230923 "Direct Digital Control (DDC) System for HVAC."**]

1. Show interconnecting signal and control wiring, and interface devices that show compatibility of inputs and outputs.
2. For control interfaces and adapters, list network protocols and provide statements from manufacturers that input and output devices comply with interoperability requirements of the protocol.

J. Field quality-control reports.

K. Sample Warranty: For special warranty.

1.5 CLOSEOUT SUBMITTALS

A. Operation and Maintenance Data: For standalone multipreset modular dimming controls to include in emergency, operation, and maintenance manuals.

1. In addition to items specified in Section 017823 "Operation and Maintenance Data," include the following:

a. Software manuals.
b. Adjustments of scene preset controls, adjustable fade rates, and fade overrides.
c. Operation of adjustable zone controls.
d. Testing and adjusting of panic and emergency power features.

1.6 WARRANTY

A. Special Warranty: Manufacturer agrees to repair or replace components of standalone multipreset modular dimming controls that fail in materials or workmanship within specified warranty period.

1. Failures include, but are not limited to, the following:

a. Damage from transient voltage surges.

2. Warranty Period: Cost to repair or replace any parts for [**two**] years from date of Substantial Completion.
3. Extended Warranty Period: Cost of replacement parts (materials only, f.o.b. the nearest shipping point to Project site), for [**eight**] years, that failed in service due to transient voltage surges.

PART 2 - PRODUCTS

2.1 MANUFACTURERS

A. Manufacturers: Subject to compliance with requirements, available manufacturers offering products that may be incorporated into the Work include, but are not limited to the following:

1. Leviton Manufacturing Co., Inc.
2. Lutron Electronics Co., Inc.
3. Signify North America Corporation (formerly Philips Lighting).
4. Or equal.

2.2 SYSTEM DESCRIPTION

A. Compatibility:

1. Dimming control components shall be compatible with [**luminaires**] [**luminaires and ballasts**] [**luminaires, ballasts, and transformers**].
2. Dimming control devices shall be compatible with lighting control system components specified in Section 260923 "Lighting Control Device." or as specified in construction documents.

B. Dimmers and Dimmer Modules: Comply with UL 508.

1. Audible Noise and RFI Suppression: Solid-state dimmers shall operate smoothly over their operating ranges without audible lamp or dimmer noise or RFI. Modules shall include integral or external filters to suppress audible noise and RFI.
2. Dimmer or Dimmer-Module Rating: Not less than 125 percent of connected load unless otherwise indicated.

C. Capacities: Unit shall be rated for [**2400 W at 240-V ac and 2000 W at 120-V ac**for up to [**100**] devices or zones.

D. Surge Protection: Withstand supply power surges without impairment to performance.

1. Panels: 6000 V, 3000 A, complying with IEEE C62.41.1 and IEEE C62.41.2.
2. Other System Devices: 6000 V, 3000 A, complying with IEEE C62.41.1 and IEEE C62.41.2.

E. Off Control Position: User-selected off position of any control point shall disconnect the load from line supply.

F. Electrical Components, Devices, and Accessories: Listed and labeled as defined in NFPA 70, by a qualified testing agency, and marked for intended location and application.

2.3 WALL-BOX MULTISCENE DIMMING CONTROLS

A. Description: Factory-fabricated equipment providing manual dimming consisting of a wall-box-mounted master controller [**and indicated number of wall-box zone stations**]. Controls and dimmers shall be integrated for mounting in multigang wall box under a single wall plate. Each zone shall be adjustable to indicated number of scenes, which shall reside in the memory of zone controller.

B. Dimmers:

1. Each zone shall be configurable to control the following loads:
   a. LED lamps.
   b. Low-voltage lamps, derived with [**magnetic**] [**electronic**] transformers.
   c. Non-dim, on-off switching only.

2. Regulate voltages to maintain a constant light level, with no visible flicker, when the source voltage varies plus or minus 2 percent of rms voltage.

C. Memory:

1. Retain preset scenes and fade rates through momentary (up to 3-second) power interruptions.
2. Retain preset scenes through power failures for at least [**seven**] days.

D. Device Plates: Style, material, and color [**shall comply with Section 262726 "Wiring Devices."**] Master-control cover plate shall be one piece.

E. Master controller shall include the following:

1. Cover-mounted switches, including master off, all bright, and selectors for each scene.
2. Cover-mounted LED indicator lights, one associated with each scene switch, and one for the master off switch.
3. Concealed switches and indicators for specified function.
4. A raise/lower switch for each zone for temporary adjustments of the zone, without altering scene values stored in memory.
5. Fade time indicated by digital display for current scene while fading.
6. Cover-mounted infrared receiver.

F. Infrared Transmitters: Wireless remote control for recalling [**each**] [**four**] of the presets. Operate up to 50 feet (15 m) within line of sight of the master controller.

2.4 MULTIPRESET MODULAR DIMMING CONTROLS

A. Description: Factory-fabricated equipment providing manual dimming consisting of the following:

1. Master controller.
2. Dimmer panels[**, and indicated number of zone stations**].
3. Controls and dimmers shall be integrated for mounting in a multigang wall box under a single wall plate.
4. Each zone shall be adjustable to indicated number of scenes, which shall reside in the memory of zone controller.

B. Dimmers:

1. Each zone shall be configurable to control the following loads:

   a. Fluorescent lamps with [**electronic**] [**magnetic**] ballasts.
   b. LED lamps.
   c. Incandescent lamps.
   d. Low-voltage incandescent lamps, derived with [**magnetic**] [**electronic**] transformers.
   e. Non-dim, on-off switching only.
   f. Neon and cold-cathode lighting.

2. Regulate voltages to maintain a constant light level, with no visible flicker, when the source voltage varies plus or minus 2 percent of rms voltage.

C. Memory: Retain preset scenes and fade settings through power failures by retaining physical settings of controls.

D. Device Plates: Style, material, and color [**shall comply with Section 262726 "Wiring Devices."**] Master-control cover plate shall be one piece.

E. Master controller shall include the following:

1. Wall-box style, single cover plate supplied by manufacturer.
2. Cover-mounted switches, including master off, all bright, and selectors for each scene.
3. Cover-mounted LED indicator lights, one associated with each scene switch, and one for the master off switch.
4. Concealed switches and indicators for specified function.
5. A raise/lower switch for each zone for temporary adjustments of the zone, without altering scene values stored in memory.
6. Fade time indicated by digital display for current scene while fading.
7. Cover-mounted infrared receiver.

F. Remote-Control Stations:

1. Numbered push buttons to select scenes.
2. Off switch to turn master station off.[**Operating the off switch at any remote station shall automatically turn on selected housekeeping lighting.**]
3. On switch turns all scenes of master station to full bright.
4. Control Wiring: NFPA 70, Class 2.
5. Mounting: Single flush wall box with manufacturer's [**standard faceplate**]

G. Infrared Remote-Control Station: Same functions as for standard remote-control station except that functions are input by a hand-held infrared transmitter. Operate up to 50 feet (15 m) within line of sight of the master controller.

H. Dimmer Panels: Modular, plug-in type, complying with UL 508.

1. Integrated Short-Circuit Rating: [**10 kA at 120 V**][**, 14 kA at 277 V**].
2. Dimmers:

a. Dimming Circuit: Two SCR dimmers, in inverse parallel configuration.
b. Dimming Curve: Modified "square law" as specified in IES's "Lighting Handbook;" control voltage is zero- to 10-V dc.
c. Dimming Range: Zero to 100 percent, full output voltage not less than 98 percent of line voltage.
d. Voltage Regulation: Dimmer shall maintain a constant light level, with no visible flicker, when the source voltage varies plus or minus 2 percent of rms voltage.

I. Circuit Breakers: Complying with UL 489 and classified as switch duty.

2.5 CONDUCTORS AND CABLES

A. Wiring to Supply Side of Remote-Control Power Sources: Not smaller than No. 12 AWG. Comply with requirements in Section 260519 "Low-Voltage Electrical Power Conductors and Cables."

B. Class 2 Control Cable: Multiconductor cable with stranded-copper conductors not smaller than [**No. 18**] [**No. 22**] [**No. 24**] AWG. Comply with requirements in Section 260519 "Low-Voltage Electrical Power Conductors and Cables."

PART 3 - EXECUTION

3.1 INSTALLATION OF WIRING

A. Comply with NECA 1.

B. Wiring Method: Comply with requirements in Section 260519 "Low-Voltage Electrical Power Conductors and Cables." Minimum conduit size shall be 1/2 inch (13 mm).

C. Wiring within Enclosures: Bundle, lace, and train conductors to terminal points. Separate power-limited and nonpower-limited conductors in accordance with conductor manufacturer's written instructions.

D. Size conductors in accordance with lighting control device manufacturer's written instructions unless otherwise indicated.

E. Splices, Taps, and Terminations: Make connections only on numbered terminal strips in junction, pull, and outlet boxes; terminal cabinets; and equipment enclosures.

3.2 IDENTIFICATION

A. Comply with requirements for identification specified in Section 260553 "Identification for Electrical Systems."

B. Label each dimmer module with a unique designation.

C. Label each scene control button with approved scene description.

3.3 FIELD QUALITY CONTROL

A. Testing Agency: [**Representative will engage**] [**Engage**] a qualified testing agency to perform tests and inspections.

B. Manufacturer's Field Service: Engage a factory-authorized service representative Company Service Advisor to test and inspect components, assemblies, and equipment installations, including connections.

C. Perform the following tests and inspections [**with the assistance of a factory-authorized service representative** Company Service Advisor]:

1. Continuity tests of circuits.
2. Operational Test: Set and operate controls to demonstrate their functions and capabilities in a methodical sequence that cues and reproduces actual operating functions.

    a. Include testing of modular dimming control equipment under conditions that simulate actual operational conditions. Record control settings, operations, cues, and functional observations.

D. Dimming control components will be considered defective if they do not pass tests and inspections.

E. Test Labeling: After satisfactory completion of tests and inspections, apply a label to tested components indicating test results, date, and responsible agency and representative.

F. Reports: Written reports of tests and observations. Record defective materials and workmanship and unsatisfactory test results. Record repairs and adjustments.

3.4 DEMONSTRATION

A. [**Engage a factory-authorized service representative** Company Service Advisor **to train**] [**Train**] Director’s Representative's maintenance personnel to adjust, operate, and maintain modular dimming controls. [**Laptop portable computer shall be used in training.**]

B. Coordinate demonstration of products specified in this Section with demonstration requirements for low-voltage, programmable lighting control system specified in construction documents.

END OF SECTION 260936

SECTION 262413

SWITCHBOARDS

PART 1 - GENERAL

1.1 RELATED DOCUMENTS

A. Drawings and general provisions of the Contract, including General and Supplementary Conditions and Division 01 Specification Sections, apply to this Section.

1.2 SUMMARY

A. Section Includes:

1. Service and distribution switchboards rated 600 V and less.
2. Surge protection devices.
3. Disconnecting and overcurrent protective devices.
4. Instrumentation.
5. Control power.
6. Accessory components and features.
7. Identification.
8. Mimic bus.

1.3 SUBMITTALS

A. Submittals for this section are subject to the re-evaluation fee identified in Article 4 of the General Conditions.

B. Manufacturer’s installation instructions shall be provided along with product data.

C. Submittals shall be provided in the order in which they are specified and tabbed (for combined submittals).

D. Product Data: For each switchboard, overcurrent protective device, surge protection device, ground-fault protector, accessory, and component.

1. Include dimensions and manufacturers' technical data on features, performance, electrical characteristics, ratings, accessories, and finishes.

E. Shop Drawings: For each switchboard and related equipment.

1. Include dimensioned plans, elevations, sections, and details, including required clearances and service space around equipment. Show tabulations of installed devices, equipment features, and ratings.
2. Detail enclosure types for types other than NEMA 250, Type 1.
3. Detail bus configuration, current, and voltage ratings.
4. Detail short-circuit current rating of switchboards and overcurrent protective devices.
5. Include descriptive documentation of optional barriers specified for electrical insulation and isolation.
6. Detail utility company's metering provisions with indication of approval by utility company.
7. Include evidence of NRTL listing for series rating of installed devices.
8. Detail features, characteristics, ratings, and factory settings of individual overcurrent protective devices and auxiliary components.

9. Include time-current coordination curves for each type and rating of overcurrent protective device included in switchboards. Submit on translucent log-log graft paper; include selectable ranges for each type of overcurrent protective device.
10. Include diagram and details of proposed mimic bus.
11. Include schematic and wiring diagrams for power, signal, and control wiring.

F. Samples: Representative portion of mimic bus with specified material and finish, for color selection.

G. Delegated Design Submittal:

1. For arc-flash hazard analysis.
2. For arc-flash labels.

H. Submittals for this section are subject to the re-evaluation fee identified in Article 4 of the General Conditions.

I. Qualification Data: For [**Installer**] [**testing agency**].

J. Seismic Qualification Data: Certificates, for switchboards, overcurrent protective devices, accessories, and components, from manufacturer.

1. Basis for Certification: Indicate whether withstand certification is based on actual test of assembled components or on calculation.
2. Dimensioned Outline Drawings of Equipment Unit: Identify center of gravity and locate and describe mounting and anchorage provisions.
3. Detailed description of equipment anchorage devices on which the certification is based and their installation requirements.

K. Field Quality-Control Reports:

1. Test procedures used.
2. Test results that comply with requirements.
3. Results of failed tests and corrective action taken to achieve test results that comply with requirements.

1.4 CLOSEOUT SUBMITTALS

A. Operation and Maintenance Data: For switchboards and components to include in emergency, operation, and maintenance manuals.

1. Include the following:

a. Routine maintenance requirements for switchboards and all installed components.
b. Manufacturer's written instructions for testing and adjusting overcurrent protective devices.
c. Time-current coordination curves for each type and rating of overcurrent protective device included in switchboards. Submit on translucent log-log graft paper; include selectable ranges for each type of overcurrent protective device.

1.5 MAINTENANCE MATERIAL SUBMITTALS

A. Furnish extra materials that match products installed and that are packaged with protective covering for storage and identified with labels describing contents.

1. Potential Transformer Fuses: Equal to 10 percent of quantity installed for each size and type but no fewer than two of each size and type.
2. Control-Power Fuses: Equal to 10 percent of quantity installed for each size and type, but no fewer than two of each size and type.

3. Fuses and Fusible Devices for Fused Circuit Breakers: Equal to 10 percent of quantity installed for each size and type but no fewer than three of each size and type.
4. Fuses for Fused Switches: Equal to 10 percent of quantity installed for each size and type but no fewer than three of each size and type.
5. Fuses for Fused Power-Circuit Devices: Equal to 10 percent of quantity installed for each size and type but no fewer than three of each size and type.
6. Indicating Lights: Equal to 10 percent of quantity installed for each size and type but no less than one of each size and type.

1.6 QUALITY ASSURANCE

A. Installer Qualifications: An employer of workers qualified as defined in NEMA PB 2.1 and trained in electrical safety as required by NFPA 70E.

B. Testing Agency Qualifications: Accredited by NETA.

1. Testing Agency's Field Supervisor: Certified by NETA to supervise on-site testing.

C. Equipment Qualifications For Products Other Than Those Specified:

1. At the time of submission provide written notice to the Director of the intent to propose an “approved equivalent” for products other than those specified. Make the “approved equivalent” submission in a timely manner to allow the Director sufficient time to review the proposed product, perform inspections and witness test demonstrations.
2. If products other than those specified are proposed for use furnish the name, address, and telephone numbers of at least 5 comparable installations that can prove the proposed products have performed satisfactorily for 3 years. Certify in writing that the Director’s Representative of the 5 comparable installations will allow inspection of their installation by the Director's Representative and the Company Field Advisor.

   a. Make arrangements with the Director’s Representative of 2 installations (selected by the Director) for inspection of the installations by the Director's Representative. Also obtain the services of the Company Field Advisor for the proposed products to be present. Notify the Director a minimum of 3 weeks prior to the availability of the installations for the inspection, and provide at least one alternative date for each inspection.
   b. Only references from the actual Director or Director’s Representative (Security Supervisor, Maintenance Supervisor, etc.) will be accepted. References from dealers, system installers or others, who are not the actual Director’s Representative of the proposed products, are not acceptable.

      1) Verify the accuracy of all references submitted prior to submission and certify in writing that the accuracy of the information has been confirmed.

3. The product manufacturer shall have test facilities available that can demonstrate that the proposed products meet the contract requirements.

   a. Make arrangements with the test facility for the Director's Representative to witness test demonstrations. Also obtain the services of the Company Field Advisor for the proposed product to be present at the test facility. Notify the Director a minimum of 3 weeks prior to the availability of the test facility, and provide at least one alternative date for the testing.

4. Provide written certification from the manufacturer that the proposed products are compatible for use with all other equipment proposed for use for this system and meet all contract requirements.

D. Company Field Advisor: Secure the services of a Company Field Advisor for a minimum of 8 working hours for the following:

1. Render advice regarding the switchboard unit substation installation, and final adjustment and testing of the switchboard unit substation devices.

2. Witness final system test and then certify with an affidavit that the switchboard unit substation is installed in accordance with the contract documents and is operating properly.
3. Train facility personnel on the operation and maintenance of the switchboard unit substation devices (minimum of two 1 hour sessions).
4. Explain available service programs to facility supervisory personnel for their consideration.

E. Service Availability: A fully equipped service organization shall be available to service the completed Work.

1.7 DELIVERY, STORAGE, AND HANDLING

A. Deliver switchboards in sections or lengths that can be moved past obstructions in delivery path.

B. Remove loose packing and flammable materials from inside switchboards and [**install temporary electric heating (250 W per section)**] [**connect factory-installed space heaters to temporary electrical service**] to prevent condensation.

C. Handle and prepare switchboards for installation according to [**NECA 400**] [**NEMA PB 2.1**].

1.8 FIELD CONDITIONS

A. Installation Pathway: Remove and replace access fencing, doors, lift-out panels, and structures to provide pathway for moving switchboards into place.

B. Environmental Limitations:

1. Do not deliver or install switchboards until spaces are enclosed and weathertight, wet work in spaces is complete and dry, work above switchboards is complete, and[**temporary**] HVAC system is operating and maintaining ambient temperature and humidity conditions at occupancy levels during the remainder of the construction period.
2. Rate equipment for continuous operation under the following conditions unless otherwise indicated:

   a. Ambient Temperature: Not exceeding 104 deg F.
   b. Altitude: Not exceeding 6600 feet.

C. Unusual Service Conditions: NEMA PB 2, as follows:

1. Ambient temperatures within limits specified.
2. Altitude not exceeding 6600 feet.

D. Interruption of Existing Electric Service: Do not interrupt electric service to facilities occupied by Director's Representative or others unless permitted under the following conditions and then only after arranging to provide temporary electric service according to requirements indicated:

1. Notify [**Architect**] [**Construction Manager**] [Owner**'s Representative**] no fewer than [**seven**] days in advance of proposed interruption of electric service.
2. Indicate method of providing temporary electric service.
3. Do not proceed with interruption of electric service without [**Architect's**] [**Construction Manager's**] [Owner**'s Representative's**] written permission.
4. Comply with NFPA 70E.

1.9 COORDINATION

A. Coordinate layout and installation of switchboards and components with other construction that penetrates walls or is supported by them, including electrical and other types of equipment, raceways, piping, encumbrances to workspace

clearance requirements, and adjacent surfaces. Maintain required workspace clearances and required clearances for equipment access doors and panels.

B. Coordinate sizes and locations of concrete bases with actual equipment provided. Cast anchor-bolt inserts into bases. Concrete, reinforcement, and formwork requirements are specified with concrete.

1.10 WARRANTY

A. Manufacturer's Warranty: Manufacturer agrees to repair or replace switchboard enclosures, buswork, overcurrent protective devices, accessories, and factory installed interconnection wiring that fail in materials or workmanship within specified warranty period.

1. Warranty Period: [**Three**] years from date of Substantial Completion.

B. Manufacturer's Warranty: Manufacturer's agrees to repair or replace surge protection devices that fail in materials or workmanship within specified warranty period.

1. Warranty Period: [**Five**] years from date of Substantial Completion.

PART 2 - PRODUCTS

2.1 PERFORMANCE REQUIREMENTS

A. Seismic Performance: Switchboards shall withstand the effects of earthquake motions determined according to [**ASCE/SEI 7**] .

1. Basis for Certification: Indicate whether withstand certification is based on actual test of assembled components or on calculation. Shake-table testing shall comply with ICC-ES AC156.
2. The term "withstand" means "the unit will remain in place without separation of any parts from the device when subjected to the seismic forces specified[**and the unit will be fully operational after the seismic event**]."

2.2 SWITCHBOARDS

A. Manufacturers: Subject to compliance with requirements, provide products by one of the following:

1. Eaton.
2. Schneider Electric USA (Square D).
3. Siemens Industry, Inc., Energy Management Division.
4. ABB
5. Approved equivalent.

B. Source Limitations: Obtain switchboards, overcurrent protective devices, components, and accessories from single source from single manufacturer.

C. Product Selection for Restricted Space: Drawings indicate maximum dimensions for switchboards including clearances between switchboards and adjacent surfaces and other items. Comply with indicated maximum dimensions.

D. Electrical Components, Devices, and Accessories: Listed and labeled as defined in NFPA 70, by a qualified testing agency, and marked for intended location and application.

E. Comply with NEMA PB 2.

F. Comply with NFPA 70.

G. Comply with UL 891.

H. Front-Connected, Front-Accessible Switchboards:

1. Main Devices: [**Panel**] [**Fixed, individually**] mounted.
2. Branch Devices: Panel mounted.
3. Sections front and rear aligned.

I. Front- and Side-Accessible Switchboards:

1. Main Devices: Fixed, individually mounted.
2. Branch Devices: Panel mounted.
3. Section Alignment: [**Front**] [**and**] [**Rear**] aligned.

J. Front- and Rear-Accessible Switchboards:

1. Main Devices: [**Fixed, individually**] [**Drawout**] mounted.
2. Branch Devices: [**Panel**] [**Fixed, individually**] [**Panel and fixed, individually**] [**Fixed and individually compartmented**] [**Individually compartmented and drawout**] mounted.
3. Sections [**front and rear**] [**rear**] aligned.

K. Nominal System Voltage:[**208Y/120 V**] .

L. Main-Bus Continuous: [**600**] A.

M. Seismic Requirements: Fabricate and test.

1. Basis for Certification: Indicate whether withstand certification is based on actual test of assembled components or on calculation. Shake-table testing shall comply with ICC-ES AC156.

   a. The term "withstand" means "the unit will remain in place without separation of any parts from the device when subjected to the seismic forces specified."
   b. The term "withstand" means "the unit will remain in place without separation of any parts from the device when subjected to the seismic forces specified and the unit will be fully operational after the seismic event."

N. Indoor Enclosures: Steel, NEMA 250, [**Type 1**] [**Type 2**].

O. Enclosure Finish for Indoor Units: Factory-applied finish in manufacturer's [**standard gray**] [**custom color**] finish over a rust-inhibiting primer on treated metal surface.

P. Outdoor Enclosures: [**Type 3R**] [**Type 3R, with interior-lighted walk-in aisle**].

1. Finish: Factory-applied finish in manufacturer's [**standard**] [**custom**] color; undersurfaces treated with corrosion-resistant undercoating.
2. Enclosure: [**Flat**] [**Downward, rearward sloping**] roof; [**bolt-on rear covers**] [**rear hinged doors**] for each section, with provisions for padlocking.
3. Doors: Personnel door at each end of aisle, minimum width of [**30 inches**] <**Insert value**>; opening outwards; with panic hardware and provisions for [**padlocking**] [**cylinder lock**]. At least one door shall be sized to permit the largest single switchboard section to pass through without disassembling doors, hinges, or switchboard section.
4. Accessories: LED luminaires, ceiling mounted; wired to a three-way light switch at each end of aisle; ground-fault circuit interrupter (GFCI) duplex receptacle; emergency battery pack luminaire installed on wall of aisle midway between personnel doors.
5. Walk-in Aisle Heating and Ventilating:

a. Factory-installed electric unit heater(s), wall or ceiling mounted, with integral thermostat and disconnect and with capacities to maintain switchboard interior temperature of [**40 deg F**] <**Insert temperature**> with outside design temperature of [**0 deg F**] <**Insert temperature**>.
b. Factory-installed exhaust fan with capacities to maintain switchboard interior temperature of [**100 deg F**] <**Insert temperature**> with outside design temperature of [**90 deg F**] <**Insert temperature**>.
c. Ventilating openings[**complete with replaceable fiberglass air filters**].
d. Thermostat: Single stage; wired to control heat and exhaust fan.

6. Power for Space Heaters, Ventilation, Lighting, and Receptacle: Include a control-power transformer, with spare capacity of 25 percent, within the switchboard. Supply voltage shall be [**120 V**] [**120/208 V**] ac.
7. Power for space heaters, ventilation, lighting, and receptacle provided by a remote source.

Q. Barriers: Between adjacent switchboard sections.

R. Insulation and isolation for[**main bus of main section and**] main and vertical buses of feeder sections.

S. Space Heaters: Factory-installed electric space heaters of sufficient wattage in each vertical section to maintain enclosure temperature above expected dew point.

1. Space-Heater Control: [**Thermostats to maintain temperature of each section above expected dew point**] [**Manual switching of branch-circuit protective device**].
2. Space-Heater Power Source: [**Transformer, factory installed in switchboard**] [**120-V external branch circuit**].

T. Service Entrance Rating: Switchboards intended for use as service entrance equipment shall contain from one to six service disconnecting means with overcurrent protection, a neutral bus with disconnecting link, a grounding electrode conductor terminal, and a main bonding jumper.

U. Utility Metering Compartment: Barrier compartment and section complying with utility company's requirements; hinged sealable door; buses provisioned for mounting utility company's current transformers and potential transformers or potential taps as required by utility company. If separate vertical section is required for utility metering, match and align with basic switchboard. Provide service entrance label and necessary applicable service entrance features.

V. Customer Metering Compartment: A separate customer metering compartment[**and section with front hinged door,**] and section with front hinged door, for indicated metering, and current transformers for each meter. Current transformer secondary wiring shall be terminated on shorting-type terminal blocks.[**Include potential transformers having primary and secondary fuses with disconnecting means and secondary wiring terminated on terminal blocks.**]

W. Bus Transition and Incoming Pull Sections: Matched and aligned with basic switchboard.

X. Removable, Hinged Rear Doors and Compartment Covers: Secured by [**captive thumb screws**] [**standard bolts**], for access to rear interior of switchboard.

Y. Hinged Front Panels: Allow access to circuit breaker, metering, accessory, and blank compartments.

Z. Pull Box on Top of Switchboard:

1. Adequate ventilation to maintain temperature in pull box within same limits as switchboard.
2. Set back from front to clear circuit-breaker removal mechanism.
3. Removable covers shall form top, front, and sides. Top covers at rear shall be easily removable for drilling and cutting.
4. Bottom shall be insulating, fire-resistive material with separate holes for cable drops into switchboard.
5. Cable supports shall be arranged to facilitate cabling and adequate to support cables indicated, including those for future installation.

AA. Buses and Connections: Three phase, four wire unless otherwise indicated.

1. Provide phase bus arrangement A, B, C from front to back, top to bottom, and left to right when viewed from the front of the switchboard.
2. Phase- and Neutral-Bus Material: Hard-drawn copper of 98 percent conductivity, [**silver-plated**].
3. Phase- and Neutral-Bus Material: Tin-plated, high-strength, electrical-grade aluminum alloy with tin-plated aluminum circuit-breaker line connections.
4. Copper feeder circuit-breaker line connections.
5. Tin-plated aluminum feeder circuit-breaker line connections.
6. Load Terminals: Insulated, rigidly braced, runback bus extensions, of same material as through buses, equipped with [**mechanical**] [**compression**] connectors for outgoing circuit conductors. Provide load terminals for future circuit-breaker positions at full-ampere rating of circuit-breaker position.
7. Ground Bus: [**1/4-by-2-inch-**] [**1/4-by-1-inch-**] [**Minimum-size required by UL 891,**] hard-drawn copper of 98 percent conductivity, equipped with [**mechanical**] [**compression**] connectors for feeder and branch-circuit ground conductors.
8. Main-Phase Buses and Equipment-Ground Buses: Uniform capacity for entire length of switchboard's main and distribution sections. Provide for future extensions from both ends.
9. Disconnect Links:

    a. Isolate neutral bus from incoming neutral conductors.
    b. Bond neutral bus to equipment-ground bus for switchboards utilized as service equipment or separately derived systems.

10. Neutral Buses: 50 percent of the ampacity of phase buses unless otherwise indicated, equipped with [**mechanical**] [**compression**] connectors for outgoing circuit neutral cables. Brace bus extensions for busway feeder neutral bus.
11. Neutral Buses: 100 percent of the ampacity of phase buses unless otherwise indicated, equipped with [**mechanical**] [**compression**] connectors for outgoing circuit neutral cables. Brace bus extensions for busway feeder neutral bus.
12. Isolation Barrier Access Provisions: Permit checking of bus-bolt tightness.

BB. Future Devices: Equip compartments with mounting brackets, supports, bus connections, and appurtenances at full rating of circuit-breaker compartment.

CC. Bus-Bar Insulation: Factory-applied, flame-retardant, tape wrapping of individual bus bars or flame-retardant, spray-applied insulation. Minimum insulation temperature rating of 105 deg C.

DD. Fungus Proofing: Permanent fungicidal treatment for overcurrent protective devices and other components including instruments and instrument transformers.

2.3 SURGE PROTECTION DEVICES

A. Manufacturers: Subject to compliance with requirements, provide products by one of the following:

1. Eaton.
2. Schneider Electric USA (Square D).
3. Siemens Industry, Inc., Energy Management Division.
4. Approved equivalent.

B. SPDs: Comply with UL 1449, [**Type 1**] [**Type 2**].

C. SPDs: Listed and labeled by an NRTL acceptable to authorities having jurisdiction as complying with UL 1449, [**Type 1**] [**Type 2**].

D. Features and Accessories:

1. Integral disconnect switch.
2. Internal thermal protection that disconnects the SPD before damaging internal suppressor components.
3. Indicator light display for protection status.

4. Form-C contacts rated at [**5 A and 250-V ac**] [**2 A and 24-V ac**] <**Insert values**>, one normally open and one normally closed, for remote monitoring of protection status.[**Contacts shall reverse on failure of any surge diversion module or on opening of any current-limiting device. Coordinate with building power monitoring and control system.**]
5. Surge counter.

E. Peak Surge Current Rating: The minimum single-pulse surge current withstand rating per phase shall not be less than [**200 kA**] . The peak surge current rating shall be the arithmetic sum of the ratings of the individual MOVs in a given mode.

F. Protection modes and UL 1449 VPR for grounded wye circuits with [**208Y/120 V**], three-phase, four-wire circuits shall not exceed the following:

1. Line to Neutral: [**700 V for 208Y/120 V**].
2. Line to Ground: [**1200 V for 208Y/120 V**].
3. Line to Line: [**1000 V for 208Y/120 V**].

G. Protection modes and UL 1449 VPR for 240/120 V, single-phase, three-wire circuits shall not exceed the following:

1. Line to Neutral: 700 V.
2. Line to Ground: [**700 V**] [**1000 V**].
3. Line to Line: 1000 V.

H. SCCR: Equal or exceed [**200 kA**] .

I. Nominal Rating: 20 kA.

2.4 DISCONNECTING AND OVERCURRENT PROTECTIVE DEVICES

A. Molded-Case Circuit Breaker (MCCB): Comply with UL 489, with [**series-connected rating**] [**interrupting capacity**] to meet available fault currents.

1. Thermal-Magnetic Circuit Breakers: Inverse time-current element for low-level overloads and instantaneous magnetic trip element for short circuits. Adjustable magnetic trip setting for circuit-breaker frame sizes 250 A and larger.
2. Adjustable Instantaneous-Trip Circuit Breakers: Magnetic trip element with front-mounted, field-adjustable trip setting.
3. Electronic trip circuit breakers with rms sensing; field-replaceable rating plug or field-replicable electronic trip; and the following field-adjustable settings:

    a. Instantaneous trip.
    b. Long- and short-time pickup levels.
    c. Long and short time adjustments.
    d. Ground-fault pickup level, time delay, and I squared t response.

4. Current-Limiting Circuit Breakers: Frame sizes 400 A and smaller; let-through ratings less than NEMA FU 1, RK-5.
5. Integrally Fused Circuit Breakers: Thermal-magnetic trip element with integral limiter-style fuse listed for use with circuit breaker; trip activation on fuse opening or on opening of fuse compartment door.
6. GFCI Circuit Breakers: Single- and double-pole configurations with Class A ground-fault protection (6-mA trip).
7. Ground-Fault Equipment Protection (GFEP) Circuit Breakers: Class B ground-fault protection (30-mA trip).
8. MCCB Features and Accessories:

    a. Standard frame sizes, trip ratings, and number of poles.
    b. Lugs: [**Compression**] style, suitable for number, size, trip ratings, and conductor material.

c. Application Listing: Appropriate for application; Type SWD for switching fluorescent lighting loads; Type HID for feeding fluorescent and high-intensity discharge (HID) lighting circuits.
d. Ground-Fault Protection: [**Integrally mounted**] [**Remote-mounted**] relay and trip unit with adjustable pickup and time-delay settings, push-to-test feature, and ground-fault indicator.
e. Zone-Selective Interlocking: Integral with electronic trip unit; for interlocking ground-fault protection function.
f. Shunt Trip: 120-V trip coil energized from separate circuit, set to trip at [**55**] [**75**] percent of rated voltage.
g. Undervoltage Trip: Set to operate at 35 to 75 percent of rated voltage without intentional time delay.
h. Auxiliary Contacts: [**One SPDT switch**] [**Two SPDT switches**] with "a" and "b" contacts; "a" contacts mimic circuit-breaker contacts, "b" contacts operate in reverse of circuit-breaker contacts.
i. Key Interlock Kit: Externally mounted to prohibit circuit-breaker operation; key shall be removable only when circuit breaker is in off position.

B. Insulated-Case Circuit Breaker (ICCB): [**80**] [**100**] percent rated, sealed, insulated-case power circuit breaker with interrupting capacity rating to meet available fault current.

1. [**Fixed**] [**Drawout**] circuit-breaker mounting.
2. Two-step, stored-energy closing.
3. [**Standard**] [**Full**]-function, microprocessor-based trip units with interchangeable rating plug, trip indicators, and the following field-adjustable settings:

a. Instantaneous trip.
b. Time adjustments for long- and short-time pickup.
c. Ground-fault pickup level, time delay, and I squared t response.

4. Zone-Selective Interlocking: Integral with electronic trip unit; for interlocking ground-fault protection function.
5. Remote trip indication and control.
6. Communication Capability: Web enabled integral Ethernet communication module and embedded Web server with factory-configured Web pages (HTML file format).
7. Key Interlock Kit: Externally mounted to prohibit circuit-breaker operation; key shall be removable only when circuit breaker is in off position.
8. Control Voltage: [**40-V dc**] [**125-V dc**] [**250-V dc**] [**120-V ac**].

C. Bolted-Pressure Contact Switch: Operating mechanism uses rotary-mechanical-bolting action to produce and maintain high clamping pressure on the switch blade after it engages the stationary contacts.

1. Manufacturers: Subject to compliance with requirements, available manufacturers offering products that may be incorporated into the Work include, but are not limited to the following:

a. Eaton.
b. Schneider Electric USA (Square D).
c. Siemens Industry, Inc., Energy Management Division.
d. Approved equivalent.

2. Main-Contact Interrupting Capability: Minimum of 12 times the switch current rating.
3. Operating Mechanism: Manual handle operation to close switch; stores energy in mechanism for opening and closing.

a. Electrical Trip: Operation of lever or push-button trip switch, or trip signal from ground-fault relay or remote-control device, causes switch to open.
b. Mechanical Trip: Operation of mechanical lever, push button, or other device causes switch to open.

4. Auxiliary Switches: Factory installed, SPDT, with leads connected to terminal block, and including one set more than quantity required for functional performance indicated.
5. Service-Rated Switches: Labeled for use as service equipment.
6. Ground-Fault Relay: Comply with UL 1053; self-powered type with mechanical ground-fault indicator, test function, tripping relay with internal memory, and three-phase current transformer/sensor.

a. Configuration: [**Integrally mounted**] [**Remote-mounted**] relay and trip unit with adjustable pickup and time-delay settings, push-to-test feature, and ground-fault indicator.
b. Internal Memory: Integrates the cumulative value of intermittent arcing ground-fault currents and uses the effect to initiate tripping.
c. No-Trip Relay Test: Permits ground-fault simulation test without tripping switch.
d. Test Control: Simulates ground fault to test relay and switch (or relay only if "no-trip" mode is selected).

7. Open-Fuse Trip Device: Arranged to trip switch open if a phase fuse opens.

D. High-Pressure, Butt-Type Contact Switch: Operating mechanism uses butt-type contacts and a spring-charged mechanism to produce and maintain high-pressure contact when switch is closed.

1. Manufacturers: Subject to compliance with requirements, [provide products by the following] [provide products by one of the following] [available manufacturers offering products that may be incorporated into the Work include, but are not limited to, the following]:

a. Eaton.
b. GE (General Electric).
c. Approved equivalent.

2. Main-Contact Interrupting Capability: Minimum of 12 times the switch current rating.
3. Operating Mechanism: Manual handle operation to close switch; stores energy in mechanism for opening and closing.

a. Electrical Trip: Operation of lever or push-button trip switch, or trip signal from ground-fault relay or remote-control device, causes switch to open.
b. Mechanical Trip: Operation of mechanical lever, push button, or other device causes switch to open.

4. Auxiliary Switches: Factory installed, SPDT, with leads connected to terminal block, and including one set more than quantity required for functional performance indicated.
5. Service-Rated Switches: Labeled for use as service equipment.
6. Ground-Fault Relay: Comply with UL 1053; self-powered type with mechanical ground-fault indicator, test function, tripping relay with internal memory, and three-phase current transformer/sensor.

a. Configuration: [**Integrally mounted**] [**Remote-mounted**] relay and trip unit with adjustable pickup and time-delay settings, push-to-test feature, and ground-fault indicator.
b. Internal Memory: Integrates the cumulative value of intermittent arcing ground-fault currents and uses the effect to initiate tripping.
c. No-Trip Relay Test: Permits ground-fault simulation test without tripping switch.
d. Test Control: Simulates ground fault to test relay and switch (or relay only if "no-trip" mode is selected).

7. Open-Fuse Trip Device: Arranged to trip switch open if a phase fuse opens.

E. Fused Switch: NEMA KS 1, Type HD; clips to accommodate specified fuses; lockable handle.

2.5 INSTRUMENTATION

A. Instrument Transformers: NEMA EI 21.1, and the following:

1. Potential Transformers: NEMA EI 21.1; 120 V, 60 Hz, [**single**] [**tapped**] [**double**] secondary; disconnecting type with integral fuse mountings. Burden and accuracy shall be consistent with connected metering and relay devices.

2. Current Transformers: NEMA EI 21.1; 5 A, 60 Hz, secondary; [**wound**] [**bushing**] [**bar or window**] type; [**single**] [**double**] secondary winding and secondary shorting device. Burden and accuracy shall be consistent with connected metering and relay devices.
3. Control-Power Transformers: Dry type, mounted in separate compartments for units larger than 3 kVA.
4. Current Transformers for Neutral and Ground-Fault Current Sensing: Connect secondary wiring to ground overcurrent relays, via shorting terminals, to provide selective tripping of main and tie circuit breaker. Coordinate with feeder circuit-breaker, ground-fault protection.

B. Multifunction Digital-Metering Monitor: Microprocessor-based unit suitable for three- or four-wire systems and with the following features:

1. Switch-selectable digital display of the following values with maximum accuracy tolerances as indicated:

a. Phase Currents, Each Phase: Plus or minus 0.5 percent.
b. Phase-to-Phase Voltages, Three Phase: Plus or minus 0.5 percent.
c. Phase-to-Neutral Voltages, Three Phase: Plus or minus 0.5 percent.
d. Megawatts: Plus or minus 1 percent.
e. Megavars: Plus or minus 1 percent.
f. Power Factor: Plus or minus 1 percent.
g. Frequency: Plus or minus 0.1 percent.
h. Accumulated Energy, Megawatt Hours: Plus or minus 1 percent; accumulated values unaffected by power outages up to 72 hours.
i. Megawatt Demand: Plus or minus 1 percent; demand interval programmable from five to 60 minutes.
j. Contact devices to operate remote impulse-totalizing demand meter.

2. Mounting: Display and control unit flush or semiflush mounted in instrument compartment door.

C. Analog Meters:

1. Meters: 4-inch diameter or 6 inches square, flush or semiflush, with anti-parallax 250-degree scales and external zero adjustment.

D. Voltmeters: Cover an expanded-scale range of nominal voltage plus 10 percent.

E. Instrument Switches: Rotary type with off position.

1. Voltmeter Switches: Permit reading of all phase-to-phase voltages and, where a neutral is indicated, phase-to-neutral voltages.
2. Ammeter Switches: Permit reading of current in each phase and maintain current-transformer secondaries in a closed-circuit condition at all times.

F. Ammeters: 2-1/2-inch minimum size with 90- or 120-degree scale. Meter and transfer device with off position, located on overcurrent device door for indicated feeder circuits only.

G. Watt-Hour Meters and Wattmeters:

1. Comply with ANSI C12.1.
2. Three-phase induction type with two stators, each with current and potential coil, rated 5 A, 120 V, 60 Hz.
3. Suitable for connection to three- and four-wire circuits.
4. Potential indicating lamps.
5. Adjustments for light and full load, phase balance, and power factor.
6. Four-dial clock register.
7. Integral demand indicator.
8. Contact devices to operate remote impulse-totalizing demand meter.
9. Ratchets to prevent reverse rotation.
10. Removable meter with drawout test plug.
11. Semiflush mounted case with matching cover.
12. Appropriate multiplier tag.

H. Impulse-Totalizing Demand Meter:

1. Comply with ANSI C12.1.
2. Suitable for use with switchboard watt-hour meter, including two-circuit totalizing relay.
3. Cyclometer.
4. Four-dial, totalizing kilowatt-hour register.
5. Positive chart drive mechanism.
6. Capillary pen holding a minimum of one month's ink supply.
7. Roll chart with minimum 31-day capacity; appropriate multiplier tag.
8. Capable of indicating and recording [**five**] [**15**] [**30**] <**Insert time period**>-minute integrated demand of totalized system.

2.6 CONTROL POWER

A. Control Circuits: 120-V ac, supplied through secondary disconnecting devices from control-power transformer.

B. Control Circuits: 120-V ac, supplied from remote branch circuit.

C. Control Circuits: <**Insert control voltage**>-V dc.

D. Electrically Interlocked Main and Tie Circuit Breakers: Two control-power transformers in separate compartments, with interlocking relays, connected to the primary side of each control-power transformer at the line side of the associated main circuit breaker. 120-V secondaries connected through automatic transfer relays to ensure a fail-safe automatic transfer scheme.

E. Control-Power Fuses: Primary and secondary fuses for current-limiting and overload protection of transformer and fuses for protection of control circuits.

F. Control Wiring: Factory installed, with bundling, lacing, and protection included. Provide flexible conductors for No. 8 AWG and smaller, for conductors across hinges, and for conductors for interconnections between shipping units.

2.7 ACCESSORY COMPONENTS AND FEATURES

A. Accessory Set: Include tools and miscellaneous items required for overcurrent protective device test, inspection, maintenance, and operation.

B. Portable Test Set: For testing functions of solid-state trip devices without removing from switchboard. Include relay and meter test plugs suitable for testing switchboard meters and switchboard class relays.

C. Portable Circuit-Breaker Lifting Device: Floor-supported, roller-based, elevating carriage arranged for movement of circuit breakers in and out of compartments for present and future circuit breakers.

D. Overhead Circuit-Breaker Lifting Device: Mounted at top front of switchboard, with hoist and lifting yokes matching each drawout circuit breaker.

E. Spare-Fuse Cabinet: Suitably identified, wall-mounted, lockable, compartmented steel box or cabinet. Arrange for wall mounting.

F. Mounting Accessories: For anchors, mounting channels, bolts, washers, and other mounting accessories.

2.8 IDENTIFICATION

A. Mimic Bus: Entire single-line switchboard bus work, as depicted on factory record drawing, on a photoengraved nameplate.

1. Nameplate: At least 0.032-inch- thick anodized aluminum, located at eye level on front cover of the switchboard incoming service section.

B. Mimic Bus: Entire single-line switchboard bus work, as depicted on factory record drawing, on an engraved laminated-plastic (Gravoply) nameplate.

1. Nameplate: At least 0.0625-inch- thick laminated plastic (Gravoply), located at eye level on front cover of the switchboard incoming service section.

C. Mimic Bus: Continuously integrated mimic bus factory applied to front of switchboard. Arrange in single-line diagram format, using symbols and letter designations consistent with final mimic-bus diagram.

D. Coordinate mimic-bus segments with devices in switchboard sections to which they are applied. Produce a concise visual presentation of principal switchboard components and connections.

E. Presentation Media: Painted graphics in color contrasting with background color to represent bus and components, complete with lettered designations.

F. Service Equipment Label: NRTL labeled for use as service equipment for switchboards with one or more service disconnecting and overcurrent protective devices.

PART 3 - EXECUTION

3.1 EXAMINATION

A. Receive, inspect, handle, and store switchboards according to [**NECA 400**] [**NEMA PB 2.1**].

1. Lift or move panelboards with spreader bars and manufacturer-supplied lifting straps following manufacturer's instructions.
2. Use rollers, slings, or other manufacturer-approved methods if lifting straps are not furnished.
3. Protect from moisture, dust, dirt, and debris during storage and installation.
4. Install temporary heating during storage per manufacturer's instructions.

B. Examine switchboards before installation. Reject switchboards that are moisture damaged or physically damaged.

C. Examine elements and surfaces to receive switchboards for compliance with installation tolerances and other conditions affecting performance of the Work or that affect the performance of the equipment.

D. Proceed with installation only after unsatisfactory conditions have been corrected.

3.2 INSTALLATION

A. Install switchboards and accessories according to [**NECA 400**] [**NEMA PB 2.1**].

B. Equipment Mounting: Install switchboards on concrete base, 4-inch nominal thickness.

1. Install conduits entering underneath the switchboard, entering under the vertical section where the conductors will terminate. Install with couplings flush with the concrete base. Extend 2 inches above concrete base after switchboard is anchored in place.

2. Install dowel rods to connect concrete base to concrete floor. Unless otherwise indicated, install dowel rods on 18-inch centers around the full perimeter of concrete base.
3. For supported equipment, install epoxy-coated anchor bolts that extend through concrete base and anchor into structural concrete floor.
4. Place and secure anchorage devices. Use setting drawings, templates, diagrams, instructions, and directions furnished with items to be embedded.
5. Install anchor bolts to elevations required for proper attachment to switchboards.
6. Anchor switchboard to building structure at the top of the switchboard if required or recommended by the manufacturer.

C. Temporary Lifting Provisions: Remove temporary lifting eyes, channels, straps and brackets, and temporary blocking of moving parts from switchboard units and components.

D. Operating Instructions: Frame and mount the printed basic operating instructions for switchboards, including control and key interlocking sequences and emergency procedures. Fabricate frame of finished wood or metal and cover instructions with clear acrylic plastic. Mount on front of switchboards.

E. Install filler plates in unused spaces of panel-mounted sections.

F. Install overcurrent protective devices, surge protection devices, and instrumentation.

1. Set field-adjustable switches and circuit-breaker trip ranges.

G. Install spare-fuse cabinet.

H. Comply with NECA 1.

3.3 CONNECTIONS

A. Bond conduits entering underneath the switchboard to the equipment ground bus with a bonding conductor sized per NFPA 70.

B. Support and secure conductors within the switchboard according to NFPA 70.

C. Extend insulated equipment grounding cable to busway ground connection and support cable at intervals in vertical run.

3.4 FIELD QUALITY CONTROL

A. Testing Agency: Director’s Representative will engage a qualified testing agency to perform tests and inspections.

B. Testing Agency: Engage a qualified testing agency to perform tests and inspections.

C. Manufacturer's Field Service: Engage a Company Service Advisor to test and inspect components, assemblies, and equipment installations, including connections.

D. Perform tests and inspections[**with the assistance of a Company Service Advisor**].

E. Tests and Inspections:

1. Acceptance Testing:

a. Test insulation resistance for each switchboard bus, component, connecting supply, feeder, and control circuit. Open control and metering circuits within the switchboard, and remove neutral connection to surge protection and other electronic devices prior to insulation test. Reconnect after test.

b. Test continuity of each circuit.

2. Test ground-fault protection of equipment for service equipment per NFPA 70.
3. Perform each visual and mechanical inspection and electrical test stated in NETA Acceptance Testing Specification. Certify compliance with test parameters.
4. Correct malfunctioning units on-site where possible, and retest to demonstrate compliance; otherwise, replace with new units and retest.
5. Perform the following infrared scan tests and inspections, and prepare reports:

   a. Initial Infrared Scanning: After Substantial Completion, but not more than 60 days after Final Acceptance, perform an infrared scan of each switchboard. Remove [**front**] [**front and rear**] panels so joints and connections are accessible to portable scanner.
   b. Follow-up Infrared Scanning: Perform an additional follow-up infrared scan of each switchboard 11 months after date of Substantial Completion.
   c. Instruments and Equipment:

      1) Use an infrared scanning device designed to measure temperature or to detect significant deviations from normal values. Provide calibration record for device.

6. Test and adjust controls, remote monitoring, and safeties. Replace damaged and malfunctioning controls and equipment.

F. Switchboard will be considered defective if it does not pass tests and inspections.

G. Prepare test and inspection reports, including a certified report that identifies switchboards included and that describes scanning results. Include notation of deficiencies detected, remedial action taken, and observations after remedial action.

3.5 ADJUSTING

A. Adjust moving parts and operable components to function smoothly, and lubricate as recommended by manufacturer.

3.6 PROTECTION

A. Temporary Heating: Apply temporary heat, to maintain temperature according to manufacturer's written instructions, until switchboard is ready to be energized and placed into service.

3.7 DEMONSTRATION

A. [**Engage a Company Service Advisor to train**] [**Train**] Director’s Representative's maintenance personnel to adjust, operate, and maintain switchboards, overcurrent protective devices, instrumentation, and accessories[**, and to use and reprogram microprocessor-based trip, monitoring, and communication units**].

END OF SECTION 262413

SECTION 262416

PANELBOARDS

PART 1 - GENERAL

1.1 SUMMARY

A. Section Includes:

1. Panelboards.
2. Disconnecting and overcurrent protective devices.

B. Products Installed, but Not Furnished, under This Section:

C. Related Requirements:

1. Section 018116 "Facility Environmental Requirements" specifies temperature, humidity, acoustical, and other field conditions applicable to the Work specified in this Section.
2. Section 018123 "Facility Seismic and Wind Criteria" specifies seismic hazard, wind hazard, other structural design conditions applicable to the Work specified in this Section.
3. Section 260010 "Supplemental Requirements for Electrical" specifies additional abbreviations, definitions, submittals, qualifications, testing agencies, and other requirements applicable to the Work for electrical, communications, and electronic safety and security systems on Project, including wiring methods.
4. Section 260529 "Hangers and Supports for Electrical Systems" specifies concrete bases and supports for panelboards installed by this Section.
5. Section 260548 "Vibration and Seismic Controls for Electrical Systems" specifies seismic control devices, mounting devices, and anchoring devices installed by this Section.
6. Section 260553 "Identification for Electrical Systems" specifies electrical equipment labels and warning signs installed by this Section.
7. Section 260573 "Power System Studies" specifies short-circuit current studies, overcurrent protective device coordination studies, and arc-flash hazard analysis studies.
8. Section 260913 "Electrical Power Monitoring" specifies power monitoring and control systems installed by this Section.
9. Section 262813 "Fuses" specifies fuses and spare-fuse cabinets installed by this Section.
10. Section 264313 "Surge Protective Devices for Low-Voltage Electrical Power Circuits" specifies Type 1 and Type 2 surge protective devices installed by this Section.
11. Section 262417 “Panelboards for Existing Cabinets” specifies Panelboards and sizing requirements for using existing Panelboard Cabinets.

1.2 DEFINITIONS

A. MCCB: Molded-case circuit breaker.

B. VPR: Voltage protection rating.

1.3 ACTION SUBMITTALS

A. Product Data: For each type of product. In addition to information identified in Section 013300 "Submittal Procedures," submit the following:

1. Product Listing: Include copy of unexpired approval letter, on letterhead of qualified electrical testing agency, certifying product's compliance with specified listing criteria.
2. Include manufacturer's sample extended warranty language.

B. Shop Drawings: For each panelboard and relatedequipment:

1. Include dimensioned plans, elevations, sections, anddetails.
2. Show tabulations of installed devices with nameplates, conductor termination sizes, equipment features, and ratings.
3. Detail enclosure types including mounting and anchorage, environmental protection, knockouts, corner treatments, covers and doors, gaskets, hinges, and locks.
4. Detail bus configuration, current, and voltageratings.
5. Short-circuit current rating of panelboards and overcurrent protective devices.
6. Includeevidence of listing, by qualified electrical testing laboratory recognized by authorities having jurisdiction, for series rating of installed devices.
7. Includeevidence of listing, by qualified electrical testing laboratory recognized by authorities having jurisdiction, for SPD as installed inpanelboard.
8. Detail features, characteristics, ratings, and factory settings of individual overcurrent protective devices and auxiliary components.
9. Include wiring diagrams for power, signal, and control wiring.
10. Key interlock scheme drawing and sequence of operations.
11. Include time-current coordination curves for each type and rating of overcurrent protective device included in panelboards. Submit on translucent log-log graft paper; include selectable ranges for each type of overcurrent protective device. Include Internet link for electronic access to downloadable PDF of coordination curves.

C. Field quality-control reports.

1.4 INFORMATIONAL SUBMITTALS

A. Panelboard Schedules: For installation in panelboards.[**Submit final versions after load balancing.**]

B. Submittals Package: Submit the shop drawings, and the product data specified below at the same time as a package.

C. Shop Drawings; include the following for each panelboard:

1. Detail for installation of panelboard when using in existing cabinet including verification of size and spacing requirements of panelboard in existing cabinet.
2. Voltage and current rating.
3. Panelboard short circuit rating. Indicate if rating is Fully Rated Equipment Rating, or where acceptable, UL listed Integrated Equipment Short Circuit Rating.
4. Circuit breaker enumeration (frame, ATE, poles, I.C.).

   a. Indicate if circuit breakers are suitable for the panelboards' Fully Rated Equipment Rating, or where acceptable, are series connected devices which have been test verified and listed with UL (include documentation proving the compatibility of the proposed circuit breaker combinations). Circuit breakers do not have to be listed as series connected devices when all of the circuit breaker interrupting ratings are equal to, or greater than, the short circuit rating of the panelboard.

5. Accessories.

D. Manufacturer's published instructions.

E. Field Reports:

1. Manufacturer's field reports for field quality-controlsupport.
2. Field reports for voltage monitoring andadjusting.
3. Field reports for infrared scanning.

1.5 CLOSEOUT SUBMITTALS

A. Operation and Maintenance Data: Deliver 2 copies, covering the installed products, to the Director's Representative.

B. Warranty documentation.

1.6 MAINTENANCE MATERIAL SUBMITTALS

A. Spare parts.

B. Special tools.

1.7 QUALIFICATIONS

A. Low-Voltage Electrical Testing and Inspecting Agency: Entities possessing active credentials from a qualified electrical testing laboratory recognized by authorities having jurisdiction.

1. On-site electrical testing supervisors must have documented certification and experience with testing electrical equipment in accordance with NETA testing standards.

B. Quality Control Submittals:

1. List of Completed Installations: If brand names other than those specified are proposed for use, furnish the name, address, and telephone number of at least 5 comparable installations that can prove the proposed products have operated satisfactorily for one year.
2. Company Field Advisor Data: Include:

a. Name, business address and telephone number of Company Field Advisor secured for the required services.
b. Certified statement from the Company listing the qualifications of the Company Field Advisor.
c. Services and each product for which authorization is given by the Company listed specifically for this project.

C. Contract Closeout Submittals:

1. System acceptance test report.
2. Certificate: Affidavit, signed by the Company Field Advisor and notarized, certifying that the system meets the contract requirements and is operating properly.
3. Operation and Maintenance Data: Deliver 2 copies, covering the installed products, to the Director's Representative.

1.8 DELIVERY, STORAGE, AND HANDLING

A. Remove loose packing and flammable materials from inside panelboards; install temporary electric heating (250 W per panelboard) to prevent condensation.

B. Handle and prepare panelboards for installation in accordance with [**NECA 407**] [**NEMA PB 1**].

1.9 WARRANTY

A. Special Installer Extended Warranty: Installer warrants that fabricated and installed panelboards perform in accordance with specified requirements and agrees to repair or replace components or products that fail to perform as specified within extended-warranty period.

1. Extended-Warranty Period: [**Two**] years from date of Substantial Completion; full coverage for labor, materials, and equipment.

B. B. Special Manufacturer Extended Warranty: Manufacturer warrants that panelboards perform in accordance with specified requirements and agrees to provide repair or replacement of components or products that fail to perform as specified within extended-warranty period.

1. Initial Extended-Warranty Period: [**Three**] years from date of Substantial Completion; [**full**] [**prorated**] coverage for labor, materials, and equipment.

2. Follow-On Extended-Warranty Period: [**Five**] years from date of Substantial Completion; [**full**] [**prorated**] coverage for materials[**that failed because of transient voltage surges**] only, free on board [**origin**] [**destination**], freight prepaid.

PART 2 - PRODUCTS

2.1 EXISTING PRODUCTS TO BE MODIFIED

A. Refer to construction drawings. Provide main circuit breakers that are compatible with existing panelboards.

B. Conduct amprobe readings before and after installations to determine loads do not exceed 80% of the main circuit breaker capacity.

2.2 EXISTING PRODUCTS TO BE REMOVED AND REINSTALLED

A. Refer to construction documents. Provide main circuit breakers that are compatible with existing panelboards.

B. Conduct amprobe readings before and after installations to determine loads do not exceed 80% of the main circuit breaker capacity.

2.3 PERFORMANCE REQUIREMENTS

A. Regulatory Requirements: Products or components listed and labeled in accordance with NFPA 70, by qualified electrical testing laboratory recognized by authorities having jurisdiction, and marked for intended location and application.

B. Fabricate and test panelboards in accordance with IEEE 344 to withstand seismic forces specified in Section 018123 "Facility Seismic and Wind Criteria."

C. Product Selection for Restricted Space: Drawings indicate maximum dimensions for panelboards including clearances between panelboards and adjacent surfaces and other items. Comply with indicated maximum dimensions.

D. Comply with NEMA PB 1.

E. Enclosures: [**Flush**] [**and**] [**Surface**]-mounted, dead-front cabinets.

1. Rated for environmental conditions at installed location.

a. Indoor Dry and Clean Locations: UL 50E, [**Type 1**] <**Insert type**>.
b. Outdoor Locations: UL 50E, [**Type 3R**] <**Insert type**>.
c. Kitchen and Wash-Down Areas: UL 50E, [**Type 4X**] <**Insert type**>, [**stainless steel]<Insert material>.**
d. Other Wet or Damp Indoor Locations: UL 50E, [**Type 4**] <**Insert type**>.
e. Indoor Locations Subject to Dust, Falling Dirt, and Dripping Noncorrosive Liquids: UL 50E, [**Type 5**] [**Type 12**].

2. Height: 7 ft (2.13 m) maximum.
3. Front: Secured to box with concealed trim clamps. For surface-mounted fronts, match box dimensions; for flush-mounted fronts, overlap box. Trims must cover live parts and may have no exposed hardware.
4. Hinged Front Cover: Entire front trim hinged to box and with standard door within hinged trim cover. Trims must cover live parts and may have no exposed hardware.
5. Skirt for Surface-Mounted Panelboards: Same gage and finish as panelboard front with flanges for attachment to panelboard, wall, and ceiling or floor.
6. Gutter Extension and Barrier: Same gage and finish as panelboard enclosure; integral with enclosure body. Arrange to isolate individual panel sections.
7. Finishes:

    a. Panels and Trim: [**Steel**] [**and**] [**galvanized steel**], factory finished immediately after cleaning and pretreating with manufacturer's standard two-coat, baked-on finish consisting of prime coat and thermosetting topcoat.
    b. Back Boxes: [**Galvanized steel**] [**Same finish as panels and trim**].
    c. Fungus Proofing: Permanent fungicidal treatment for overcurrent protective devices and other components.

F. Phase, Neutral, and Ground Buses:

1. Material: [Tin-plated aluminum] [Hard-drawn copper, 98 percent conductivity].

    a. Plating must run entire length of bus.
    b. Bus must be fully rated for entire length.

2. Interiors must be factory assembled into unit. Replacing switching and protective devices may not disturb adjacent units or require removing main bus connectors.
3. Equipment Ground Bus: Adequate for feeder and branch-circuit equipment grounding conductors; bonded to box.

G. Conductor Connectors: Suitable for use with conductor material and sizes.

1. Material: **[[Hard-drawn copper, 98 percent conductivity].**
2. Terminations must allow use of 75 deg C rated conductors without derating.
3. Size: Lugs suitable for indicated conductor sizes, with additional gutter space, if required, for larger conductors.
4. Main and Neutral Lugs**: [Compression]** type, with lug on neutral bar for each pole in panelboard.
5. Ground Lugs and Bus-Configured Terminators: [**Compression**] type, with lug on bar for each pole in panelboard.

H. Quality-Control Label: Panelboards or load centers must be labeled, by qualified electrical testing laboratory recognized by authorities having jurisdiction, for use as service equipment with one or more main service disconnecting and overcurrent protective devices. Panelboards or load centers must have meter enclosures, wiring, connections, and other provisions for utility metering. Coordinate with utility company for exact requirements.

I. Future Devices: Panelboards or load centers must have mounting brackets, bus connections, filler plates, and necessary appurtenances required for future installation of devices.

1. Percentage of Future Space Capacity: [**20**] percent.

J. Panelboard Short-Circuit Current Rating:

1. Rated for series-connected system with integral or remote upstream overcurrent protective devices and labeled by qualified electrical testing laboratory recognized by authorities having jurisdiction. Include label or manual with size and type of allowable upstream and branch devices listed and labeled, by qualified electrical testing laboratory recognized by authorities having jurisdiction, for series-connected short-circuit rating.

    a. Panelboards rated 240 V or less must have short-circuit ratings as shown on Drawings, but not less than 10 000 A(rms) symmetrical.

b. Panelboards rated above 240 V and less than 600 V must have short-circuit ratings as shown on Drawings, but not less than 14 000 A(rms) symmetrical.

2. Fully rated to interrupt symmetrical short-circuit current available at terminals. Assembly listed, by qualified electrical testing laboratory recognized by authorities having jurisdiction, for 100 percent interrupting capacity.

a. Panelboards and overcurrent protective devices rated 240 V or less must have short- circuit ratings as shown on Drawings, but not less than 10 000 A(rms) symmetrical.
b. Panelboards and overcurrent protective devices rated above 240 V and less than 600 V must have short-circuit ratings as shown on Drawings, but not less than 14 000 A(rms) symmetrical.

2.4 PANELBOARDS

A. UL QEUY - Distribution Panelboard

1. As produced by Cutler-Hammer/Eaton Corp. with LT Trim (Eaton EZ Trim shall not be considered), General Electric Co., Siemens or Square D Co.
2. Source Limitations: Obtain products from single manufacturer.
3. Listing Criteria: Investigated, labeled, and marked by qualified electrical testing laboratory in accordance with guide information and standards specified for the following UL product categories:

a. Distribution Type Panelboards: UL CCN QEUY; including UL 67 and NEMA PB 1.

4. Standard Features:

a. Doors: Secured with vault-type latch with tumbler lock; keyed alike.

1) For doors more than **36 inch** high, provide two latches, keyed alike.

b. Mains: [**Circuit breaker] [Lugs only**].

1) Location: [**Top] [Bottom] [Convertible between top and bottom].**
2) Main Breaker: Main lug interiors up to 400 A must be field convertible to main breaker.

c. Branch Overcurrent Protective Devices for Circuit-Breaker Frame Sizes 125 A and Smaller: **[Plug-in circuit breakers] [Bolt-on circuit breakers] [Plug-in circuit breakers where individual positive-locking device requires mechanical release for removal].**
d. Branch Overcurrent Protective Devices for Circuit-Breaker Frame Sizes Larger Than 125 A: [**Bolt-on circuit breakers] [Plug-in circuit breakers where individual positive-locking device requires mechanical release for removal].**
e. Branch Overcurrent Protective Devices: Fused switches.

5. Other Available Features Required by Project:

a. Surge Suppression: Factory installed as integral part of indicated panelboards, complying with UL 1449 SPD [**Type 1**] [**Type 2**].
b. Isolated Ground Bus: Adequate for branch-circuit isolated ground conductors; insulated from box.
c. Full-Sized Neutral: Equipped with full-capacity bonding strap for service entrance applications. Mount electrically isolated from enclosure.
d. Extra-Capacity Neutral Bus: Neutral bus rated 200 percent of phase bus and listed and labeled, by qualified electrical testing laboratory recognized by authorities having jurisdiction, as suitable for nonlinear loads in electronic-grade panelboards and others designated on Drawings. Connectors must be sized for double-sized or parallel conductors as indicated on Drawings.
e. Do not mount neutral bus in gutter.
f. Feed-Through Lugs: [**Compression**] type, suitable for use with conductor material. Locate at opposite end of bus from incoming lugs or main device.

g. Subfeed (Double) Lugs: [**Compression**]type suitable for use with conductor material. Locate at same end of bus as incoming lugs or main device.
h. Gutter-Tap Lugs: [**Compression**] type suitable for use with conductor material and with matching insulating covers. Locate at same end of bus as incoming lugs or main device.
i. Extra-Capacity Neutral Lugs: Rated 200 percent of phase lugs mounted on extra- capacity neutral bus.
j. Split Bus: Vertical buses divided into individual vertical sections.

1) Contactors in Main Bus: NEMA ICS 2, Class A, [**mechanically**] held, general-purpose controller, with same short-circuit interrupting rating as panelboard.

a) Internal Control-Power Source: Control-power transformer, with fused primary and secondary terminals, connected to main bus ahead of contactor connection.
b) External Control-Power Source: [**120 V branch circuit**] [**24 V control circuit**] .

B. UL QEUY - Lighting and Appliance Branch-Circuit Panelboard :

1. As produced by Cutler-Hammer/Eaton Corp. with LT Trim (Eaton EZ Trim shall not be considered), General Electric Co., Siemens or Square D Co.
2. Source Limitations: Obtain products from single manufacturer.
3. Listing Criteria: Investigated, labeled, and marked by qualified electrical testing laboratory in accordance with guide information and standards specified for the following UL product categories:

a. Lighting and Appliance Branch-Circuit Type Panelboards: UL CCN QEUY; including UL 67 and NEMA PB 1.

4. Standard Features:

a. Mains: **[Circuit breaker] [or] [lugs only].**

1) Location: **[Top] [Bottom] [Convertible between top and bottom].**
2) Main Breaker: Main lug interiors up to 400 A must be field convertible to main breaker.

b. Branch Overcurrent Protective Devices: [**Plug-in**] [**Bolt-on**] circuit breakers, replaceable without disturbing adjacent units.

5. Other Available Features Required by Project:

a. Surge Suppression: Factory installed as integral part of indicated panelboards, complying with UL 1449 SPD [**Type 1**] [**Type 2**].
b. Isolated Ground Bus: Adequate for branch-circuit isolated ground conductors; insulated from box.
c. Full-Sized Neutral: Equipped with full-capacity bonding strap for service entrance applications. Mount electrically isolated from enclosure.
d. Extra-Capacity Neutral Bus: Neutral bus rated 200 percent of phase bus and listed and labeled, by qualified electrical testing laboratory recognized by authorities having jurisdiction, as suitable for nonlinear loads in electronic-grade panelboards and others designated on Drawings. Connectors must be sized for double-sized or parallel conductors as indicated on Drawings.
e. Do not mount neutral bus in gutter.
f. Feed-Through Lugs: [**Compression**] type, suitable for use with conductor material. Locate at opposite end of bus from incoming lugs or main device.
g. Subfeed (Double) Lugs: [**Compression**] type suitable for use with conductor material. Locate at same end of bus as incoming lugs or main device.
h. Gutter-Tap Lugs: [**Compression**] type suitable for use with conductor material and with matching insulating covers. Locate at same end of bus as incoming lugs or main device.
i. Extra-Capacity Neutral Lugs: Rated 200 percent of phase lugs mounted on extra- capacity neutral bus.
j. Split Bus: Vertical buses divided into individual vertical sections.

1) Contactors in Main Bus: NEMA ICS 2, Class A, [**mechanically**] held, general-purpose controller, with same short-circuit interrupting rating as panelboard.

a) Internal Control-Power Source: Control-power transformer, with fused primary and secondary terminals, connected to main bus ahead of contactor connection.
b) External Control-Power Source: [**120 V branch circuit**] [**24 V control circuit**]

k. Doors: Door-in-door construction with concealed hinges; secured with **[flush] [or] [multipoint]** latch with tumbler lock; keyed alike.**[Outer door must permit full access to panel interior. Inner door must permit access to breaker operating handles and labeling, but current carrying terminals and bus must remain concealed.]**
l. Column-Type Panelboards: Single row of overcurrent devices **[with narrow gutter extension] [and] [overhead junction box equipped with ground and neutral terminal buses].**

1) Column-Type Panelboard Doors: Concealed hinges secured with multipoint latch with tumbler lock; keyed alike.

C. UL QEUY - Electronic-Grade Panelboard:

1. As produced by Cutler-Hammer/Eaton Corp. with LT Trim (Eaton EZ Trim shall not be considered), General Electric Co., Siemens or Square D Co.
2. Source Limitations: Obtain products from singlemanufacturer.
3. Listing Criteria: Investigated, labeled, and marked by qualified electrical testing laboratory in accordance with guide information and standards specified for the following UL product categories:

a. Electronic-Grade Type Panelboards: UL CCN QEUY; including UL 67 and NEMA PB 1.

4. Standard Features:

a. Main Overcurrent Protective Devices: Bolt-on thermal-magnetic circuit breakers.
b. Branch Overcurrent Protective Devices: Bolt-on thermal-magnetic circuit breakers.
c. Factory-Installed, Integral SPD:

1) Peak Surge Current Rating: Minimum single-pulse surge current withstand rating per phase may not be less than [**200 kA**] . Peak surge current rating must be arithmetic sum of ratings of individual MOVs in given mode.
2) Protection modes and UL 1449 VPR for grounded wye circuits with [**208Y/120 V**], three-phase, four-wire circuits may not exceed the following:

a) Line to Neutral: **[700 V for 208Y/120 V].**
b) Line to Ground: **[700 V for 208Y/120 V].**
c) Neutral to Ground: **[700 V for 208Y/120 V].**
d) Line to Line: **[1200 V for 208Y/120 V].**

3) Protection modes and UL 1449 VPR for 240/120 V, single-phase, three-wire circuits may not exceed the following:

a) Line to Neutral: 700 V.
b) Line to Ground: 700 V.
c) Neutral to Ground: 700 V.
d) Line to Line: 1200 V.

4) SCCR: Equal to [**SCCR of panelboard in which installed] [or 200 kA]**
5) Nominal Rating: [**20 kA**].

d. Buses:

1) Copper phase and neutral buses; 200 percent capacity neutral bus and lugs.

2) Copper equipment and isolated ground buses.

e. Doors: Secured with vault-type latch with tumbler lock; keyed alike.

2.5 DISCONNECTING AND OVERCURRENT PROTECTIVE DEVICES

A. As produced by Cutler-Hammer/Eaton Corp., General Electric Co., Siemens or Square D Co.

B. MCCB: Comply with UL 489, with [**series-connected rating**] [**interrupting capacity**] to meet available fault currents.

1. Thermal-Magnetic Circuit Breakers:

a. Inverse time-current element for low-level overloads.
b. Instantaneous magnetic trip element for short circuits.
c. Adjustable magnetic trip setting for circuit-breaker frame sizes 250 A and larger.

2. Adjustable Instantaneous-Trip Circuit Breakers: Magnetic trip element with front-mounted, field-adjustable trip setting.
3. Electronic Trip Circuit Breakers:

a. RMS sensing.
b. Field-replaceable rating plug or electronic trip.
c. Digital display of settings, trip targets, and indicated metering displays.
d. Multi-button keypad to access programmable functions and monitored data.
e. Ten-event, trip-history log. Each trip event must be recorded with type, phase, and magnitude of fault that caused trip.
f. Integral test jack for connection to portable test set or laptop computer.
g. Field-Adjustable Settings:

1) Instantaneous trip.
2) Long- and short-time pickup levels.
3) Long- and short-time adjustments.
4) Ground-fault pickup level, time delay, and I squared T response.

4. Current-Limiting Circuit Breakers: Frame sizes 400 A and smaller; let-through ratings less than NEMA FU 1, RK-5.
5. GFCI Circuit Breakers: Single- and double-pole configurations with Class A ground-fault protection (6 mA trip).
6. GFPE Circuit Breakers: Class B ground-fault protection (30 mA trip).
7. Arc-Fault Circuit Interrupter Circuit Breakers: Comply with UL 1699; 120/240 V, single- pole configuration.
8. Subfeed Circuit Breakers: Vertically mounted.
9. MCCB Features and Accessories:

a. Standard frame sizes, trip ratings, and number of poles.
b. Breaker handle indicates tripped status.
c. UL listed for reverse connection without restrictive line or load ratings.
d. Lugs: [**Compression**] style, suitable for number, size, trip ratings, and conductor materials.
e. Application Listing: Appropriate for application; Type SWD for switching fluorescent lighting loads; Type HID for feeding fluorescent and HID lighting circuits.
f. Ground-Fault Protection: [**Integrally mounted**] [**Remote-mounted**] relay and trip unit with adjustable pickup and time-delay settings, push-to-test feature, and ground- fault indicator.
g. Communication Capability: [**Circuit-breaker-mounted**] [**Universal-mounted**] [**Integral**] [**Din-rail-mounted**] communication module with functions and features compatible with power monitoring and control system.
h. Shunt Trip: [**120 V**] [**24 V**] <**Insert voltage**> trip coil energized from separate circuit, set to trip at [**55**] [**75**] percent of rated voltage.

i. Handle Padlocking Device: Fixed attachment, for locking circuit-breaker handle in [**on**] [**off**] [**on or off**] position.
j. Handle Clamp: Loose attachment, for holding circuit-breaker handle in on position.
k. Undervoltage Trip: Set to operate at 35 to 75 percent of rated voltage [**without intentional**] [**with field-adjustable 0.1- to 0.6-second**] time delay.
l. Rating Plugs: Three-pole breakers with ampere ratings greater than [**150**] <**Insert value**> A must have interchangeable rating plugs or electronic adjustable trip units.
m. Auxiliary Contacts: [**One, SPDT switch**] [**Two, SPDT switches**] with "a" and "b" contacts; "a" contacts mimic circuit-breaker contacts and "b" contacts operate in reverse of circuit-breaker contacts.
n. Alarm Switch: Single-pole, normally open contact that actuates only when circuit breaker trips.
o. Key Interlock Kit: Externally mounted to prohibit circuit-breaker operation; key must be removable only when circuit breaker is in off position.
p. Zone-Selective Interlocking: Integral with electronic trip unit; for interlocking ground- fault protection function with other upstream or downstream devices.
q. Multipole units enclosed in [**single housing with single handle**] [**or**] [**factory assembled to operate as single unit**].

C. Fused Switch: NEMA KS 1, Type HD; clips to accommodate specified fuses; lockable handle.

1. Provide fuses and spare fuse cabinet.
2. Fused Switch Features and Accessories:

a. Standard ampere ratings and number of poles.
b. Mechanical cover interlock with manual interlock override, to prevent opening of cover when switch is in on position. Interlock must prevent switch from being turned on with cover open. Operating handle must have lock-off means with provisions for three padlocks.
c. Auxiliary Contacts: [**One**] [**Two**] normally open and normally closed contact(s) that operate with switch handle operation.

2.6 MAINTENANCE MATERIAL ITEMS

A. Spare Parts: Furnish to Owner spare parts, for repairing panelboards and related equipment, that are packaged with protective covering for storage on-site and identified with labels describing contents.[**Include the following:**]

1. Yale No. 511S locks with brass cylinder rosette, blind fastened from inside of door. 2 No. 47 keys with each lock (Exception: Not more than 7 keys, total) Keys: [**Two**] <**Insert number**> spares for each type of panelboard cabinet lock.
2. Circuit Breakers Including GFCI and GFPE Types: [**Two**] <**Insert number**> spares for each panelboard.
3. Fuses for Fused Switches: Equal to 10 percent of quantity installed for each size and type, but no fewer than three of each size and type.
4. Fuses for Fused Power-Circuit Devices: Equal to 10 percent of quantity installed for each size and type, but no fewer than three of each size and type.

B. Special Tools: Furnish to Owner proprietary equipment, keys, and software required to operate, maintain, repair, adjust, or implement future changes to panelboards and related equipment, that are packaged with protective covering for storage on-site and identified with labels describing contents.[**Include the following:**]

1. Accessory Set: Include tools and miscellaneous items required for overcurrent protective device test, inspection, maintenance, and operation.
2. Portable Test Set: For testing functions of solid-state trip devices without removing from panelboard. Include relay and meter test plugs suitable for testing panelboard meters and switchboard class relays.

PART 3 - EXECUTION

3.1 EXAMINATION

A. Verify actual conditions with field measurements prior to ordering panelboards to verify that equipment fits in allocated space in, and comply with, minimum required clearances specified in NFPA 70.

B. Receive, inspect, handle, and store panelboards in accordance with [**NECA 407**] [**NEMA PB 1.1**].

C. Examine panelboards before installation. Reject panelboards that are damaged, rusted, or have been subjected to water saturation.

D. Examine elements and surfaces to receive panelboards for compliance with installation tolerances and other conditions affecting performance of theWork.

E. Proceed with installation only after unsatisfactory conditions have been corrected.

3.2 INSTALLATION

A. Comply with manufacturer's published instructions.

B. Reference Standards:

1. Panelboards: Unless more stringent requirements are specified in Contract Documents or manufacturers' published instructions, comply with [**NECA 407**] [**NEMA PB 1.1**].
2. Consult Director’s Representative for resolution of conflictingrequirements.

C. Special Techniques:

1. Equipment Mounting:

a. Install floor-mounted panelboards on cast-in-place concrete equipment base(s).
b. Attach panelboard to vertical finished or structural surface behind panelboard.
c. Mount surface-mounted panelboards to steel slotted supports **5/8 inch, 1- 1/4 inch** in depth. Orient steel slotted supports vertically.
d. Provide seismic control devices.

2. Temporary Lifting Provisions: Remove temporary lifting eyes, channels, and brackets and temporary blocking of moving parts frompanelboards.
3. Provide mounting and anchoring devices.
4. Mount top of trim **7.5 ft** above finished floor unless otherwise indicated.
5. Mount panelboard cabinet plumb and rigid without distortion of box.
6. Mount recessed panelboards with fronts uniformly flush with wall finish and mating with back box.
7. Install overcurrent protective devices and controllers not already factory installed.

a. Set field-adjustable, circuit-breaker trip ranges.
b. Tighten bolted connections and circuit breaker connections using calibrated torque wrench or torque screwdriver in accordance with manufacturer's published instructions.

8. Make grounding connections and bond neutral for services and separately derived systems to ground. Make connections to grounding electrodes, separate grounds for isolated ground bars, and connections to separate groundbars.
9. Install filler plates in unused spaces.
10. Stub four 1 inch empty conduits from panelboard into accessible ceiling spaceor space designated to be ceiling space in future. Stub four 1 inch empty conduits into raised floor space or below slab not ongrade.

11. Arrange conductors in gutters into groups and bundle and wrap with wire ties[**after completing load balancing**].
12. Mount spare fuse cabinet in accessible location.

D. Remove the neutral to ground main/system bonding jumper unless the panelboard is used for a service entrance or if the panel if fed by a separately derived system. Turn the bonding jumper over to the Director's Representative.

E. Interfaces with Other Work:

1. Coordinate layout and installation of panelboards and components with other construction that penetrates walls or is supported by them, including electrical and other types of equipment, raceways, piping, encumbrances to workspace clearance requirements, and adjacent surfaces. Maintain required workspace clearances and required clearances for equipment access doors and panels.

3.3 IDENTIFICATION

A. Identify field-installed conductors, interconnecting wiring, and components.

B. Install warning signs.

C. Panelboard Nameplates: Label each panelboard with nameplate that explains the means of identifying each ungrounded system conductor by phase and system. Examples of nameplate statements:

1. Identification of 120/240 Volt Circuit Conductors:

a. 2 wire circuit - white*, black.
b. 3 wire circuit - white*, black, red.
c. 4 wire circuit - white*, black, red, blue.

*White is used only as neutral. Where neutral is not required, black, red, or black, red, blue is used for phase to phase circuits.

D. Device Nameplates: Label each branch circuit device in power panelboards with nameplate.

E. Panelboard Label: Manufacturer's name and trademark, voltage, amperage, number of phases, and number of poles must be located on interior of panelboard door.

F. Breaker Labels: Faceplate must list current rating, UL and IEC certification standards, and AIC rating.

G. Circuit Directory:

1. Provide directory card inside panelboard door, mounted in **[transparent card holder] [metal frame with transparent protective cover].**

a. Circuit directory must identify specific purpose with detail sufficient to distinguish it from other circuits.

2. Provide computer-generated circuit directory mounted inside panelboard door with transparent plastic protective cover.

a. Circuit directory must identify specific purpose with detail sufficient to distinguish it from other circuits.

3. Create directory to indicate installed circuit loads[**after balancing panelboard loads**]; incorporate Owner's final room designations. Obtain approval before installing. Handwritten directories are not acceptable. Install directory inside panelboard door.

3.4 FIELD QUALITY CONTROL

A. Administrant for Low-Voltage Electrical Tests and Inspections:

1. [Owner**'s Representative**] will engage qualified low-voltage electrical testing and inspecting agency to administer and perform tests and inspections.
2. Engage qualified low-voltage electrical testing and inspecting agency to administer and perform tests and inspections.
3. Engage factory-authorized service representative to administer and perform tests and inspections on components, assemblies, and equipment installations, including connections.
4. Administer and perform tests and inspections[**with assistance of factory-authorized service representative**].

B. Acceptance Testing Preparation:

1. Test insulation resistance for each panelboard bus, component, connecting supply, feeder, and control circuit.
2. Test continuity of each circuit.

C. Field tests and inspections must be witnessed by Director's Representative.

D. Tests and Inspections:

1. Perform each visual and mechanical inspection and electrical test for low-voltage air circuit breakers[**and low-voltage surge arrestors**] stated in NETA ATS, Paragraph 7.6 Circuit Breakers[**and Paragraph 7.19.1 Surge Arrestors, Low-Voltage**]. [**Do not perform**] [**Perform**] optional tests. Certify compliance with test parameters.
2. Correct malfunctioning units on-site, where possible, and retest to demonstrate compliance; otherwise, replace with new units and retest.
3. Perform the following infrared scan tests and inspections and prepare reports:

a. Initial Infrared Scanning: After Substantial Completion, but not more than 60 days after Final Acceptance, perform infrared scan of each panelboard. Remove front panels so joints and connections are accessible to portable scanner.
b. Follow-up Infrared Scanning: Perform additional follow-up infrared scan of each panelboard 11 months after date of Substantial Completion.
c. Instruments and Equipment:

1) Use infrared scanning device designed to measure temperature or to detect significant deviations from normal values. Provide calibration record for device.

E. Nonconforming Work:

1. Panelboards will be considered defective if they do not pass tests and inspections.
2. Remove and replace defective units and retest.

F. Field Quality-Control Reports: Collect, assemble, and submit test and inspection reports.

1. Include certified report that identifies panelboards included and that describes scanning results, with comparisons of two scans. Include notation of deficiencies detected, remedial action taken, and observations after remedial action.

G. Manufacturer Services: Engage factory-authorized service representative to [**support**] [**supervise**] field tests and inspections.

3.5 ADJUSTING

A. Adjust moving parts and operable components to function smoothly, and lubricate as recommended by manufacturer.

B. Set field-adjustable circuit-breaker trip ranges.

C. Load Balancing: After Substantial Completion, but not more than 60 days after Final Acceptance, measure load balancing and make circuit changes. Prior to making circuit changes to achieve load balancing, inform Director's Representative of effect on phase color coding.

1. Measure loads during period of normal facility operations.
2. Perform circuit changes to achieve load balancing outside normal facility operation schedule or at times directed by Director's Representative . Avoid disrupting services such as fax machines and on-line data processing, computing, transmitting, and receiving equipment.
3. After changing circuits to achieve load balancing, recheck loads during normal facility operations. Record load readings before and after changing circuits to achieve load balancing.
4. Tolerance: Maximum difference between phase loads, within panelboard, may not exceed 20 percent.

3.6 PROTECTION

A. Temporary Heating: Prior to energizing panelboards, apply temporary heat to maintain temperature in accordance with manufacturer's published instructions.

END OF SECTION 262416

SECTION 262719

MULTI-OUTLET ASSEMBLIES

PART 1 - GENERAL

1.1 RELATED DOCUMENTS

1.2 SUMMARY

A. Section Includes:

1. Wall-mounted, surface metal raceway multi-outlet assemblies.
2. Floor-mounted, recessed metal raceway multi-outlet assemblies.
3. Floor-mounted, enclosure multi-outlet assembly.
4. Fire-rated, poke-through assemblies.
5. Above-floor service fittings.

B. Related Requirements:

1. Section 260533 "Raceway and Boxes for Electrical Systems" for raceways.
2. Section 262726 "Wiring Devices" for receptacles and switches.

1.3 DEFINITIONS

A. Miniature 8-Position Series Jack (8PSJ): Also called an "8-position 8-contact" (8P8C) modular jack. An unkeyed jack with up to eight contacts commonly used to terminate twisted-pair and multiconductor Ethernet cable. Shape and dimensions are specified by TIA-1096.

B. Caution: This is not the same thing as an FCC "registered jack" RJ45S, now called a miniature "8-position keyed jack" (8PKJ). Ethernet cable plugs do not have rejection keys. Many manufacturers and suppliers incorrectly use "RJ45" as a generic term to describe any 8-position series plug or jack whether or not it has a rejection key.

C. Multi-Outlet Assembly: A type of surface, flush, or freestanding raceway designed to hold conductors, receptacles, and switches, assembled in the field or at the factory.

1.4 SUBMITTALS

A. Submittals for this section are subject to the re-evaluation fee identified in Article 4 of the General Conditions.

B. Manufacturer’s installation instructions shall be provided along with product data.

C. Submittals shall be provided in the order in which they are specified and tabbed (for combined submittals).

D. Product Data: For each type of product.

E. Submittals for this section are subject to the re-evaluation fee identified in Article 4 of the General Conditions.

F. Field quality-control reports.

1.5 CLOSEOUT SUBMITTALS

A. Operation and Maintenance Data: For wiring devices to include in all manufacturers' packing-label warnings and instruction manuals that include labeling conditions.

PART 2 - PRODUCTS

2.1 WALL-MOUNTED, SURFACE METAL RACEWAY MULTI-OUTLET ASSEMBLIES

A. Performance Criteria:

1. Description: Two-piece surface metal raceway, field assembled and wired or with factory-wired multi-outlet harness, including outlets.
2. Standards:

   a. Listed and labeled in accordance with UL 5 for exposed power raceway and fittings. Multi-outlet assemblies used for communications or data shall also comply with UL 5C for exposed communications raceway and fittings, and UL 2024 for communications cable routing.
   b. Provide separate paths for management of telecommunications and power cables.
   c. Listed and labeled in accordance with NFPA 70 and NEMA 250 for intended location and use.

B. Source Limitations: Obtain products from single manufacturer designed for use as complete, matching assembly of raceways, receptacles, and switches.

C. Wall-Mounted, Surface Metal Raceway Power Multi-Outlet Assembly

1. Manufacturers: Subject to compliance with requirements, available manufacturers offering products that may be incorporated into the Work include, but are not limited to the following:

   a. ABB, Electrification Products Division (Thomas & Betts Corp.).
   b. Mono-Systems Inc.
   c. Wiremold; Legrand North America, LLC.
   d. Or equal.

2. Product Description: Two-piece surface metal raceway for power outlets.
3. Material: [**Steel**] with manufacturer's standard finish.
4. Color: Per Architect
5. Power Outlets: As indicated on plans and in accordance with Section 262726 "Wiring Devices."
6. Power Outlet Spacing: [**18 inches**].
7. Wiring: [**Single circuit**] [**Two circuits, connecting alternating receptacles or switches,**] in accordance with Section 260519 "Low-Voltage Electrical Power Conductors and Cables."

D. Wall-Mounted, Surface Metal Raceway Power and Communications Multi-Outlet Assembly

1. Manufacturers: Subject to compliance with requirements, available manufacturers offering products that may be incorporated into the Work include, but are not limited to the following:

   a. ABB, Electrification Products Division (Thomas & Betts Corp.).
   b. Mono-Systems Inc.
   c. Wiremold; Legrand North America, LLC.
   d. Or equal.

2. Product Description: Multi-piece surface metal raceway for power and communications/data outlets with separate raceway channels for power and communications wiring and separate covers for each channel.
3. Material: [**Steel**], with manufacturer's standard finish.
4. Color: Per Architect.
5. Power Outlets: As indicated on plans and in accordance with Section 262726 "Wiring Devices."
6. Power Outlet Spacing: [**18 inches**].
7. Power Wiring: [**Single circuit**] [**Two circuits, connecting alternating receptacles or switches,**] in accordance with Section 260519 "Low-Voltage Electrical Power Conductors and Cables."
8. Voice and Data Communication Outlets: <**Indicate quantity**> [**blank insert with bushed cable opening**] [**8PSJ jacks**] complying with requirements in Section 271500 "Communications Horizontal Cabling."
9. A minimum of [**two**] [**four**] four-pair cables in accordance with Section 271513 "Communications Copper Horizontal Cabling" for each outlet.

2.2 FLOOR-MOUNTED, RECESSED METAL RACEWAY MULTI-OUTLET ASSEMBLIES

A. Performance Criteria:

1. Description: Two-piece flush-mounted, in-floor, metal raceway, with factory-wired multi-outlet harness, for installation flush in floor or under floor finish.
2. Standards:

a. Listed and labeled in accordance with UL 5 for exposed power raceway and fittings, UL 5C for exposed communications raceway and fittings, and UL 2024 for communications cable routing.
b. Provide separate paths for management of telecommunications and power cables.
c. Listed and labeled in accordance with NFPA 70 and NEMA 250 for intended location and use.

B. Source Limitations: Obtain products from single manufacturer designed for use as complete, matching assembly of raceways and receptacles.

C. Floor-Mounted, Recessed Metal Raceway Power Multi-Outlet Assembly

1. Manufacturers: Subject to compliance with requirements, available manufacturers offering products that may be incorporated into the Work include, but are not limited to the following:

a. ABB, Electrification Products Division (Thomas & Betts Corp.).
b. Mono-Systems Inc.
c. Wiremold; Legrand North America, LLC.
d. Or equal.

2. Product Description: In-floor, flush-mounted raceway with [**flush**] [**surface**]-mounted power receptacle outlets.
3. Load-Bearing Capacity: [**1000 lb**]
4. Material: [**Steel**] [**Aluminum**], with manufacturer's standard finish.
5. Color: Per Architect
6. Power Outlets: As indicated on plans and in accordance with Section 262726 "Wiring Devices" in surface-mounted enclosure capable of mounting anywhere along length of recessed raceway.
7. Wiring: [**Single circuit**] [**Two circuits, connecting alternating receptacles,**] in accordance with Section 260519 "Low-Voltage Electrical Power Conductors and Cables."

D. Floor-Mounted, Recessed Metal Raceway Power and Communications Multi-Outlet Assembly:

1. Manufacturers: Subject to compliance with requirements, available manufacturers offering products that may be incorporated into the Work include, but are not limited to the following:

a. Wiremold; Legrand North America, LLC.
b. Or approved equal.

2. Product Description: In-floor, flush-mounted raceway with [**flush**] [**surface**]-mounted power receptacle outlets.
3. Load-Bearing Capacity: [**1000 lb**]
4. Material: [**Steel**] [**Aluminum**], with manufacturer's standard finish.
5. Color: Per Architect.
6. Power Outlets: As indicated on plans and in accordance with Section 262726 "Wiring Devices" in surface-mounted enclosure capable of mounting anywhere along length of recessed raceway.

7. Power Wiring: [**Single circuit**] [**Two circuits, connecting alternating receptacles,**] in accordance with Section 260519 "Low-Voltage Electrical Power Conductors and Cables."

2.3 FLOOR-MOUNTED ENCLOSURE MULTI-OUTLET ASSEMBLY

A. Performance Criteria:

1. Description: Floor-mounted box with cover enclosing multiple power[**and communications**] outlets in a single assembly.
2. Standards:

   a. Listed and labeled in accordance with NFPA 70 and NEMA 250 for intended location and use.
   b. Listed and labeled in accordance with UL 514A for metallic boxes, in accordance with UL 514C for nonmetallic boxes, including scrub-water exclusion requirements.
   c. Listed and labeled in accordance with UL 514D for cover plates.
   d. Provide separate paths for management of telecommunications and power cables in compliance with NFPA 76.

3. Compartments: Barrier separates power from voice and data communication cabling.

B. Source Limitations: Obtain products from single manufacturer designed for use as complete, matching assembly of raceways and receptacles.

C. Floor-Mounted Enclosure Multi-Outlet Assembly :

1. Manufacturers: Subject to compliance with requirements, available manufacturers offering products that may be incorporated into the Work include, but are not limited to the following:

   a. Wiremold; Legrand North America, LLC.
   b. Or equal.

2. Floor Box and Cover:

   a. [**Provide floor boxes classified for use in 1-hour-rated concrete floors. Boxes for floors in contact with earth shall be protected with an epoxy paint.**]
   b. [**Provide floor boxes classified for use in 1-1/2-hour-rated concrete floors. Boxes for floors in contact with earth shall be protected with an epoxy paint.**]
   c. [**Provide floor boxes classified for use in 2-hour-rated concrete floors. Boxes for floors in contact with earth shall be protected with an epoxy paint.**]
   d. [**Provide floor boxes classified for use in 3-hour-rated concrete floors. Boxes for floors in contact with earth shall be protected with an epoxy paint.**]
   e. [**Provide floor boxes for installation in raised floors.**]
   f. Floor boxes for concrete floors shall provide a minimum of 4 inches of adjustment prior to concrete pour and a minimum of 1/2 inch after concrete is set.
   g. Provide [**cast-metal**] [**sheet metal**] floor boxes with [**four**] [**six**] [**eight**] [**10**] gangs.
   h. Provide brass or aluminum flanges approved for use on carpet, tile, or wood floor applications. Flanges and cover plates shall have a buffed appearance and a

protective finish. Covers shall match the appearance of floor flanges and provide access to all included devices.

i. Covers shall lay flat on the floor surface when open. Provide for cable egress when the cover is closed. Provide ADA-compliant covers.

j. Provide flanges, mounting brackets, keystones, and accessories for mounting all devices and connections indicated on Drawings.

3. Outlets:

a. Power Outlets: As indicated on plans and in accordance with Section 262726 "Wiring Devices."

b. Wiring: [**Single circuit**] [**Two circuits, connecting alternating receptacles,**] in accordance with Section 260519 "Low-Voltage Electrical Power Conductors and Cables."

2.4 FIRE-RATED, POKE-THROUGH ASSEMBLIES

A. Performance Criteria:

1. Description: Factory-fabricated assembly of below-floor junction box with multichannel, through-floor raceway/firestop unit with receptacles or communications outlets installed below floor surface level.

2. Standards:

a. Listed and labeled in accordance with UL 514A for metallic boxes, or in accordance with UL 514C for nonmetallic boxes, including scrub-water exclusion requirements.

b. Provide separate paths for management of telecommunications and power cables.

c. Listed and labeled in accordance with NFPA 70 and NEMA 250 for intended location and use.

3. Fire Rating: Provide unit listed and labeled for fire rating of floor-ceiling assembly.

B. Source Limitations: Obtain products from single manufacturer designed for use as complete, matching assembly of raceways and receptacles.

C. [**Recessed**] [**Flush**] Type, Fire-Rated, Poke-Through Assembly:

1. Manufacturers: Subject to compliance with requirements, available manufacturers offering products that may be incorporated into the Work include, but are not limited to the following:

a. ABB, Electrification Products Division (Thomas & Betts Corp.).

b. Raco Inc.

c. Wiring Device-Kellems; Hubbell Incorporated, Commercial and Industrial.

d. Or equal.

2. Product Description: Through-floor power assembly with included raceways, box for power connections, and internal space for power and communications/data outlets. Assembly shall maintain floor fire rating.

3. Description: Modular, [**recessed**] [**flush**] [**pedestal**]-type, dual-service units suitable for wiring method used[**, with cover flush with finished floor**].
4. Service Plate[**, Flaps**] and Cover: [**Rectangular**] [**Round**], [**die-cast aluminum**] [**solid brass**] with satin finish.
5. Core Size: Selected to fit nominal [**4-inch**] [**6-inch**] [**8-inch**] [**10-inch**] cored holes in floor and matched to floor thickness.
6. Closure Plug: Close unused cored opening and reestablish fire rating of floor.
7. Feed Conduits: Provide connection points for conduits as indicated on Drawings or required for conductors shown. Provide minimum [**1-1/4 inch**] conduits for communications cables.
8. Power Outlets: <**Indicate quantity**> <**Indicate receptacle type**> gray finish, unless otherwise indicated, in accordance with Section 262726 "Wiring Devices."
9. Telephone and Data Outlets: <**Indicate quantity**> [**blank cover with bushed cable opening.**] [**modular, keyed, color-coded, 8PSJ jacks in accordance with Section 271513 "Communications Copper Horizontal Cabling."**]
10. Audio and Video Outlets: [**Blank cover with bushed cable opening**] <**Indicate quantity and type**>.

PART 3 - EXECUTION

3.1 INSTALLATION

A. Comply with NECA 1 for installation requirements, except where requirements on Drawings or in this Section are stricter.

B. Comply with NECA 101 for installation requirements for steel raceways, except where requirements on Drawings or in this Section are stricter.

C. Comply with NECA 102 for installation requirements for aluminum raceways, except where requirements on Drawings or in this Section are stricter.

D. Comply with NFPA 70 limitations for types of raceways allowed in specific occupancies.

E. Provide terminations, adapters, boxes, and other fittings required for the installation.

F. Install surface raceway with a minimum 2-inch radius control at bend points.

G. Secure metallic surface raceway with screws or other anchor-type devices at intervals not exceeding 48 inches and with no fewer than two supports per straight raceway section. Support surface raceway according to manufacturer's written instructions. Tape and glue are unacceptable support methods.

H. Do not install aluminum raceways or fittings in contact with concrete.

I. Secure nonmetallic surface raceway with screws or other anchor-type devices in each wiring channel at intervals not exceeding 18 inches and with no fewer than two supports per straight raceway section in each wiring channel. Support nonmetallic surface raceway according to manufacturer's written instructions. Tape and glue are unacceptable support methods.

J. Do not install PVC raceways where ambient temperature exceeds [**122 deg F**] .Conductors with insulation rated higher than 75 deg C installed in PVC raceways may not be operated at a temperature greater than 75 deg C.

K. Comply with Section 260526 "Grounding and Bonding for Electrical Systems."

L. Comply with requirements in Section 260529 "Hangers and Supports for Electrical Systems" for hangers and support.

M. Comply with requirements in Section 260533 "Raceway and Boxes for Electrical Systems" for installation of raceways and additional requirements for floor boxes.

N. Coordination with Other Work:

1. Adjust locations of multi-outlet assemblies to suit arrangement of partitions and furnishings. Locate outlets to avoid blocking by supports, furnishings, and other architectural fixtures.
2. Provide outlets with special requirements, such as GFCI, AFCI, or special environmental requirements, where required by Drawings or to meet codes.
3. Adjust locations of poke-through assembly penetrations to coordinate with locations of structural members, concealed piping, and concealed conduit. Obtain written approval from Architect prior to drilling penetrations in floors other than where dimensioned on architectural Drawings. Comply with requirements in Section for "Penetration Firestopping."

3.2 IDENTIFICATION

A. Comply with Section 260553 "Identification for Electrical Systems."

END OF SECTION 262719

SECTION 262726

WIRING DEVICES

PART 1 - GENERAL

1.1 RELATED DOCUMENTS

A. Drawings and general provisions of the Contract, including General and Supplementary Conditions and Division 01 Specification Sections, apply to this Section.

1.2 SUMMARY

A. Section Includes:

1. Standard-grade receptacles, 125 V, [**20**] A.
2. USB receptacles.
3. GFCI receptacles, 125 V, 20 A.
4. SPD receptacles, 125 V, 20 A.
5. Hazardous (classified) location receptacles.
6. Twist-locking receptacles.
7. Pendant cord-connector devices.
8. Cord and plug sets.
9. Toggle switches, 120/277 V, [**20**] A.
10. Decorator-style devices, [**20**] A.
11. Occupancy sensors.
12. Digital timer light switches.
13. Residential devices.
14. Wall-box dimmers.
15. Wall plates.
16. Floor service fittings.
17. Poke-through assemblies.
18. Prefabricated multioutlet assemblies.
19. Service poles.

1.3 DEFINITIONS

A. AFCI: Arc-fault circuit interrupter.

B. BAS: Building automation system.

C. EMI: Electromagnetic interference.

D. GFCI: Ground-fault circuit interrupter.

E. Pigtail: Short lead used to connect a device to a branch-circuit conductor.

F. RFI: Radio-frequency interference.

G. SPD: Surge protective device.

1.4 SUBMITTALS

A. Submittals for this section are subject to the re-evaluation fee identified in Article 4 of the General Conditions.

B. Manufacturer's installation instructions shall be provided along with product data.

C. Submittals shall be provided in the order in which they are specified and tabbed (for combined submittals).

D. Product Data: For each type of product.

E. Shop Drawings: List of legends and description of materials and process used for premarking wall plates.

F. Samples: One for each type of device and wall plate specified, in each color specified.

G. Submittals for this section are subject to the re-evaluation fee identified in Article 4 of the General Conditions.

H. Field quality-control reports.

1.5 CLOSEOUT SUBMITTALS

A. Operation and Maintenance Data: For wiring devices to include in all manufacturers' packing-label warnings and instruction manuals that include labeling conditions.

1.6 MAINTENANCE MATERIAL SUBMITTALS

A. Furnish extra materials that match products installed and that are packaged with protective covering for storage and identified with labels describing contents.

1. Service/Power Poles: [**One for every 10**] but no fewer than [**one**].
2. Floor Service-Outlet Assemblies: [**One for every 10**], but no fewer than [**one**]
3. Poke-Through, Fire-Rated Closure Plugs: [**One for every five**] floor service outlets installed, but no fewer than [**two**] .
4. SPD Receptacles: [**One for every 10**] of each type installed, but no fewer than [**two of each type**]

PART 2 - PRODUCTS

2.1 GENERAL WIRING-DEVICE REQUIREMENTS

A. Wiring Devices, Components, and Accessories: Listed and labeled as defined in NFPA 70, by a qualified testing agency, and marked for intended location and use.

B. Comply with NFPA 70.

C. RoHS compliant.

D. Comply with NEMA WD 1.

E. Devices that are manufactured for use with modular plug-in connectors may be substituted under the following conditions:

1. Connectors shall comply with UL 2459 and shall be made with stranding building wire.
2. Devices shall comply with requirements in this Section.

F. Devices for Owner's Representative-Furnished Equipment:

1. Receptacles: Match plug configurations.
2. Cord and Plug Sets: Match equipment requirements.

G. Device Color:

1. Wiring Devices Connected to Normal Power System: [**As selected by Architect]** unless otherwise indicated or required by NFPA 70 or device listing.
2. Wiring Devices Connected to Essential Electrical System: [**Red**] .
3. SPD Devices: Blue.
4. Isolated-Ground Receptacles: [**Orange**] [**As specified above, with orange triangle on face**].

H. Wall Plate Color: For plastic covers, match device color.

I. Source Limitations: Obtain each type of wiring device and associated wall plate from single source from single manufacturer.

2.2 STANDARD-GRADE RECEPTACLES, 125 V, 20 A

A. Duplex Receptacles, 125 V, 20 A:

1. Manufacturers: Subject to compliance with requirements, [provide products by the following] [provide products by one of the following] [available manufacturers offering products that may be incorporated into the Work include, but are not limited to, the following]:

   a. Leviton Manufacturing Co., Inc.
   b. Pass & Seymour; Legrand North America, LLC.
   c. Wiring Device-Kellems; Hubbell Incorporated, Commercial and Industrial.
   d. Or equal.

2. Description: Two pole, three wire, and self-grounding.
3. Configuration: NEMA WD 6, Configuration 5-20R.
4. Standards: Comply with UL 498 and FS W-C-596.

B. Isolated-Ground Duplex Receptacles, 125 V, 20 A

1. Manufacturers: Subject to compliance with requirements, [provide products by the following] [provide products by one of the following] [available manufacturers offering products that may be incorporated into the Work include, but are not limited to, the following]:

   a. Leviton Manufacturing Co., Inc.
   b. Pass & Seymour; Legrand North America, LLC.
   c. Wiring Device-Kellems; Hubbell Incorporated, Commercial and Industrial.
   d. Or equal.

2. Description: Straight blade; equipment grounding contacts shall be connected only to green grounding screw terminal of the device and with inherent electrical isolation from mounting strap. Isolation shall be integral to receptacle construction and not dependent on removable parts. Two pole, three wire, and self-grounding.
3. Configuration: NEMA WD 6, Configuration 5-20R.
4. Standards: Comply with UL 498 and FS W-C-596.

C. Tamper-Resistant Duplex Receptacles, 125 V, 20 A

1. Manufacturers: Subject to compliance with requirements, [provide products by the following] [provide products by one of the following] [available manufacturers offering products that may be incorporated into the Work include, but are not limited to, the following]:

    a. Leviton Manufacturing Co., Inc.
    b. Pass & Seymour; Legrand North America, LLC.
    c. Wiring Device-Kellems; Hubbell Incorporated, Commercial and Industrial.
    d. Or equal.

2. Description: Two pole, three wire, and self-grounding. Integral shutters that operate only when a plug is inserted in the receptacle.
3. Configuration: NEMA WD 6, Configuration 5-20R.
4. Standards: Comply with UL 498 and FS W-C-596.
5. Marking: Listed and labeled as complying with NFPA 70, "Tamper-Resistant Receptacles" Article.

D. Weather-Resistant Duplex Receptacle, 125 V, 20 A

1. Manufacturers: Subject to compliance with requirements, [provide products by the following] [provide products by one of the following] [available manufacturers offering products that may be incorporated into the Work include, but are not limited to, the following]:

    a. Leviton Manufacturing Co., Inc.
    b. Pass & Seymour; Legrand North America, LLC.
    c. Wiring Device-Kellems; Hubbell Incorporated, Commercial and Industrial.
    d. Or equal.

2. Description: Two pole, three wire, and self-grounding. Integral shutters that operate only when a plug is inserted in the receptacle. Square face.
3. Configuration: NEMA WD 6, Configuration 5-20R.
4. Standards: Comply with UL 498.
5. Marking: Listed and labeled as complying with NFPA 70, "Receptacles in Damp or Wet Locations" Article.

E. Tamper- and Weather-Resistant Duplex Receptacles, 125 V, 20 A

1. Manufacturers: Subject to compliance with requirements, [provide products by the following] [provide products by one of the following] [available manufacturers offering products that may be incorporated into the Work include, but are not limited to, the following]:

    a. Leviton Manufacturing Co., Inc.
    b. Pass & Seymour; Legrand North America, LLC.
    c. Wiring Device-Kellems; Hubbell Incorporated, Commercial and Industrial.
    d. Or equal.

2. Description: Two pole, three wire, and self-grounding. Integral shutters that operate only when a plug is inserted in the receptacle. Square face.
3. Configuration: NEMA WD 6, Configuration 5-20R.
4. Standards: Comply with UL 498.
5. Marking: Listed and labeled as complying with NFPA 70, "Tamper-Resistant Receptacles" and "Receptacles in Damp or Wet Locations" articles.

2.3 USB RECEPTACLES

A. USB Charging Receptacles

1. Manufacturers: Subject to compliance with requirements, [provide products by the following] [provide products by one of the following] [available manufacturers offering products that may be incorporated into the Work include, but are not limited to, the following]:

a. Leviton Manufacturing Co., Inc.
b. Pass & Seymour; Legrand North America, LLC.
c. Wiring Device-Kellems; Hubbell Incorporated, Commercial and Industrial.
d. Or equal.

2. Description: Single-piece, rivetless, nickel-plated, all-brass grounding system. Nickel-plated, brass mounting strap.
3. USB Receptacles: [**Dual**] [**and**] [**quad**], USB Type A, 5 V dc, and 2.1 A per receptacle (minimum).
4. Standards: Comply with UL 1310 and USB 3.0 devices.

B. Tamper-Resistant Duplex and USB Charging Receptacles:

1. Manufacturers: Subject to compliance with requirements, [provide products by the following] [provide products by one of the following] [available manufacturers offering products that may be incorporated into the Work include, but are not limited to, the following]:

a. Leviton Manufacturing Co., Inc.
b. Pass & Seymour; Legrand North America, LLC.
c. Wiring Device-Kellems; Hubbell Incorporated, Commercial and Industrial.
d. Or equal.

2. Description: Single-piece, rivetless, nickel-plated, all-brass grounding system. Nickel-plated, brass mounting strap. Integral shutters that operate only when a plug is inserted in the line voltage receptacle.
3. Line Voltage Receptacles: Two pole, three wire, and self-grounding; NEMA WD 6, Configuration 5-20R.
4. USB Receptacles: Dual USB Type A, 5 V dc, and 2.1 A per receptacle (minimum).
5. Standards: Comply with UL 498, UL 1310, USB 3.0 devices, and FS W-C-596.
6. Marking: Listed and labeled as complying with NFPA 70, "Tamper-Resistant Receptacles" Article.

2.4 GFCI RECEPTACLES, 125 V, 20 A

A. Duplex GFCI Receptacles, 125 V, 20 A :

1. Manufacturers: Subject to compliance with requirements, [provide products by the following] [provide products by one of the following] [available manufacturers offering products that may be incorporated into the Work include, but are not limited to, the following]:

a. Leviton Manufacturing Co., Inc.
b. Pass & Seymour; Legrand North America, LLC.
c. Wiring Device-Kellems; Hubbell Incorporated, Commercial and Industrial.
d. Or equal.

2. Description: Integral GFCI with "Test" and "Reset" buttons and LED indicator light. Two pole, three wire, and self-grounding.
3. Configuration: NEMA WD 6, Configuration 5-20R.
4. Type: [**Feed**] [**Non-feed**] through.
5. Standards: Comply with UL 498, UL 943 Class A, and FS W-C-596.
6. Provide while in use cover for wet locations to comply with NEC 406.9.

B. Tamper-Resistant Duplex GFCI Receptacles, 125 V, 20 A :

1. Manufacturers: Subject to compliance with requirements, available manufacturers offering products that may be incorporated into the Work include, but are not limited to the following:

a. Leviton Manufacturing Co., Inc.
b. Pass & Seymour; Legrand North America, LLC.
c. Wiring Device-Kellems; Hubbell Incorporated, Commercial and Industrial.
d. Or equal.

2. Description: Integral GFCI with "Test" and "Reset" buttons and LED indicator light. Two pole, three wire, and self-grounding. Integral shutters that operate only when a plug is inserted in the receptacle.
3. Configuration: NEMA WD 6, Configuration 5-20R.
4. Type: [**Feed**] [**Non-feed**] through.
5. Standards: Comply with UL 498, UL 943 Class A, and FS W-C-596.
6. Marking: Listed and labeled as complying with NFPA 70, "Tamper-Resistant Receptacles" Article.
7. Provide while in use cover for wet locations to comply with NEC 406.9.

C. Tamper- and Weather-Resistant, GFCI Duplex Receptacles, 125 V, 20 A :

1. Manufacturers: Subject to compliance with requirements, [provide products by the following] [provide products by one of the following] [available manufacturers offering products that may be incorporated into the Work include, but are not limited to, the following]:

   a. Leviton Manufacturing Co., Inc.
   b. Pass & Seymour; Legrand North America, LLC.
   c. Wiring Device-Kellems; Hubbell Incorporated, Commercial and Industrial.
   d. Or equal.

2. Description: Integral GFCI with "Test" and "Reset" buttons and LED indicator light. Two pole, three wire, and self-grounding. Integral shutters that operate only when a plug is inserted in the receptacle. Square face.
3. Configuration: NEMA WD 6, Configuration 5-20R.
4. Type: [**Feed**] [**Non-feed**] through.
5. Standards: Comply with UL 498 and UL 943 Class A.
6. Marking: Listed and labeled as complying with NFPA 70, "Tamper-Resistant Receptacles" and "Receptacles in Damp or Wet Locations" articles.
7. Provide while in use cover for wet locations to comply with NEC 406.9.

2.5 SPD RECEPTACLES, 125 V, 20 A

A. Duplex SPD Receptacles, 125 V, 20 A:

1. Manufacturers: Subject to compliance with requirements, [provide products by the following] [provide products by one of the following] [available manufacturers offering products that may be incorporated into the Work include, but are not limited to, the following]:

   a. Leviton Manufacturing Co., Inc.
   b. Pass & Seymour; Legrand North America, LLC.
   c. Wiring Device-Kellems; Hubbell Incorporated, Commercial and Industrial.
   d. Or equal.

2. Description: Two pole, three wire, and self-grounding. Integral SPD in line to ground, line to neutral, and neutral to ground. LED indicator light.
3. SPD Components: Multiple metal-oxide varistors; with a nominal clamp-level rating of 400 V and minimum single transient pulse energy dissipation of 240 J, according to IEEE C62.41.2 and IEEE C62.45.
4. Active SPD Indication: Visual and audible, with light visible in face of device to indicate device is "active" or "no longer in service."
5. Configuration: NEMA WD 6, Configuration 5-20R.
6. Standards: Comply with NEMA WD 1, UL 498, UL 1449, and FS W-C-596.

B. Isolated-Ground Duplex SPD Receptacles, 125 V, 20 A

1. Manufacturers: Subject to compliance with requirements, [provide products by the following] [provide products by one of the following] [available manufacturers offering products that may be incorporated into the Work include, but are not limited to, the following]:

   a. Leviton Manufacturing Co., Inc.

b. Pass & Seymour; Legrand North America, LLC.
c. Wiring Device-Kellems; Hubbell Incorporated, Commercial and Industrial.
d. Or equal.

2. Description: Two pole, three wire, and self-grounding. Integral SPD in line to ground, line to neutral, and neutral to ground. LED indicator light.
3. SPD Components: Multiple metal-oxide varistors; with a nominal clamp-level rating of 400 V and minimum single transient pulse energy dissipation of 240 J, according to IEEE C62.41.2 and IEEE C62.45.
4. Active SPD Indication: Visual and audible, with light visible in face of device to indicate device is "active" or "no longer in service."
5. Grounding: Equipment grounding contacts shall be connected only to green grounding screw terminal of the device and with inherent electrical isolation from mounting strap. Isolation shall be integral to receptacle construction and not dependent on removable parts.
6. Configuration: NEMA WD 6, Configuration 5-20R.
7. Standards: Comply with UL 498, UL 1449, and FS W-C-596.

2.6 CORROSION RESISTANT RECEPTACLES

1. Manufacturers: Subject to compliance with requirements, [provide products by the following] [provide products by one of the following] [available manufacturers offering products that may be incorporated into the Work include, but are not limited to, the following]:

a. Pass & Seymour; Legrand North America, LLC.
b. Crouse-Hinds Electric Company
c. Wiring Device-Kellems; Hubbell Incorporated, Commercial and Industrial.
d. Or equal.

2.7 HAZARDOUS (CLASSIFIED) LOCATION RECEPTACLES

A. Hazardous (Classified) Locations Receptacles:

1. Manufacturers: Subject to compliance with requirements, available manufacturers offering products that may be incorporated into the Work include, but are not limited to the following:

a. Arrow Hart, Wiring Devices; Eaton, Electrical Sector.
b. EGS; Emerson Electric Co., Automation Solutions, Appleton Group.
c. Killark; Hubbell Incorporated, Construction and Energy.
d. Or equal.

2. Description: Pin and sleeve receptacle with matching connector.
3. Class I.

a. Division: [**1**] [**2**].
b. Zone: [**0**] [**1**] [**2**].

4. Class II:

a. Division: [**1**] [**2**].
b. Group: [**E**] [**F**] [**G**].

5. Class III:

a. Division: [**1**] [**2**].

6. Raintight.
Voltage: [**250**] [**480**] [**600**] V ac.

Hertz: [**60**] Hz.
Amperage: [**20**] [**30**] [**60**]A.
Wires and Poles: [**Two wire, three pole**] [**Three wire, three pole**] [**Three wire, four pole**] [**Four wire, four pole**] [**Four wire, five pole**] [**Five wire, five pole**] .
Standards: Comply with NEMA FB 11 and UL 1203.

2.8 TWIST-LOCKING RECEPTACLES

A. Twist-Lock, Single Receptacles, 120 V, 20 A

1. Manufacturers: Subject to compliance with requirements, [provide products by the following] [provide products by one of the following] [available manufacturers offering products that may be incorporated into the Work include, but are not limited to, the following]:

   a. Leviton Manufacturing Co., Inc.
   b. Pass & Seymour; Legrand North America, LLC.
   c. Wiring Device-Kellems; Hubbell Incorporated, Commercial and Industrial.
   d. Or equal.

2. Configuration: NEMA WD 6, Configuration L5-20R.
3. Standards: Comply with UL 498.

B. Twist-Lock, Single Receptacles, 250 V, 20 A:

1. Manufacturers: Subject to compliance with requirements, available manufacturers offering products that may be incorporated into the Work include, but are not limited to the following:

   a. Hubbell Premise Wiring; Hubbell Incorporated, Commercial and Industrial.
   b. Leviton Manufacturing Co., Inc.
   c. Pass & Seymour; Legrand North America, LLC.
   d. Or equal.

2. Configuration: NEMA WD 6, Configuration L6-20R.
3. Standards: Comply with UL 498.

C. Twist-Lock, Isolated-Ground, Single Receptacles, 125 V, 20 A :

1. Manufacturers: Subject to compliance with requirements, available manufacturers offering products that may be incorporated into the Work include, but are not limited to the following:

   a. Hubbell Premise Wiring; Hubbell Incorporated, Commercial and Industrial.
   b. Leviton Manufacturing Co., Inc.
   c. Pass & Seymour; Legrand North America, LLC.
   d. Or equal.

2. Grounding: Equipment grounding contacts shall be connected only to green grounding screw terminal of the device and with inherent electrical isolation from mounting strap. Isolation shall be integral to receptacle construction and not dependent on removable parts.
3. Configuration: NEMA WD 6, Configuration L5-20R.
4. Standards: Comply with UL 498.

2.9 PENDANT CORD-CONNECTOR DEVICES

A. Description: Matching, locking-type plug and receptacle body connector, heavy-duty grade.

B. Manufacturers: Subject to compliance with requirements, [provide products by the following] [provide products by one of the following] [available manufacturers offering products that may be incorporated into the Work include, but are not limited to, the following]:

1. Hubbell Premise Wiring; Hubbell Incorporated, Commercial and Industrial.
2. Leviton Manufacturing Co., Inc.
3. Pass & Seymour; Legrand North America, LLC.
4. Or equal.

C. Configuration: NEMA WD 6, Configurations L5-20P and L5-20R.

D. Body: Nylon, with screw-open, cable-gripping jaws and provision for attaching external cable grip.

E. External Cable Grip: Woven wire-mesh type made of high-strength, galvanized-steel wire strand, matched to cable diameter, and with attachment provision designed for corresponding connector.

F. Standards: Comply with FS W-C-596.

2.10 CORD AND PLUG SETS

A. Match voltage and current ratings and number of conductors to requirements of equipment being connected.

B. Cord: Rubber-insulated, stranded-copper conductors, with Type SOW-A jacket; with green-insulated grounding conductor and ampacity of at least 130 percent of the equipment rating.

C. Plug: Nylon body and integral cable-clamping jaws. Match cord and receptacle type for connection.

2.11 TOGGLE SWITCHES, 120/277 V, 20 A

A. Single-Pole Switches, 120/277 V, 20 A

1. Manufacturers: Subject to compliance with requirements, [provide products by the following] [provide products by one of the following] [available manufacturers offering products that may be incorporated into the Work include, but are not limited to, the following]:

a. Leviton Manufacturing Co., Inc.
b. Pass & Seymour; Legrand North America, LLC.
c. Wiring Device-Kellems; Hubbell Incorporated, Commercial and Industrial.
d. Or equal.

2. Standards: Comply with UL 20 and FS W-S-896.

B. Antimicrobial, Single-Pole Switches, 120/277 V, 20 A

1. Manufacturers: Subject to compliance with requirements, available manufacturers offering products that may be incorporated into the Work include, but are not limited to the following:

a. Arrow Hart, Wiring Devices; Eaton, Electrical Sector.
b. Leviton Manufacturing Co., Inc.
c. Wiring Device-Kellems; Hubbell Incorporated, Commercial and Industrial.
d. Or equal.

2. Description: Contact surfaces treated with a coating that kills 99.9 percent of certain common bacteria within two hours when regularly and properly cleaned.
3. Standards: Comply with UL 20 and FS W-S-896.

C. Two-Pole Switches, 120/277 V, 20 A

1. Manufacturers: Subject to compliance with requirements, available manufacturers offering products that may be incorporated into the Work include, but are not limited to the following:

   a. Leviton Manufacturing Co., Inc.
   b. Pass & Seymour; Legrand North America, LLC.
   c. Wiring Device-Kellems; Hubbell Incorporated, Commercial and Industrial.
   d. Or equal.

2. Comply with UL 20 and FS W-S-896.

D. Antimicrobial, Double-Pole Switches, 120/277 V, 20 A

1. Manufacturers: Subject to compliance with requirements, available manufacturers offering products that may be incorporated into the Work include, but are not limited to the following:

   a. Arrow Hart, Wiring Devices; Eaton, Electrical Sector.
   b. Leviton Manufacturing Co., Inc.
   c. Wiring Device-Kellems; Hubbell Incorporated, Commercial and Industrial.
   d. Or equal.

2. Description: Contact surfaces treated with a coating that kills 99.9 percent of certain common bacteria within two hours when regularly and properly cleaned.
3. Standards: Comply with UL 20 and FS W-S-896.

E. Three-Way Switches, 120/277 V, 20 A

1. Manufacturers: Subject to compliance with requirements, available manufacturers offering products that may be incorporated into the Work include, but are not limited to the following:

   a. Leviton Manufacturing Co., Inc.
   b. Pass & Seymour; Legrand North America, LLC.
   c. Wiring Device-Kellems; Hubbell Incorporated, Commercial and Industrial.
   d. Or equal.

2. Comply with UL 20 and FS W-S-896.

F. Antimicrobial, Three-Way Switches, 120/277 V, 20 A <

1. Manufacturers: Subject to compliance with requirements, available manufacturers offering products that may be incorporated into the Work include, but are not limited to the following:

   a. Arrow Hart, Wiring Devices; Eaton, Electrical Sector.
   b. Leviton Manufacturing Co., Inc.
   c. Wiring Device-Kellems; Hubbell Incorporated, Commercial and Industrial.
   d. Or equal.

2. Description: Contact surfaces treated with a coating that kills 99.9 percent of certain common bacteria within two hours when regularly and properly cleaned.
3. Standards: Comply with UL 20 and FS W-S-896.

G. Four-Way Switches, 120/277 V, 20 A

1. Manufacturers: Subject to compliance with requirements, available manufacturers offering products that may be incorporated into the Work include, but are not limited to the following:

   a. Leviton Manufacturing Co., Inc.

b. Pass & Seymour; Legrand North America, LLC.
c. Wiring Device-Kellems; Hubbell Incorporated, Commercial and Industrial.
d. Or equal.

2. Standards: Comply with UL 20 and FS W-S-896.

H. Pilot-Light, Single-Pole Switches: 120/277 V, 20 A

1. Manufacturers: Subject to compliance with requirements, available manufacturers offering products that may be incorporated into the Work include, but are not limited to the following:

a. Leviton Manufacturing Co., Inc.
b. Pass & Seymour; Legrand North America, LLC.
c. Wiring Device-Kellems; Hubbell Incorporated, Commercial and Industrial.
d. Or equal.

2. Description: Illuminated when switch is [**on**] [**off**].
3. Standards: Comply with UL 20 and FS W-S-896.

I. Lighted Single-Pole Switches, 120/277 V, 20 A

1. Manufacturers: Subject to compliance with requirements, [provide products by the following] [provide products by one of the following] [available manufacturers offering products that may be incorporated into the Work include, but are not limited to, the following]:

a. Hubbell Premise Wiring; Hubbell Incorporated, Commercial and Industrial.
b. Leviton Manufacturing Co., Inc.
c. Pass & Seymour; Legrand North America, LLC.
d. Or equal.

2. Description: Handle illuminated when switch is [**on**] [**off**].
3. Standards: Comply with NEMA WD 1, UL 20, and FS W-S-896.

J. Key-Operated, Single-Pole Switches, 120/277 V, 20 A

1. Manufacturers: Subject to compliance with requirements, [provide products by the following] [provide products by one of the following] [available manufacturers offering products that may be incorporated into the Work include, but are not limited to, the following]:

a. Leviton Manufacturing Co., Inc.
b. Pass & Seymour; Legrand North America, LLC.
c. Wiring Device-Kellems; Hubbell Incorporated, Commercial and Industrial.
d. Or equal.

2. Description: Factory-supplied key in lieu of switch handle.
3. Standards: Comply with UL 20 and FS W-S-896.

K. Single-Pole, Double-Throw, Momentary-Contact, Center-off Switches, 120/277 V, 20 A

1. Manufacturers: Subject to compliance with requirements, [provide products by the following] [provide products by one of the following] [available manufacturers offering products that may be incorporated into the Work include, but are not limited to, the following]:

a. Leviton Manufacturing Co., Inc.
b. Pass & Seymour; Legrand North America, LLC.
c. Wiring Device-Kellems; Hubbell Incorporated, Commercial and Industrial.
d. Or equal.

2. Description: For use with mechanically held lighting contactors.
3. Standards: Comply with NEMA WD 1, UL 20, and FS W-S-896.

L. Key-Operated, Single-Pole, Double-Throw, Momentary-Contact, Center-off Switches, 120/277 V, 20 A

1. Manufacturers: Subject to compliance with requirements, [provide products by the following] [provide products by one of the following] [available manufacturers offering products that may be incorporated into the Work include, but are not limited to, the following]:

a. Leviton Manufacturing Co., Inc.
b. Pass & Seymour; Legrand North America, LLC.
c. Wiring Device-Kellems; Hubbell Incorporated, Commercial and Industrial.
d. Or equal.

2. Description: For use with mechanically held lighting contactors, with factory-supplied key in lieu of switch handle.
3. Standards: Comply with NEMA WD 1, UL 20, and FS W-S-896.

2.12 DECORATOR-STYLE DEVICES, 20 A

A. Decorator Duplex Receptacles, 125 V, 20 A

1. Manufacturers: Subject to compliance with requirements, available manufacturers offering products that may be incorporated into the Work include, but are not limited to the following:

a. Leviton Manufacturing Co., Inc.
b. Pass & Seymour; Legrand North America, LLC.
c. Wiring Device-Kellems; Hubbell Incorporated, Commercial and Industrial.
d. Or equal.

2. Description: Two pole, three wire, and self-grounding. Square face.
3. Configuration: NEMA WD 6, Configuration 5-20R.
4. Standards: Comply with UL 498.

B. Decorator Tamper-Resistant Duplex Receptacles, 125 V, 20 A

1. Manufacturers: Subject to compliance with requirements, available manufacturers offering products that may be incorporated into the Work include, but are not limited to the following:

a. Leviton Manufacturing Co., Inc.
b. Pass & Seymour; Legrand North America, LLC.
c. Wiring Device-Kellems; Hubbell Incorporated, Commercial and Industrial.
d. Or equal.

2. Description: Two pole, three wire, and self-grounding. Integral shutters that operate only when a plug is inserted in the receptacle. Square face.
3. Configuration: NEMA WD 6, Configuration 5-20R.
4. Standards: Comply with UL 498.
5. Marking: Listed and labeled as complying with NFPA 70, "Tamper-Resistant Receptacles" Article.

C. Decorator, Tamper- and Weather-Resistant, Duplex Receptacles, 125 V, 20 A

1. Manufacturers: Subject to compliance with requirements, available manufacturers offering products that may be incorporated into the Work include, but are not limited to the following:

a. Leviton Manufacturing Co., Inc.
b. Pass & Seymour; Legrand North America, LLC.

c. Wiring Device-Kellems; Hubbell Incorporated, Commercial and Industrial.
d. Or equal.

2. Description: Two pole, three wire, and self-grounding. Integral shutters that operate only when a plug is inserted in the receptacle. Square face.
3. Configuration: NEMA WD 6, Configuration 5-20R.
4. Standards: Comply with UL 498.
5. Marking: Listed and labeled as complying with NFPA 70, "Tamper-Resistant Receptacles" and "Receptacles in Damp or Wet Locations" articles.

D. Decorator Single-Pole Switches, 120/277 V, 20 A

1. Manufacturers: Subject to compliance with requirements, available manufacturers offering products that may be incorporated into the Work include, but are not limited to the following: (not used for lighting controls)

a. Leviton Manufacturing Co., Inc.
b. Pass & Seymour; Legrand North America, LLC.
c. Wiring Device-Kellems; Hubbell Incorporated, Commercial and Industrial.
d. Or equal.

2. Comply with UL 20.

E. Decorator Single-Pole Lighted Switches,120/277 V, 20 A

1. Manufacturers: Subject to compliance with requirements, available manufacturers offering products that may be incorporated into the Work include, but are not limited to the following:

a. Lutron.
b. Or approved equal.

2. Description: Square face illuminated when circuit is switched off.
3. Standards: Comply with UL 20.

F. Decorator, Antimicrobial, Single-Pole Switches, 120/277 V, 20 A

1. Manufacturers: Subject to compliance with requirements, available manufacturers offering products that may be incorporated into the Work include, but are not limited to the following:

2.
a. Lutron.
b. Or approved equal.

3. Description: Contact surfaces treated with a coating that kills 99.9 percent of certain common bacteria within two hours when regularly and properly cleaned.
4. Standards: Comply with UL 20 and FS W-S-896.

2.13 OCCUPANCY SENSORS

A. Wall Switch Sensor Light Switch, Dual Technology

1. Manufacturers: Subject to compliance with requirements, [provide products by the following] [provide products by one of the following] [available manufacturers offering products that may be incorporated into the Work include, but are not limited to, the following]:

a. Lutron.
b. Or approved equal.

2. Description: Switchbox-mounted, combination lighting-control sensor and conventional switch lighting-control unit using dual (ultrasonic and passive infrared) technology.
3. Standards: Comply with UL 20.
4. Rated 960 W at 120 V ac for tungsten lighting, 10 A at 120 V ac or 10 A at 277 V ac for fluorescent or LED lighting, and 1/4 hp at 120 V ac.
5. Adjustable time delay of [**20**] minutes.
6. Able to be locked to [**Automatic**] [**Manual**]-On mode.
7. Automatic Light-Level Sensor: Adjustable from 2 to 200 fc.
8. Connections: Provisions for connection to BAS.
9. Connections: RJ-45 communications outlet.
10. Connections: Integral wireless networking.

B. Wall Sensor Light Switch, Passive Infrared

1. Manufacturers: Subject to compliance with requirements, [provide products by the following] [provide products by one of the following] [available manufacturers offering products that may be incorporated into the Work include, but are not limited to, the following]:

   a. Lutron.
   b. Or approved equal.

2. Description: Switchbox-mounted, combination, lighting-control sensor and conventional switch lighting-control unit using passive infrared technology.
3. Standards: Comply with UL 20.
4. Connections: Provisions for connection to BAS.
5. Connections: Hard wired.
6. Connections: Wireless.
7. Rated 960 W at 120 V ac for tungsten lighting, 10 A at 120 V ac or 10 A at 277 V ac for fluorescent or LED lighting, and 1/4 hp at 120 V ac.
8. Integral relay for connection to BAS.
9. Adjustable time delay of [**20**] minutes.
10. Able to be locked to [**Automatic**] [**Manual**]-On mode.
11. Automatic Light-Level Sensor: Adjustable from 2 to 200 fc.

C. Wall Sensor Light Switch, Ultrasonic

1. Manufacturers: Subject to compliance with requirements, available manufacturers offering products that may be incorporated into the Work include, but are not limited to the following:

   a. Lutron.
   b. Or approved equal.

2. Description: Switchbox-mounted, combination, lighting-control sensor and conventional switch lighting-control unit using ultrasonic technology.
3. Standards: Comply with UL 20.
4. Connections: Provisions for connection to BAS.
5. Connections: RJ-45 communications outlet.
6. Connections: Integral wireless networking.
7. Rated 960 W at 120 V ac for tungsten lighting, 10 A at 120 V ac or 10 A at 277 V ac for fluorescent or LED lighting, and 1/4 hp at 120 V ac.
8. Integral relay for connection to BAS.
9. Adjustable time delay of [**20**] minutes.
10. Able to be locked to [**Automatic**] [**Manual**]-On mode.
11. Automatic Light-Level Sensor: Adjustable from 2 to 200 fc.

2.14 TIMER LIGHT SWITCH

A. Digital Timer Light Switch

1. Manufacturers: Subject to compliance with requirements, available manufacturers offering products that may be incorporated into the Work include, but are not limited to the following:

   a. Lutron.
   b. Or approved equal.

2. Description: Switchbox-mounted, combination digital timer and conventional switch lighting-control unit, with backlit digital display, with selectable time interval in [**20**]-minute increments.
3. Standards: Comply with UL 20.
4. Rated 960 W at 120 V ac for tungsten lighting, 10 A at 120 V ac or 10 A at 277 V ac for fluorescent or LED lighting, and 1/4 hp at 120 V ac.
5. Integral relay for connection to BAS.

2.15 DIMMERS

A. Wall-Box Dimmers:

1. Manufacturers: Subject to compliance with requirements, available manufacturers offering products that may be incorporated into the Work include, but are not limited to the following:

   a. Lutron.
   b. Or approved equal.

2. Description: Modular, full-wave, solid-state dimmer switch with integral, quiet on-off switches, with audible frequency and EMI/RFI suppression filters.
3. Control: Continuously adjustable [**slider**] [**toggle switch**]; with single-pole or three-way switching.
4. Standards: Comply with UL 1472.
5. Incandescent Lamp Dimmers: 120 V; control shall follow square-law dimming curve. On-off switch positions shall bypass dimmer module.

   a. 600 W; dimmers shall require no derating when ganged with other devices.[**Illuminated when "off."**]

6. Fluorescent Lamp Dimmer Switches: Modular; compatible with dimmer ballasts; trim potentiometer to adjust low-end dimming; dimmer-ballast combination capable of consistent dimming with low end not greater than 20 percent of full brightness.
7. LED Lamp Dimmer Switches: Modular; compatible with LED lamps; trim potentiometer to adjust low-end dimming; capable of consistent dimming with low end not greater than 20 percent of full brightness.

2.16 WALL PLATES

A. Single Source: Obtain wall plates from same manufacturer of wiring devices.

B. Single and combination types shall match corresponding wiring devices.

1. Plate-Securing Screws: Metal with head color to match plate finish.
2. Material for Finished Spaces: [**Steel with white baked enamel, suitable for field painting**] [**Smooth, high-impact thermoplastic**] [**0.035-inch- thick, satin-finished, Type 302 stainless steel**] [**0.04-inch- thick, brushed brass with factory polymer finish**] [**0.05-inch- thick, anodized aluminum**] [**0.04-inch- thick steel with chrome-plated finish**].
3. Material for Unfinished Spaces: [**Galvanized steel**] [**Smooth, high-impact thermoplastic**].
4. Material for Damp Locations: [**Thermoplastic**] [**Cast aluminum**] with spring-loaded lift cover, and listed and labeled for use in wet and damp locations.
5. Wet-Location, Weatherproof Cover Plates: NEMA 250, complying with Type 3R, weather-resistant[**, die-cast aluminum**] [**thermoplastic**] while in use lockable cover to comply with NEC 406.9.

C. Antimicrobial Cover Plates:

1. Contact surfaces treated with a coating that kills 99.9 percent of certain common bacteria within two hours when regularly and properly cleaned.
2. Tarnish resistant.

D. Final wall plate per architectural specifications/drawings.

2.17 FLOOR SERVICE FITTINGS

A. Flush-Type Floor Service Fittings:

1. Manufacturers: Subject to compliance with requirements, available manufacturers offering products that may be incorporated into the Work include, but are not limited to the following:

2.
   a. Wiremold; Legrand North America, LLC.
   b. Or equal.

3. Description: Type: Modular, flush-type, dual-service units suitable for wiring method used, with cover flush with finished floor.
4. Compartments: Barrier separates power from voice and data communication cabling.
5. Service Plate and Cover: [**Rectangular**] [**Round**], [**die-cast aluminum**] [**solid brass**] with satin finish.
6. Power Receptacle: NEMA WD 6 Configuration 5-20R, gray finish, unless otherwise indicated.
7. Data Communication Outlet: [**Blank cover with bushed cable opening.**] [**Two modular, keyed, color-coded, RJ-45 jacks for twisted pair cable.**]

B. Flap-Type Service Fittings:

1. Manufacturers: Subject to compliance with requirements, available manufacturers offering products that may be incorporated into the Work include, but are not limited to the following:

   a. Arrow Hart, Wiring Devices; Eaton, Electrical Sector.
   b. Hubbell Premise Wiring; Hubbell Incorporated, Commercial and Industrial.
   c. Wiremold; Legrand North America, LLC.
   d. Or equal.

2. Description: Type: Modular, flap-type, dual-service units suitable for wiring method used, with flaps flush with finished floor.
3. Compartments: Barrier separates power from voice and data communication cabling.
4. Flaps: [**Rectangular**] [**Round**], [**die-cast aluminum**] [**solid brass**] with satin finish.
5. Service Plate: Same finish as flaps.
6. Power Receptacle: NEMA WD 6 Configuration 5-20R, gray finish, unless otherwise indicated.
7. Data Communication Outlet: [**Blank cover with bushed cable opening.**] [**Two modular, keyed, color-coded, RJ-45 jacks for twisted pair cable.**

C. Above-Floor Service Fittings:

1. Manufacturers: Subject to compliance with requirements, available manufacturers offering products that may be incorporated into the Work include, but are not limited to the following:

   a. Arrow Hart, Wiring Devices; Eaton, Electrical Sector.
   b. Hubbell Premise Wiring; Hubbell Incorporated, Commercial and Industrial.
   c. Wiremold; Legrand North America, LLC.
   d. Or equal.

2. Description: Type: Modular, above-floor, dual-service units suitable for wiring method used.
3. Compartments: Barrier separates power from voice and data communication cabling.
4. Service Plate: [**Rectangular**] [**Round**], [**die-cast aluminum**] [**solid brass**] with satin finish.

5. Power Receptacle: NEMA WD 6 Configuration 5-20R, gray finish, unless otherwise indicated.
6. Data Communication Outlet: [**Blank cover with bushed cable opening.**] [**Two modular, keyed, color-coded, RJ-45 jacks for twisted pair cable.**

2.18 POKE-THROUGH ASSEMBLIES

A. Description: Factory-fabricated and -wired assembly of below-floor junction box with multichanneled, through-floor raceway/firestop unit and detachable matching floor service-outlet assembly.

B. Manufacturers: Subject to compliance with requirements, available manufacturers offering products that may be incorporated into the Work include, but are not limited to the following:

1. Square D; Schneider Electric USA.
2. Wiremold; Legrand North America, LLC.
3. Wiring Device-Kellems; Hubbell Incorporated, Commercial and Industrial.
4. Or equal.

C. Standards: Comply with scrub water exclusion requirements in UL 514.

D. Service-Outlet Assembly: [**Pedestal type with services indicated**] [**Flush type with two simplex receptacles and space for two RJ-45 jacks**] [**Flush type with four simplex receptacles and space for four RJ-45 jacks**]

E. Size: Selected to fit nominal [**3-inch**] [**4-inch**] cored holes in floor and matched to floor thickness.

F. Fire Rating: Unit is listed and labeled for fire rating of floor-ceiling assembly.

G. Closure Plug: Arranged to close unused [**3-inch**] [**4-inch**] cored openings and reestablish fire rating of floor.

H. Wiring Raceways and Compartments: For a minimum of four No. 12 AWG conductors and a minimum of [**two**] [**four**], four-pair cables.

2.19 PREFABRICATED MULTIOUTLET ASSEMBLIES

A. Description: Two-piece surface metal raceway, with factory-wired multioutlet harness.

B. Manufacturers: Subject to compliance with requirements, available manufacturers offering products that may be incorporated into the Work include, but are not limited to the following:

1. Mono-System Inc.
2. Wiremold; Legrand North America, LLC.
3. Wiring Device-Kellems; Hubbell Incorporated, Commercial and Industrial.
4. Or equal.

C. Components shall be products from single manufacturer designed for use as a complete, matching assembly of raceways and receptacles.

D. Raceway Material: [**Metal, with manufacturer's standard finish**]

E. Multioutlet Harness:

1. Receptacles: 20-A, 125-V, NEMA WD 6 Configuration 5-20R receptacles complying with NEMA WD 1, UL 498, and FS W-C-596.
2. Receptacle Spacing: [**6 inches**] [**9 inches**] [**12 inches**] [**18 inches**]; Final per architect approval.
3. Wiring: No. 12 AWG solid, Type THHN copper, [**single circuit**] [**two circuit, connecting alternating receptacles**].

2.20 EMERGENCY SHUTDOWN SWITCHES

A. Emergency Shutdown Pushbutton Switch: Square D. Co.'s Class 9001, Type K, pushbutton operator with the following:

1. Red mushroom button.
2. Transformer type red pilot light.
3. Legend red plate with words "Emerg. Stop".
4. NEMA 13 oil tight enclosure with cover riveted to boy

PART 3 - EXECUTION

3.1 INSTALLATION

A. Comply with NECA 1, including mounting heights listed in that standard, unless otherwise indicated.

B. Coordination with Other Trades:

1. Protect installed devices and their boxes. Do not place wall finish materials over device boxes, and do not cut holes for boxes with routers that are guided by riding against outside of boxes.
2. Keep outlet boxes free of plaster, drywall joint compound, mortar, cement, concrete, dust, paint, and other material that may contaminate the raceway system, conductors, and cables.
3. Install device boxes in brick or block walls so that the cover plate does not cross a joint unless the joint is troweled flush with the face of the wall.
4. Install wiring devices after all wall preparation, including painting, is complete.

C. Conductors:

1. Do not strip insulation from conductors until right before they are spliced or terminated on devices.
2. Strip insulation evenly around the conductor using tools designed for the purpose. Avoid scoring or nicking of solid wire or cutting strands from stranded wire.
3. The length of free conductors at outlets for devices shall comply with NFPA 70, Article 300, without pigtails.
4. Existing Conductors:

   a. Cut back and pigtail, or replace all damaged conductors.
   b. Straighten conductors that remain and remove corrosion and foreign matter.
   c. Pigtailing existing conductors is permitted, provided the outlet box is large enough.

D. Device Installation:

1. Replace devices that have been in temporary use during construction and that were installed before building finishing operations were complete.
2. Keep each wiring device in its package or otherwise protected until it is time to connect conductors.
3. Do not remove surface protection, such as plastic film and smudge covers, until the last possible moment.
4. Connect devices to branch circuits using pigtails that are not less than 6 inches in length.
5. When there is a choice, use side wiring with binding-head screw terminals. Wrap solid conductor tightly clockwise, two-thirds to three-fourths of the way around terminal screw.
6. Use a torque screwdriver when a torque is recommended or required by manufacturer.
7. When conductors larger than No. 12 AWG are installed on 15- or 20-A circuits, splice No. 12 AWG pigtails for device connections.
8. Tighten unused terminal screws on the device.
9. When mounting into metal boxes, remove the fiber or plastic washers used to hold device-mounting screws in yokes, allowing metal-to-metal contact.

E. Receptacle Orientation:

1. Install ground pin of vertically mounted receptacles [**down**], and on horizontally mounted receptacles to the [**left**](or otherwise directed for ease of use in field).

F. Device Plates: Do not use oversized or extra-deep plates. Repair wall finishes and remount outlet boxes when standard device plates do not fit flush or do not cover rough wall opening.

G. Dimmers:

1. Install dimmers within terms of their listing.
2. Verify that dimmers used for fan-speed control are listed for that application.
3. Install unshared neutral conductors on line and load side of dimmers according to manufacturers' device, listing conditions in the written instructions.

H. Arrangement of Devices: Unless otherwise indicated, mount flush, with long dimension vertical and with grounding terminal of receptacles on top. Group adjacent switches under single, multigang wall plates.

I. Adjust locations of floor service outlets and service poles to suit arrangement of partitions and furnishings.

3.2 GFCI RECEPTACLES

A. Install non-feed-through GFCI receptacles where protection of downstream receptacles is not required.

3.3 SPECIFIC PURPOSE OUTLET BOXES

A. As fabricated by manufacturers for mounting their equipment.

3.4 IDENTIFICATION

A. Identify each receptacle with panelboard identification and circuit number. Use hot, stamped, or engraved machine printing with [**black**] -filled lettering on face of plate, and durable wire markers or tags inside outlet boxes.

B. Essential Electrical System: Mark receptacles supplied from the essential electrical system to allow easy identification using a self-adhesive label.

3.5 FIELD QUALITY CONTROL

A. Test Instruments: Use instruments that comply with UL 1436.

B. Test Instrument for Receptacles: Digital wiring analyzer with digital readout or illuminated digital-display indicators of measurement.

C. Perform the following tests and inspections[**with the assistance of Company Service Advisor**]:

1. In healthcare facilities, prepare reports that comply with NFPA 99.
2. Test Instruments: Use instruments that comply with UL 1436.
3. Test Instrument for Receptacles: Digital wiring analyzer with digital readout or illuminated digital-display indicators of measurement.

D. Tests for Receptacles:

1. Line Voltage: Acceptable range is 105 to 132 V.

2. Percent Voltage Drop under 15-A Load: A value of 6 percent or higher is unacceptable.
3. Ground Impedance: Values of up to 2 ohms are acceptable.
4. GFCI Trip: Test for tripping values specified in UL 1436 and UL 943.
5. Using the test plug, verify that the device and its outlet box are securely mounted.
6. Tests shall be diagnostic, indicating damaged conductors, high resistance at the circuit breaker, poor connections, inadequate fault-current path, defective devices, or similar problems. Correct circuit conditions, remove malfunctioning units and replace with new ones, and retest as specified above.

E. Wiring device will be considered defective if it does not pass tests and inspections.

F. Prepare test and inspection reports.

END OF SECTION 262726

SECTION 262816

ENCLOSED SWITCHES AND CIRCUIT BREAKERS

PART 1 - GENERAL

1.1 RELATED DOCUMENTS

A. Drawings and general provisions of the Contract, including General and Supplementary Conditions and other Division 01 Specification Sections, apply to this Section.

1.2 SUMMARY

A. Section Includes:

1. Fusible switches.
2. Nonfusible switches.
3. Receptacle switches.
4. Shunt trip switches.
5. Molded-case circuit breakers (MCCBs).
6. Molded-case switches.
7. Enclosures.

1.3 DEFINITIONS

A. NC: Normally closed.

B. NO: Normally open.

C. SPDT: Single pole, double throw.

1.4 SUBMITTALS

A. Submittals for this section are subject to the re-evaluation fee identified in Article 4 of the General Conditions.

B. Manufacturer’s installation instructions shall be provided along with product data.

C. Submittals shall be provided in the order in which they are specified and tabbed (for combined submittals).

D. Product Data: For each type of enclosed switch, circuit breaker, accessory, and component indicated. Include nameplate ratings, dimensioned elevations, sections, weights, and manufacturers' technical data on features, performance, electrical characteristics, ratings, accessories, and finishes.

1. Enclosure types and details for types other than NEMA 250, Type 1.
2. Current and voltage ratings.
3. Short-circuit current ratings (interrupting and withstand, as appropriate).
4. Include evidence of a nationally recognized testing laboratory (NRTL) listing for series rating of installed devices.
5. Detail features, characteristics, ratings, and factory settings of individual overcurrent protective devices, accessories, and auxiliary components.

6. Include time-current coordination curves (average melt) for each type and rating of overcurrent protective device; include selectable ranges for each type of overcurrent protective device. Provide in [**PDF**] format.

E. Shop Drawings: For enclosed switches and circuit breakers.

1. Include plans, elevations, sections, details, and attachments to other work.
2. Include wiring diagrams for power, signal, and control wiring.

F. Submittals for this section are subject to the re-evaluation fee identified in Article 4 of the General Conditions.

G. Qualification Data: For qualified testing agency.

H. Seismic Qualification Data: Certificates, for enclosed switches and circuit breakers, accessories, and components, from manufacturer.

1. Basis for Certification: Indicate whether withstand certification is based on actual test of assembled components or on calculation.
2. Dimensioned Outline Drawings of Equipment Unit: Identify center of gravity and locate and describe mounting and anchorage provisions.
3. Detailed description of equipment anchorage devices on which the certification is based and their installation requirements.

I. Field quality-control reports.

1.5 CLOSEOUT SUBMITTALS

A. Operation and Maintenance Data: For enclosed switches and circuit breakers to include in emergency, operation, and maintenance manuals.

1. Manufacturer's written instructions for testing and adjusting enclosed switches and circuit breakers.
2. Time-current coordination curves (average melt) for each type and rating of overcurrent protective device; include selectable ranges for each type of overcurrent protective device. Provide in [**PDF**] format.

1.6 MAINTENANCE MATERIAL SUBMITTALS

A. Furnish extra materials that match products installed and that are packaged with protective covering for storage and identified with labels describing contents.

1. Fuses: Equal to [**10**] percent of quantity installed for each size and type, but no fewer than [**three** of each size and type.
2. Fuse Pullers: [**Two**for each size and type.

1.7 QUALITY ASSURANCE

A. Testing Agency Qualifications: Accredited by NETA.

1. Testing Agency's Field Supervisor: Currently certified by NETA to supervise on-site testing.

1.8 FIELD CONDITIONS

A. Environmental Limitations: Rate equipment for continuous operation under the following conditions unless otherwise indicated:

1. Ambient Temperature: Not less than minus 22 deg F and not exceeding 104 deg F.
2. Altitude: Not exceeding 6600 feet.

1.9 WARRANTY

A. Manufacturer's Warranty: Manufacturer and Installer agree to repair or replace components that fail in materials or workmanship within specified warranty period.

1. Warranty Period: [**One**] year(s) from date of Substantial Completion.

PART 2 - PRODUCTS

2.1 PERFORMANCE REQUIREMENTS

A. Seismic Performance: Enclosed switches and circuit breakers shall withstand the effects of earthquake motions determined according to [**ASCE/SEI 7**].

1. The term "withstand" means "the unit will remain in place without separation of any parts from the device when subjected to the seismic forces specified[**and the unit will be fully operational after the seismic event**]."

2.2 GENERAL REQUIREMENTS

A. Source Limitations: Obtain enclosed switches and circuit breakers, overcurrent protective devices, components, and accessories, within same product category, from single manufacturer.

B. Product Selection for Restricted Space: Drawings indicate maximum dimensions for enclosed switches and circuit breakers, including clearances between enclosures, and adjacent surfaces and other items. Comply with indicated maximum dimensions.

C. Electrical Components, Devices, and Accessories: Listed and labeled as defined in NFPA 70, by an NRTL, and marked for intended location and application.

D. Comply with NFPA 70.

2.3 FUSIBLE SWITCHES

A. Manufacturers: Subject to compliance with requirements, [provide products by the following] [provide products by one of the following] [available manufacturers offering products that may be incorporated into the Work include, but are not limited to, the following]:

1. Eaton.
2. Schneider Electric USA (Square D).
3. Siemens Industry, Inc., Energy Management Division.
4. Or equal.

B. Type HD, Heavy Duty:

1. [**Single**] [**Double**] throw.
2. [**Three**] [**six**] pole.
3. [**240**] [**600**]-V ac.
4. [**600 A and smaller**]

5. UL 98 and NEMA KS 1, horsepower rated, with clips or bolt pads to accommodate [**specified**] [**indicated**] fuses.
6. Lockable handle with capability to accept three padlocks, and interlocked with cover in closed position.

C. Accessories:

1. Equipment Ground Kit: Internally mounted and labeled for copper and aluminum ground conductors.
2. Neutral Kit: Internally mounted; insulated, capable of being grounded and bonded; labeled for copper and aluminum neutral conductors.
3. Isolated Ground Kit: Internally mounted; insulated, labeled for copper and aluminum neutral conductors.
4. Class R Fuse Kit: Provides rejection of other fuse types when Class R fuses are specified.
5. Auxiliary Contact Kit: [**One**] [**Two**] NO/NC (Form "C") auxiliary contact(s), arranged to activate before switch blades open. Contact rating **-** [**24-V ac**] [**120-V ac**] [**208-V ac**] [**240-V ac**] [**6-V dc**] [**12-V dc**] [**24-V dc**].
6. Hookstick Handle: Allows use of a hookstick to operate the handle.
7. Lugs: [**Mechanical**] [**Compression**] type, suitable for number, size, and conductor material.
8. Service-Rated Switches: Labeled for use as service equipment.

2.4 NONFUSIBLE SWITCHES

A. Manufacturers: Subject to compliance with requirements, [provide products by the following] [provide products by one of the following] [available manufacturers offering products that may be incorporated into the Work include, but are not limited to, the following]:

1. Eaton.
2. Schneider Electric USA (Square D).
3. Siemens Industry, Inc., Energy Management Division.
4. Or equal.

B. Type GD, General Duty, Three Pole, Single Throw, 240-V ac, 600 A and Smaller: UL 98 and NEMA KS 1, horsepower rated, lockable handle with capability to accept two padlocks, and interlocked with cover in closed position.

C. Type HD, Heavy Duty, Three Pole, Single Throw, [**240**] [**600**]-V ac, 1200 A and Smaller: UL 98 and NEMA KS 1, horsepower rated, lockable handle with capability to accept three padlocks, and interlocked with cover in closed position.

D. Type HD, Heavy Duty, Six Pole, Single Throw, [**240**] [**600**]-V ac, 200 A and Smaller: UL 98 and NEMA KS 1, horsepower rated, lockable handle with capability to accept three padlocks, and interlocked with cover in closed position.

E. Type HD, Heavy Duty, Three Pole, Double Throw, [**240**] [**600**]-V ac, 1200 A and Smaller: UL 98 and NEMA KS 1, horsepower rated, lockable handle with capability to accept three padlocks, and interlocked with cover in closed position.

F. Accessories:

1. Equipment Ground Kit: Internally mounted and labeled for copper and aluminum ground conductors.
2. Neutral Kit: Internally mounted; insulated, capable of being grounded and bonded; labeled for copper and aluminum neutral conductors.
3. Isolated Ground Kit: Internally mounted; insulated, labeled for copper and aluminum neutral conductors.
4. Class R Fuse Kit: Provides rejection of other fuse types when Class R fuses are specified.
5. Auxiliary Contact Kit: [**One**] [**Two**] NO/NC (Form "C") auxiliary contact(s), arranged to activate before switch blades open. Contact rating **-** [**24-V ac**] [**120-V ac**] [**208-V ac**] [**240-V ac**] [**6-V dc**] [**12-V dc**] [**24-V dc**].
6. Hookstick Handle: Allows use of a hookstick to operate the handle.
7. Lugs: [**Mechanical**] [**Compression**] type, suitable for number, size, and conductor material.
8. Service-Rated Switches: Labeled for use as service equipment.

2.5 RECEPTACLE SWITCHES

A. Manufacturers: Subject to compliance with requirements, [provide products by the following] [provide products by one of the following] [available manufacturers offering products that may be incorporated into the Work include, but are not limited to, the following]:

1. Eaton.
2. Schneider Electric USA (Square D).
3. Siemens Industry, Inc., Energy Management Division.
4. Or equal.

B. Type HD, Heavy-Duty, Three Pole, Single-Throw Fusible Switch: [**240**] [**600**]-V ac, [**30**] [**60**] [**100**] <**Insert amperage**> A; UL 98 and NEMA KS 1; horsepower rated, with clips or bolt pads to accommodate [**specified**] [**indicated**] fuses; lockable handle with capability to accept three padlocks; interlocked with cover in closed position.

C. Type HD, Heavy-Duty, Three Pole, Single-Throw Nonfusible Switch: [**240**] [**600**]-V ac, [**30**] [**60**] [**100**] <**Insert amperage**> A; UL 98 and NEMA KS 1; horsepower rated, lockable handle with capability to accept three padlocks; interlocked with cover in closed position.

D. Interlocking Linkage: Provided between the receptacle and switch mechanism to prevent inserting or removing plug while switch is in the on position, inserting any plug other than specified, and turning switch on if an incorrect plug is inserted or correct plug has not been fully inserted into the receptacle.

E. Receptacle: Polarized, three-phase, four-wire receptacle (fourth wire connected to enclosure ground lug).

F. Accessories:

1. Equipment Ground Kit: Internally mounted and labeled for copper and aluminum ground conductors.
2. Neutral Kit: Internally mounted; insulated, capable of being grounded and bonded; labeled for copper and aluminum neutral conductors.
3. Isolated Ground Kit: Internally mounted; insulated, labeled for copper and aluminum neutral conductors.
4. Class R Fuse Kit: Provides rejection of other fuse types when Class R fuses are specified.
5. Auxiliary Contact Kit: [**One**] [**Two**] NO/NC (Form "C") auxiliary contact(s), arranged to activate before switch blades open. Contact rating - [**24-V ac**] [**120-V ac**] [**208-V ac**] [**240-V ac**] [**6-V dc**] [**12-V dc**] [**24-V dc**].
6. Hookstick Handle: Allows use of a hookstick to operate the handle.
7. Lugs: [**Mechanical**] [**Compression**] type, suitable for number, size, and conductor material.
8. Service-Rated Switches: Labeled for use as service equipment.

2.6 SHUNT TRIP SWITCHES

A. Manufacturers: Subject to compliance with requirements, [provide products by the following] [provide products by one of the following] [available manufacturers offering products that may be incorporated into the Work include, but are not limited to, the following]:

1. Bussmann; Eaton, Electrical Sector.
2. Littelfuse, Inc.
3. Mersen USA.
4. Or equal.

B. General Requirements: Comply with[**ASME A17.1,**] UL 50, and UL 98, with Class J fuse block and 200-kA interrupting and short-circuit current rating.

C. Type HD, Heavy-Duty, Three Pole, Single-Throw Fusible Switch: [**240**] [**600**]-V ac, [**30**] [**60**] [**100**] A; UL 98 and NEMA KS 1; integral shunt trip mechanism; horsepower rated, with clips or bolt pads to accommodate [**specified**] [**indicated**] fuses; lockable handle with capability to accept three padlocks; interlocked with cover in closed position.

D. Type HD, Heavy-Duty, Three Pole, Single-Throw Nonfusible Switch: [**240**] [**600**]-V ac, [**30**] [**60**] [**100**] A; UL 98 and NEMA KS 1; integral shunt trip mechanism; horsepower rated, lockable handle with capability to accept three padlocks; interlocked with cover in closed position.

E. Control Circuit: 120-V ac; obtained from [**integral control power transformer, with primary and secondary fuses,**] <**Insert source of control power**> with a control power [**transformer**] [**source**] of enough capacity to operate shunt trip, pilot, indicating and control devices.

F. Accessories:

1. Oiltight key switch for key-to-test function.
2. Oiltight [**red**] [**green**] [**white**] [**yellow**] ON pilot light.
3. Isolated neutral lug; [**100**] [**200**] percent rating.
4. Mechanically interlocked auxiliary contacts that change state when switch is opened and closed.
5. Form C alarm contacts that change state when switch is tripped.
6. Three-pole, double-throw, fire-safety and alarm relay; [**120-V ac**] [**24-V dc**] coil voltage.
7. Three-pole, double-throw, fire-alarm voltage monitoring relay complying with NFPA 72.
8. Neutral Kit: Internally mounted; insulated, capable of being grounded and bonded; labeled for copper and aluminum neutral conductors.
9. Isolated Ground Kit: Internally mounted; insulated, labeled for copper and aluminum neutral conductors.
10. Class R Fuse Kit: Provides rejection of other fuse types when Class R fuses are specified.
11. Auxiliary Contact Kit: [**One**] [**Two**] NO/NC (Form "C") auxiliary contact(s), arranged to activate before switch blades open. Contact rating **-** [**24-V ac**] [**120-V ac**] [**208-V ac**] [**240-V ac**] [**6-V dc**] [**12-V dc**] [**24-V dc**].
12. Hookstick Handle: Allows use of a hookstick to operate the handle.
13. Lugs: [**Mechanical**] [**Compression**] type, suitable for number, size, and conductor material.
14. Service-Rated Switches: Labeled for use as service equipment.

2.7 MOLDED-CASE CIRCUIT BREAKERS

A. Manufacturers: Subject to compliance with requirements, [provide products by the following] [provide products by one of the following] [available manufacturers offering products that may be incorporated into the Work include, but are not limited to, the following]:

1. Eaton.
2. Schneider Electric USA (Square D).
3. Siemens Industry, Inc., Energy Management Division.
4. Or equal.

B. Circuit breakers shall be constructed using glass-reinforced insulating material. Current carrying components shall be completely isolated from the handle and the accessory mounting area.

C. Circuit breakers shall have a toggle operating mechanism with common tripping of all poles, which provides quick-make, quick-break contact action. The circuit-breaker handle shall be over center, be trip free, and reside in a tripped position between on and off to provide local trip indication. Circuit-breaker escutcheon shall be clearly marked on and off in addition to providing international I/O markings. Equip circuit breaker with a push-to-trip button, located on the face of the circuit breaker to mechanically operate the circuit-breaker tripping mechanism for maintenance and testing purposes.

D. The maximum ampere rating and UL, IEC, or other certification standards with applicable voltage systems and corresponding interrupting ratings shall be clearly marked on face of circuit breaker. Circuit breakers shall be [**100 percent rated**][**series rated**][**100 percent rated or series rated as indicated on the Drawings**]. [**Circuit breaker/circuit breaker**] [**Fuse/circuit breaker**] combinations for series connected interrupting ratings shall be listed by UL as recognized component combinations. Any series rated combination used shall be marked on the end-use equipment along with the statement "Caution - Series Rated System. _____ Amps Available. Identical Replacement Component Required."

E. MCCBs shall be equipped with a device for locking in the isolated position.

F. Lugs shall be suitable for [**140 deg F rated wire on 125-A circuit breakers and below**] [**167 deg F rated wire**] [**194 deg F rated wire, sized according to the 167 deg F temperature rating in NFPA 70**].

G. Standard: Comply with UL 489 with interrupting capacity to comply with available fault currents.

H. Thermal-Magnetic Circuit Breakers: Inverse time-current thermal element for low-level overloads and instantaneous magnetic trip element for short circuits. Adjustable magnetic trip setting for circuit-breaker frame sizes 250 A and larger.

I. Adjustable, Instantaneous-Trip Circuit Breakers: Magnetic trip element with front-mounted, field-adjustable trip setting.

J. Electronic Trip Circuit Breakers: Field-replaceable rating plug, rms sensing, with the following field-adjustable settings:

1. Instantaneous trip.
2. Long- and short-time pickup levels.
3. Long- and short-time time adjustments.
4. Ground-fault pickup level, time delay, and I-squared t response.

K. Current-Limiting Circuit Breakers: Frame sizes 400 A and smaller, and let-through ratings less than NEMA FU 1, RK-5.

L. Integrally Fused Circuit Breakers: Thermal-magnetic trip element with integral limiter-style fuse listed for use with circuit breaker and trip activation on fuse opening or on opening of fuse compartment door.

M. Ground-Fault Circuit-Interrupter (GFCI) Circuit Breakers: Single- and two-pole configurations with Class A ground-fault protection (6-mA trip).

N. Ground-Fault Equipment-Protection (GFEP) Circuit Breakers: With Class B ground-fault protection (30-mA trip).

O. Features and Accessories:

1. Standard frame sizes, trip ratings, and number of poles.
2. Lugs: [**Mechanical**] [**Compression**] type, suitable for number, size, trip ratings, and conductor material.
3. Application Listing: Appropriate for application; Type SWD for switching fluorescent lighting loads; Type HID for feeding fluorescent and high-intensity discharge lighting circuits.
4. Ground-Fault Protection: Comply with UL 1053; [**integrally mounted, self-powered**] [**remote-mounted and powered**] type with mechanical ground-fault indicator; relay with adjustable pickup and time-delay settings, push-to-test feature, internal memory, and shunt trip unit; and three-phase, zero-sequence current transformer/sensor.
5. Shunt Trip: Trip coil energized from separate circuit, with coil-clearing contact.
6. Undervoltage Trip: Set to operate at 35 to 75 percent of rated voltage without intentional time delay.
7. Auxiliary Contacts: [**One SPDT switch**] [**Two SPDT switches**] with "a" and "b" contacts; "a" contacts mimic circuit-breaker contacts, "b" contacts operate in reverse of circuit-breaker contacts.
8. Alarm Switch: One [**NO**] [**NC**] contact that operates only when circuit breaker has tripped.
9. Key Interlock Kit: Externally mounted to prohibit circuit-breaker operation; key shall be removable only when circuit breaker is in off position.
10. Zone-Selective Interlocking: Integral with [**electronic**] [**ground-fault**] trip unit; for interlocking ground-fault protection function.
11. Electrical Operator: Provide remote control for on, off, and reset operations.
12. Accessory Control Power Voltage: [**Integrally mounted, self-powered**] [**Remote mounted and powered**]; [**24-V ac**] [**120-V ac**] [**208-V ac**] [**240-V ac**] [**12-V dc**] [**24-V dc**] [**120-V dc**].

2.8 MOLDED-CASE SWITCHES

A. Manufacturers: Subject to compliance with requirements, [provide products by the following] [provide products by one of the following] [available manufacturers offering products that may be incorporated into the Work include, but are not limited to, the following]:

1. Eaton.
2. Schneider Electric USA (Square D).
3. Siemens Industry, Inc., Energy Management Division.
4. Or equal.

B. Description: MCCB with fixed, high-set instantaneous trip only, and short-circuit withstand rating equal to equivalent breaker frame size interrupting rating.

C. Standard: Comply with UL 489 with interrupting capacity to comply with available fault currents.

D. Features and Accessories:

1. Standard frame sizes and number of poles.
2. Lugs:

a. [**Mechanical**] [**Compression**] type, suitable for number, size, trip ratings, and conductor material.
b. Lugs shall be suitable for [**140 deg F rated wire on 125-A circuit breakers and below**] [**167 deg F rated wire**] [**194 deg F rated wire, sized according to the 167 deg F temperature rating in NFPA 70**].

3. Ground-Fault Protection: Comply with UL 1053; remote-mounted and powered type with mechanical ground-fault indicator; relay with adjustable pickup and time-delay settings, push-to-test feature, internal memory, and shunt trip unit; and three-phase, zero-sequence current transformer/sensor.
4. Shunt Trip: Trip coil energized from separate circuit, with coil-clearing contact.
5. Undervoltage Trip: Set to operate at 35 to 75 percent of rated voltage without intentional time delay.
6. Auxiliary Contacts: [**One SPDT switch**] [**Two SPDT switches**] with "a" and "b" contacts; "a" contacts mimic switch contacts, "b" contacts operate in reverse of switch contacts.
7. Alarm Switch: One [**NO**] [**NC**] contact that operates only when switch has tripped.
8. Key Interlock Kit: Externally mounted to prohibit switch operation; key shall be removable only when switch is in off position.
9. Zone-Selective Interlocking: Integral with ground-fault shunt trip unit; for interlocking ground-fault protection function.
10. Electrical Operator: Provide remote control for on, off, and reset operations.
11. Accessory Control Power Voltage: [**Integrally mounted, self-powered**] [**Remote mounted and powered**]; [**24-V ac**] [**120-V ac**] [**208-V ac**] [**240-V ac**] [**12-V dc**] [**24-V dc**] [**120-V dc**].

2.9 ENCLOSURES

A. Enclosed Switches and Circuit Breakers: UL 489, NEMA KS 1, NEMA 250, and UL 50, to comply with environmental conditions at installed location.

B. Enclosure Finish: The enclosure shall be [**finished with**] [**gray baked enamel paint, electrodeposited on cleaned, phosphatized steel (NEMA 250 Type 1)**] [**gray baked enamel paint, electrodeposited on cleaned, phosphatized galvannealed steel (NEMA 250 Types 3R, 12)**] [**a brush finish on Type 304 stainless steel (NEMA 250 Type 4-4X stainless steel)**] [**copper-free cast aluminum alloy (NEMA 250 Types 7, 9)**].

C. Conduit Entry: NEMA 250 Types 4, 4X, and 12 enclosures shall contain no knockouts. NEMA 250 Types 7 and 9 enclosures shall be provided with threaded conduit openings in both endwalls.

D. Operating Mechanism: The circuit-breaker operating handle shall be [**externally operable with the operating mechanism being an integral part of the box, not the cover**] [**directly operable through the front cover of the**

enclosure (NEMA 250 Type 1)] [**directly operable through the dead front trim of the enclosure (NEMA 250 Type 3R)**] [**externally operable with the operating mechanism being an integral part of the cover (NEMA 250 Types 7, 9)**]. The cover interlock mechanism shall have an externally operated override. The override shall not permanently disable the interlock mechanism, which shall return to the locked position once the override is released. The tool used to override the cover interlock mechanism shall not be required to enter the enclosure in order to override the interlock.

E. Enclosures designated as NEMA 250 Type 4, 4X stainless steel, 12, or 12K shall have a dual cover interlock mechanism to prevent unintentional opening of the enclosure cover when the circuit breaker is ON and to prevent turning the circuit breaker ON when the enclosure cover is open.

F. NEMA 250 Type 7/9 enclosures shall be furnished with a breather and drain kit to allow their use in outdoor and wet location applications.

PART 3 - EXECUTION

3.1 EXAMINATION

A. Examine elements and surfaces to receive enclosed switches and circuit breakers for compliance with installation tolerances and other conditions affecting performance of the Work.

B. Proceed with installation only after unsatisfactory conditions have been corrected.

1. Commencement of work shall indicate Installer's acceptance of the areas and conditions as satisfactory.

3.2 PREPARATION

A. Interruption of Existing Electric Service: Do not interrupt electric service to facilities occupied by Director's Representative or others unless permitted under the following conditions and then only after arranging to provide temporary electric service according to requirements indicated:

1. Notify [**Architect**] [**Construction Manager**] [Owner**'s Representative**] no fewer than [**seven**] <**Insert number**> days in advance of proposed interruption of electric service.
2. Indicate method of providing temporary electric service.
3. Do not proceed with interruption of electric service without [**Architect's**] [**Construction Manager's**] [Owner**'s Representative's**] written permission.
4. Comply with NFPA 70E.

3.3 ENCLOSURE ENVIRONMENTAL RATING APPLICATIONS

A. Enclosed Switches and Circuit Breakers: Provide enclosures at installed locations with the following environmental ratings.

1. Indoor, Dry and Clean Locations: NEMA 250, [**Type 1**] .
2. Outdoor Locations: NEMA 250, [**Type 3R**] [**Type 4X**]
3. Other Wet or Damp, Indoor Locations: NEMA 250, [**Type 4**]
4. Indoor Locations Subject to Dust, Falling Dirt, and Dripping Noncorrosive Liquids: NEMA 250, Type 12.
5. Hazardous Areas Indicated on Drawings: NEMA 250, [**Type 7**] [**Type 9**] [**with cover attached by Type 316 stainless steel bolts**].

3.4 INSTALLATION

A. Coordinate layout and installation of switches, circuit breakers, and components with equipment served and adjacent surfaces. Maintain required workspace clearances and required clearances for equipment access doors and panels.

B. Install individual wall-mounted switches and circuit breakers with tops at uniform height unless otherwise indicated.

C. Temporary Lifting Provisions: Remove temporary lifting of eyes, channels, and brackets and temporary blocking of moving parts from enclosures and components.

D. Install fuses in fusible devices.

E. Comply with NFPA 70 and NECA 1.

3.5 IDENTIFICATION

A. Identify field-installed conductors, interconnecting wiring, and components; provide warning signs.

B. Label each enclosure with engraved metal or laminated-plastic nameplate.

3.6 FIELD QUALITY CONTROL

A. Testing Agency: Director’s Representative will engage a qualified testing agency to perform tests and inspections.

B. Testing Agency: Engage a qualified testing agency to perform tests and inspections.

C. Manufacturer's Field Service: Engage a Company Service Advisor to test and inspect components, assemblies, and equipment installations, including connections.

D. Perform tests and inspections[**with the assistance of a Company Service Advisor**].

E. Tests and Inspections for Switches:

1. Visual and Mechanical Inspection:

a. Inspect physical and mechanical condition.
b. Inspect anchorage, alignment, grounding, and clearances.
c. Verify that the unit is clean.
d. Verify blade alignment, blade penetration, travel stops, and mechanical operation.
e. Verify that fuse sizes and types match the Specifications and Drawings.
f. Verify that each fuse has adequate mechanical support and contact integrity.
g. Inspect bolted electrical connections for high resistance using one of the two following methods:

1) Use a low-resistance ohmmeter.

a) Compare bolted connection resistance values to values of similar connections. Investigate values that deviate from those of similar bolted connections by more than 50 percent of the lowest value.

2) Verify tightness of accessible bolted electrical connections by calibrated torque-wrench method in accordance with manufacturer's published data or NETA ATS Table 100.12.

a) Bolt-torque levels shall be in accordance with manufacturer's published data. In the absence of manufacturer's published data, use NETA ATS Table 100.12.

h. Verify that operation and sequencing of interlocking systems is as described in the Specifications and shown on the Drawings.
i. Verify correct phase barrier installation.
j. Verify lubrication of moving current-carrying parts and moving and sliding surfaces.

2. Electrical Tests:

a. Perform resistance measurements through bolted connections with a low-resistance ohmmeter. Compare bolted connection resistance values to values of similar connections. Investigate values that deviate from adjacent poles or similar switches by more than 50 percent of the lowest value.
b. Measure contact resistance across each switchblade fuseholder. Drop values shall not exceed the high level of the manufacturer's published data. If manufacturer's published data are not available, investigate values that deviate from adjacent poles or similar switches by more than 50 percent of the lowest value.
c. Perform insulation-resistance tests for one minute on each pole, phase-to-phase and phase-to-ground with switch closed, and across each open pole. Apply voltage in accordance with manufacturer's published data. In the absence of manufacturer's published data, use Table 100.1 from the NETA ATS. Investigate values of insulation resistance less than those published in Table 100.1 or as recommended in manufacturer's published data.
d. Measure fuse resistance. Investigate fuse-resistance values that deviate from each other by more than 15 percent.
e. Perform ground fault test according to NETA ATS 7.14 "Ground Fault Protection Systems, Low-Voltage."

F. Tests and Inspections for Molded Case Circuit Breakers:

1. Visual and Mechanical Inspection:

a. Verify that equipment nameplate data are as described in the Specifications and shown on the Drawings.
b. Inspect physical and mechanical condition.
c. Inspect anchorage, alignment, grounding, and clearances.
d. Verify that the unit is clean.
e. Operate the circuit breaker to ensure smooth operation.
f. Inspect bolted electrical connections for high resistance using one of the two following methods:

1) Use a low-resistance ohmmeter.

a) Compare bolted connection resistance values to values of similar connections. Investigate values that deviate from those of similar bolted connections by more than 50 percent of the lowest value.

2) Verify tightness of accessible bolted electrical connections by calibrated torque-wrench method in accordance with manufacturer's published data or NETA ATS Table 100.12.

a) Bolt-torque levels shall be in accordance with manufacturer's published data. In the absence of manufacturer's published data, use NETA ATS Table 100.12.

g. Inspect operating mechanism, contacts, and chutes in unsealed units.
h. Perform adjustments for final protective device settings in accordance with the coordination study.

2. Electrical Tests:

a. Perform resistance measurements through bolted connections with a low-resistance ohmmeter. Compare bolted connection resistance values to values of similar connections. Investigate values that deviate from adjacent poles or similar switches by more than 50 percent of the lowest value.
b. Perform insulation-resistance tests for one minute on each pole, phase-to-phase and phase-to-ground with circuit breaker closed, and across each open pole. Apply voltage in accordance with manufacturer's published data. In the absence of manufacturer's published data, use Table 100.1 from

the NETA ATS. Investigate values of insulation resistance less than those published in Table 100.1 or as recommended in manufacturer's published data.

c. Perform a contact/pole resistance test. Drop values shall not exceed the high level of the manufacturer's published data. If manufacturer's published data are not available, investigate values that deviate from adjacent poles or similar switches by more than 50 percent of the lowest value.

d. Perform insulation resistance tests on all control wiring with respect to ground. Applied potential shall be 500-V dc for 300-V rated cable and 1000-V dc for 600-V rated cable. Test duration shall be one minute. For units with solid state components, follow manufacturer's recommendation. Insulation resistance values shall be no less than two megohms.

e. Determine the following by primary current injection:

1) Long-time pickup and delay. Pickup values shall be as specified. Trip characteristics shall not exceed manufacturer's published time-current characteristic tolerance band, including adjustment factors.

2) Short-time pickup and delay. Short-time pickup values shall be as specified. Trip characteristics shall not exceed manufacturer's published time-current characteristic tolerance band, including adjustment factors.

3) Ground-fault pickup and time delay. Ground-fault pickup values shall be as specified. Trip characteristics shall not exceed manufacturer's published time-current characteristic tolerance band, including adjustment factors.

4) Instantaneous pickup. Instantaneous pickup values shall be as specified and within manufacturer's published tolerances.

f. Test functionality of the trip unit by means of primary current injection. Pickup values and trip characteristics shall be as specified and within manufacturer's published tolerances.

g. Perform minimum pickup voltage tests on shunt trip and close coils in accordance with manufacturer's published data. Minimum pickup voltage of the shunt trip and close coils shall be as indicated by manufacturer.

h. Verify correct operation of auxiliary features such as trip and pickup indicators; zone interlocking; electrical close and trip operation; trip-free, anti-pump function; and trip unit battery condition. Reset all trip logs and indicators. Investigate units that do not function as designed.

i. Verify operation of charging mechanism. Investigate units that do not function as designed.

3. Correct malfunctioning units on-site, where possible, and retest to demonstrate compliance; otherwise, replace with new units and retest.

4. Perform the following infrared scan tests and inspections and prepare reports:

a. Initial Infrared Scanning: After Substantial Completion, but not more than 60 days after Final Acceptance, perform an infrared scan of each enclosed switch and circuit breaker. Remove front panels so joints and connections are accessible to portable scanner.

b. Follow-up Infrared Scanning: Perform an additional follow-up infrared scan of each enclosed switch and circuit breaker 11 months after date of Substantial Completion.

c. Instruments and Equipment: Use an infrared scanning device designed to measure temperature or to detect significant deviations from normal values. Provide calibration record for device.

5. Test and adjust controls, remote monitoring, and safeties. Replace damaged and malfunctioning controls and equipment.

G. Enclosed switches and circuit breakers will be considered defective if they do not pass tests and inspections.

H. Prepare test and inspection reports.

1. Test procedures used.
2. Include identification of each enclosed switch and circuit breaker tested and describe test results.
3. List deficiencies detected, remedial action taken, and observations after remedial action.

3.7 ADJUSTING

A. Adjust moving parts and operable components to function smoothly, and lubricate as recommended by manufacturer.

B. Set field-adjustable circuit-breaker trip ranges[**to values indicated on the Drawings.**] [**to values indicated in attached schedule.**]

END OF SECTION 262816

SECTION 263213

GAS-ENGINE-DRIVEN GENERATOR SETS

PART 1 - GENERAL

1.1 RELATED DOCUMENTS

A. Drawings and general provisions of the Contract, including General and Supplementary Conditions and Division 01 Specification Sections, apply to this Section.

1.2 SUMMARY

A. Section Includes:

1. Engine.
2. Gas fuel system.
3. Control and monitoring.
4. Generator overcurrent and fault protection.
5. Generator, exciter, and voltage regulator.
6. Load bank.
7. Outdoor generator-set enclosure.
8. Remote radiator motors.
9. Vibration isolation devices.

1.3 DEFINITIONS

A. EPS: Emergency power supply.

B. EPSS: Emergency power supply system.

C. LP: Liquefied petroleum.

D. Operational Bandwidth: The total variation from the lowest to highest value of a parameter over the range of conditions indicated, expressed as a percentage of the nominal value of the parameter.

1.4 SUBMITTALS

A. Submittals for this section are subject to the re-evaluation fee identified in Article 4 of the General Conditions.

B. Manufacturer’s installation instructions shall be provided along with product data.

C. Submittals shall be provided in the order in which they are specified and tabbed (for combined submittals).

D. Product Data: For each type of product.

1. Include rated capacities, operating characteristics, electrical characteristics, and furnished specialties and accessories.
2. Include thermal damage curve for generator.
3. Include time-current characteristic curves for generator protective device.

4. Include fuel consumption in cubic feet per hour (cubic meters per hour) at 0.8 power factor at 0.5, 0.75 and 1.0 times generator capacity.
5. Include generator efficiency at 0.8 power factor at 0.5, 0.75, and 1.0 times generator capacity.
6. Include air flow requirements for cooling and combustion air in cfm at 0.8 power factor, with air supply temperature of 95 deg F, 80 deg F, 70 deg F, and 50 deg F. Provide drawings showing requirements and limitations for location of air intake and exhausts.
7. Include generator characteristics, including, but not limited to, kilowatt rating, efficiency, reactances, and short-circuit current capability.

E. Shop Drawings:

1. Include plans and elevations for engine generator and other components specified.
2. Include details of equipment assemblies. Indicate dimensions, weights, loads, required clearances, method of field assembly, components, and location and size of each field connection.
3. Identify fluid drain ports and clearance requirements for proper fluid drain.
4. Design calculations for selecting vibration isolators and seismic restraints and for designing vibration isolation bases.
5. Vibration Isolation Base Details: Detail fabrication including anchorages and attachments to structure and to supported equipment. Include base weights.
6. Include diagrams for power, signal, and control wiring. Complete schematic, wiring, and interconnection diagrams showing terminal markings for EPS equipment and functional relationship between all electrical components.

F. Submittals for this section are subject to the re-evaluation fee identified in Article 4 of the General Conditions.

G. Qualification Data: For [**Installer**] [**manufacturer**] [**and**] [**testing agency**].

H. Seismic Qualification Data: Certificates, for engine generator, accessories, and components, from manufacturer.

1. Basis for Certification: Indicate whether withstand certification is based on actual test of assembled components or on calculation.
2. Dimensioned Outline Drawings of Equipment Unit: With engine and generator mounted on rails, identify center of gravity and total weight, [**supplied enclosure,**] [**external silencer,**] [**subbase-mounted fuel tank,**] [**skid-mounted load bank,**] and each piece of equipment not integral to the engine generator, and locate and describe mounting and anchorage provisions.
3. Detailed description of equipment anchorage devices on which the certification is based and their installation requirements.

I. Source Quality-Control Reports: Including, but not limited to, the following:

1. Certified summary of prototype-unit test report.
2. Certified Test Reports: For components and accessories that are equivalent, but not identical, to those tested on prototype unit.
3. Certified Summary of Performance Tests: Certify compliance with specified requirement to meet performance criteria for sensitive loads.
4. Report of factory test on units to be shipped for this Project, showing evidence of compliance with specified requirements.
5. Report of sound generation.
6. Report of exhaust emissions showing compliance with applicable regulations.
7. Certified Torsional Vibration Compatibility: Comply with NFPA 110.

J. Field quality-control reports.

K. Warranty: For special warranty.

1.5 CLOSEOUT SUBMITTALS

A. Operation and Maintenance Data: For engine generators to include in emergency, operation, and maintenance manuals.

1. Include the following:

a. List of tools and replacement items recommended to be stored at Project for ready access. Include part and drawing numbers, current unit prices, and source of supply.
b. Operating instructions laminated and mounted adjacent to generator location.
c. Training plan.

1.6 MAINTENANCE MATERIAL SUBMITTALS

A. Furnish extra materials that match products installed and that are packaged with protective covering for storage and identified with labels describing contents.

1. Fuses: One for every 10 of each type and rating, but no fewer than one of each.
2. Indicator Lamps: Two for every six of each type used, but no fewer than two of each.
3. Filters: One set each of lubricating oil, fuel, and combustion-air filters.
4. Tools: Each tool listed by part number in operations and maintenance manual.

1.7 QUALITY ASSURANCE

A. Installer Qualifications: An authorized representative who is trained and approved by manufacturer.

B. Testing Agency Qualifications: Accredited by NETA.

1. Testing Agency's Field Supervisor: Certified by NETA to supervise on-site testing.

1.8 WARRANTY

A. Manufacturer's Warranty: Manufacturer agrees to repair or replace components of packaged engine generators and associated auxiliary components that fail in materials or workmanship within specified warranty period.

1. Warranty Period: 10 years from date of Substantial Completion.

PART 2 - PRODUCTS

2.1 MANUFACTURERS

A. Manufacturers: Subject to compliance with requirements, available manufacturers offering products that may be incorporated into the Work include, but are not limited to the following:

1. Cummins Power Generation.
2. Or approved equal.

B. Source Limitations: Obtain packaged engine generators and auxiliary components through one source from a single manufacturer.

2.2 PERFORMANCE REQUIREMENTS

A. Seismic Performance: Engine generator housing, engine generator, batteries, battery racks, silencers, [**load banks,**]and sound attenuating equipment, accessories, and components shall withstand the effects of earthquake motions determined according to [**ASCE/SEI 7**].

1. The term "withstand" means "the unit will remain in place without separation of any parts when subjected to the seismic forces specified[**and the unit will be fully operational after the seismic event**]."
2. Shake-table testing shall comply with UNIFORM CODE-ES AC156. Testing shall be performed with all fluids at worst-case normal levels.
3. Component Importance Factor: [**1.5**]

B. B11 Compliance: Comply with B11.19.

C. NFPA Compliance:

1. Comply with NFPA 37.
2. Comply with NFPA 70.
3. Comply with NFPA 110 requirements for Level [**2**] EPSS.

D. UL Compliance: Comply with UL 2200.

E. Engine Exhaust Emissions: Comply with EPA Tier [**2**] [**3**] [**4**] requirements and applicable state and local government requirements.

F. Noise Emission: Comply with [**applicable state and local government requirements**] <**Insert Project criteria**> for maximum noise level at [**adjacent property boundaries**] <**Insert critical locations**> due to sound emitted by engine generator including engine, engine exhaust, engine cooling-air intake and discharge, and other components of installation.

G. Environmental Conditions: Engine generator system shall withstand the following environmental conditions without mechanical or electrical damage or degradation of performance capability:

1. Ambient Temperature: [**41 to 104 deg F**] [**5 to 104 deg F**].
2. Relative Humidity: Zero to 95 percent.
3. Altitude: Sea level to [**1000 feet**] <**Insert altitude**>.

H. Unusual Service Conditions: Engine generator equipment and installation are required to operate under the following conditions:

1. [**High salt-dust content in the air due to sea-spray evaporation**].

2.3 ENGINE GENERATOR ASSEMBLY DESCRIPTION

A. Factory-assembled and -tested, water-cooled engine, with brushless generator and accessories.

B. Electrical Components, Devices, and Accessories: Listed and labeled as defined in NFPA 70, by a testing agency acceptable to authorities having jurisdiction, and marked for intended location and use.

C. Power Rating: [**Standby**].

D. Overload Capacity: 110 percent of service load for 1 hour in 12 consecutive hours.

E. EPSS Class: Engine generator shall be classified as [**Class 2**] [**Class 6**] [**Class 48**] [**Class 96**] according to NFPA 110.

F. Service Load: 150 kVA.

G. Power Factor: [**0.8**] , lagging.

H. Frequency: 60 Hz.

I. Voltage: [**208**] V ac.

J. Phase: Three-phase, [**four**] wire, [**wye**].

K. Induction Method: [**Naturally aspirated**] [**Turbocharged**].

L. Governor: Adjustable isochronous, with speed sensing.

M. Mounting Frame: Structural steel framework to maintain alignment of mounted components without depending on concrete foundation. Provide lifting attachments sized and spaced to prevent deflection of base during lifting and moving.

1. Rigging Diagram: Inscribed on metal plate permanently attached to mounting frame to indicate location and lifting capacity of each lifting attachment and generator-set center of gravity.

N. Capacities and Characteristics:

1. Power Output Ratings: Nominal ratings as indicated at 0.8 power factor excluding power required for the continued and repeated operation of the unit and auxiliaries[**, with capacity as required to operate as a unit as evidenced by records of prototype testing**].
2. Nameplates: For each major system component to identify manufacturer's name and address, and model and serial number of component.

O. Engine Generator Performance:

1. Steady-State Voltage Operational Bandwidth: 3 percent of rated output voltage from no load to full load.
2. Transient Voltage Performance: Not more than 20 percent variation for 50 percent step-load increase or decrease. Voltage shall recover and remain within the steady-state operating band within three seconds.
3. Steady-State Frequency Operational Bandwidth: 0.5 percent of rated frequency from no load to full load.
4. Steady-State Frequency Stability: When system is operating at any constant load within the rated load, there shall be no random speed variations outside the steady-state operational band and no hunting or surging of speed.
5. Transient Frequency Performance: Less than 5 percent variation for 50 percent step-load increase or decrease. Frequency shall recover and remain within the steady-state operating band within five seconds.
6. Output Waveform: At no load, harmonic content measured line to line or line to neutral shall not exceed 5 percent total and 3 percent for single harmonics. Telephone influence factor, determined according to NEMA MG 1, shall not exceed 50 percent.
7. Sustained Short-Circuit Current: For a three-phase, bolted short circuit at system output terminals, system shall supply a minimum of 250 percent of rated full-load current for not less than 10 seconds and then clear the fault automatically, without damage to generator system components.
8. Start Time:

a. Comply with NFPA 110, [**Type U**] [**Type 10**] system requirements.
b. [**10**] seconds.

P. Engine Generator Performance for Sensitive Loads:

1. Oversizing generator compared with the rated power output of the engine is permissible to meet specified performance.

a. Nameplate Data for Oversized Generator: Show ratings required by the Contract Documents rather than ratings that would normally be applied to generator size installed.

2. Steady-State Voltage Operational Bandwidth: 1 percent of rated output voltage from no load to full load.

3. Transient Voltage Performance: Not more than 10 percent variation for 50 percent step-load increase or decrease. Voltage shall recover and remain within the steady-state operating band within 0.5 second.
4. Steady-State Frequency Operational Bandwidth: Plus or minus 0.25 percent of rated frequency from no load to full load.
5. Steady-State Frequency Stability: When system is operating at any constant load within the rated load, there shall be no random speed variations outside the steady-state operational band and no hunting or surging of speed.
6. Transient Frequency Performance: Less than 2-Hz variation for 50 percent step-load increase or decrease. Frequency shall recover and remain within the steady-state operating band within three seconds.
7. Output Waveform: At no load, harmonic content measured line to neutral shall not exceed 2 percent total with no slot ripple. Telephone influence factor, determined according to NEMA MG 1, shall not exceed 50 percent.
8. Sustained Short-Circuit Current: For a three-phase, bolted short circuit at system output terminals, system shall supply a minimum of 300 percent of rated full-load current for not less than 10 seconds and then clear the fault automatically, without damage to winding insulation or other generator system components.
9. Excitation System: Performance shall be unaffected by voltage distortion caused by nonlinear load.

    a. Provide permanent magnet excitation for power source to voltage regulator.

10. Start Time:

    a. Comply with NFPA 110, [**Type U**] [**Type 10**] system requirements.
    b. [**10**] seconds.

Q. Parallel Engine Generators:

1. Automatic reactive output power control and load sharing between engine generators operated in parallel.
2. Automatic regulation, automatic connection to a common bus, and automatic synchronization, with manual controls and instruments to monitor and control paralleling functions.
3. Protective relays required for equipment and personnel safety.
4. Paralleling suppressors to protect excitation systems.
5. Reverse power protection.
6. Loss of field protection.

2.4 GAS ENGINE

A. Fuel: [**Natural gas**] .

B. Rated Engine Speed: 1800 rpm.

C. Lubrication System: Engine or skid-mounted.

1. Filter and Strainer: Rated to remove 90 percent of particles 5 micrometers and smaller while passing full flow.
2. Thermostatic Control Valve: Control flow in system to maintain optimum oil temperature. Unit shall be capable of full flow and is designed to be fail-safe.
3. Crankcase Drain: Arranged for complete gravity drainage to an easily removable container with no disassembly and without use of pumps, siphons, special tools, or appliances.

D. Jacket Coolant Heater: Electric-immersion type, factory installed in coolant jacket system. Comply with UL 499[**and with NFPA 110 requirements for Level 1 equipment for heater capacity**].

E. Integral Cooling System: Closed loop, liquid cooled, with radiator factory mounted on engine generator mounting frame and integral engine-driven coolant pump.

1. Coolant: Solution of 50 percent ethylene-glycol-based antifreeze and 50 percent water, with anticorrosion additives as recommended by engine manufacturer.
2. Size of Radiator: Adequate to contain expansion of total system coolant from cold start to 110 percent load condition.

3. Expansion Tank: Constructed of welded steel plate and rated to withstand maximum closed-loop coolant system pressure for engine used. Equip with gage glass and petcock.
4. Temperature Control: Self-contained, thermostatic-control valve modulates coolant flow automatically to maintain optimum constant coolant temperature as recommended by engine manufacturer.
5. Coolant Hose: Flexible assembly with inside surface of nonporous rubber and outer covering of aging-, ultraviolet-, and abrasion-resistant fabric.

    a. Rating: 50-psig maximum working pressure with coolant at 180 deg F, and noncollapsible under vacuum.
    b. End Fittings: Flanges or steel pipe nipples with clamps to suit piping and equipment connections.

F. Remote Cooling System: Closed loop, liquid cooled, with remote radiator and [**integral engine-driven**] [**auxiliary**] coolant pump.

1. Configuration: [**Vertical**] air discharge.
2. Radiator Core Tubes: [**Aluminum**] [**Nonferrous-metal construction other than aluminum**].
3. Size of Radiator: Adequate to contain expansion of total system coolant from cold start to 110 percent load condition.
4. Expansion Tank: Constructed of welded steel plate and rated to withstand maximum closed-loop coolant system pressure for engine used. Equip with gage glass and petcock.
5. Fan: Driven by [**multiple belts from engine shaft**] [**totally enclosed electric motor with sealed bearings**].
6. Coolant: Solution of 50 percent ethylene-glycol-based antifreeze and 50 percent water, with anticorrosion additives as recommended by engine manufacturer.
7. Temperature Control: Self-contained, thermostatic-control valve modulates coolant flow automatically to maintain optimum constant coolant temperature as recommended by engine manufacturer.

G. Muffler/Silencer:

1. Critical type sized as recommended by engine manufacturer and selected with exhaust piping system to not exceed engine manufacturer's engine backpressure requirements.

    a. Minimum sound attenuation of 25 dB at 500 Hz.
    b. Sound level measured at a distance of 25 feet from exhaust discharge after installation is complete shall be [**78**] dBA or less.

2. Semicritical type, sized as recommended by engine manufacturer and selected with exhaust piping system to not exceed engine manufacturer's engine backpressure requirements.

    a. Minimum sound attenuation of 18 dB at 500 Hz.
    b. Sound level measured at a distance of 25 feet from exhaust discharge after installation is complete shall be [**85**] dBA or less.

3. Commercial type sized as recommended by engine manufacturer and selected with exhaust piping system to not exceed engine manufacturer's engine backpressure requirements.

    a. Minimum sound attenuation of 12 dB at 500 Hz.
    b. Sound level measured at a distance of 25 feet from exhaust discharge after installation is complete shall be [**90**] dBA or less.

H. Air-Intake Filter: [**Standard**] [**Heavy**]-duty, engine-mounted air cleaner with replaceable dry-filter element and "blocked filter" indicator.

I. Starting System: [**12**] [**24**]-V electric, with negative ground.

1. Components: Sized so they are not damaged during a full engine-cranking cycle with ambient temperature at maximum specified in "Performance Requirements" Article.
2. Cranking Motor: Heavy-duty unit that automatically engages and releases from engine flywheel without binding.

3. Cranking Cycle: [**As required by NFPA 110 for system level specified**] [**60 seconds**].
4. Battery: [**Nickel cadmium**], with capacity within ambient temperature range specified in "Performance Requirements" Article to provide specified cranking cycle at least [**twice**] [**three times**] without recharging.
5. Battery Cable: Size as recommended by engine manufacturer for cable length indicated. Include required interconnecting conductors and connection accessories.
6. Battery Compartment: Factory fabricated of metal with acid-resistant finish and thermal insulation. Thermostatically controlled heater shall be arranged to maintain battery above 50 deg F regardless of external ambient temperature within range specified in "Performance Requirements" Article. Include accessories required to support and fasten batteries in place. Provide ventilation to exhaust battery gases.
7. Battery Stand: Factory-fabricated, two-tier metal with acid-resistant finish designed to hold the quantity of battery cells required and to maintain the arrangement to minimize lengths of battery interconnections.
8. Battery-Charging Alternator: Factory mounted on engine with solid-state voltage regulation and 35 A minimum continuous rating.
9. Battery Charger: Current-limiting, automatic-equalizing and float-charging type designed for [**nickel cadmium**] batteries. Unit shall comply with UL 1236 and include the following features:

    a. Operation: Equalizing-charging rate of 10 A shall be initiated automatically after battery has lost charge until an adjustable equalizing voltage is achieved at battery terminals. Unit shall then be automatically switched to a lower float-charging mode and shall continue to operate in that mode until battery is discharged again.
    b. Automatic Temperature Compensation: Adjust float and equalize voltages for variations in ambient temperature from minus 40 deg F to 140 deg F to prevent overcharging at high temperatures and undercharging at low temperatures.
    c. Automatic Voltage Regulation: Maintain constant output voltage regardless of input voltage variations up to plus or minus 10 percent.
    d. Ammeter and Voltmeter: Flush mounted in door. Meters shall indicate charging rates.
    e. Safety Functions: Sense abnormally low battery voltage and close contacts providing low battery voltage indication on control and monitoring panel. Sense high battery voltage and loss of ac input or dc output of battery charger. Either condition shall close contacts that provide a battery-charger malfunction indication at system control and monitoring panel.
    f. Enclosure and Mounting: NEMA 250, Type 1, wall-mounted cabinet.

2.5 GAS FUEL SYSTEM

A. Gas Train: Comply with NFPA 37.

B. Engine Fuel System:

C. **Natural Gas** , Vapor-Withdrawal System:

1. Carburetor.
2. Secondary Gas Regulators: One for each fuel type, with atmospheric vents piped to building exterior.
3. Fuel-Shutoff Solenoid Valves: NRTL-listed, normally closed, safety shutoff valves; one for each fuel source.
4. Fuel Filters: One for each fuel type.
5. Manual Fuel Shutoff Valves: One for each fuel type.
6. Flexible Fuel Connectors: Minimum one for each fuel connection.
7. LP gas flow adjusting valve.
8. Fuel change gas pressure switch.

2.6 CONTROL AND MONITORING

A. Automatic Starting System Sequence of Operation: When mode-selector switch on the control and monitoring panel is in the automatic position, remote-control contacts in one or more separate automatic transfer switches initiate starting and stopping of engine generator. When mode-selector switch is switched to the on position, engine generator starts. The off position of same switch initiates generator-set shutdown. When engine generator is running, specified system or equipment failures or derangements automatically shut down engine generator and initiate alarms.

B. Manual Starting System Sequence of Operation: Switching on-off switch on the generator control panel to the on position starts engine generator. The off position of same switch initiates generator-set shutdown. When engine generator is running, specified system or equipment failures or derangements automatically shut down engine generator and initiate alarms.

C. Provide minimum run time control set for [**15**] [**30**] minutes with override only by operation of a remote emergency-stop switch.

D. Comply with UL 508A.

E. Configuration:

1. Operating and safety indications, protective devices, basic system controls, and engine gages shall be grouped in a common control and monitoring panel mounted on the engine generator. Mounting method shall isolate the control panel from generator-set vibration. Panel shall be powered from the engine generator battery.
2. Operating and safety indications, protective devices, basic system controls, and engine gages shall be grouped in a common wall-mounted control and monitoring panel. Panel shall be powered from the engine generator battery.
3. Operating and safety indications, protective devices, basic system controls, engine gages, instrument transformers, generator disconnect switch or circuit breaker, and other indicated components shall be grouped in a combination control and power panel. Control and monitoring section of panel shall be isolated from power sections by steel barriers. Panel shall be powered from the engine generator battery. Panel features shall include the following:

    a. Wall-Mounting Cabinet Construction: Rigid, self-supporting steel unit complying with NEMA ICS 6.
    b. Switchboard Construction: Power bus shall be copper. Bus, bus supports, control wiring, and temperature rise shall comply with UL 891.

4. Digital controller with integrated LCD, controls, and microprocessor, capable of local and remote control, monitoring, and programming, with battery backup.
5. Analog control panel with dedicated gages and indicator lights for the instruments and alarms indicated below.
6. Instruments: Located on the control and monitoring panel and viewable during operation.

    a. Engine lubricating-oil pressure gage.
    b. Engine-coolant temperature gage.
    c. DC voltmeter (alternator battery charging).
    d. Running-time meter.
    e. AC voltmeter, [**for each phase**] [**connected to a phase selector switch**].
    f. AC ammeter, [**for each phase**] [**connected to a phase selector switch**].
    g. AC frequency meter.
    h. Generator-voltage adjusting rheostat.

7. Controls and Protective Devices: Controls, shutdown devices, and common visual alarm indication, including the following:

    a. Cranking control equipment.
    b. Run-Off-Auto switch.
    c. Control switch not in automatic position alarm.
    d. Overcrank alarm.
    e. Overcrank shutdown device.
    f. Low water temperature alarm.
    g. High engine temperature prealarm.
    h. High engine temperature.
    i. High engine temperature shutdown device.
    j. Overspeed alarm.
    k. Overspeed shutdown device.
    l. Low fuel main tank.

1) Low-fuel-level alarm shall be initiated when the level falls below that required for operation for the duration required for the indicated EPSS class.

m. Coolant low-level alarm.
n. Coolant low-level shutdown device.
o. Coolant high-temperature prealarm.
p. Coolant high-temperature alarm.
q. Coolant low-temperature alarm.
r. Coolant high-temperature shutdown device.
s. EPS supplying load indicator.
t. Battery high-voltage alarm.
u. Low cranking voltage alarm.
v. Battery-charger malfunction alarm.
w. Battery low-voltage alarm.
x. Lamp test.
y. Contacts for local and remote common alarm.
z. Low-starting air pressure alarm.
aa. Low-starting hydraulic pressure alarm.
bb. Remote manual stop shutdown device.
cc. Air shutdown damper alarm when used.
dd. Air shutdown damper shutdown device when used.
ee. Hours of operation.
ff. Engine generator metering, including voltage, current, Hz, kW, kVA, and power factor.
gg. Generator overcurrent protective device not closed alarm.

F. Connection to Datalink:

1. A separate terminal block, factory wired to Form C dry contacts, for each alarm and status indication.
2. Provide connections for datalink transmission of indications to remote data terminals via [**ModBus**] [**LonWorks**] [**Ethernet**] "

G. Common Remote Panel with Common Audible Alarm: Include necessary contacts and terminals in control and monitoring panel. Remote panel shall be powered from the engine generator battery.

H. Remote Alarm Annunciator: An LED indicator light labeled with proper alarm conditions shall identify each alarm event, and a common audible signal shall sound for each alarm condition. Silencing switch in face of panel shall silence signal without altering visual indication. Connect so that after an alarm is silenced, clearing of initiating condition will reactivate alarm until silencing switch is reset. Cabinet and faceplate are surface- or flush-mounting type to suit mounting conditions indicated.

1. Overcrank alarm.
2. Coolant low-temperature alarm.
3. High engine temperature prealarm.
4. High engine temperature alarm.
5. Low lube oil pressure alarm.
6. Overspeed alarm.
7. Low fuel main tank alarm.
8. Low coolant level alarm.
9. Low cranking voltage alarm.
10. Contacts for local and remote common alarm.
11. Audible-alarm silencing switch.
12. Air shutdown damper when used.
13. Run-Off-Auto switch.
14. Control switch not in automatic position alarm.
15. Fuel tank derangement alarm.
16. Fuel tank high-level shutdown of fuel supply alarm.
17. Lamp test.
18. Low cranking voltage alarm.
19. Generator overcurrent protective device not closed.

I. Remote Emergency-Stop Switch: Flush; wall mounted, unless otherwise indicated; and labeled. Push button shall be protected from accidental operation.

J. Supporting Items: Include sensors, transducers, terminals, relays, and other devices and include wiring required to support specified items. Locate sensors and other supporting items on engine or generator, unless otherwise indicated.

2.7 GENERATOR OVERCURRENT AND FAULT PROTECTION

A. Overcurrent protective devices shall be coordinated to optimize selective tripping when a short circuit occurs.

B. Overcurrent protective devices for the entire EPSS shall be coordinated to optimize selective tripping when a short circuit occurs. Coordination of protective devices shall consider both utility and EPSS as the voltage source.

C. Overcurrent protective devices for the EPSS shall be accessible only to authorized personnel.

D. Generator Overcurrent Protective Device:

1. Molded-case circuit breaker, thermal-magnetic type; 100 percent rated; complying with UL 489:

   a. Tripping Characteristic: Designed specifically for generator protection.
   b. Trip Rating: Matched to generator output rating.
   c. Shunt Trip: Connected to trip breaker when engine generator is shut down by other protective devices.
   d. Mounting: Adjacent to or integrated with control and monitoring panel.

2. Molded-case circuit breaker, electronic-trip type; 100 percent rated; complying with UL 489:

   a. Tripping Characteristics: Adjustable long-time and short-time delay and instantaneous.
   b. Trip Settings: Selected to coordinate with generator thermal damage curve.
   c. Shunt Trip: Connected to trip breaker when engine generator is shut down by other protective devices.
   d. Mounting: Adjacent to or integrated with control and monitoring panel.

3. Insulated-case circuit breaker, electronic-trip type; 100 percent rated; complying with UL 489:

   a. Tripping Characteristics: Adjustable long-time and short-time delay and instantaneous.
   b. Trip Settings: Selected to coordinate with generator thermal damage curve.
   c. Shunt Trip: Connected to trip breaker when engine generator is shut down by other protective devices.
   d. Mounting: Adjacent to, or integrated with control and monitoring panel.

4. Molded-case type disconnect switch, 100 percent rated:

   a. Trip Rating: Matched to generator output rating.
   b. Shunt Trip: Connected to trip switch when signaled by generator protector or by other protective devices.

E. Generator Protector: Microprocessor-based unit shall continuously monitor current level in each phase of generator output, integrate generator heating effect over time, and predict when thermal damage of alternator will occur. When signaled by generator protector or other generator-set protective devices, a shunt-trip device in the generator disconnect switch shall open the switch to disconnect the generator from load circuits. Protector performs the following functions:

1. Initiates a generator overload alarm when generator has operated at an overload equivalent to 110 percent of full-rated load for 60 seconds. Indication for this alarm is integrated with other generator-set malfunction alarms. Contacts shall be available for load shed functions.
2. Under single or three-phase fault conditions, regulates generator to 300 percent of rated full-load current for up to 10 seconds.
3. As overcurrent heating effect on the generator approaches the thermal damage point of the unit, protector switches the excitation system off, opens the generator disconnect device, and shuts down the engine generator.

4. Senses clearing of a fault by other overcurrent devices and controls recovery of rated voltage to avoid overshoot.

F. Ground-Fault Indication: Comply with NFPA 70, "Emergency System" signals for ground fault.

1. Indicate ground fault with other engine generator alarm indications.
2. Trip generator protective device on ground fault.

2.8 GENERATOR, EXCITER, AND VOLTAGE REGULATOR

A. Comply with NEMA MG 1.

B. Drive: Generator shaft shall be directly connected to engine shaft. Exciter shall be rotated integrally with generator rotor.

C. Electrical Insulation: [**Class H**] [**or**] [**Class F**].

D. Stator-Winding Leads: Brought out to terminal box to permit future reconnection for other voltages if required. Provide [**six**] [**12**] lead alternator.

E. Range: Provide [**limited**] [**broad**] [**extended**] range of output voltage by adjusting the excitation level.

F. Construction shall prevent mechanical, electrical, and thermal damage due to vibration, overspeed up to 125 percent of rating, and heat during operation at 110 percent of rated capacity.

G. Enclosure: Dripproof.

H. Instrument Transformers: Mounted within generator enclosure.

I. Voltage Regulator: Solid-state type, separate from exciter, providing performance as specified[**and as required by NFPA 110**].

1. Adjusting Rheostat on Control and Monitoring Panel: Provide plus or minus 5 percent adjustment of output-voltage operating band.
2. Maintain voltage within [**15**] [**20**] [**30**] percent on one step, full load.
3. Provide anti-hunt provision to stabilize voltage.
4. Maintain frequency within [**5**] [**10**] [**15**] percent and stabilize at rated frequency within [**2**] [**5**] seconds.

J. Strip Heater: Thermostatically controlled unit arranged to maintain stator windings above dew point.

K. Windings: Two-thirds pitch stator winding and fully linked amortisseur winding.

L. Subtransient Reactance: [**12**] percent, maximum.

2.9 LOAD BANK

A. Description:

1. Permanent, outdoor, weatherproof, remote-controlled, forced-air-cooled, [**resistive**] [**resistive and reactive**] unit capable of providing a balanced three-phase, delta-connected load to engine generator at [**100**] percent rated-system capacity, at [**80**] percent power factor, lagging.[**Unit may contain separate resistive and reactive load banks controlled by a common control panel.**] Unit shall be capable of selective control of load in 25 percent steps and with minimum step changes of approximately 5 and 10 percent available.
2. Permanent, radiator-mounted[**, resistive**] unit capable of providing a balanced three-phase, delta-connected load to engine generator at [**50**] [**70**] percent rated-system capacity. Unit shall be capable of selective control

of load in 25 percent steps of load bank rating and with minimum step changes of approximately 5 and 10 percent available.

B. Resistive Load Elements: Corrosion-resistant chromium alloy with ceramic and stainless-steel supports. Elements shall be double insulated and designed for repetitive on-off cycling. Elements shall be mounted in removable aluminized-steel heater cases. Galvanized steel is prohibited. Element's maximum resistance shall be between 100 and 105 percent of rated resistance.

C. Reactive Load Elements: Epoxy-encapsulated reactor coils.

D. Load-Bank Heat Dissipation: Integral fan with totally enclosed motor shall provide uniform cooling airflow through load elements. Airflow and coil operating current shall be such that, at maximum load, with ambient temperature at the upper end of specified range, load-bank elements operate at not more than 50 percent of maximum continuous temperature rating of resistance elements.

E. Load-Element Switching: Remote-controlled contactors switch groups of load elements. Contactor coils are rated 120 V. Contactors shall be located in a separate NEMA 250, Type 3R enclosure within load-bank enclosure, accessible from exterior through hinged doors with tumbler locks.

F. Contactor Enclosures: Heated by thermostatically controlled strip heaters to prevent condensation.

G. Load-Bank Enclosures: NEMA 250, Type 3R, aluminized steel complying with NEMA ICS 6. Louvers at cooling-air intake and discharge openings shall prevent entry of rain and snow. Openings for airflow shall be screened with 1/2-inch- square, galvanized-steel mesh. Reactive load bank shall include automatic shutters at air intake and discharge. Components other than resistive elements shall receive exterior epoxy coating with compatible primer.

H. Protective Devices: Power input circuits to load banks shall be fused, and fuses shall be selected to coordinate with generator circuit breaker. Fuse blocks shall be located in contactor enclosure. Cooling airflow and overtemperature sensors shall automatically shut down and lock out load bank until manually reset. Safety interlocks on access panels and doors shall disconnect load power, control, and heater circuits. Fan motor shall be separately protected by overload and short-circuit devices. Short-circuit devices shall be noninterchangeable fuses with 200,000 A interrupting capacity.

I. Load Bank Remote-Control Panel: Separate from load bank in NEMA 250, Type 1 enclosure with a control power switch and pilot light, and switches controlling groups of load elements.

J. Control Sequence: Control panel may be preset for adjustable single-step loading of generator during automatic exercising.

2.10 OUTDOOR GENERATOR-SET ENCLOSURE

A. Description:

1. Vandal-resistant, sound-attenuating, weatherproof steel housing, wind resistant up to 100 mph. Multiple panels shall be lockable and provide adequate access to components requiring maintenance. Panels shall be removable by one person without tools. Instruments and control shall be mounted within enclosure.

   a. Sound Attenuation Level: 2

2. Prefabricated or pre-engineered galvanized-steel-clad, integral structural-steel-framed, walk-in enclosure, erected on concrete foundation.

B. Structural Design and Anchorage: Comply with ASCE/SEI 7 for wind loads up to 100 mph.

C. Fire Protection: Provide smoke detector in enclosure; mounted according to NFPA 72.

D. Hinged Doors: With padlocking provisions.

E. Space Heater: Thermostatically controlled and sized to prevent condensation.

F. Lighting: Provide weather-resistant [**LED**] lighting with [**50 fc**] average maintained.

G. Thermal Insulation: Manufacturer's standard materials and thickness selected in coordination with space heater to maintain winter interior temperature within operating limits required by engine generator components.

H. Muffler Location: [**Within**] enclosure.

I. Engine Cooling Airflow through Enclosure: Maintain temperature rise of system components within required limits when unit operates at 110 percent of rated load for 2 hours with ambient temperature at top of range specified in system service conditions.

1. Louvers: Fixed-engine, cooling-air inlet and discharge. Storm-proof and drainable louvers prevent entry of rain and snow.
2. Automatic Dampers: At engine cooling-air inlet and discharge. Dampers shall be closed to reduce enclosure heat loss in cold weather when unit is not operating.
3. Ventilation: Provide temperature-controlled exhaust fan interlocked to prevent operation when engine is running.

J. Interior Lights with Switch: Factory-wired, vapor-proof fixtures within housing; arranged to illuminate controls and accessible interior. Arrange for external electrical connection.

1. AC lighting system and connection point for operation when remote source is available.
2. DC lighting system for operation when remote source and generator are both unavailable.

K. Convenience Outlets: Factory wired, GFCI. Arrange for external electrical connection.

2.11 REMOTE RADIATOR MOTORS

A. Description: NEMA MG 1, Design B, medium induction random-wound, squirrel-cage motor.

B. Efficiency: Energy efficient, as defined in NEMA MG 1.

C. Service Factor: 1.15.

D. Bearings: Regreasable, shielded, antifriction ball bearings suitable for radial and thrust loading.

E. Motor Sizes: Minimum size as indicated. If not indicated, large enough so driven load will not require motor to operate in service factor range above 1.0.

F. Temperature Rise: Match insulation rating.

G. Code Letter Designation:

1. Motors [**15**] HP and Larger: NEMA starting Code F or Code G.
2. Motors Smaller Than [**15**] HP: Manufacturer's standard starting characteristic.

H. Enclosure Material: Cast iron for motor frame sizes 324T and larger; rolled steel for motor frame sizes smaller than 324T.

I. Controllers, Electrical Devices, and Wiring: Electrical devices and connections are specified in electrical Sections.

2.12 VIBRATION ISOLATION DEVICES

A. Elastomeric Isolator Pads: Oil- and water-resistant elastomer or natural rubber, arranged in single or multiple layers, molded with a nonslip pattern and galvanized-steel baseplates of sufficient stiffness for uniform loading over pad area, and factory cut to sizes that match requirements of supported equipment.

1. Material: [**Standard neoprene**] [**Bridge-bearing neoprene, complying with AASHTO M 251**] separated by steel shims. Similar to Mason Industies, Type W
2. Shore "A" Scale Durometer Rating: [**30**] [**40**] [**45**] [**50**] [**60**] [**65**] [**70**] .
3. Number of Layers: [**Three**] .
4. Minimum Deflection: [**2 inch**], final inches shall be determined to allow for uniform mounting deflection.

B. Restrained Spring Isolators: Freestanding, steel, open-spring isolators with seismic restraint.

1. Housing: Steel with resilient vertical-limit stops to prevent spring extension due to wind loads or if weight is removed; factory-drilled baseplate bonded to 1/4-inch- thick, elastomeric isolator pad attached to baseplate underside; and adjustable equipment mounting and leveling bolt that acts as blocking during installation.
2. Outside Spring Diameter: Not less than 80 percent of compressed height of the spring at rated load.
3. Minimum Additional Travel: 50 percent of required deflection at rated load.
4. Lateral Stiffness: More than 80 percent of rated vertical stiffness.
5. Overload Capacity: Support 200 percent of rated load, fully compressed, without deformation or failure.
6. Minimum Deflection: [2 **inch**]

C. Vibration isolation devices shall not be used to accommodate misalignments or to make bends.

2.13 FINISHES

A. Indoor and Outdoor Enclosures and Components: Manufacturer's standard finish over corrosion-resistant pretreatment and compatible primer.

2.14 SOURCE QUALITY CONTROL

A. Prototype Testing: Factory test engine generator using same engine model, constructed of identical or equivalent components and equipped with identical or equivalent accessories.

1. Tests: Comply with IEEE 115[**and with NFPA 110, Level 1 Energy Converters**].

B. Project-Specific Equipment Tests: Before shipment, factory test engine generator and other system components and accessories manufactured specifically for this Project. Perform tests at rated load and power factor. Include the following tests:

1. Test components and accessories furnished with installed unit that are not identical to those on tested prototype to demonstrate compatibility and reliability.
2. Test generator, exciter, and voltage regulator as a unit.
3. Full load run.
4. Maximum power.
5. Voltage regulation.
6. Transient and steady-state governing.
7. Single-step load pickup.
8. Safety shutdown.
9. Provide 14 days' advance notice of tests and opportunity for observation of tests by Director’s Representative.
10. Report factory test results within 10 days of completion of test.

PART 3 - EXECUTION

3.1 EXAMINATION

A. Examine areas, equipment bases, and conditions, with Installer present, for compliance with requirements for installation and other conditions affecting packaged engine generator performance.

B. Examine roughing-in for piping systems and electrical connections. Verify actual locations of connections before packaged engine generator installation.

C. Proceed with installation only after unsatisfactory conditions have been corrected.

3.2 PREPARATION

A. Interruption of Existing Electrical Service: Do not interrupt electrical service to facilities occupied by Director's Representative or others unless permitted under the following conditions and then only after arranging to provide temporary electrical service according to requirements indicated:

1. Notify [**Architect**] [**Construction Manager**] [Owner**'s Representative**] no fewer than [**two**] working days in advance of proposed interruption of electrical service.
2. Do not proceed with interruption of electrical service without [**Architect's**] [**Construction Manager's**] [Owner**'s Representative's**] written permission.

3.3 INSTALLATION

A. Comply with NECA 1 and NECA 404.

B. Comply with packaged engine generator manufacturers' written installation and alignment instructions[**and with NFPA 110**].

C. Equipment Mounting:

1. Install packaged engine generators on cast-in-place concrete equipment bases.
2. Coordinate size and location of concrete bases for packaged engine generators[**and remote radiators mounted on grade**]. Cast anchor-bolt inserts into bases. Concrete, reinforcement, and formwork requirements are specified with concrete.
3. Install [**packaged engine generator**] [**engine generator in a walk-in enclosure**] with [**elastomeric isolator pads**] [**restrained spring isolators**] having a minimum deflection of [**2 inch**] on 4-inch- high concrete base. Secure [**engine generator**] [**enclosure**] to anchor bolts installed in concrete bases.
4. Remote Radiators:

a. Install remote radiator with [**elastomeric isolator pads**] [**restrained spring isolators**] on [**concrete base on grade**] [**roof equipment supports on roof**].
b. Coordinate size and location of roof curbs, equipment supports, and roof penetrations for remote radiators.

D. Install packaged engine generator to provide access, without removing connections or accessories, for periodic maintenance.

E. Cooling System: Install Schedule 40, black steel piping with welded joints for cooling water piping between engine generator and [**heat exchanger**] [**remote radiator**].

1. Install isolating thimbles where exhaust piping penetrates combustible surfaces. Provide a minimum of 9 inches clearance from combustibles.

F. Exhaust System: Install Schedule 40, black steel piping with welded joints and connect to engine muffler. Install thimble at wall. Piping shall be same diameter as muffler outlet.

1. Install isolating thimbles where exhaust piping penetrates combustible surfaces with a minimum of 9-inch clearance from combustibles.

G. Drain Piping: Install condensate drain piping to muffler drain outlet with a shutoff valve, stainless-steel flexible connector, and Schedule 40, black steel pipe, the full size of the drain connection, with welded joints.

H. Electrical Wiring: Install electrical devices furnished by equipment manufacturers but not specified to be factory mounted.

3.4 CONNECTIONS

A. Piping installation requirements are specified in other Sections. Drawings indicate general arrangement of piping and specialties.

B. Connect fuel, cooling-system, and exhaust-system piping adjacent to packaged engine generator to allow service and maintenance.

C. Connect cooling-system water piping to engine generator and [**remote radiator**] [**heat exchanger**] with flexible connectors.

D. Connect engine exhaust pipe to engine with flexible connector.

E. Gaseous Fuel Connections:

1. Connect fuel piping to engines with a gate valve and union and flexible connector.
2. Install manual shutoff valve in a remote location to isolate gaseous fuel supply to the generator.
3. Vent gas pressure regulators outside building a minimum of 60 inches from building openings.

F. Provide a minimum of one 90-degree bend in flexible conduit routed to the engine generator from a stationary element.

G. Balance single-phase loads to obtain a maximum of 10 percent unbalance between any two phases.

3.5 IDENTIFICATION

A. Install a sign indicating the generator neutral is bonded to the main service neutral at the main service location.

3.6 FIELD QUALITY CONTROL

A. Testing Agency:

1. Director’s Representative will engage a qualified testing agency to perform tests and inspections.
2. Engage a qualified testing agency to perform tests and inspections.
3. Engage a Company Service Advisor to test and inspect components, assemblies, and equipment installations, including connections.
4. Perform tests and inspections[**with the assistance of a Company Service Advisor**].

B. Tests and Inspections:

1. Perform tests recommended by manufacturer and each visual and mechanical inspection and electrical and mechanical test listed in the first two subparagraphs below as specified in the NETA ATS. Certify compliance with test parameters.

a. Visual and Mechanical Inspection:

1) Compare equipment nameplate data with drawings and specifications.
2) Inspect physical and mechanical condition.
3) Inspect anchorage, alignment, and grounding.
4) Verify the unit is clean.

b. Electrical and Mechanical Tests:

1) Perform insulation-resistance tests in accordance with IEEE 43.

a) Machines larger than 200 hp. Test duration shall be 10 minutes. Calculate polarization index.
b) Machines 200 hp or less. Test duration shall be one minute. Calculate the dielectric-absorption ratio.

2) Test protective relay devices.
3) Verify phase rotation, phasing, and synchronized operation as required by the application.
4) Functionally test engine shutdown for low oil pressure, overtemperature, overspeed, and other protection features as applicable.
5) Perform vibration test for each main bearing cap.
6) Verify correct functioning of the governor and regulator.

2. NFPA 110 Acceptance Tests: Perform tests required by NFPA 110 that are additional to those specified here, including, but not limited to, single-step full-load pickup test.
3. Battery Tests: Equalize charging of battery cells according to manufacturer's written instructions. Record individual cell voltages.

a. Measure charging voltage and voltages between available battery terminals for full-charging and float-charging conditions. Check electrolyte level and specific gravity under both conditions.
b. Test for contact integrity of all connectors. Perform an integrity load test and a capacity load test for the battery.
c. Verify acceptance of charge for each element of the battery after discharge.
d. Verify that measurements are within manufacturer's specifications.

4. Battery-Charger Tests: Verify specified rates of charge for both equalizing and float-charging conditions.
5. System Integrity Tests: Methodically verify proper installation, connection, and integrity of each element of engine generator system before and during system operation. Check for air, exhaust, and fluid leaks.
6. Exhaust-System Back-Pressure Test: Use a manometer with a scale exceeding 40-inch wg. Connect to exhaust line close to engine exhaust manifold. Verify that back pressure at full-rated load is within manufacturer's written allowable limits for the engine.
7. Exhaust Emissions Test: Comply with applicable government test criteria.
8. Voltage and Frequency Transient Stability Tests: Use recording oscilloscope to measure voltage and frequency transients for 50 and 100 percent step-load increases and decreases, and verify that performance is as specified.
9. Harmonic-Content Tests: Measure harmonic content of output voltage at 25 percent and 100 percent of rated linear load. Verify that harmonic content is within specified limits.
10. Noise Level Tests: Measure A-weighted level of noise emanating from generator-set installation, including engine exhaust and cooling-air intake and discharge, at [**four**] locations [**25 feet from edge of the generator enclosure**] [**on the property line**] , and compare measured levels with required values.

C. Coordinate tests with tests for transfer switches and run them concurrently.

D. Test instruments shall have been calibrated within the last 12 months, traceable to NIST Calibration Services, and adequate for making positive observation of test results. Make calibration records available for examination on request.

E. Leak Test: After installation, charge exhaust, coolant, and fuel systems and test for leaks. Repair leaks and retest until no leaks exist.

F. Operational Test: After electrical circuitry has been energized, start units to confirm proper motor rotation and unit operation for generator and associated equipment.

G. Test and adjust controls and safeties. Replace damaged and malfunctioning controls and equipment.

H. Remove and replace malfunctioning units and [**retest**] [**reinspect**] as specified above.

I. Retest: Correct deficiencies identified by tests and observations and retest until specified requirements are met.

J. Report results of tests and inspections in writing. Record adjustable relay settings and measured insulation resistances, time delays, and other values and observations. Attach a label or tag to each tested component indicating satisfactory completion of tests.

K. Infrared Scanning: After Substantial Completion, but not more than 60 days after final acceptance, perform an infrared scan of each power wiring termination and each bus connection while running with maximum load. Remove all access panels so terminations and connections are accessible to portable scanner.

1. Follow-up Infrared Scanning: Perform an additional follow-up infrared scan 11 months after date of Substantial Completion.
2. Instrument: Use an infrared scanning device designed to measure temperature or to detect significant deviations from normal values. Provide calibration record for device.
3. Record of Infrared Scanning: Prepare a certified report that identifies terminations and connections checked and that describes scanning results. Include notation of deficiencies detected, remedial action taken, and observations after remedial action.

3.7 MAINTENANCE SERVICE

A. Initial Maintenance Service: Beginning at Substantial Completion, provide [**12**] months' full maintenance by skilled employees of manufacturer's designated service organization. Include quarterly exercising to check for proper starting, load transfer, and running under load. Include routine preventive maintenance as recommended by manufacturer and adjusting as required for proper operation. Provide parts and supplies same as those used in the manufacture and installation of original equipment.

3.8 DEMONSTRATION

A. Engage a Company Service Advisor to train Director’s Representative's maintenance personnel to adjust, operate, and maintain packaged engine generators.

END OF SECTION 263213

SECTION 263600

TRANSFER SWITCHES

PART 1 - GENERAL

1.1 RELATED DOCUMENTS

1.2 SUMMARY

A. Section Includes:

1. Contactor-type automatic transfer switches.
2. Molded-case-type automatic transfer switches.
3. Nonautomatic transfer switches.
4. Transfer switch accessories.

1.3 TRANSFER SWITCH OPERATING DESCRIPTION

A. Design Criteria: The transfer switch is required to:

1. Transmit signals to the diesel-alternator indicating when the unit should start and stop.

B. Description of Operation:

1. The transfer switch monitors electrical parameters of normal and emergency feeders.
2. In normal operating condition, the mechanism of the transfer switch is in the normal position and the natural gas (Section 263213) unit shut down. Sequence of transfer operation occurs as follows:

   a. The voltage on any phase of the normal feeder drops below 85 percent of normal, initiating in the transfer switch an adjustable time delay (set at 2 seconds) to over-ride voltage fluctuations and momentary outages.
   b. At the end of the adjustable time delay, the diesel-alternator unit is signaled to automatically start.
   c. A voltage-frequency device in the transfer switch prevents transfer until the emergency feeder voltage rises to 90 percent of normal and the frequency reaches 95% nominal.
   d. The transfer switch transfers load to the emergency feeder.
   e. Complete transition from onset of normal feeder failure to emergency feeder transfer shall not exceed 10 seconds.
   f. When voltage on all phases of the normal feeder is restored to 90 percent voltage, transfer from emergency to normal feeder is initiated with an adjustable time delay (5-25 minutes) in the transfer switch, and:

      1) An auxiliary device (in-phase monitoring or programmed transition) in the transfer switch assures the normal and emergency power sources are synchronized, or induction motors have reached a safe transfer point before the transfer is made. Set the adjustable time delay for the programmed transition to 2 seconds or, if obtainable, the open circuit time constant (OCTC) of the largest motor to be on the emergency system.
      2) Presignal adjustable transfer time delay contacts in the transfer switch provides a 15 second pre-transfer signal prior to transfer to allow elevator(s) to stop at the nearest floor and shut down.

g. When voltage on all phases of the normal feeder is restored to 90 percent voltage, transfer from emergency to normal feeder is initiated with an adjustable time delay (set at 30 minutes) in the transfer switch, and:

1) An auxiliary device (in-phase monitoring or programmed transition) in the transfer switch assures the normal and emergency power sources are synchronized, or induction motors have reached a safe transfer point before the transfer is made. Set the adjustable time delay for the programmed transition to 2 seconds or, if obtainable, the open circuit time constant (OCTC) of the largest motor to be on the emergency system.
2) Presignal adjustable transfer time delay contacts in the transfer switch provides a 15 second pre-transfer signal prior to transfer to allow elevator(s) to stop at the nearest floor and shut down.

h. The transfer switch transfers load to the normal feeder at the end of the time delay.
i. The transfer switch transfers load to the normal feeder at the end of the time delay. Exception: If the emergency power source should fail and the normal power source has been restored, retransfer to the normal source of power shall be immediate, by passing the retransfer delay timer.
j. The presignal transfer time delay contacts reset immediately after the transfer has been completed.
k. The unit continues to run unloaded 5 minutes, after which the control equipment shuts down the engine and resets the system.
l. Permanently attached manual operating handle(s) allow for safe manual transfer under load. The switch operating speed is the same operated electrically or manually.

3. In test operating condition, the mechanism of the transfer switch is in the normal position and the diesel-alternator unit shut down. Upon activation of test switch, sequence of transfer operation occurs as follows:

a. At the end of a adjustable time delay (set at 2 seconds), the diesel-alternator unit is signaled to automatically start.
b. A voltage-frequency device in the transfer switch prevents transfer until the emergency feeder voltage rises to 90 percent of normal and the proper electrical parameters are obtained.
c. An auxiliary device (in-phase monitoring or programmed transition) in the transfer switch assures the normal and emergency power sources are synchronized, or induction motors have reached a safe transition point before the transfer is made. Set the adjustable time delay for the programmed transition to 2 seconds or, if obtainable, the open circuit time constant (OCTC) of the largest motor to be on the emergency system.
d. Presignal adjustable transfer time delay contacts in the transfer switch provide a 15 second pre-transfer signal prior to transfer to allow elevator(s) to stop at the nearest floor and shut down.
e. The transfer switch transfers load to the emergency feeder.
f. The presignal transfer time delay contacts reset immediately after the transfer has been completed.
g. The transfer switch has provisions to test the diesel-alternator unit under load and unloaded.
h. Complete transition from onset of normal feeder failure to emergency feeder transfer shall not exceed 10 seconds. Exception: Elevator feeders (15 seconds).
i. When voltage on all phases of the normal feeder is restored to 90 percent voltage, transfer from emergency to normal feeder is initiated with an adjustable time delay (5-25 minutes) in the transfer switch, and:

1) An auxiliary device (in-phase monitoring or programmed transition) in the transfer switch assures the normal and emergency power sources are synchronized, or induction motors have reached a safe transfer point before the transfer is made. Set the adjustable time delay for the programmed transition to 2 seconds or, if obtainable, the open circuit time constant (OCTC) of the largest motor to be on the emergency system.
2) Presignal adjustable transfer time delay contacts in the transfer switch provide a 15 second pre-transfer signal prior to transfer to allow elevator(s) to stop at the nearest floor and shut down.

j. When voltage on all phases of the normal feeder is restored to 90 percent voltage, transfer from emergency to normal feeder is initiated with an adjustable time delay (set at 30 minutes) in the transfer switch, and:

1) An auxiliary device (in-phase monitoring or programmed transition) in the transfer switch assures the normal and emergency power sources are synchronized, or induction motors have reached a safe transfer point before the transfer is made. Set the adjustable time delay for the programmed transition to 2 seconds or, if obtainable, the open circuit time constant (OCTC) of the largest motor to be on the emergency system.
2) Presignal adjustable transfer time delay contacts in the transfer switch provide a 15 second pre-transfer signal prior to transfer to allow elevator(s) to stop at the nearest floor and shut down.

k. The transfer switch transfers load to the normal feeder at the end of the time delay.
l. The transfer switch transfers load to the normal feeder at the end of the time delay. Exception: If the emergency power source should fail and the normal power source has been restored, retransfer to the normal source of power shall be immediate, by passing the retransfer delay timer.
m. The presignal transfer time delay contacts reset back to normal immediately after the transfer has been completed.
n. The unit continues to run unloaded 5 minutes, after which the control equipment shuts down the engine and resets the system.

1.4 SUBMITTALS

A. Submittals for this section are subject to the re-evaluation fee identified in Article 4 of the General Conditions.

B. Manufacturer's installation instructions shall be provided along with product data.

C. Submittals shall be provided in the order in which they are specified and tabbed (for combined submittals).

D. Product Data: For each type of product.

1. Include construction details, material descriptions, dimensions of individual components and profiles, and finishes for transfer switches.
2. Include rated capacities, operating characteristics, electrical characteristics, and accessories.

E. Shop Drawings:

1. Include plans, elevations, sections, details showing minimum clearances, conductor entry provisions, gutter space, and installed features and devices.
2. Include material lists for each switch specified.
3. Single-Line Diagram: Show connections between transfer switch, [**bypass/isolation switch,**]power sources, and load; and show interlocking provisions for each combined transfer switch and bypass/isolation switch.
4. Riser Diagram: Show interconnection wiring between transfer switches, bypass/isolation switches, annunciators, and control panels.

F. Submittals for this section are subject to the re-evaluation fee identified in Article 4 of the General Conditions.

G. Qualification Data: For [**manufacturer-authorized service representative**] [**testing agency**].

H. Seismic Qualification Data: Certificates, for transfer switches, accessories, and components, from manufacturer.

1. Basis for Certification: Indicate whether withstand certification is based on actual test of assembled components or on calculation.
2. Dimensioned Outline Drawings of Equipment Unit: Identify center of gravity and locate and describe mounting and anchorage provisions.
3. Detailed description of equipment anchorage devices on which the certification is based and their installation requirements.

I. Field quality-control reports.

1.5 CLOSEOUT SUBMITTALS

A. Operation and Maintenance Data: For each type of product to include in emergency, operation, and maintenance manuals.

1. In addition to items specified in Section 017823 "Operation and Maintenance Data," include the following:

a. Features and operating sequences, both automatic and manual.
b. List of all factory settings of relays; provide relay-setting and calibration instructions, including software, where applicable.

1.6 QUALITY ASSURANCE

A. Testing Agency Qualifications:

1. Member company of NETA.

a. Testing Agency's Field Supervisor: Certified by NETA to supervise on-site testing.

B. List of Completed Installations: If brand names other than those specified are proposed for use, furnish the name, address and telephone number of a least 5 comparable installations which can prove the proposed products have operated satisfactorily for 3 years.

C. Company Field Advisor: Secure the services of a Company Field Advisor for a minimum of 8 working hours for the following:

1. Render advice regarding installation and final adjustment of the switch.
2. Witness final switch/system test and then certify with an affidavit that the switch is installed in accordance with the contract documents and is operating properly.
3. Train facility personnel on the operation and maintenance of the switch (minimum of one 2 hour session).
4. Explain available service programs to facility supervisory personnel for their consideration.

D. Service Availability: A fully equipped service organization capable of guaranteeing response time within 8 hours to service calls shall be available 24 hours a day, 7 days a week to service the completed Work.

1.7 FIELD CONDITIONS

A. Interruption of Existing Electrical Service: Do not interrupt electrical service to facilities occupied by Owner’s Representative or others unless permitted under the following conditions and then only after arranging to provide temporary electrical service:

1. Notify [**Architect**] [**Construction Manager**] [Owner**’s Representative**] no fewer than [**two**] days in advance of proposed interruption of electrical service.
2. Do not proceed with interruption of electrical service without [**Architect's**] [**Construction Manager's**] [Owner**’s Representative's**] written permission.

1.8 WARRANTY

A. Manufacturer's Warranty: Manufacturer agrees to repair or replace components of transfer switch or transfer switch components that fail in materials or workmanship within specified warranty period.

1. Warranty Period: [**Two years**] from date of Substantial Completion.

1.9 Spare Parts:

A. Special tools if required for the regular maintenance and minor repairs of the switch.

PART 2 - PRODUCTS

2.1 PERFORMANCE REQUIREMENTS

A. Electrical Components, Devices, and Accessories: Listed and labeled as defined in NFPA 70, by a qualified testing agency, and marked for intended location and application.

B. Comply with NEMA ICS 1.

C. Comply with NFPA 99.

D. Comply with NFPA 110.

E. Comply with UL 1008 unless requirements of these Specifications are stricter.

F. Indicated Current Ratings: Apply as defined in UL 1008 for continuous loading and total system transfer, including tungsten filament lamp loads not exceeding 30 percent of switch ampere rating, unless otherwise indicated.

G. Tested Fault-Current Closing and Short-Circuit Ratings: Adequate for duty imposed by protective devices at installation locations in Project under the fault conditions indicated, based on testing according to UL 1008.

1. Where transfer switch includes internal fault-current protection, rating of switch and trip unit combination shall exceed indicated fault-current value at installation location.
2. Short-time withstand capability for [**three**] [**30**] cycles.

H. Repetitive Accuracy of Solid-State Controls: All settings shall be plus or minus 2 percent or better over an operating temperature range of minus 20 to plus 70 deg C.

I. Resistance to Damage by Voltage Transients: Components shall meet or exceed voltage-surge withstand capability requirements when tested according to IEEE C62.62. Components shall meet or exceed voltage-impulse withstand test of NEMA ICS 1.

J. Electrical Operation: Accomplish by a nonfused, momentarily energized solenoid or electric-motor-operated mechanism. Switches for emergency or standby purposes shall be mechanically and electrically interlocked in both directions to prevent simultaneous connection to both power sources unless closed transition.

K. Service-Rated Transfer Switch:

1. Comply with UL 869A and UL 489.
2. Provide terminals for bonding the grounding electrode conductor to the grounded service conductor.
3. In systems with a neutral, the bonding connection shall be on the neutral bus.
4. Provide removable link for temporary separation of the service and load grounded conductors.
5. Surge Protective Device: Service rated.
6. Ground-Fault Protection: Comply with UL 1008 for [**normal bus**] [**normal and alternative buses**].
7. Service Disconnecting Means: Externally operated, manual [**mechanically**] [**electrically**] actuated.

L. Neutral Switching: Where four-pole switches are indicated, provide [**neutral pole switched simultaneously with phase poles**] [**overlapping neutral contacts**].

M. Neutral Terminal: Solid and fully rated unless otherwise indicated.

N. Oversize Neutral: Ampacity and switch rating of neutral path through units indicated for oversize neutral shall be double the nominal rating of circuit in which switch is installed.

O. Heater: Equip switches exposed to outdoor temperatures and humidity, and other units indicated, with an internal heater. Provide thermostat within enclosure to control heater.

P. Battery Charger: For generator starting batteries.

1. Float type, rated [**2**] [**10**] A.
2. Ammeter to display charging current.
3. Fused ac inputs and dc outputs.

Q. Annunciation, Control, and Programming Interface Components: Devices at transfer switches for communicating with remote programming devices, annunciators, or annunciator and control panels shall have communication capability matched with remote device.

R. In-phase Monitor, or Programmed Transition (Programmed transition adjustable 0-6 second time delay, factory set at 2 seconds).

S. Presignal transfer time delay contact closure (time adjustable, factory set at 15 seconds).

T. Two identified pilot lights to indicate switch position (green normal, red emergency).

U. Start contacts, silver plating.

V. Auxiliary contact on main shaft (closed on normal).

W. Auxiliary contact on main shaft (closed on emergency).

X. Automatic exerciser for exercising the referenced diesel-alternator engine (no transfer to emergency feeder), minimum 30 minutes every 168 hours (7 days).

Y. Automatic exerciser for exercising the referenced diesel-alternator engine (transfer to emergency feeder) minimum 30 minutes every 168 hours (7 days).

Z. Equipment ground lug.

AA. Communications interface to work with the Remote Annunciator.

BB. Live parts shielded from personnel when door is open.

CC. Factory Wiring: Train and bundle factory wiring and label, consistent with Shop Drawings, by color-code or by numbered or lettered wire and cable [**with printed**] [**tape**] [**shrinkable sleeve**] markers at terminations. Color-coding and wire and cable markers are specified in Section 260553 "Identification for Electrical Systems."

1. Designated Terminals: Pressure type, suitable for types and sizes of field wiring indicated.
2. Power-Terminal Arrangement and Field-Wiring Space: Suitable for top, side, or bottom entrance of feeder conductors as indicated.
3. Control Wiring: Equipped with lugs suitable for connection to terminal strips.
4. Accessible via [**rear**] [**front**] access.

DD. Enclosures: General-purpose NEMA 250, [**Type 3R**] [**Type 4X**], complying with NEMA ICS 6 and UL 508, unless otherwise indicated.

2.2 CONTACTOR-TYPE AUTOMATIC TRANSFER SWITCHES

A. Manufacturers: Subject to compliance with requirements, available manufacturers offering products that may be incorporated into the Work include, but are not limited to the following:

1. Cummins.
2. Or equal.

B. Comply with Level 1 equipment according to NFPA 110.

C. Switch Characteristics: Designed for continuous-duty repetitive transfer of full-rated current between active power sources.

1. Limitation: Switches using molded-case switches or circuit breakers or insulated-case circuit-breaker components are unacceptable.
2. Switch Action: Double throw; mechanically held in both directions.
3. Contacts: Silver composition or silver alloy for load-current switching. Contactor-style automatic transfer-switch units, rated 600 A and higher, shall have separate arcing contacts.
4. Conductor Connectors: Suitable for use with conductor material and sizes.
5. Material:[**Hard-drawn copper, 98 percent conductivity**].
6. Main and Neutral Lugs: [**Compression**] type.
7. Ground Lugs and Bus-Configured Terminators: [**Compression**] type.
8. Ground bar.
9. Connectors shall be marked for conductor size and type according to UL 1008.

D. Automatic Open-Transition Transfer Switches: Interlocked to prevent the load from being closed on both sources at the same time.

1. Sources shall be mechanically and electrically interlocked to prevent closing both sources on the load at the same time.

E. Automatic Delayed-Transition Transfer Switches: Pauses or stops in intermediate position to momentarily disconnect both sources, with transition controlled by programming in the automatic transfer-switch controller. Interlocked to prevent the load from being closed on both sources at the same time.

1. Adjustable Time Delay: For override of normal-source voltage sensing to delay transfer and engine start signals for alternative source. Adjustable from zero to six seconds, and factory set for one second.
2. Sources shall be mechanically and electrically interlocked to prevent closing both sources on the load at the same time.
3. Fully automatic break-before-make operation with center off position.
4. Fully automatic break-before-make operation with transfer when two sources have near zero phase difference.

F. Automatic Closed-Transition Transfer Switches: Connect both sources to load momentarily. Transition is controlled by programming in the automatic transfer-switch controller.

1. Fully automatic make-before-break operation when transferring between two available power sources.
2. Load transfer without interruption, through momentary interconnection of both power sources not exceeding 100 ms.
3. Initiation of No-Interruption Transfer: Controlled by in-phase monitor and sensors confirming both sources are present and acceptable.

a. Initiation occurs without active control of generator.
b. Automatic transfer-switch controller takes active control of generator to match frequency, phase angle, and voltage.
c. Controls ensure that closed-transition load transfer closure occurs only when the two sources are within plus or minus 5 electrical degrees maximum, and plus or minus 5 percent maximum voltage difference.

4. Failure of power source serving load initiates automatic break-before-make transfer.

G. Manual Switch Operation, Load-Breaking: Under load, with door closed and with either or both sources energized. Transfer time is same as for electrical operation. Control circuit automatically disconnects from electrical operator during manual operation.

H. Manual Switch Operation, Non-Load-Breaking: Unloaded. Control circuit automatically disconnects from electrical operator during manual operation.

I. Electric [**Nonautomatic**]Switch Operation: Electrically actuated by push buttons designated "Normal Source" and "Alternative Source." Switch shall be capable of transferring load in either direction with either or both sources energized.

J. Signal-Before-Transfer Contacts: A set of normally open/normally closed dry contacts operates in advance of retransfer to normal source. Interval shall be adjustable from 1 to 30 seconds.

K. Digital Communication Interface: Matched to capability of remote annunciator or annunciator and control panel.

L. Automatic Transfer-Switch Controller Features:

1. Controller operates through a period of loss of control power.
2. Undervoltage Sensing for Each Phase of Normal [**and Alternate**]Source: Sense low phase-to-ground voltage on each phase. Pickup voltage shall be adjustable from 85 to 100 percent of nominal, and dropout voltage shall be adjustable from 75 to 98 percent of pickup value. Factory set for pickup at 90 percent and dropout at 85 percent.
3. Voltage/Frequency Lockout Relay: Prevent premature transfer to generator. Pickup voltage shall be adjustable from 85 to 100 percent of nominal. Factory set for pickup at 90 percent. Pickup frequency shall be adjustable from 90 to 100 percent of nominal. Factory set for pickup at 95 percent.
4. Time Delay for Retransfer to Normal Source: Adjustable from zero to 30 minutes, and factory set for 10 minutes. Override shall automatically defeat delay on loss of voltage or sustained undervoltage of emergency source, provided normal supply has been restored.
5. Test Switch: Simulate normal-source failure.
6. Switch-Position Pilot Lights: Indicate source to which load is connected.
7. Source-Available Indicating Lights: Supervise sources via transfer-switch normal- and emergency-source sensing circuits.

    a. Normal Power Supervision: Green light with nameplate engraved "Normal Source Available."
    b. Emergency Power Supervision: Red light with nameplate engraved "Emergency Source Available."

8. Unassigned Auxiliary Contacts: Two normally open, single-pole, double-throw contacts for each switch position, rated 10 A at 240-V ac.
9. Transfer Override Switch: Overrides automatic retransfer control so transfer switch will remain connected to emergency power source regardless of condition of normal source. Pilot light indicates override status.
10. Engine Starting Contacts: One isolated and normally closed, and one isolated and normally open; rated 10 A at 32-V dc minimum.
11. Engine Shutdown Contacts:

    a. Instantaneous; shall initiate shutdown sequence at remote engine-generator controls after retransfer of load to normal source.
    b. Time delay adjustable from zero to five minutes, and factory set for five minutes. Contacts shall initiate shutdown at remote engine-generator controls after retransfer of load to normal source.

12. Engine-Generator Exerciser: Solid-state, programmable-time switch starts engine generator and transfers load to it from normal source for a preset time, then retransfers and shuts down engine after a preset cool-down period. Initiates exercise cycle at preset intervals adjustable from 7 to 30 days. Running periods shall be adjustable from 10 to 30 minutes. Factory settings shall be for 7-day exercise cycle, 20-minute running period, and 5-minute cool-down period. Exerciser features include the following:

    a. Exerciser Transfer Selector Switch: Permits selection of exercise with and without load transfer.

b. Push-button programming control with digital display of settings.
c. Integral battery operation of time switch when normal control power is unavailable.

M. Large-Motor-Load Power Transfer:

1. In-Phase Monitor: Factory-wired, internal relay controls transfer so contacts close only when the two sources are synchronized in phase and frequency. Relay shall compare phase relationship and frequency difference between normal and emergency sources and initiate transfer when both sources are within 15 electrical degrees, and only if transfer can be completed within 60 electrical degrees. Transfer shall be initiated only if both sources are within 2 Hz of nominal frequency and 70 percent or more of nominal voltage.
2. Motor Disconnect and Timing Relay Controls: Designated starters in loss of power scenario shall disconnect motors before transfer and reconnect them selectively at an adjustable time interval after transfer. Control connection to motor starters shall be through wiring external to automatic transfer switch. Provide adjustable time delay between 1 and 60 seconds for reconnecting individual motor loads. Provide relay contacts rated for motor-control circuit inrush and for actual seal currents to be encountered.
3. Programmed Neutral Switch Position: Switch operator with programmed neutral position arranged to provide a midpoint between the two working switch positions, with an intentional, time-controlled pause at midpoint during transfer. Adjustable pause from 0.5 to 30 seconds minimum, and factory set for 0.5 second unless otherwise indicated. Time delay occurs for both transfer directions. Disable pause unless both sources are live.

2.3 MOLDED-CASE-TYPE AUTOMATIC TRANSFER SWITCHES

A. Manufacturers: Subject to compliance with requirements, available manufacturers offering products that may be incorporated into the Work include, but are not limited to the following:

1. Automatic Switch Company.
2. Russelectric Inc.
3. Zenith Controls Inc.
4. Or equal.

B. Comply with Level 1 equipment according to NFPA 110.

C. Switch Characteristics: Designed for continuous-duty repetitive transfer of full-rated current between active power sources.

1. Limitation: Switches using contactor-based components are unacceptable.
2. Switch Action: Double throw; mechanically held in both directions.
3. Contacts: Silver composition or silver alloy for load-current switching.
4. Conductor Connectors: Suitable for use with conductor material and sizes.
5. Material: [**Hard-drawn copper, 98 percent conductivity**].
6. Main and Neutral Lugs: [**Compression**]type.
7. Ground Lugs and Bus-Configured Terminators: [**Compression**] type.
8. Ground bar.
9. Connectors shall be marked for conductor size and type according to UL 1008.

D. Automatic Open-Transition Transfer Switches: Interlocked to prevent the load from being closed on both sources at the same time.

1. Sources shall be mechanically and electrically interlocked to prevent closing both sources on the load at the same time.

E. Automatic Delayed-Transition Transfer Switches: Pauses or stops in intermediate position to momentarily disconnect both sources, with transition controlled by programming in the automatic transfer-switch controller. Interlocked to prevent the load from being closed on both sources at the same time.

1. Adjustable Time Delay: For override of normal-source voltage sensing to delay transfer and engine start signals for alternative source. Adjustable from zero to six seconds, and factory set for one second.
2. Sources shall be mechanically and electrically interlocked to prevent closing both sources on the load at the same time.
3. Fully automatic break-before-make operation with center off position.
4. Fully automatic break-before-make operation with transfer when two sources have near zero phase difference.

F. Automatic Closed-Transition Transfer Switches: Connect both sources to load momentarily. Transition is controlled by programming in the automatic transfer-switch controller.

1. Fully automatic make-before-break operation when transferring between two available power sources.
2. Load transfer without interruption, through momentary interconnection of both power sources not exceeding 100 ms.
3. Initiation of No-Interruption Transfer: Controlled by in-phase monitor and sensors confirming both sources are present and acceptable.

    a. Initiation occurs without active control of generator.
    b. Automatic transfer-switch controller takes active control of generator to match frequency, phase angle, and voltage.
    c. Controls ensure that closed-transition load transfer closure occurs only when the two sources are within plus or minus 5 electrical degrees maximum, and plus or minus 5 percent maximum voltage difference.

4. Failure of power source serving load initiates automatic break-before-make transfer.

G. Manual Switch Operation, Load-Breaking: Under load, with door closed and with either or both sources energized. Transfer time is same as for electrical operation. Control circuit automatically disconnects from electrical operator during manual operation.

H. Manual Switch Operation, Non-Load-Breaking: Unloaded. Control circuit automatically disconnects from electrical operator during manual operation.

I. Electric [**Nonautomatic**]Switch Operation: Electrically actuated by push buttons designated "Normal Source" and "Alternative Source." Switch shall be capable of transferring load in either direction with either or both sources energized.

J. Signal-Before-Transfer Contacts: A set of normally open/normally closed dry contacts operates in advance of retransfer to normal source. Interval shall be adjustable from 1 to 30 seconds.

K. Digital Communication Interface: Matched to capability of remote annunciator or annunciator and control panel.

L. Transfer Switches Based on Molded-Case-Switch Components: Comply with UL 489 and UL 869A.

M. Automatic Transfer-Switch Controller Features:

1. Controller operates through a period of loss of control power.
2. Undervoltage Sensing for Each Phase of Normal [**and Alternative**]Source: Sense low phase-to-ground voltage on each phase. Pickup voltage shall be adjustable from 85 to 100 percent of nominal, and dropout voltage shall be adjustable from 75 to 98 percent of pickup value. Factory set for pickup at 90 percent and dropout at 85 percent.
3. Voltage/Frequency Lockout Relay: Prevent premature transfer to generator. Pickup voltage shall be adjustable from 85 to 100 percent of nominal. Factory set for pickup at 90 percent. Pickup frequency shall be adjustable from 90 to 100 percent of nominal. Factory set for pickup at 95 percent.
4. Time Delay for Retransfer to Normal Source: Adjustable from zero to 30 minutes, and factory set for 10 minutes. Override shall automatically defeat delay on loss of voltage or sustained undervoltage of emergency source, provided normal supply has been restored.
5. Test Switch: Simulate normal-source failure.
6. Switch-Position Pilot Lights: Indicate source to which load is connected.
7. Source-Available Indicating Lights: Supervise sources via transfer-switch normal- and emergency-source sensing circuits.

a. Normal Power Supervision: Green light with nameplate engraved "Normal Source Available."
b. Emergency Power Supervision: Red light with nameplate engraved "Emergency Source Available."

8. Unassigned Auxiliary Contacts: Two normally open, single-pole, double-throw contacts for each switch position, rated 10 A at 240-V ac.
9. Transfer Override Switch: Overrides automatic retransfer control so automatic transfer switch will remain connected to emergency power source regardless of condition of normal source. Pilot light indicates override status.
10. Engine Starting Contacts: One isolated and normally closed, and one isolated and normally open; rated 10 A at 32-V dc minimum.
11. Engine Shutdown Contacts:

    a. Instantaneous; shall initiate shutdown sequence at remote engine-generator controls after retransfer of load to normal source.
    b. Time delay adjustable from zero to five minutes, and factory set for five minutes. Contacts shall initiate shutdown at remote engine-generator controls after retransfer of load to normal source.

12. Engine-Generator Exerciser: Solid-state, programmable-time switch starts engine generator and transfers load to it from normal source for a preset time, then retransfers and shuts down engine after a preset cool-down period. Initiates exercise cycle at preset intervals adjustable from 7 to 30 days. Running periods shall be adjustable from 10 to 30 minutes. Factory settings shall be for 7-day exercise cycle, 20-minute running period, and 5-minute cool-down period. Exerciser features include the following:

    a. Exerciser Transfer Selector Switch: Permits selection of exercise with and without load transfer.
    b. Push-button programming control with digital display of settings.
    c. Integral battery operation of time switch when normal control power is unavailable.

N. Large-Motor-Load Power Transfer:

1. In-Phase Monitor: Factory-wired, internal relay controls transfer so contacts close only when the two sources are synchronized in phase and frequency. Relay shall compare phase relationship and frequency difference between normal and emergency sources and initiate transfer when both sources are within 15 electrical degrees, and only if transfer can be completed within 60 electrical degrees. Transfer shall be initiated only if both sources are within 2 Hz of nominal frequency and 70 percent or more of nominal voltage.
2. Motor Disconnect and Timing Relay Controls: Designated starters in loss of power scenario shall disconnect motors before transfer and reconnect them selectively at an adjustable time interval after transfer. Control connection to motor starters shall be through wiring external to automatic transfer switch. Provide adjustable time delay between 1 and 60 seconds for reconnecting individual motor loads. Provide relay contacts rated for motor-control circuit inrush and for actual seal currents to be encountered.
3. Programmed Neutral Switch Position: Switch operator with programmed neutral position arranged to provide a midpoint between the two working switch positions, with an intentional, time-controlled pause at midpoint during transfer. Adjustable pause from 0.5 to 30 seconds minimum, and factory set for 0.5 second unless otherwise indicated. Time delay occurs for both transfer directions. Disable pause unless both sources are live.

2.4 NONAUTOMATIC TRANSFER SWITCHES

A. Manufacturers: Subject to compliance with requirements, available manufacturers offering products that may be incorporated into the Work include, but are not limited to the following:

1. Cummins.
2. Or approved equal.

B. Electrically Operated: Electrically actuated by push buttons designated "Normal Source" and "Alternative Source." Switch shall be capable of transferring load in either direction with either or both sources energized.

C. Manual and Electrically Operated: Electrically actuated by push buttons designated "Normal Source" and "Alternative Source." Manual handle provides quick-make, quick-break manual-switching action. Switch shall be capable of

electrically or manually transferring load in either direction with either or both sources energized. Control circuit disconnects from electrical operator during manual operation.

D. Double-Throw Switching Arrangement: Incapable of pauses or intermediate position stops during switching sequence.

E. Pilot Lights: Indicate source to which load is connected.

F. Source-Available Indicating Lights: Supervise sources via transfer-switch normal- and alternative-source sensing circuits.

1. Normal Power Supervision: Green light with nameplate engraved "Normal Source Available."
2. Emergency Power Supervision: Red light with nameplate engraved "Alternative Source Available."

G. Unassigned Auxiliary Contacts: Switch shall have one set of normally closed contacts for each switch position, rated 10 A at 240-V ac.

H. Switch Characteristics: Designed for continuous-duty repetitive transfer of full-rated current between active power sources.

1. Switch Action: Double throw; mechanically held in both directions.
2. Contacts: Silver composition or silver alloy for load-current switching.
3. Conductor Connectors: Suitable for use with conductor material and sizes.
4. Material: [**Hard-drawn copper, 98 percent conductivity**].
5. Main and Neutral Lugs: [**Compression**] type.
6. Ground Lugs and Bus-Configured Terminators: [**Compression**] type.
7. Ground bar.
8. Connectors shall be marked for conductor size and type according to UL 1008.
9. <**Insert features**>.

2.5 MANUAL TRANSFER SWITCHES

A. Challenger's Double Throw Safety Switches, Cutler-Hammer Inc.'s DT-K, General Electric Co.'s Type TC, Square D Co.'s Double Throw Safety Switches, or Westinghouse Electric Corp.'s XF/XU; having:

1. Fuses, or unfused as indicated on drawings.
2. Fused switches equipped with fuseholders to accept only the fuses specified in Section 262813 (UL Class RK-1, RK-5, L).
3. NEMA 1 enclosure unless otherwise indicated on drawing.
4. Minimum 240 V rating for 120 V, 208 V, or 240 V, circuits.
5. Minimum 600 V rating for 277 V, or 480 V circuits.
6. Solid neutral bus when neutral conductor is included with circuit and not indicated to be switched.
7. Ground bus when equipment grounding conductor is included with circuit.
8. Current rating and number of poles as indicated on drawings.

2.6 TRANSFER SWITCH ACCESSORIES

A. Bypass/Isolation Switches:

1. Source Limitations: Same manufacturer as transfer switch in which installed.
2. Comply with requirements for Level 1 equipment according to NFPA 110.
3. Description: Manual type, arranged to select and connect either source of power directly to load, isolating transfer switch from load and from both power sources. Include the following features for each combined automatic transfer switch and bypass/isolation switch:

a. Means to lock bypass/isolation switch in the position that isolates transfer switch with an arrangement that permits complete electrical testing of transfer switch while isolated. Interlocks shall prevent transfer-switch operation, except for testing or maintenance, while automatic transfer switch is isolated.
b. Provide means to make power available to transfer-switch control circuit for testing and maintenance purposes.
c. Drawout Arrangement for Transfer Switch: Provide physical separation from live parts and accessibility for testing and maintenance operations. Transfer switch and bypass/isolation switch shall be in isolated compartments.
d. Transition:

1) Provide closed-transition operation when transferring from main transfer switch to bypass/isolation switch on the same power source.
2) Provide [**open**] [**closed**]-transition operation when transferring between power sources.

e. Bypass/Isolation Switch Current, Voltage, Closing, and Short-Circuit Withstand Ratings: Equal to or greater than those of associated automatic transfer switch, and with same phase arrangement and number of poles.
f. Contact temperatures of bypass/isolation switches shall not exceed those of automatic transfer-switch contacts when they are carrying rated load.
g. Manual Control: Constructed so load bypass and transfer-switch isolation can be performed by one person in no more than two operations in 15 seconds or less. Operating handles shall be externally operated.
h. Automatic and Nonautomatic Control: Automatic transfer-switch controller shall also control the bypass/isolation switch.
i. Legend: Manufacturer's standard legend for control labels and instruction signs shall describe operating instructions.
j. Maintainability: Fabricate to allow convenient removal of major components from front without removing other parts or main power conductors.

4. Interconnection of Bypass/Isolation Switches with Automatic Transfer Switches: Factory-installed copper bus bars; plated at connection points and braced for the indicated available short-circuit current.

B. Remote Annunciator System:

1. Source Limitations: Same manufacturer as transfer switch in which installed.
2. Functional Description: Remote annunciator panel shall annunciate conditions for indicated transfer switches.
3. Annunciation panel display shall include the following indicators:

a. Sources available, as defined by actual pickup and dropout settings of transfer-switch controls.
b. Switch position.
c. Switch in test mode.
d. Failure of communication link.

4. Annunciator Panel: LED-lamp type with audible signal and silencing switch.

a. Indicating Lights: Grouped for each transfer switch monitored.
b. Label each group, indicating transfer switch it monitors, location of switch, and identity of load it serves.
c. Mounting: Flush, modular, steel cabinet unless otherwise indicated.
d. Lamp Test: Push-to-test or lamp-test switch on front panel.

C. Remote Annunciator and Control System:

1. Source Limitations: Same manufacturer as transfer switch in which installed.
2. Include the following functions for indicated transfer switches:

a. Indication of sources available, as defined by actual pickup and dropout settings of transfer-switch controls.
b. Indication of switch position.

c. Indication of switch in test mode.
d. Indication of failure of digital communication link.
e. Key-switch or user-code access to control functions of panel.
f. Control of switch-test initiation.
g. Control of switch operation in either direction.
h. Control of time-delay bypass for transfer to normal source.

3. Malfunction of annunciator, annunciation and control panel, or communication link shall not affect functions of automatic transfer switch. In the event of failure of communication link, automatic transfer switch automatically shall revert to standalone, self-contained operation. Automatic transfer-switch sensing, controlling, or operating function shall not depend on remote panel for proper operation.
4. Remote Annunciation and Control Panel: Solid-state components. Include the following features:

a. Controls and indicating lights grouped together for each transfer switch.
b. Label each indicating light control group. Indicate transfer switch it controls, location of switch, and load it serves.
c. Digital Communication Capability: Matched to that of transfer switches supervised.
d. Mounting: Flush, modular, steel cabinet unless otherwise indicated.

2.7 SOURCE QUALITY CONTROL

A. Factory Tests: Test and inspect components, assembled switches, and associated equipment according to UL 1008. Ensure proper operation. Check transfer time and voltage, frequency, and time-delay settings for compliance with specified requirements. Perform dielectric strength test complying with NEMA ICS 1.

B. Prepare test and inspection reports.

1. For each of the tests required by UL 1008, performed on representative devices, for [**emergency**] [**legally required**] systems. Include results of test for the following conditions:

a. Overvoltage.
b. Undervoltage.
c. Loss of supply voltage.
d. Reduction of supply voltage.
e. Alternative supply voltage or frequency is at minimum acceptable values.
f. Temperature rise.
g. Dielectric voltage-withstand; before and after short-circuit test.
h. Overload.
i. Contact opening.
j. Endurance.
k. Short circuit.
l. Short-time current capability.
m. Receptacle withstand capability.
n. Insulating base and supports damage.

PART 3 - EXECUTION

3.1 INSTALLATION

A. Floor-Mounting Switch: Anchor to floor by bolting.

1. Install transfer switches on cast-in-place concrete equipment base(s). Comply with requirements for equipment bases and foundations specified in Section 033000 "Cast-in-Place Concrete."
2. Comply with requirements for seismic control devices specified in Section 260548.16 "Seismic Controls for Electrical Systems."

3. Coordinate size and location of concrete bases. Cast anchor-bolt inserts into bases.
4. Provide workspace and clearances required by NFPA 70.

B. Annunciator and Control Panel Mounting: Flush in wall unless otherwise indicated.

C. Identify components according to Section 260553 "Identification for Electrical Systems."

D. Set field-adjustable intervals and delays, relays, and engine exerciser clock.

E. Comply with NECA 1.

3.2 CONNECTIONS

A. Wiring to Remote Components: Match type and number of cables and conductors to generator sets, [**motor controls,**]control, and communication requirements of transfer switches as recommended by manufacturer. Increase raceway sizes at no additional cost to Director's Representative if necessary to accommodate required wiring.

B. Wiring Method: Install cables in raceways and cable trays except within electrical enclosures. Conceal raceway and cables except in unfinished spaces.

1. Comply with requirements for raceways and boxes specified in Section 260533 "Raceways and Boxes for Electrical Systems."

C. Wiring within Enclosures: Bundle, lace, and train conductors to terminal points with no excess and without exceeding manufacturer's limitations on bending radii.

D. Ground equipment according to Section 260526 "Grounding and Bonding for Electrical Systems."

E. Connect wiring according to Section 260519 "Low-Voltage Electrical Power Conductors and Cables."

F. Connect twisted pair cable according to Section 260523 "Control-Voltage Electrical Power Cables."

G. Route and brace conductors according to manufacturer's written instructions[**.**][**and Section 260529 "Hangers and Supports for Electrical Systems."**] Do not obscure manufacturer's markings and labels.

H. Brace and support equipment according to Section 260548.16 "Seismic Controls for Electrical Systems."

I. Final connections to equipment shall be made with liquidtight, flexible metallic conduit no more than 18 inches in length.

3.3 FIELD QUALITY CONTROL

A. Administrant for Tests and Inspections:

1. Director's Representative will engage qualified testing agency to administer and perform tests and inspections.
2. Engage qualified testing agency to administer and perform tests and inspections.
3. Engage Company Service Advisor to administer and perform tests and inspections on components, assemblies, and equipment installations, including connections.
4. Administer and perform tests and inspections[**with assistance of Company Service Advisor**].

B. Tests and Inspections:

1. After installing equipment, test for compliance with requirements according to NETA ATS.
2. Visual and Mechanical Inspection:

a. Compare equipment nameplate data with Drawings and Specifications.
b. Inspect physical and mechanical condition.
c. Inspect anchorage, alignment, grounding, and required clearances.
d. Verify that the unit is clean.
e. Verify appropriate lubrication on moving current-carrying parts and on moving and sliding surfaces.
f. Verify that manual transfer warnings are attached and visible.
g. Verify tightness of all control connections.
h. Inspect bolted electrical connections for high resistance using one of the following methods, or both:

1) Use of low-resistance ohmmeter.
2) Verify tightness of accessible bolted electrical connections by calibrated torque-wrench method according to manufacturer's published data.

i. Perform manual transfer operation.
j. Verify positive mechanical interlocking between normal and alternate sources.
k. Perform visual and mechanical inspection of surge arresters.
l. Inspect control power transformers.

1) Inspect for physical damage, cracked insulation, broken leads, tightness of connections, defective wiring, and overall general condition.
2) Verify that primary and secondary fuse or circuit-breaker ratings match Drawings.
3) Verify correct functioning of drawout disconnecting contacts, grounding contacts, and interlocks.

3. Electrical Tests:

a. Perform insulation-resistance tests on all control wiring with respect to ground.
b. Perform a contact/pole-resistance test. Compare measured values with manufacturer's acceptable values.
c. Verify settings and operation of control devices.
d. Calibrate and set all relays and timers.
e. Verify phase rotation, phasing, and synchronized operation.
f. Perform automatic transfer tests.
g. Verify correct operation and timing of the following functions:

1) Normal source voltage-sensing and frequency-sensing relays.
2) Engine start sequence.
3) Time delay on transfer.
4) Alternative source voltage-sensing and frequency-sensing relays.
5) Automatic transfer operation.
6) Interlocks and limit switch function.
7) Time delay and retransfer on normal power restoration.
8) Engine cool-down and shutdown feature.

4. Measure insulation resistance phase-to-phase and phase-to-ground with insulation-resistance tester. Include external annunciation and control circuits. Use test voltages and procedure recommended by manufacturer. Comply with manufacturer's specified minimum resistance.

a. Check for electrical continuity of circuits and for short circuits.
b. Inspect for physical damage, proper installation and connection, and integrity of barriers, covers, and safety features.
c. Verify that manual transfer warnings are properly placed.
d. Perform manual transfer operation.

5. After energizing circuits, perform each electrical test for transfer switches stated in NETA ATS and demonstrate interlocking sequence and operational function for each switch at least three times.

a. Simulate power failures of normal source to automatic transfer switches and retransfer from emergency source with normal source available.

b. Simulate loss of phase-to-ground voltage for each phase of normal source.
c. Verify time-delay settings.
d. Verify pickup and dropout voltages by data readout or inspection of control settings.
e. Test bypass/isolation unit functional modes and related automatic transfer-switch operations.
f. Perform contact-resistance test across main contacts and correct values exceeding 500 microhms and values for one pole deviating by more than 50 percent from other poles.
g. Verify proper sequence and correct timing of automatic engine starting, transfer time delay, retransfer time delay on restoration of normal power, and engine cool-down and shutdown.

6. Ground-Fault Tests: Coordinate with testing of ground-fault protective devices for power delivery from both sources.

a. Verify grounding connections and locations and ratings of sensors.

C. Coordinate tests with tests of generator and run them concurrently.

D. Report results of tests and inspections in writing. Record adjustable relay settings and measured insulation and contact resistances and time delays. Attach a label or tag to each tested component indicating satisfactory completion of tests.

E. Transfer switches will be considered defective if they do not pass tests and inspections.

F. Remove and replace malfunctioning units and retest as specified above.

G. Prepare test and inspection reports.

H. Infrared Scanning: After Substantial Completion, but not more than 60 days after Final Acceptance, perform an infrared scan of each switch. Remove all access panels so joints and connections are accessible to portable scanner.

1. Instrument: Use an infrared scanning device designed to measure temperature or to detect significant deviations from normal values. Provide calibration record for device.
2. Record of Infrared Scanning: Prepare a certified report that identifies switches checked and that describes scanning results. Include notation of deficiencies detected, remedial action taken, and observations after remedial action.
3. Follow-up Infrared Scanning: Perform an additional follow-up infrared scan of each switch 11 months after date of Substantial Completion.

3.4 DEMONSTRATION

A. [**Engage a Company Service Advisor to train**] [**Train**] Director’s Representative's maintenance personnel to adjust, operate, and maintain transfer switches and related equipment.

B. Training shall include testing ground-fault protective devices and instructions to determine when the ground-fault system shall be retested. Include instructions on where ground-fault sensors are located and how to avoid negating the ground-fault protection scheme during testing and circuit modifications.

C. Coordinate this training with that for generator equipment.

END OF SECTION 263600

SECTION 264113

LIGHTNING PROTECTION FOR STRUCTURES

PART 1 - GENERAL

1.1 RELATED DOCUMENTS

A. Drawings and general provisions of the Contract, including General and Supplementary Conditions and Division 01 Specification Sections, apply to this Section.

1.2 SUMMARY

A. Section includes lightning protection system for ordinary structures.

B. Section includes lightning protection system for the following:

1. Ordinary structures.

1.3 SUBMITTALS

A. Submittals for this section are subject to the re-evaluation fee identified in Article 4 of the General Conditions.

B. Manufacturer's installation instructions shall be provided along with product data.

C. Submittals shall be provided in the order in which they are specified and tabbed (for combined submittals).

D. Product Data: For each type of product.

E. Shop Drawings:

1. Include layouts of the lightning protection system, with details of the components to be used in the installation.
2. Include raceway locations needed for the installation of conductors.
3. Details of air terminals, ground rods, ground rings, conductor supports, splices, and terminations, including concealment requirements.
4. Include roof attachment details, coordinated with roof installation.
5. Calculations required by NFPA 780 for bonding of metal bodies.

F. Submittals for this section are subject to the re-evaluation fee identified in Article 4 of the General Conditions.

G. Coordination Drawings: Lightning protection system Shop Drawings, drawn to scale, on which the following items are shown and coordinated with each other, using input from installers of the items involved:

1. Lightning protection cabling attachments to roofing systems and accessories.
2. Lightning protection strike termination device attachment to roofing systems, coordinated with the roofing system manufacturer.
3. Lightning protection system components penetrating roofing and moisture protection systems and system components, coordinated with the roofing system manufacturer.

H. Qualification Data: For Installer.

I. Product Certificates: For each type of roof adhesive for attaching the roof-mounted air terminal assemblies, approved by the roofing-material manufacturer.

J. Field quality-control reports.

1.4 CLOSEOUT SUBMITTALS

A. Maintenance Data: For lightning protection system to include in maintenance manuals.

1. Include the following:

a. Dimensioned site plan showing dimensioned route of the ground loop conductor and the ground rod locations.
b. A system testing and inspection record, listing the results of inspections and ground resistance tests, as recommended by NFPA 780, Annex D.

B. Completion Certificate:

1. [**UL Master Label Certificate**] [**UL Letter of Findings Limited Scope Inspection Report**] [**LPI Master Certificate**] [**LPI Limited Scope Certification**].

1.5 QUALITY ASSURANCE

A. Installer Qualifications: [**UL-listed installer, category OWAY**] [**or**] [**LPI Master Installer**].

B. Equipment Qualifications For Products Other Than Those Specified:

1. At the time of submission provide written notice to the Owner of the intent to propose an “or equal” for products other than those specified. Make the “or equal” submission in a timely manner to allow the Owner sufficient time to review the proposed product, perform inspections and witness test demonstrations.
2. If products other than those specified are proposed for use furnish the name, address, and telephone numbers of at least 5 comparable installations that can prove the proposed products have performed satisfactorily for 3 years. Certify in writing that the Owner’s Representative of the 5 comparable installations will allow inspection of their installation by the Owner's Representative and the Company Field Advisor.

a. Make arrangements with the Owner’s Representative of 2 installations (selected by the Owner) for inspection of the installations by the Owner's Representative. Also obtain the services of the Company Field Advisor for the proposed products to be present. Notify the Owner a minimum of 3 weeks prior to the availability of the installations for the inspection, and provide at least one alternative date for each inspection.
b. Only references from the actual Owner or Owner’s Representative (Security Supervisor, Maintenance Supervisor, etc.) will be accepted. References from dealers, system installers or others, who are not the actual Owner’s Representative of the proposed products, are not acceptable.

1) Verify the accuracy of all references submitted prior to submission and certify in writing that the accuracy of the information has been confirmed.

3. The product manufacturer shall have test facilities available that can demonstrate that the proposed products meet the contract requirements.

a. Make arrangements with the test facility for the Owner's Representative to witness test demonstrations. Also obtain the services of the Company Field Advisor for the proposed product to be present at the test facility. Notify the Owner a minimum of 3 weeks prior to the availability of the test facility, and provide at least one alternative date for the testing.

4. Provide written certification from the manufacturer that the proposed products are compatible for use with all other equipment proposed for use for this system and meet all contract requirements.

C. Installers' Qualifications: The system shall be installed by a firm actively engaged in the installation of Underwriters Laboratories Inc. Master Labeled Lightning Protection Systems. The persons performing the Work of this section and their supervisor shall be personally experienced in lightning protection systems and shall have been regularly employed by a Company engaged in the installation of this type system for a minimum of 3 years.

1. Furnish to the Owner the names and addresses of 5 similar projects which they have worked on during the past 3 years.

D. Underwriters Laboratories Inspection:

1. Send completed Master Label Application Form to Chicago Office of Underwriters Laboratories Inc.
2. After completion of UL inspection and acceptance, install Master Label at appropriate location.

PART 2 - PRODUCTS

2.1 MANUFACTURERS

A. Manufacturers: Subject to compliance with requirements, available manufacturers offering products that may be incorporated into the Work include, but are not limited to the following:

1. Harger Lightning & Grounding.
2. Heary Bros. Lightning Protection Co. Inc.
3. Independent Protection Co.
4. Or equal.

2.2 PERFORMANCE REQUIREMENTS

A. NFPA Lightning Protection Standard: Comply with NFPA 780 requirements for [**Class I**] [**Class II**] buildings.

B. UL Lightning Protection Standard: Comply with UL 96A requirements for [**Class I**] [**Class II**] buildings.

C. Lightning Protection Components, Devices, and Accessories: Listed and labeled by a qualified testing agency as complying with UL 96, and marked for intended location and application.

2.3 MATERIALS

A. Air Terminals:

1. [**Copper**] [**Stainless steel**] [**or**] [**Aluminum**] unless otherwise indicated.
2. [**1/2-inch**] diameter by [**10 inches**] [**12 inches**] [**15 inches**] [**18 inches**] [**24 inches**] <**Insert length of air terminal**> long.
3. [**Pointed**] [**Rounded**] tip.
4. [**Integral base support**] [**Threaded base support**].

B. Air Terminal Bracing:

1. [**Aluminum**] [**Copper**] [**Stainless steel**] [**Galvanized steel**].
2. [**1/4-inch**] <**Insert size**> diameter rod.

C. Class 1 Main Conductors:

1. [**Stranded Copper: 57,400 circular mils in diameter**].
2. [**Aluminum: 98,600 circular mils in diameter**].

D. Class II Main Conductors:

1. [**Stranded Copper: 115,000 circular mils in diameter**].
2. [**Aluminum: 192,000 circular mils in diameter**].

E. Secondary Conductors:

1. [**Stranded Copper: 26,240 circular mils in diameter**].
2. [**Aluminum: 41,400 circular mils in diameter**].

F. Ground Loop Conductor: [**Stranded copper**] [**Tinned copper**].

G. Ground Rods:

1. Material: [**Solid copper**] [**Copper-clad steel**] [**Stainless steel**].
2. Diameter: [**3/4 inch**].
3. Rods shall be not less than 120 inches long.
4. [**Sectional type, with integral threads**].

H. Conductor Splices and Connectors: Compression fittings that are installed with hydraulically operated tools, or exothermic welds, approved for use with the class type.

I. Attachments: Fasteners shall be of suitable configuration for the intended application and of the same material as the conductor. Nails, screws, or bolts employed to secure the fasteners shall be of the same material as the fasteners or of material which is as resistant to corrosion as that of the fasteners. (Galvanized or plated steel nails, screws, or bolts are not acceptable).

J. Chimneys:

1. All materials for this installation shall be Class III, as defined by Underwriters Laboratories Inc. for use on heavy duty smoke stacks.
2. Copper shall be of the grade ordinarily required for commercial electrical Work, generally designated as being 98 percent conductivity when annealed.
3. Materials used within 25’-0” of the top of the stack shall have a continuous covering of lead at least 1/6 inch thick.
4. Air Terminals: Solid copper having a minimum diameter of 5/8 inch and length to extend above the top of the stack not less than 18 inches nor more than 30 inches.
5. Conductors:

   a. Copper, weighting not less than 6 ounces per linear foot (375 pounds per thousand feet).
   b. The size of any wire in the conductor not less than No. 15 AWG (.057 inch).
   c. The thickness of any web or ribbon not less than No. 12 AWG (.080 inch).

6. Attachments: All attachments (brackets, splicers, fasteners, connectors, clamps, clips) shall be made of bronze.
7. Joints: Joints shall be of such construction as to show by laboratory tests, a strength in tension of at least 50 percent of that of the conductor.
8. Ground Electrodes: Solid copper or copper-clad ground rods; 3/4 inch minimum diameter, 10’-0” long.

PART 3 - EXECUTION

3.1 INSTALLATION

A. Install lightning protection components and systems according to [**UL 96A**] [**NFPA 780**].

B. Install conductors with direct paths from air terminals to ground connections. Avoid bends less than 90 degrees and 8 inches in radius and narrow loops.

C. Conceal conductors within normal view from exterior locations at grade within 200 feet of building. Comply with requirements for [**concealed installations in UL 96A**] [**concealed systems in NFPA 780**].

1. Roof penetrations required for down conductors and connections to structural-steel framework shall be made using listed through-roof fitting and connector assemblies with solid rods and appropriate roof flashings. Use materials approved by the roofing manufacturer for the purpose. Conform to the methods and materials required at roofing penetrations of the lightning protection components to ensure compatibility with the roofing specifications and warranty.
2. Install conduit where necessary to comply with conductor concealment requirements.
3. Air Terminals on Single-Ply Membrane Roofing: Comply with adhesive manufacturer's written instructions.

D. Ground Ring Electrode: The conductor shall be not less than the main-size lightning conductor.

3.2 CONNECTIONS

A. Aboveground concealed connections, and connections in earth or concrete, shall be done by exothermic welds or by high-compression fittings listed for the purpose.

B. Aboveground exposed connections shall be done using the following types of connectors, listed and labeled for the purpose: [**bolted connectors**] [**exothermic weld**] [**high compression**] [**crimp**].

C. Bonding Straps and Jumpers: Install in locations accessible for inspection and maintenance, except where routed through short lengths of conduit.

1. Bonding to Structure: Bond straps directly to basic structure, taking care not to penetrate any adjacent parts.
2. Bonding to Equipment Mounted on Vibration Isolation Hangers and Supports: Install bonding so vibration is not transmitted to rigidly mounted equipment.

3.3 CORROSION PROTECTION

A. Do not combine materials that can form an electrolytic couple that will accelerate corrosion in the presence of moisture unless moisture is permanently excluded from junction of such materials.

B. Use conductors with protective coatings where conditions would cause deterioration or corrosion of conductors.

3.4 FIELD QUALITY CONTROL

A. Special Inspections: [Owner**'s Representative will engage**] [**Engage**] a qualified special inspector to perform the following special inspections:

1. Perform inspections as required to obtain a UL Master Label for system.
2. Perform inspections to obtain an LPI certification.

B. Prepare test and inspection reports and certificates.

END OF SECTION 264113

SECTION 264313

SURGE PROTECTION FOR LOW-VOLTAGE ELECTRICAL POWER CIRCUITS

PART 1 - GENERAL

1.1 RELATED DOCUMENTS

1.2 SUMMARY

A. Section includes:

1. Type 1 surge protective devices.
2. Type 2 surge protective devices.
3. Enclosures.
4. Conductors and cables.

B. Related Requirements:

1. Section 262413 "Switchboards" for integral SPDs installed by switchboard manufacturer.
2. Section 262416 "Panelboards" for integral SPDs installed by panelboard manufacturer.
3. Section 262726 "Wiring Devices" for integral SPDs installed by receptacle manufacturer.

1.3 DEFINITIONS

A. Inominal: Nominal discharge current.

B. MCOV: Maximum continuous operating voltage.

C. Mode(s), also Modes of Protection: air of electrical connections where the VPR applies.

D. MOV: Metal-oxide varistor; an electronic component with a significant non-ohmic current-voltage characteristic.

E. NRTL: Nationally recognized testing laboratory.

F. OCPD: Overcurrent protective device.

G. SCCR: Short-circuit current rating.

H. SPD: Surge protective device.

I. Type 1 SPDs: Permanently connected SPDs intended for installation between the secondary of the service transformer and the line side of the service disconnect overcurrent device.

J. Type 2 SPDs: Permanently connected SPDs intended for installation on the load side of the service disconnect overcurrent device, including SPDs located at the branch panel.

K. Type 3 SPDs: Point of utilization SPDs.

L. Type 4 SPDs: Component SPDs, including discrete components, as well as assemblies.

M. Type 5 SPDs: Discrete component surge suppressors, such as MOVs that may be mounted on a printed wiring board, connected by its leads or provided within an enclosure with mounting means and wiring terminations.

N. VPR: Voltage protection rating.

1.4 SUBMITTALS

A. Submittals for this section are subject to the re-evaluation fee identified in Article 4 of the General Conditions.

B. Manufacturer’s installation instructions shall be provided along with product data.

C. Submittals shall be provided in the order in which they are specified and tabbed (for combined submittals).

D. Product Data: For each type of product.

1. Include electrical characteristics, specialties, and accessories for SPDs.
2. NRTL certification of compliance with UL 1449.

a. Tested values for VPRs.
b. Inominal ratings.
c. MCOV, type designations.
d. OCPD requirements.
e. Manufacturer's model number.
f. System voltage.
g. Modes of protection.

E. Submittals for this section are subject to the re-evaluation fee identified in Article 4 of the General Conditions.

F. Field quality-control reports.

G. Sample Warranty: For manufacturer's special warranty.

1.5 CLOSEOUT SUBMITTALS

A. Maintenance Data: For SPDs to include in maintenance manuals.

1.6 WARRANTY

A. Manufacturer's Warranty: Manufacturer agrees to repair or replace SPDs that fail in materials or workmanship within [**10]** years from date of Substantial Completion.

1.7 Quality Control Submittals:

A. List of Completed Installations: If brand names other than those specified are proposed for use, furnish the name, address, and telephone number of at least 5 comparable installations that can prove the proposed products have operated satisfactorily for one year.

B. Company Field Advisor Data: Include:

1. Name, business address and telephone number of Company Field Advisor secured for the required services.
2. Certified statement from the Company listing the qualifications of the Company Field Advisor.
3. Services and each product for which authorization is given by the Company listed specifically for this project.

PART 2 - PRODUCTS

2.1 TYPE 1 SURGE PROTECTIVE DEVICES (SPDs)

A. Manufacturers: Subject to compliance with requirements, available manufacturers offering products that may be incorporated into the Work include, but are not limited to the following:

1. Eaton.
2. Schneider Electric USA, Inc.
3. Siemens Industry, Inc., Energy Management Division.
4. Or equal.

B. Source Limitations: Obtain devices from single source from single manufacturer.

C. Standards:

1. Listed and labeled by an NRTL acceptable to authorities having jurisdiction as complying with UL 1449, Type 1.

D. Product Options:

1. Include integral disconnect switch.
2. Include internal thermal protection that disconnects the SPD before damaging internal suppressor components.
3. Include indicator light display for protection status.
4. Include audible alarm.
5. Include NEMA ICS 5, dry Form C contacts rated at [**2 A and 24 V ac**] for remote monitoring of protection status.
6. Include surge counter.

E. Performance Criteria:

1. MCOV: Not less than 125 percent of nominal system voltage for 208Y/120 V and 120/240 V power systems, and not less than 115 percent of nominal system voltage for 480Y/277 V power systems.
2. Peak Surge Current Rating: Minimum single-pulse surge current withstand rating per phase must not be less than [**200**] kA. Peak surge current rating must be arithmetic sum of the ratings of individual MOVs in a given mode.
3. Protection modes and UL 1449 VPR for grounded wye circuits with [**208Y/120 V**], three-phase, four-wire circuits must not exceed the following:

   a. Line to Neutral: [**700 V for 208Y/120 V**].
   b. Line to Line: [**1200 V for 208Y/120 V**].

4. Protection modes and UL 1449 VPR for 240/120 V, single-phase, three-wire circuits must not exceed the following:

   a. Line to Neutral: 700 V.
   b. Line to Line: 1200 V.

5. SCCR: Not less than [**200**] kA.
6. Inominal Rating: 20 kA.

2.2 TYPE 2 SURGE PROTECTIVE DEVICES (SPDs)

A. Manufacturers: Subject to compliance with requirements, available manufacturers offering products that may be incorporated into the Work include, but are not limited to the following:

1. Eaton.
2. Schneider Electric USA, Inc.
3. Siemens Industry, Inc., Energy Management Division.
4. Or equal.

B. Source Limitations: Obtain devices from single source from single manufacturer.

C. Standards:

1. Listed and labeled by an NRTL acceptable to authorities having jurisdiction as complying with UL 1449, Type 2.
2. Comply with UL 1283.

D. Product Options:

1. Include LED indicator lights for power and protection status.
2. Include internal thermal protection that disconnects the SPD before damaging internal suppressor components.
3. Include NEMA ICS 5, dry Form C contacts rated at [**2 A and 24 V ac**] for remote monitoring of protection status.
4. Include surge counter.

E. Performance Criteria:

1. MCOV: Not less than 125 percent of nominal system voltage for 208Y/120 V and 120/240 V power systems, and not less than 115 percent of nominal system voltage for 480Y/277 V power systems.
2. Peak Surge Current Rating: Minimum single-pulse surge current withstand rating per phase must not be less than [**150**] kA. Peak surge current rating must be arithmetic sum of the ratings of individual MOVs in a given mode.
3. Protection modes and UL 1449 VPR for grounded wye circuits with [**208Y/120 V**], three-phase, four-wire circuits must not exceed the following:

   a. Line to Neutral: [**700 V for 208Y/120 V**].
   b. Line to Ground: [**700 V for 208Y/120 V**].
   c. Neutral to Ground: [**700 V for 208Y/120 V**].
   d. Line to Line: [**1200 V for 208Y/120 V**].

4. Protection modes and UL 1449 VPR for 240/120 V, single-phase, three-wire circuits must not exceed the following:

   a. Line to Neutral: 700 V.
   b. Line to Ground: 700 V.
   c. Neutral to Ground: 700 V.
   d. Line to Line: 1200 V.

5. SCCR: Equal or exceed [**200**] kA.
6. Inominal Rating: [**20**] kA.

2.3 TYPE 3, TYPE 4, AND TYPE 5 SURGE PROTECTIVE DEVICES (SPDs)

A. Type 3, Type 4, and Type 5 SPDs are not approved for field installation.[**See "Related Requirements" Paragraph in "Summary" Article for products with manufacturer-installed Type 3, Type 4, and Type 5 SPDs.**]

2.4 ENCLOSURES

A. Indoor Enclosures: NEMA 250, Type 1.

B. Outdoor Enclosures: NEMA 250, [**Type 3R**] [**Type 4X**].

2.5 CONDUCTORS AND CABLES

A. Power Wiring: Same size as SPD leads, complying with Section 260519 "Low-Voltage Electrical Power Conductors and Cables."

PART 3 - EXECUTION

3.1 INSTALLATION

A. Comply with NECA 1.

B. Provide OCPD and disconnect for installation of SPD in accordance with UL 1449 and manufacturer's written instructions.

C. Install leads between disconnects and SPDs short, straight, twisted, and in accordance with manufacturer's written instructions. Comply with wiring methods in Section 260519 "Low-Voltage Electrical Power Conductors and Cables."

1. Do not splice and extend SPD leads unless specifically permitted by manufacturer.
2. Do not exceed manufacturer's recommended lead length.
3. Do not bond neutral and ground.

D. Use crimped connectors and splices only. Wire nuts are unacceptable.

3.2 FIELD QUALITY CONTROL

A. Perform the following tests and inspections with the assistance of a Company Service Advisor:

1. Compare equipment nameplate data for compliance with Drawings and the Specifications.
2. Inspect anchorage, alignment, grounding, and clearances.
3. Verify that electrical wiring installation complies with manufacturer's written installation requirements.

B. SPDs that do not pass tests and inspections will be considered defective.

C. Prepare test and inspection reports.

3.3 STARTUP SERVICE

A. Complete startup checks in accordance with manufacturer's written instructions.

B. Do not perform insulation-resistance tests of the distribution wiring equipment with SPDs installed. Disconnect SPDs before conducting insulation-resistance tests; reconnect them immediately after the testing is over.

C. Energize SPDs after power system has been energized, stabilized, and tested.

3.4 DEMONSTRATION

A. [**Engage a Company Service Advisor to train**] [**Train**] Owner’s Representative's maintenance personnel to operate and maintain SPDs.

END OF SECTION 264313

SECTION 265119

LED INTERIOR LIGHTING

PART 1 - GENERAL

1.1 RELATED DOCUMENTS

A. Drawings and general provisions of the Contract, including General and Supplementary Conditions and Division 01 Specification Sections, apply to this Section.

1.2 SUMMARY

A. Section Includes:

1. Cylinder.
2. Downlight.
3. Highbay, linear.
4. Linear industrial.
5. Lowbay.
6. Recessed, linear.
7. Strip light.
8. Surface mount, linear.
9. Surface mount, nonlinear.
10. Suspended, linear.
11. Suspended, nonlinear.
12. Materials.
13. Luminaire support.

1.3 DEFINITIONS

A. CCT: Correlated color temperature.

B. CRI: Color Rendering Index.

C. Fixture: See "Luminaire."

D. IP: International Protection or Ingress Protection Rating.

E. LED: Light-emitting diode.

F. Lumen: Measured output of lamp and luminaire, or both.

G. Luminaire: Complete lighting unit, including lamp, reflector, and housing.

1.4 SUBMITTALS

A. Submittals for this section are subject to the re-evaluation fee identified in Article 4 of the General Conditions.

B. Manufacturer’s installation instructions shall be provided along with product data.

C. Submittals shall be provided in the order in which they are specified and tabbed (for combined submittals).

D. Product Data: For each type of product.

1. Arrange in order of luminaire designation.
2. Include data on features, accessories, and finishes.
3. Include physical description and dimensions of luminaires.
4. Include emergency lighting units, including batteries and chargers.
5. Include life, output (lumens, CCT, and CRI), and energy-efficiency data.
6. Photometric data and adjustment factors based on laboratory tests[**, complying with IES "Lighting Measurements Testing and Calculation Guides" for each luminaire type. The adjustment factors shall be for lamps and accessories identical to those indicated for the luminaire as applied in this Project**] [**IES LM-79**] [**and**] [**IES LM-80**].

   a. Manufacturers' Certified Data: Photometric data certified by manufacturer's laboratory with a current accreditation under the National Voluntary Laboratory Accreditation Program for Energy Efficient Lighting Products.
   b. Testing Agency Certified Data: For indicated luminaires, photometric data certified by a qualified independent testing agency. Photometric data for remaining luminaires shall be certified by manufacturer.

E. Shop Drawings: For nonstandard or custom luminaires.

1. Include plans, elevations, sections, and mounting and attachment details.
2. Include details of luminaire assemblies. Indicate dimensions, weights, loads, required clearances, method of field assembly, components, and location and size of each field connection.
3. Include diagrams for power, signal, and control wiring.

F. Samples: For each luminaire and for each color and texture with standard factory-applied finish.

G. Samples for Initial Selection: For each type of luminaire with custom factory-applied finishes.

1. Include Samples of luminaires and accessories involving color and finish selection.

H. Samples for Verification: For each type of luminaire.

1. Include Samples of luminaires and accessories to verify finish selection.

I. Product Schedule: For luminaires and lamps.[**Use same designations indicated on Drawings.**]

J. Submittals for this section are subject to the re-evaluation fee identified in Article 4 of the General Conditions.

K. Coordination Drawings: Reflected ceiling plan(s) and other details, drawn to scale, on which the following items are shown and coordinated with each other, using input from installers of the items involved:

1. Luminaires.
2. Suspended ceiling components.
3. Partitions and millwork that penetrate the ceiling or extend to within 12 inches of the plane of the luminaires.
4. Structural members to which [**equipment**] [**and**] [**or**] luminaires will be attached.
5. Initial access modules for acoustical tile, including size and locations.
6. Items penetrating finished ceiling, including the following:

   a. Other luminaires.
   b. Air outlets and inlets.
   c. Speakers.
   d. Access panels.
   e. Ceiling-mounted projectors.

7. Moldings.

L. Qualification Data: For testing laboratory providing photometric data for luminaires.

M. Seismic Qualification Data: For luminaires, accessories, and components, from manufacturer.

1. Basis for Certification: Indicate whether withstand certification is based on actual test of assembled components or on calculation.
2. Dimensioned Outline Drawings of Equipment Unit: Identify center of gravity and locate and describe mounting and anchorage provisions.
3. Detailed description of equipment anchorage devices on which the certification is based and their installation requirements.

N. Product Certificates: For each type of luminaire.

O. Product Test Reports: For each type of luminaire, for tests performed by [**manufacturer and witnessed by a qualified testing agency**] [**a qualified testing agency**].

P. Sample warranty.

1.5 CLOSEOUT SUBMITTALS

A. Operation and Maintenance Data: For luminaires and lighting systems to include in operation and maintenance manuals.

1. Provide a list of all lamp types used on Project; use ANSI and manufacturers' codes.

1.6 MAINTENANCE MATERIAL SUBMITTALS

A. Furnish extra materials that match products installed and that are packaged with protective covering for storage and identified with labels describing contents.

1. Lamps: [**Ten for every 100**] of each type and rating installed. Furnish at least one of each type.
2. Diffusers and Lenses: [**One for every 100**] of each type and rating installed. Furnish at least one of each type.
3. Globes and Guards: [**One for every 20**] of each type and rating installed. Furnish at least one of each type.

1.7 QUALITY ASSURANCE

A. Luminaire Photometric Data Testing Laboratory Qualifications:

1. Luminaire manufacturer's laboratory that is accredited under the NVLAP for Energy Efficient Lighting Products.
2. Provided by an independent agency, with the experience and capability to conduct the testing indicated, that is an NRTL as defined by OSHA in 29 CFR 1910.7, accredited under the NVLAP for Energy Efficient Lighting Products, and complying with the applicable IES testing standards.

B. Provide luminaires from a single manufacturer for each luminaire type.

C. Each luminaire type shall be binned within a three-step MacAdam Ellipse to ensure color consistency among luminaires.

D. Mockups: For interior luminaires in room or module mockups, complete with power and control connections.

1. Obtain Architect's approval of luminaires in mockups before starting installations.
2. Maintain mockups during construction in an undisturbed condition as a standard for judging the completed Work.
3. Approval of mockups does not constitute approval of deviations from the Contract Documents contained in mockups unless Architect specifically approves such deviations in writing.
4. Subject to compliance with requirements, approved mockups may become part of the completed Work if undisturbed at time of Substantial Completion.

1.8 DELIVERY, STORAGE, AND HANDLING

A. Protect finishes of exposed surfaces by applying a strippable, temporary protective covering before shipping.

1.9 WARRANTY

A. Warranty: Manufacturer and Installer agree to repair or replace components of luminaires that fail in materials or workmanship within specified warranty period.

B. Warranty Period: [**Five**] year(s) from date of Substantial Completion.

PART 2 - PRODUCTS

2.1 PERFORMANCE REQUIREMENTS

A. Seismic Performance:

1. Luminaires shall withstand the effects of earthquake motions determined in accordance with [**ASCE/SEI 7**] .
2. Luminaires and lamps shall be labeled vibration and shock resistant.
3. The term "withstand" means "the luminaire will remain in place without separation of any parts when subjected to the seismic forces specified[**and the luminaire will be fully operational during and after the seismic event**]."

B. Ambient Temperature: [**5 to 104 deg F**].

1. Relative Humidity: Zero to 95 percent.

C. Altitude: Sea level to [**1000 feet**] .

2.2 LUMINAIRE REQUIREMENTS

A. Electrical Components, Devices, and Accessories: Listed and labeled as defined in NFPA 70, by a qualified testing agency, and marked for intended location and application.

B. Factory-Applied Labels: Comply with UL 1598. Include recommended lamps. Locate labels where they will be readily visible to service personnel, but not seen from normal viewing angles when lamps are in place.

1. Label shall include the following lamp characteristics:

a. "USE ONLY" and include specific lamp type.
b. Lamp diameter, shape, size, wattage, and coating.
c. CCT and CRI.

C. Recessed luminaires shall comply with NEMA LE 4.

D. NRTL Compliance: Luminaires for hazardous locations shall be listed and labeled for indicated class and division of hazard by an NRTL.

E. FM Global Compliance: Luminaires for hazardous locations shall be listed and labeled for indicated class and division of hazard by FM Global.

F. California Title 24 compliant.

2.3 CYLINDER

A. Manufacturers: Subject to compliance with requirements, available manufacturers offering products that may be incorporated into the Work include, but are not limited to the following:

1. Per fixture schedule
2. Or approved equal.

B. Nominal Operating Voltage: [**120 V ac**]

C. Lamp:

1. Minimum lm as indicated on plans.
2. Minimum allowable efficacy of [**80**] lm/W.
3. CRI of [**minimum**] [**80**] CCT of [**3000 K**] [**3500 K**]
4. Rated lamp life of [**35,000**] [**50,000**] hours to L70.
5. Dimmable from 100 percent to zero percent of maximum light output.
6. Internal driver.
7. User-Replaceable Lamps:

   a. Bulb shape complying with ANSI C78.79.
   b. Lamp base complying with [**ANSI C81.61**] [**or**] [**IEC 60061-1**].

8. Lens Thickness: At least 0.125-inch minimum unless otherwise indicated.

D. Housings:

1. [**Extruded-aluminum**] housing and heat sink.
2. [**Clear**] [**anodized**] [**powder-coat**] [**painted**] finish.

E. Doors, Frames, and Other Internal Access: Smooth operating, free of light leakage under operating conditions, and designed to permit relamping without use of tools. Components are designed to prevent doors, frames, lenses, diffusers, and other components from falling accidentally during relamping and when secured in operating position.

F. Diffusers and Globes:

1. [**Tempered Fresnel glass**] [**Prismatic glass**] [**Diffuse glass**] [**Clear glass**] [**Prismatic acrylic**] [**Clear, UV-stabilized acrylic**] .
2. Acrylic Diffusers: One hundred percent virgin acrylic plastic, with high resistance to yellowing and other changes due to aging, exposure to heat, and UV radiation.
3. Glass: Annealed crystal glass unless otherwise indicated.
4. Lens Thickness: At least 0.125-inch minimum unless otherwise indicated.

G. With integral mounting provisions.

H. Standards:

1. ENERGY STAR certified.
2. RoHS compliant.
3. UL Listing: Listed for damp location.

2.4 DOWNLIGHT.

A. Manufacturers: Subject to compliance with requirements, available manufacturers offering products that may be incorporated into the Work include, but are not limited to the following:

1. As per fixture schedule.
2. Or approved equal.

B. Nominal Operating Voltage: [**120 V ac**]

C. Lamp:

1. Minimum lm as indicated on plans.
2. Minimum allowable efficacy of [**80**] lm/W.
3. CRI of [**minimum**] [**80**] CCT of [**3000 K**] [**3500 K**]
4. Rated lamp life of [**35,000**] [**50,000**] hours to L70.
5. Dimmable from 100 percent to zero percent of maximum light output.
6. Internal driver.
7. User-Replaceable Lamps:

   a. Bulb shape complying with ANSI C78.79.
   b. Lamp base complying with [**ANSI C81.61**] [**or**] [**IEC 60061-1**].

8. Lens Thickness: At least 0.125-inch minimum unless otherwise indicated.

D. Housings:

1. [**Extruded-aluminum**] housing and heat sink.
2. [**Clear**] [**anodized**] [**powder-coat**] [**painted**] finish.
3. Universal mounting bracket.
4. Integral junction box with conduit fittings.

E. Doors, Frames, and Other Internal Access: Smooth operating, free of light leakage under operating conditions, and designed to permit relamping without use of tools. Designed to prevent doors, frames, lenses, diffusers, and other components from falling accidentally during relamping and when secured in operating position.

F. Diffusers and Globes:

1. [**Fixed**] [**Adjustable**] lens.
2. [**Spot**] [**Medium**] [**Wide**] light distribution.
3. [**Tempered Fresnel glass**] [**Prismatic glass**] [**Diffuse glass**] [**Clear glass**] [**Prismatic acrylic**] [**Clear, UV-stabilized acrylic**].
4. Acrylic Diffusers: One hundred percent virgin acrylic plastic, with high resistance to yellowing and other changes due to aging, exposure to heat, and UV radiation.
5. Glass: Annealed crystal glass unless otherwise indicated.
6. Lens Thickness: At least 0.125-inch minimum unless otherwise indicated.

G. Standards:

1. ENERGY STAR certified.
2. RoHS compliant.
3. UL Listing: Listed for damp location.

4. Recessed luminaires shall comply with NEMA LE 4.

2.5 HIGHBAY, LINEAR

A. Manufacturers: Subject to compliance with requirements, available manufacturers offering products that may be incorporated into the Work include, but are not limited to the following:
1. As per fixture schedule.
2. Or approved equal.

B. Nominal Operating Voltage: [**120 V ac**]

C. Lamp:

1. Minimum lm as indicated on plans.
2. Minimum allowable efficacy of [**80**] lm/W.
3. CRI of [**minimum**] [**80**] CCT of [**3000 K**] [**3500 K**]
4. Rated lamp life of [**35,000**] [**50,000**] hours to L70.
5. Dimmable from 100 percent to zero percent of maximum light output.
6. Internal driver.
7. User-Replaceable Lamps:

a. Bulb shape complying with ANSI C78.79.
b. Lamp base complying with [**ANSI C81.61**] [**or**] [**IEC 60061-1**].

8. Lens Thickness: At least 0.125-inch minimum unless otherwise indicated.

D. Housings:

1. [**Extruded-aluminum**] housing and heat sink.
2. [**Clear**] [**anodized**] [**powder-coat**] [**painted**] finish.
3. With integral mounting provisions.

E. Doors, Frames, and Other Internal Access: Smooth operating, free of light leakage under operating conditions, and designed to permit relamping without use of tools. Components are designed to prevent doors, frames, lenses, diffusers, and other components from falling accidentally during relamping and when secured in operating position.

F. Diffusers and Globes:

1. [**Tempered Fresnel glass**] [**Prismatic glass**] [**Diffuse glass**] [**Clear glass**] [**Prismatic acrylic**] [**Clear, UV-stabilized acrylic**]
2. Acrylic Diffusers: One hundred percent virgin acrylic plastic, with high resistance to yellowing and other changes due to aging, exposure to heat, and UV radiation.
3. Glass: Annealed crystal glass unless otherwise indicated.
4. Lens Thickness: At least 0.125-inch minimum unless otherwise indicated.

G. Standards:

1. ENERGY STAR certified.
2. RoHS compliant.
3. UL Listing: Listed for damp location.

2.6 LINEAR INDUSTRIAL .

A. Manufacturers: Subject to compliance with requirements, available manufacturers offering products that may be incorporated into the Work include, but are not limited to the following:

1. As per fixure schedule.Cooper Lighting Solutions; Signify North America Corp.
2. As per fixture schedule.
3. Or approved equal.

B. Nominal Operating Voltage: [**120 V ac**]

C. Lamp:

1. Minimum lm as indicated on plans.
2. Minimum allowable efficacy of [**80**] lm/W.
3. CRI of [**minimum**] [**80**] CCT of [**3000 K**] [**3500 K**]
4. Rated lamp life of [**35,000**] [**50,000**] hours to L70.
5. Dimmable from 100 percent to zero percent of maximum light output.
6. Internal driver.
7. User-Replaceable Lamps:

   a. Bulb shape complying with ANSI C78.79.
   b. Lamp base complying with [**ANSI C81.61**] [**or**] [**IEC 60061-1**].

8. Lens Thickness: At least 0.125-inch minimum unless otherwise indicated.

D. Housings:

1. [**Extruded-aluminum**] housing and heat sink.
2. [**Clear**] [**anodized**] [**powder-coat**] [**painted**] finish.

E. Housing and Heat Sink Rating:

1. Class 1, Division 2 Group(s) [**A**] [**B**] [**C**] [**and**] [**D**].
2. NEMA 4X.
3. IP 54.
4. IP 66.
5. Marine and wet locations.
6. CSA C22.2 No 137.

F. Doors, Frames, and Other Internal Access: Smooth operating, free of light leakage under operating conditions, and designed to permit relamping without use of tools. Components are designed to prevent doors, frames, lenses, diffusers, and other components from falling accidentally during relamping and when secured in operating position.

G. Diffusers and Globes:

1. [**Tempered Fresnel glass**] [**Prismatic glass**] [**Diffuse glass**] [**Clear glass**] [**Prismatic acrylic**] [**Clear, UV-stabilized acrylic**] .
2. Acrylic Diffusers: One hundred percent virgin acrylic plastic, with high resistance to yellowing and other changes due to aging, exposure to heat, and UV radiation.
3. Glass: Annealed crystal glass unless otherwise indicated.
4. Lens Thickness: At least 0.125-inch minimum unless otherwise indicated.

H. With integral mounting provisions.

I. Standards:

1. ENERGY STAR certified.
2. RoHS compliant.

2.7 LOWBAY

A. Manufacturers: Subject to compliance with requirements, available manufacturers offering products that may be incorporated into the Work include, but are not limited to the following:
1. As per fixture schedule.
2. Or approved equal.

B. Nominal Operating Voltage: [**120 V ac**]

C. Lamp:

1. Minimum lm as indicated on plans.
2. Minimum allowable efficacy of [**80**] lm/W.
3. CRI of [**minimum**] [**80**] CCT of [**3000 K**] [**3500 K**]
4. Rated lamp life of [**35,000**] [**50,000**] hours to L70.
5. Dimmable from 100 percent to zero percent of maximum light output.
6. Internal driver.
7. User-Replaceable Lamps:

a. Bulb shape complying with ANSI C78.79.
b. Lamp base complying with [**ANSI C81.61**] [**or**] [**IEC 60061-1**].

8. Lens Thickness: At least 0.125-inch minimum unless otherwise indicated.

D. Housings:

1. [**Extruded-aluminum**] housing and heat sink.
2. [**Clear**] [**anodized**] [**powder-coat**] [**painted**] finish.

E. Doors, Frames, and Other Internal Access: Smooth operating, free of light leakage under operating conditions, and designed to permit relamping without use of tools. Components are designed to prevent doors, frames, lenses, diffusers, and other components from falling accidentally during relamping and when secured in operating position.

F. Diffusers and Globes:

1. [**Tempered Fresnel glass**] [**Prismatic glass**] [**Diffuse glass**] [**Clear glass**] [**Prismatic acrylic**] [**Clear, UV-stabilized acrylic**].
2. Acrylic Diffusers: One hundred percent virgin acrylic plastic, with high resistance to yellowing and other changes due to aging, exposure to heat, and UV radiation.
3. Glass: Annealed crystal glass unless otherwise indicated.
4. Lens Thickness: At least 0.125-inch minimum unless otherwise indicated.

G. Standards:

1. ENERGY STAR certified.
2. RoHS compliant.
3. UL Listing: Listed for damp location.

2.8 RECESSED, LINEAR

A. Manufacturers: Subject to compliance with requirements, provide products by one of the following:
1. As per fixture schedule.
2. Or approved equal.

B. Nominal Operating Voltage: [**120 V ac**]

C. Lamp:

1. Minimum lm as indicated on plans.
2. Minimum allowable efficacy of [**80**] lm/W.
3. CRI of [**minimum**] [**80**] CCT of [**3000 K**] [**3500 K**]
4. Rated lamp life of [**35,000**] [**50,000**] hours to L70.
5. Dimmable from 100 percent to zero percent of maximum light output.
6. Internal driver.
7. User-Replaceable Lamps:

   a. Bulb shape complying with ANSI C78.79.
   b. Lamp base complying with [**ANSI C81.61**] [**or**] [**IEC 60061-1**].

8. Lens Thickness: At least 0.125-inch minimum unless otherwise indicated.

D. Housings:

1. [**Extruded-aluminum**] housing and heat sink.
2. [**Clear**] [**anodized**] [**powder-coat**] [**painted**] finish.
3. With integral mounting provisions.

E. Doors, Frames, and Other Internal Access: Smooth operating, free of light leakage under operating conditions, and designed to permit relamping without use of tools. Components are designed to prevent doors, frames, lenses, diffusers, and other components from falling accidentally during relamping and when secured in operating position.

F. Diffusers and Globes:

1. [**Tempered Fresnel glass**] [**Prismatic glass**] [**Diffuse glass**] [**Clear glass**] [**Prismatic acrylic**] [**Clear, UV-stabilized acrylic**] .
2. Acrylic Diffusers: One hundred percent virgin acrylic plastic, with high resistance to yellowing and other changes due to aging, exposure to heat, and UV radiation.
3. Glass: Annealed crystal glass unless otherwise indicated.
4. Lens Thickness: At least 0.125-inch minimum unless otherwise indicated.

G. Standards:

1. ENERGY STAR certified.
2. RoHS compliant.
3. UL Listing: Listed for damp location.
4. NEMA LE 4.

2.9 STRIP LIGHT

A. Manufacturers: Subject to compliance with requirements, available manufacturers offering products that may be incorporated into the Work include, but are not limited to the following:
1. As per fixture schedule.
2. Or approved equal.

B. Nominal Operating Voltage: [**120 V ac**]

C. Lamp:

1. Minimum lm as indicated on plans.
2. Minimum allowable efficacy of [**80**] lm/W.
3. CRI of [**minimum**] [**80**] CCT of [**3000 K**] [**3500 K**]
4. Rated lamp life of [**35,000**] [**50,000**] hours to L70.
5. Dimmable from 100 percent to zero percent of maximum light output.
6. Internal driver.
7. User-Replaceable Lamps:

a. Bulb shape complying with ANSI C78.79.
b. Lamp base complying with [**ANSI C81.61**] [**or**] [**IEC 60061-1**].

8. Lens Thickness: At least 0.125-inch minimum unless otherwise indicated.

D. Housings:

1. [**Extruded-aluminum**] housing and heat sink.
2. [**Clear**] [**anodized**] [**powder-coat**] [**painted**] finish.
3. With integral mounting provisions.

E. Doors, Frames, and Other Internal Access: Smooth operating, free of light leakage under operating conditions, and designed to permit relamping of luminaire without use of tools. Components are designed to prevent doors, frames, lenses, diffusers, and other components from falling accidentally during relamping and when secured in operating position.

F. Diffusers and Globes:

1. [**Tempered Fresnel glass**] [**Prismatic glass**] [**Diffuse glass**] [**Clear glass**] [**Prismatic acrylic**] [**Clear, UV-stabilized acrylic**]
2. Acrylic Diffusers: One hundred percent virgin acrylic plastic, with high resistance to yellowing and other changes due to aging, exposure to heat, and UV radiation.
3. Glass: Annealed crystal glass unless otherwise indicated.
4. Lens Thickness: At least 0.125-inch minimum unless otherwise indicated.

G. Standards:

1. ENERGY STAR certified.
2. RoHS compliant.
3. UL Listing: Listed for damp location.

2.10 SURFACE MOUNT, LINEAR

A. Manufacturers: Subject to compliance with requirements, available manufacturers offering products that may be incorporated into the Work include, but are not limited to the following:
1. As per fixture schedule.
2. Or approved equal.

B. Nominal Operating Voltage: [**120 V ac**]

C. Lamp:

1. Minimum lm as indicated on plans.
2. Minimum allowable efficacy of [**80**] lm/W.
3. CRI of [**minimum**] [**80**] CCT of [**3000 K**] [**3500 K**]
4. Rated lamp life of [**35,000**] [**50,000**] hours to L70.
5. Dimmable from 100 percent to zero percent of maximum light output.
6. Internal driver.
7. User-Replaceable Lamps:

a. Bulb shape complying with ANSI C78.79.
b. Lamp base complying with [**ANSI C81.61**] [**or**] [**IEC 60061-1**].

8. Lens Thickness: At least 0.125-inch minimum unless otherwise indicated.

D. Housings:

1. [**Extruded-aluminum**] housing and heat sink.
2. [**Clear**] [**anodized**] [**powder-coat**] [**painted**] finish.
3. With integral mounting provisions.

E. Doors, Frames, and Other Internal Access: Smooth operating, free of light leakage under operating conditions, and designed to permit relamping without use of tools. Components are designed to prevent doors, frames, lenses, diffusers, and other components from falling accidentally during relamping and when secured in operating position.

F. Diffusers and Globes:

1. [**Tempered Fresnel glass**] [**Prismatic glass**] [**Diffuse glass**] [**Clear glass**] [**Prismatic acrylic**] [**Clear, UV-stabilized acrylic**] .
2. Acrylic Diffusers: One hundred percent virgin acrylic plastic, with high resistance to yellowing and other changes due to aging, exposure to heat, and UV radiation.
3. Glass: Annealed crystal glass unless otherwise indicated.
4. Lens Thickness: At least 0.125-inch minimum unless otherwise indicated.

G. Standards:

1. ENERGY STAR certified.
2. RoHS compliant.
3. UL Listing: Listed for damp location.

2.11 SUSPENDED, LINEAR

A. Manufacturers: Subject to compliance with requirements, available manufacturers offering products that may be incorporated into the Work include, but are not limited to the following:
1. As per fixture schedule.
2. Or approved equal.

B. Nominal Operating Voltage: [**120 V ac**]

C. Lamp:

1. Minimum lm as indicated on plans.
2. Minimum allowable efficacy of [**80**] lm/W.
3. CRI of [**minimum**] [**80**] CCT of [**3000 K**] [**3500 K**]
4. Rated lamp life of [**35,000**] [**50,000**] hours to L70.
5. Dimmable from 100 percent to zero percent of maximum light output.
6. Internal driver.
7. User-Replaceable Lamps:

a. Bulb shape complying with ANSI C78.79.
b. Lamp base complying with [**ANSI C81.61**] [**or**] [**IEC 60061-1**].

8. Lens Thickness: At least 0.125-inch minimum unless otherwise indicated.

D. Housings:

1. [**Extruded-aluminum**] housing and heat sink.
2. [**Clear**] [**anodized**] [**powder-coat**] [**painted**] finish.
3. With integral mounting provisions.

E. Doors, Frames, and Other Internal Access: Smooth operating, free of light leakage under operating conditions, and designed to permit relamping without use of tools. Components are designed to prevent doors, frames, lenses, diffusers, and other components from falling accidentally during relamping and when secured in operating position.

F. Diffusers and Globes:

1. [**Tempered Fresnel glass**] [**Prismatic glass**] [**Diffuse glass**] [**Clear glass**] [**Prismatic acrylic**] [**Clear, UV-stabilized acrylic**].
2. Acrylic Diffusers: One hundred percent virgin acrylic plastic, with high resistance to yellowing and other changes due to aging, exposure to heat, and UV radiation.
3. Glass: Annealed crystal glass unless otherwise indicated.
4. Lens Thickness: At least 0.125-inch minimum unless otherwise indicated.

G. Standards:

1. ENERGY STAR certified.
2. RoHS compliant.
3. UL Listing: Listed for damp location.

2.12 SUSPENDED, NONLINEAR

A. Manufacturers: Subject to compliance with requirements, available manufacturers offering products that may be incorporated into the Work include, but are not limited to the following:
1. As per fixture schedule.
2. Or approved equal.

B. Nominal Operating Voltage: [**120 V ac**]

C. Lamp:

1. Minimum lm as indicated on plans.
2. Minimum allowable efficacy of [**80**] lm/W.
3. CRI of [**minimum**] [**80**] CCT of [**3000 K**] [**3500 K**]
4. Rated lamp life of [**35,000**] [**50,000**] hours to L70.
5. Dimmable from 100 percent to zero percent of maximum light output.
6. Internal driver.
7. User-Replaceable Lamps:

   a. Bulb shape complying with ANSI C78.79.
   b. Lamp base complying with [**ANSI C81.61**] [**or**] [**IEC 60061-1**].

8. Lens Thickness: At least 0.125-inch minimum unless otherwise indicated.

D. Housings:

1. [**Extruded-aluminum**] housing and heat sink.
2. [**Clear**] [**anodized**] [**powder-coat**] [**painted**] finish.
3. Universal mounting bracket.
4. Integral junction box with conduit fittings.

E. Doors, Frames, and Other Internal Access: Smooth operating, free of light leakage under operating conditions, and designed to permit relamping without use of tools. Components are designed to prevent doors, frames, lenses, diffusers, and other components from falling accidentally during relamping and when secured in operating position.

F. Diffusers and Globes:

1. [**Tempered Fresnel glass**] [**Prismatic glass**] [**Diffuse glass**] [**Clear glass**] [**Prismatic acrylic**] [**Clear, UV-stabilized acrylic**]
2. Acrylic Diffusers: One hundred percent virgin acrylic plastic, with high resistance to yellowing and other changes due to aging, exposure to heat, and UV radiation.
3. Glass: Annealed crystal glass unless otherwise indicated.

4. Lens Thickness: At least 0.125-inch minimum unless otherwise indicated.

G. Standards:

1. ENERGY STAR certified.
2. RoHS compliant.
3. UL Listing: Listed for damp location.

2.13 MATERIALS

A. Metal Parts:

1. Free of burrs and sharp corners and edges.
2. Sheet metal components shall be steel unless otherwise indicated.
3. Form and support to prevent warping and sagging.

B. Steel:

1. ASTM A36 for carbon structural steel.
2. ASTM A568 for sheet steel.

C. Stainless Steel:

1. Manufacturer's standard grade.
2. Manufacturer's standard type, ASTM A240.

D. Galvanized Steel: ASTM A653.

E. Aluminum: ASTM B209.

2.14 METAL FINISHES

A. Variations in finishes are unacceptable in the same piece. Variations in finishes of adjoining components are acceptable if they are within the range of approved Samples and if they can be and are assembled or installed to minimize contrast.

2.15 LUMINAIRE SUPPORT

A. Single-Stem Hangers: 1/2-inch steel tubing with swivel ball fittings and ceiling canopy. Finish same as luminaire.

B. Wires: ASTM A641, Class 3, soft temper, zinc-coated steel, [**12 gage**] .

C. Rod Hangers: 3/16-inch minimum diameter, cadmium-plated, threaded steel rod.

D. Hook Hangers: Integrated assembly matched to luminaire, line voltage, and equipment with threaded attachment, cord, and locking-type plug.

PART 3 - EXECUTION

3.1 EXAMINATION

A. Examine substrates, areas, and conditions, with Installer present, for compliance with requirements for installation tolerances and other conditions affecting performance of the Work.

B. Examine roughing-in for luminaire to verify actual locations of luminaire and electrical connections before luminaire installation.

C. Proceed with installation only after unsatisfactory conditions have been corrected.

3.2 TEMPORARY LIGHTING

A. If approved by the Architect, use selected permanent luminaires for temporary lighting. When construction is sufficiently complete, clean luminaires used for temporary lighting and install new lamps.

3.3 INSTALLATION

A. Comply with NECA 1.

B. Install luminaires level, plumb, and square with ceilings and walls unless otherwise indicated.

C. Install lamps in each luminaire.

D. Supports:

1. Sized and rated for luminaire weight.
2. Able to maintain luminaire position after cleaning and relamping.
3. Provide support for luminaire without causing deflection of ceiling or wall.
4. Luminaire-mounting devices shall be capable of supporting a horizontal force of 100 percent of luminaire weight and a vertical force of 400 percent of luminaire weight.

E. Flush-Mounted Luminaires:

1. Secured to outlet box.
2. Attached to ceiling structural members at four points equally spaced around circumference of luminaire.
3. Trim ring flush with finished surface.

F. Wall-Mounted Luminaires:

1. [**Attached to structural members in walls**] [**Attached to a minimum 20 gauge backing plate attached to wall structural members**] [**Attached using through bolts and backing plates on either side of wall**] .
2. Do not attach luminaires directly to gypsum board.

G. Suspended Luminaires:

1. Ceiling Mount:

a. [**Two**] 5/32-inch- diameter aircraft cable supports [**adjustable to**] [**10 feet in length**] .
b. [**Pendant mount**] [**Four-point pendant mount**] with [**5/32-inch-**] diameter aircraft cable supports [**adjustable to**] [**10 feet in length**] .
c. Hook mount.

2. Pendants and Rods: Where longer than 48 inches, brace to limit swinging.
3. Stem-Mounted, Single-Unit Luminaires: Suspend with twin-stem hangers. Support with approved outlet box and accessories that hold stem and provide damping of luminaire oscillations. Support outlet box vertically to building structure using approved devices.
4. Continuous Rows of Luminaires: Use tubing or stem for wiring at one point and [**tubing or rod**] [**wire support**] for suspension for each unit length of luminaire chassis, including one at each end.
5. Do not use ceiling grid as support for pendant luminaires. Connect support wires or rods to building structure.

H. Ceiling-Grid-Mounted Luminaires:

1. Secure to any required outlet box.
2. Secure luminaire to the luminaire opening using approved fasteners in a minimum of four locations, spaced near corners of luminaire.
3. Use approved devices and support components to connect luminaire to ceiling grid and building structure in a minimum of four locations, spaced near corners of luminaire.

3.4 IDENTIFICATION

A. Identify system components, wiring, cabling, and terminals.

3.5 FIELD QUALITY CONTROL

A. Perform the following tests and inspections:

1. Operational Test: After installing luminaires, switches, and accessories, and after electrical circuitry has been energized, test units to confirm proper operation.
2. Test for Emergency Lighting: Interrupt power supply to demonstrate proper operation. Verify transfer from normal power to battery power and retransfer to normal.

B. Luminaire will be considered defective if it does not pass operation tests and inspections.

C. Prepare test and inspection reports.

3.6 ADJUSTING

A. Occupancy Adjustments: When requested within [**12**] months of date of Substantial Completion, provide on-site assistance in adjusting the direction of aim of luminaires to suit occupied conditions. Make up to [**two**] visits to Project during other-than-normal hours for this purpose. Some of this work may be required during hours of darkness.

1. During adjustment visits, inspect all luminaires. Replace lamps or luminaires that are defective.
2. Parts and supplies shall be manufacturer's authorized replacement parts and supplies.
3. Adjust the aim of luminaires in the presence of the Architect.

END OF SECTION 265119

SECTION 265213

EMERGENCY AND EXIT LIGHTING

PART 1 - GENERAL

1.1 RELATED DOCUMENTS

A. Drawings and general provisions of the Contract, including General and Supplementary Conditions and Division 01 Specification Sections, apply to this Section.

1.2 SUMMARY

A. Section Includes:

1. Emergency lighting.
2. Exit signs.
3. Materials.
4. Luminaire support components.

1.3 DEFINITIONS

A. CCT: Correlated color temperature.

B. CRI: Color Rendering Index.

C. Emergency Lighting Unit: A lighting unit with internal or external emergency battery powered supply and the means for controlling and charging the battery and unit operation.

D. Fixture: See "Luminaire" Paragraph.

E. Lumen: Measured output of lamp and luminaire, or both.

F. Luminaire: Complete lighting unit, including lamp, reflector, and housing.

1.4 SUBMITTALS

A. Submittals for this section are subject to the re-evaluation fee identified in Article 4 of the General Conditions.

B. Manufacturer’s installation instructions shall be provided along with product data.

C. Submittals shall be provided in the order in which they are specified and tabbed (for combined submittals).

D. Product Data: For each type of emergency lighting unit, exit sign, and emergency lighting support.

1. Include data on features, accessories, and finishes.
2. Include physical description of the unit and dimensions.
3. Battery and charger for light units.
4. Include life, output of luminaire (lumens, CCT, and CRI), and energy-efficiency data.

5. Include photometric data and adjustment factors based on laboratory tests, complying with IES LM-45, for each luminaire type.

    a. Testing Agency Certified Data: For indicated [**luminaires**] [**and**] [**signs**], photometric data certified by a qualified independent testing agency. Photometric data for remaining [**luminaires**] [**and**] [**signs**] shall be certified by manufacturer.
    b. Manufacturers' Certified Data: Photometric data certified by manufacturer's laboratory with a current accreditation under the National Voluntary Laboratory Accreditation Program for Energy Efficient Lighting Products.

E. Shop Drawings: For nonstandard or custom luminaires.

1. Include plans, elevations, sections, and mounting and attachment details.
2. Include details of equipment assemblies. Indicate dimensions, weights, loads, required clearances, method of field assembly, components, and location and size of each field connection.
3. Include diagrams for power, signal, and control wiring.

F. Samples: For each product and for each color and texture specified.

G. Samples for Initial Selection: For each type of luminaire with factory-applied finishes.

H. Samples for Verification: For each type of luminaire.

1. Include Samples of luminaires and accessories to verify finish selection.

I. Product Schedule:

1. For emergency lighting units.[**Use same designations indicated on Drawings.**]
2. For exit signs.[**Use same designations indicated on Drawings**].

J. Submittals for this section are subject to the re-evaluation fee identified in Article 4 of the General Conditions.

K. Coordination Drawings: Reflected ceiling plan(s) and other details, drawn to scale, on which the following items are shown and coordinated with each other, using input from installers of the items involved:

1. Luminaires.
2. Suspended ceiling components.
3. Partitions and millwork that penetrate the ceiling or extend to within 12 inches of the plane of the luminaires.
4. Structural members to which equipment will be attached.
5. Size and location of initial access modules for acoustical tile.
6. Items penetrating finished ceiling including the following:

    a. Other luminaires.
    b. Air outlets and inlets.
    c. Speakers.
    d. Ceiling-mounted projectors.
    e. Access panels.

7. Moldings.

L. Qualification Data: For testing laboratory providing photometric data for luminaires.

M. Product Certificates: For each type of luminaire.

N. Seismic Qualification Data: For luminaires, accessories, and components, from manufacturer.

1. Basis for Certification: Indicate whether withstand certification is based on actual test of assembled components or on calculation.

2. Dimensioned Outline Drawings of Equipment Unit: Identify center of gravity and locate and describe mounting and anchorage provisions.
3. Detailed description of equipment anchorage devices on which the certification is based and their installation requirements.
4. Provide seismic qualification certificate for each piece of equipment.

O. Product Test Reports: For each luminaire for tests performed by [**manufacturer and witnessed by a qualified testing agency**] [**a qualified testing agency**].

P. Sample Warranty: For manufacturer's[**special**] warranty.

1.5 CLOSEOUT SUBMITTALS

A. Operation and Maintenance Data: For luminaires and lighting systems to include in emergency, operation, and maintenance manuals.

1. Provide a list of all lamp types used on Project; use ANSI and manufacturers' codes.

1.6 MAINTENANCE MATERIAL SUBMITTALS

A. Furnish extra materials that match products installed and that are packaged with protective covering for storage and identified with labels describing contents.

1. Lamps: [**10 for every 100**] of each type and rating installed. Furnish at least one of each type.
2. Luminaire-mounted, emergency battery pack: One for every [**20**] emergency lighting units. Furnish at least one of each type.
3. Diffusers and Lenses: [**One for every 100**] of each type and rating installed. Furnish at least one of each type.
4. Globes and Guards: [**One for every 20**] of each type and rating installed. Furnish at least one of each type.

1.7 QUALITY ASSURANCE

A. Luminaire Photometric Data Testing Laboratory Qualifications: [**Luminaire manufacturer's laboratory**] [**Independent NRTL**] that is accredited under National Volunteer Laboratory Accreditation Program for Energy Efficient Lighting Products and complying with applicable IES testing standards.

B. FM Global Compliance: Luminaires for hazardous locations shall be listed and labeled for indicated class and division of hazard by FM Global.

C. Mockups: For interior luminaires in room or module mockups, complete with power and control connections.

1. Obtain Architect's approval of luminaires and signs in mockups before starting installations.
2. Maintain mockups during construction in an undisturbed condition as a standard for judging the completed Work.
3. Approval of mockups does not constitute approval of deviations from the Contract Documents contained in mockups unless Architect specifically approves such deviations in writing.
4. Subject to compliance with requirements, approved mockups may become part of the completed Work if undisturbed at time of Substantial Completion.

D. List of Completed Installations: If brand names other than those specified are proposed for use, furnish the name, address, and telephone number of at least 5 comparable installations which can prove the proposed products have operated satisfactorily for 3 years.

E. Service Availability: A fully equipped service organization shall be available to service the completed Work.

1.8 MAINTENANCE

A. Special Tools: Furnish 2 tools to remove and install fasteners on fixtures equipped with vandal resistant fasteners.

1.9 DELIVERY, STORAGE, AND HANDLING

A. Protect finishes of exposed surfaces by applying a strippable, temporary protective covering before shipping.

1.10 WARRANTY

A. Warranty: Manufacturer and Installer agree to repair or replace components of luminaires that fail in materials or workmanship within specified warranty period.

1. Warranty Period: [**Two**] year(s) from date of Substantial Completion.

B. Special Warranty for Emergency Lighting Batteries: Manufacturer's standard form in which manufacturer of battery-powered emergency lighting unit agrees to repair or replace components of rechargeable batteries that fail in materials or workmanship within specified warranty period.

1. Warranty Period for Emergency Power Unit Batteries: [**Five**] years from date of Substantial Completion. Full warranty shall apply for [**first year and prorated warranty for the remaining four years**] [**the entire warranty period**].
2. Warranty Period for Self-Powered Exit Sign Batteries: [**Five**] years from date of Substantial Completion. Full warranty shall apply for [**first year and prorated warranty for the remaining six years**] [**the entire warranty period**].

PART 2 - PRODUCTS

2.1 PERFORMANCE REQUIREMENTS

A. Seismic Performance: Luminaires shall withstand the effects of earthquake motions determined according to [**ASCE/SEI 7**] [**Luminaires and lamps shall be labeled vibration and shock resistant.**]

1. The term "withstand" means "the luminaire will remain in place without separation of any parts when subjected to the seismic forces specified[**and the luminaire will be fully operational during and after the seismic event**]."

2.2 GENERAL REQUIREMENTS FOR EMERGENCY LIGHTING

A. Electrical Components, Devices, and Accessories: Listed and labeled as defined in NFPA 70, by a qualified testing agency, and marked for intended location and application.

B. NRTL Compliance: Fabricate and label emergency lighting units, exit signs, and batteries to comply with UL 924.

C. Comply with NFPA 70 and NFPA 101.

D. Comply with NEMA LE 4 for recessed luminaires.

E. Comply with UL 1598 for fluorescent luminaires.

F. Lamp Base: Comply with [**ANSI C81.61**] [**or**] [**IEC 60061-1**].

G. Bulb Shape: Complying with ANSI C79.1.

H. Internal Type Emergency Power Unit: Self-contained, modular, battery-inverter unit, factory mounted within luminaire body[**and compatible with ballast**].

1. Emergency Connection: Operate [**one**] <**Insert number**> lamp(s) continuously at an output of [**1100**] lumens each upon loss of normal power. Connect unswitched circuit to battery-inverter unit and switched circuit to luminaire ballast.
2. Operation: Relay automatically turns lamp on when power-supply circuit voltage drops to 80 percent of nominal voltage or below. Lamp automatically disconnects from battery when voltage approaches deep-discharge level. When normal voltage is restored, relay disconnects lamps from battery, and battery is automatically recharged and floated on charger.
3. Environmental Limitations: Rate equipment for continuous operation under the following conditions unless otherwise indicated:

    a. Ambient Temperature: Less than 0 deg F or exceeding 104 deg F, with an average value exceeding 95 deg F over a 24-hour period.
    b. Ambient Storage Temperature: Not less than minus 4 deg F and not exceeding 140 deg F.
    c. Humidity: More than 95 percent (condensing).
    d. Altitude: Exceeding 3300 feet.

4. Nightlight Connection: Operate lamp continuously at [**40**] percent of rated light output.
5. Test Push-Button and Indicator Light: Visible and accessible without opening luminaire or entering ceiling space.

    a. Push Button: Push-to-test type, in unit housing, simulates loss of normal power and demonstrates unit operability.
    b. Indicator Light: LED indicates normal power on. Normal glow indicates trickle charge; bright glow indicates charging at end of discharge cycle.

6. Battery: Sealed, maintenance-free, [**nickel-cadmium**] type.
7. Charger: Fully automatic, solid-state, constant-current type with sealed power transfer relay.
8. Remote Test: Switch in handheld remote device aimed in direction of tested unit initiates coded infrared signal. Signal reception by factory-installed infrared receiver in tested unit triggers simulation of loss of its normal power supply, providing visual confirmation of either proper or failed emergency response.
9. Integral Self-Test: Factory-installed electronic device automatically initiates code-required test of unit emergency operation at required intervals. Test failure is annunciated by an integral audible alarm and a flashing red LED.

I. External Type: Self-contained, modular, battery-inverter unit, suitable for powering one or more lamps, remote mounted from luminaire.

1. Emergency Connection: Operate [**one**] [**LED**] lamp continuously. Connect unswitched circuit to battery-inverter unit and switched circuit to luminaire[**ballast**].
2. Operation: Relay automatically turns lamp on when power-supply circuit voltage drops to 80 percent of nominal voltage or below. Lamp automatically disconnects from battery when voltage approaches deep-discharge level. When normal voltage is restored, relay disconnects lamps from battery, and battery is automatically recharged and floated on charger.
3. Nightlight Connection: Operate lamp in a remote luminaire continuously.
4. Battery: Sealed, maintenance-free, [**nickel-cadmium**] type.
5. Charger: Fully automatic, solid-state, constant-current type.
6. Housing: NEMA 250, Type 1 enclosure listed for installation inside, on top of, or remote from luminaire. Remote assembly shall be located no less than half the distance recommended by the [**emergency power unit**] manufacturer, whichever is less.
7. Test Push Button: Push-to-test type, in unit housing, simulates loss of normal power and demonstrates unit operability.
8. LED Indicator Light: Indicates normal power on. Normal glow indicates trickle charge; bright glow indicates charging at end of discharge cycle.

9. Remote Test: Switch in handheld remote device aimed in direction of tested unit initiates coded infrared signal. Signal reception by factory-installed infrared receiver in tested unit triggers simulation of loss of its normal power supply, providing visual confirmation of either proper or failed emergency response.
10. Integral Self-Test: Factory-installed electronic device automatically initiates code-required test of unit emergency operation at required intervals. Test failure is annunciated by an integral audible alarm and a flashing red LED.

2.3 EMERGENCY LIGHTING

A. General Requirements for Emergency Lighting Units: Self-contained units.

B. Emergency Luminaires:

1. Manufacturers: Subject to compliance with requirements, available manufacturers offering products that may be incorporated into the Work include, but are not limited to the following:

   a. Dual-Lite.
   b. Emergi-Lite.
   c. Exide Electronics.
   d. As indicated on plans
   e. Or approved equal.

2. Emergency Luminaires: as indicated on [**Interior Luminaire Schedule**] [**and**] [**Drawings**], with the following additional features:

   a. Operating at nominal voltage of [**120 V ac**].
   b. [**Internal**] [**External**] emergency power unit.
   c. Rated for installation in damp locations, and for sealed and gasketed luminaires in wet locations.
   d. UL 94 [**5VA**] [**5VB**] [**V-0**] [**V-1**] [**V-2**] [**HB**] flame rating.

C. Emergency Lighting Unit:

1. Manufacturers: Subject to compliance with requirements, available manufacturers offering products that may be incorporated into the Work include, but are not limited to the following:

   a. Dual-Lite.
   b. Emergi-Lite.
   c. Exide Electronics.
   d. As indicated on plans
   e. Or approved equal.

2. Emergency Lighting Unit: <**Insert Drawing designation**> as indicated on [**Interior Luminaire Schedule**] [**Drawings}.**
3. Operating at nominal voltage of [**120 V ac**]
4. [**Wall**] with universal junction box adaptor.
5. UV stable thermoplastic housing[**, rated for damp locations**].
6. Two [**LED**] lamp heads.
7. [**Internal**] [**External**] emergency power unit.

D. Remote Emergency Lighting Units:

1. Manufacturers: Subject to compliance with requirements, [provide products by the following] [provide products by one of the following] [available manufacturers offering products that may be incorporated into the Work include, but are not limited to, the following]:

   a. Dual-Lite.
   b. Emergi-Lite.

c. Exide Electronics.
d. Or equal.

2. Emergency Lighting Unit: as indicated on [**Interior Luminaire Schedule**] [**Drawings**].
3. Operating at nominal voltage of [**120 V ac**]
4. [**Wall**] with universal junction box adaptor.
5. UV stable thermoplastic housing[**, rated for damp locations**].
6. [**Two**] [**LED**] lamp heads.
7. External emergency power unit.

2.4 EXIT SIGNS

A. General Requirements for Exit Signs: Comply with UL 924; for sign colors, visibility, luminance, and lettering size, comply with authorities having jurisdiction.

B. Internally Lighted Signs:

1. Manufacturers: Subject to compliance with requirements, available manufacturers offering products that may be incorporated into the Work include, but are not limited to the following:

a. As per light fixture schedule
b. Or equal.

2. Operating at nominal voltage of [**120 V ac**].
3. Lamps for AC Operation:

a. Fluorescent, two for each luminaire; 20,000 hours of rated lamp life.
b. LEDs; 50,000 hours minimum rated lamp life.

4. Self-Powered Exit Signs (Battery Type): Internal emergency power unit.
5. Master/Remote Sign Configurations:

a. Master Unit: Comply with requirements above for self-powered exit signs, and provide additional capacity in [**LED power supply**] [**battery**] for power connection to remote unit.
b. Remote Unit: Comply with requirements above for self-powered exit signs, except omit power supply, battery, and test features. Arrange to receive full power requirements from master unit. Connect for testing concurrently with master unit as a unified system.

C. Internally Lighted Vandal Resistant Signs:

1. Manufacturers:

a. Kennall
b. Doan

2. Operating at nominal voltage of [**120 V ac**]
3. Lamps for AC Operation:

a. Fluorescent, two for each luminaire; 20,000 hours of rated lamp life.
b. LEDs; 50,000 hours minimum rated lamp life.

4. Self-Powered Exit Signs (Battery Type): Internal emergency power unit.
5. Master/Remote Sign Configurations:

a. Master Unit: Comply with requirements above for self-powered exit signs, and provide additional capacity in [**LED power supply**][**battery**] for power connection to remote unit.

b. Remote Unit: Comply with requirements above for self-powered exit signs, except omit power supply, battery, and test features. Arrange to receive full power requirements from master unit. Connect for testing concurrently with master unit as a unified system.

6. Vandal Resistant Fasteners

D. Self-Luminous Signs:

1. Manufacturers: Subject to compliance with requirements, available manufacturers offering products that may be incorporated into the Work include, but are not limited to the following:

a. Cooper Lighting Solutions; Signify North America Corp.
b. Dual-Lite.
c. Lithonia Lighting; Acuity Brands Lighting, Inc.
d. Or equal.

2. Powered by tritium gas, with universal bracket for flush-ceiling, wall, or end mounting. Signs shall be guaranteed by manufacturer to maintain the minimum brightness requirements in UL 924 for [**20**] years.
3. Use strontium oxide aluminate compound to store ambient light and release the stored energy when the light is removed. Include universal bracket for flush-ceiling, wall, or end mounting.

2.5 MATERIALS

A. Metal Parts:

1. Free of burrs and sharp corners and edges.
2. Sheet metal components shall be steel unless otherwise indicated.
3. Form and support to prevent warping and sagging.

B. Doors, Frames, and Other Internal Access:

1. Smooth operating, free of light leakage under operating conditions.
2. Designed to permit relamping without use of tools.
3. Designed to prevent doors, frames, lenses, diffusers, and other components from falling accidentally during relamping and when secured in operating position.

C. Diffusers and Globes:

1. [**Tempered Fresnel glass**] [**Prismatic glass**] [**Diffuse glass**] [**Clear glass**] [**Prismatic acrylic**] [**Clear, UV-stabilized acrylic**]. Final per Architect approval.
2. Glass: Annealed crystal glass unless otherwise indicated.
3. Acrylic: 100 percent virgin acrylic plastic, with high resistance to yellowing and other changes due to aging, exposure to heat, and UV radiation.
4. Lens Thickness: At least 0.125 inch minimum unless otherwise indicated.

D. Housings:

1. [**Extruded aluminum**] housing[**and heat sink**].
2. [**Clear**] [**anodized**] [**powder coat**] [**painted**] finish.

E. Conduit: [**Rigid galvanized steel**] [**Electrical metallic tubing**] [**Flexible metallic conduit**], minimum 3/4 inch in diameter.

2.6 METAL FINISHES

A. Appearance of Finished Work: Noticeable variations in same piece are not acceptable. Variations in appearance of adjoining components are acceptable if they are within the range of approved Samples and are assembled or installed to minimize contrast.

2.7 LUMINAIRE SUPPORT COMPONENTS

A. Support Wires: ASTM A641/A641M, Class 3, soft temper, zinc-coated steel, [**12 gage**] .

2.8 VANDAL RESISTANT

A. Cabinet door having vandal resistant fasteners or lockable device and continuous piano hinge.

PART 3 - EXECUTION

3.1 EXAMINATION

A. Examine substrates, areas, and conditions, with Installer present, for compliance with requirements for conditions affecting performance of luminaires.

B. Examine roughing-in for luminaire to verify actual locations of luminaire and electrical connections before luminaire installation.

C. Examine walls, floors, roofs, and ceilings for suitable conditions where emergency lighting luminaires will be installed.

D. Proceed with installation only after unsatisfactory conditions have been corrected.

3.2 INSTALLATION

A. Comply with NECA 1.

B. Install luminaires level, plumb, and square with ceilings and walls unless otherwise indicated.

C. Install lamps in each luminaire.

D. Supports:

1. Sized and rated for luminaire[**and emergency power unit**] weight.
2. Able to maintain luminaire position when testing emergency power unit.
3. Provide support for luminaire and emergency power unit without causing deflection of ceiling or wall.
4. Luminaire-mounting devices shall be capable of supporting a horizontal force of 100 percent of luminaire and emergency power unit weight and vertical force of 400 percent of luminaire weight.

E. Wall-Mounted Luminaire Support:

1. [**Attached to structural members in walls**] [**Attached to a minimum 20-gage backing plate attached to wall structural members**] [**Attached using through bolts and backing plates on either side of wall**].
2. Do not attach luminaires directly to gypsum board.

F. Suspended Luminaire Support:

1. Pendants and Rods: Where longer than 48 inches, brace to limit swinging.
2. Stem-Mounted, Single-Unit Luminaires: Suspend with twin-stem hangers. Support with approved outlet box and accessories that hold stem and provide damping of luminaire oscillations. Support outlet box vertically to building structure using approved devices.
3. Continuous Rows of Luminaires: Use tubing or stem for wiring at one point and [**tubing or rod**] [**wire support**] for suspension for each unit length of luminaire chassis, including one at each end.
4. Do not use ceiling grid as support for pendant luminaires. Connect support wires or rods to building structure.

G. Ceiling Grid Mounted Luminaires:

1. Secure to any required outlet box.
2. Secure emergency power unit using approved fasteners in a minimum of four locations, spaced near corners of emergency power unit.
3. Use approved devices and support components to connect luminaire to ceiling grid and building structure in a minimum of four locations, spaced near corners of luminaire.

3.3 IDENTIFICATION

A. Identify system components, wiring, cabling, and terminals.

3.4 FIELD QUALITY CONTROL

A. Perform the following tests and inspections:

1. Test for Emergency Lighting: Interrupt power supply to demonstrate proper operation for 90 minutes. Verify transfer from normal power to battery power and retransfer to normal.

B. Luminaire will be considered defective if it does not pass operation tests and inspections.

C. Prepare test and inspection reports.

3.5 STARTUP SERVICE

A. Perform startup service:

1. Charge [**emergency power units**] [**and**] [**batteries**] minimum of one hour and depress switch to conduct short-duration test.
2. Charge [**emergency power units**] [**and**] [**batteries**] minimum of 24 hours and conduct one-hour discharge test.

3.6 ADJUSTING

A. Adjustments: Within [**12**] months of date of Substantial Completion, provide on-site visit to do the following:

1. Inspect all luminaires. Replace lamps, [**emergency power units**] [**batteries,**] [**signs,**] or luminaires that are defective.

   a. Parts and supplies shall be manufacturer's authorized replacement parts and supplies.

2. Conduct short-duration tests on all emergency lighting.

END OF SECTION 265213

SECTION 283102

PROTECTED PREMISES FIRE ALARM EMERGENCY COMMUNICATION SYSTEM

PART 1 – GENERAL

1.1 DESCRIPTION OF WORK

A. The Work shall include all labor, equipment, materials and necessary services to provide a complete addressable Manual, Automatic Smoke/Heat/Carbon Monoxide Detection Alarm System with Central Office Connection (hereinafter denoted by the phrase "the system"). The system shall be addressable, with all initiating devices individually annunciated on the Fire Alarm Control Panel, the remote annunciator and the printer. Evacuation alarm tones shall be programmed to be "Temporal 3". The system shall have supervised wiring with all operations as herein described. The system shall consist of, but not be limited to, the following:

1. Fire alarm control panel(s) with English text annunciator/printer and remote annunciator.
2. Manual pull stations
3. Area smoke detectors.
4. Duct smoke detectors.
5. Carbon monoxide detectors.
6. Heat Detectors.
7. Audible Notification Appliances - Horns.
8. Visual Notification Appliances (Strobes).
9. Air handling systems and Rooftop Heating and Cooling Units (RTU) shutdown controls.
10. Exhaust fan, make-up air fan and fire/smoke damper control for smoke control systems**.**
11. Electromagnetic door holders, electromagnetic fail–safe door locks and release controls.
12. Fire Alarm Circuit Breaker Connection (120V) in the electrical room.
13. Battery Backup.
14. Remote Annunciation at:
    a. Storage 2018 (Printer).
    b. Upper Floor Vestibule (Remote Annunciator with LCD Display.
15. Digital Alarm Communicator Transmitter (DACT) for Central Station notification**.**
16. Emergency Generator status monitoring.

1.02 APPLICABLE LISTINGS, CODES AND STANDARDS

A. The 2020 New York State Uniform Fire Prevention and Building Code.

B. The 2020 New York State Building Code.

C. The 2020 New York State Mechanical Code.

D. The 2020 New York State Fire Code.

E. The 2020 National Electrical Code – NFPA 70.

F. NFPA 72.

H. NFPA 92

I. NFPA 13

J. UL 1971 and ADA Guidelines related to Strobe Synchronization.

K. UL 864 – 9th Edition requirements for fire alarm control equipment. Contractor shall submit proof in writing from the proposed Fire Alarm System manufacturer that submitted Fire Alarm Control Panel has been UL listed based on the UL 864 9th Editions and FDNY Certificate of Approval.

L. UL 2075-13 – 2nd edition related to "Gas and Vapor detectors and sensors" for CO detectors.

M. UL listings for all fire alarm equipment shall be for its intended use.

N. UL 268 – 7th edition related to smoke detection devices.

O. UL 2034 – 4th edition related to carbon monoxide alarms

P. UL 60335-2-40 – 2nd edition related to use of A2L refrigerants

1.03 RELATED WORK

A. The Contractor shall coordinate the work in this Section with all related trades. Work and/or equipment provided in other Sections and related to the fire alarm system shall include, but not be limited to:

1. Sprinkler water flow and tamper switches shall be provided by the Mechanical trade. See Division 23. The switches shall be wired and connected to the Fire Alarm System by this Contractor.

2. Air handling systems and Rooftop Heating and Cooling Units (RTU) fan and damper control circuits shall be furnished by the air handling system's control equipment. See Division 23. Interconnecting wiring to the Fire Alarm System shall be provided by this Contractor.

3. Emergency generator status contacts to be provided with the emergency generator control equipment to indicate:

a. Emergency generator running.

b. Emergency generator failure.

Interconnecting wiring to the Fire Alarm System shall be provided by this Contractor.

4. Boiler and non-electric hot water heater control circuits shall be furnished by the equipment's control equipment for shut-down upon activation of **c**arbon **m**onoxide, gas leak detection panel alarm, and heat detectors.

Interconnecting wiring to the boilers and gas fired hot water heaters from the Fire Alarm Control Panel shall be provided by this contractor.

5. A2L utilizing HVAC heat pump/refrigeration equipment and leak detection panel(s) alarm shall be connected to Fire Alarm Control Panel through monitoring modules.

Interconnecting wiring to the HVAC heat pump refrigeration equipment and refrigerant leak detection panel(s) from the Fire Alarm Control Panel shall be provided by this contractor.

1.04 SYSTEM DESCRIPTION

A. The system shall perform as described below. All equipment, components, and labor required shall be provided by the Contractor.

B. Fire Alarm Initiation

1. Fire alarm initiation shall be accomplished by:

a. Operation of a manual pull station.

b. Operation of a duct mounted Smoke Detector in the HVAC ductwork or equipment.

c. Operation of an Area Smoke Detector.

d. Operation of a Heat Detector.

C. Alarm Indications

1. Operation of a manual pull station:

a. Operation of a pull station shall immediately alarm the building audibly via the sounding an evacuation signal of continuous “Temporal 3” tones over the horns and visibly with the flashing of strobe lights. The horns and strobes shall operate continuously until an acknowledge/silence button on the Fire Alarm Control Panel is pushed. In addition, manual pull station operation shall be communicated as a “manual alarm” to the central station through the DACT.

2. Activation of a carbon monoxide detector:

Activated Carbon Monoxide Detector shall sound the integral horn (integral to the CO detector) in a “Temporal 4” tone. No evacuation signal shall be sounded upon activation of a carbon monoxide detector. Activation of the carbon monoxide detectors shall send an alarm to the panel and be communicated as a “CO Alarm” to the central station through the DACT.

5. Other devices connected to the Fire Alarm system:

a. Emergency generator status contacts shall be monitored by a central supervisory station as individual “Supervisory Signals” (per device type).

Trouble signals from the Fire Alarm Control Panel shall be monitored by a central supervisory station as a “General Trouble”.

D. Other Fire Alarm System Operations

1. Fan Shutdown

a. Operation of a pull station shall not shut down any fans in the building. Activation of any automatic fire alarm initiating device shall shut down all fans 2,000 CFM and larger (except direct exhaust fans), close all fire/smoke dampers and purge dampers, release magnetic door holders and immediately unlock all electromagnetically locked doors.

2. Boiler and hot water heater shut-down

Activation of a carbon monoxide detector or heat detector within the space of the boilers and non-electric water heater shall shut down boilers and non-electric water heaters.

3. Fuel Supply shut-down

Activation of a heat detector in a generator room/enclosure or equipment room with fuel burning equipment shall shut down the supply of additional fuel oil from being pumped into the room or enclosure. Activation of a smoke detector in mechanical space shall only send a signal to the Fire Alarm Panel.

4. Annunciation

a. Activation of any fire alarm initiating device, supervisory device and trouble signals shall be recorded individually at the printer and indicated at the control panel and at the remote annunciator.

E. Display Module Operation/Indications

1. An alarm may be acknowledged by actuating the "ALARM/TROUBLE ACKNOWLEDGE" key/button. This shall silence the audible device in the Fire Alarm Control Panel and change the "SYSTEM ALARM" LED from flashing to steadily lit.

2. If multiple alarm conditions are present, the first alarm must be shown on the LCD display. The LCD display can then be scrolled to show all other alarm conditions.

3. Failure of normal power, open or short circuits, disarrangement in system wiring, failure of microprocessor, failure of any addressable module or any ground fault condition shall activate the system trouble circuitry. Amber "SYSTEM TROUBLE" LED shall illuminate when any of these conditions exist. Along with the trouble LED, a steady trouble audible signal shall be sounded and an alphanumeric trouble error message shall be displayed on the LCD display.

4. All trouble conditions and error messages shall be indicated on the system printer, including the time and date of each occurrence.

5. A trouble signal may be acknowledged by actuating the "ALARM/TROUBLE ACKNOWLEDGE" key/button. This shall silence the trouble audible signal and change the display from flashing to steady. If multiple trouble conditions are present, the LED shall stay lit and the audible signal will sound until all troubles are acknowledged.

6. During an "alarm" condition, all "trouble" signals shall be suppressed with the exception of illumination of the "SYSTEM TROUBLE" LED.

1.05 QUALITY ASSURANCE

A. Equipment/System

1. All equipment furnished under these Specifications shall be UL Listed for its intended purpose.

2. All Fire Alarm Control Panels shall be UL listed in accordance with UL 864 – 9th Edition and listed in the UL Fire Protection Equipment Directory under product category “Control Units System (UOJZ)”.

B. Manufacturer

1. The manufacturer shall have been engaged in the production of this type of equipment for at least ten (10) years.

2. The manufacturer shall have at least three authorized and fully equipped service organizations (Fire Alarm Companies) located within fifty (50) miles of the installation.

C. Fire Alarm Company

1. The Fire Alarm Company providing the material and supervision shall be a manufacturer - authorized distributor for the equipment to be provided.

2. The Fire Alarm Company shall be located within fifty (50) miles of the installation.

3. If brand names other than those specified are proposed for use, the Fire Alarm Company shall pay all costs, including travel expenses to the test facility for the Owner's Representative to witness the tests demonstration.

4. The Fire Alarm Company shall be a manufacturer - trained and authorized repair and service organization capable of providing on-site supervision throughout the project and warranty/maintenance service after acceptance.

5. The Fire Alarm Company shall provide all technical support required for an operational system. All technicians shall provide all of the following qualifications in writing prior to bid award:

   * NICET Level 2 in Fire Alarm Systems,

   * Factory Certificate for the proposed equipment

D. Company Field Advisor

The Fire Alarm Company shall provide a Company Field Advisor to provide all technical supervision and installation support. That individual shall provide all of the following qualifications in writing prior to bid award: NICET Level 3 in Fire Alarm Systems, Factory Certificate for the proposed equipment and a Fire Department Certificate of Fitness. Company Field Advisor shall be available for a minimum of 16 working hours for the following:

1. Render advice regarding the installation and final adjustment of the system.

2. Render advice on the suitability of each signal-initiating device for its particular application.

3. Witness final system tests and then certify with an affidavit that the system is installed in accordance with the Contract Documents and applicable codes, and is operating properly.

4. Train facility personnel in operation, programming, and routine maintenance of the system (minimum of 4 hours).

5. Explain available service programs to facility supervisory personnel for their consideration.

1.06 SUPPLEMENTAL SUBMITTALS

A. Fire Alarm Contractor shall submit the following material for review by the Engineer of Record and Owner's Representative.

1. Provide a list (bill of materials) of all equipment and components to be used in the system.

2. Provide description of operation of the system, to include any and all exceptions, variances or substitutions. Include a copy of printer headings, reports, prompts, etc.

3. Provide system Ampere load (during both normal and alarm conditions) and time calculations to substantiate compliance (battery Ampere-Hour capacity) with battery back-up power requirements for a 24-hour standby. Provide standard battery calculations based on NFPA 72.

4. Provide manufacturer's printed product data, catalog pages and descriptions of any special installation procedures.

5. Provide Data from the Manufacturer proving that:

   a. Fire alarm initiating devices that receive their power from the initiating circuit of a Fire Alarm Control Panel are multiple listed by the UL for use with the control unit.

   b. UL listings of all products and components.

   c. The batteries proposed for use are compatible with the battery charger.

6. Provide Shop Drawings as follows:

   a. Large scale drawing, including actual dimensions, of the fire alarm control panel(s) (FACP), and all ancillary equipment.

   b. Riser diagram showing all equipment and types, all connections and number and size of all conductors.

   c. Floor plans showing all equipment and types, all connections and number and size of all conductors.

7. Provide a schedule, for review and approval, of the proposed label for each auxiliary control switch at the fire alarm control panel.

8. Provide a schedule, for review and approval, of the proposed label and color for each LED/lamp indicator at the remote annunciator.

9. Provide samples of equipment, as requested by the Owner.

10. If the new system is a replacement of an existing system, the Contractor shall provide an outline of detailed migration path describing how existing system will be replaced while providing full Fire Protection during the process. Failure to secure approval or submit this migration path will require contractor to accept all required Fire Watches to maintain full fire protection of the building at all times.

11. Certification of operability for Fire Alarm equipment that is to remain operable following the design earthquake ground motion per Section 13.2.2 of ASCE 7-16.

12. Close-out submittals as listed in Part 3 of this specification.

13. Warranty

1.07 MAINTENANCE

A. Service Availability of the Fire Alarm Company

It shall be a fully equipped service organization, capable of guaranteeing response time within 8 hours to service calls, shall be available 24 hours a day, 7 days a week to service the complete Fire Alarm System.

1.08 WARRANTY

A. Special Warranty: Written warranty, executed by manufacturer agreeing to repair or replace materials or workmanship for a period of one (1) year from the date of Substantial Completion (successful 100% acceptance testing by Owner's Representative).

PART 2 - PRODUCTS

2.01 MANUFACTURERS

A. The following manufacturers are approved for the furnishing of the specified items of Fire Detection and Signaling Equipment: Honeywell.

B. Each item of equipment offered by these manufacturers must meet the full requirements of the Specification for that item, and shall be UL listed in accordance with UL 864 – 9th Edition and listed in the UL Fire Protection Equipment Directory under product category "Control Units System (UOJZ)".

2.02 APPROVALS

A. The fire alarm system, as installed, shall be approved by the Fire Department of Clarkstown.

2.03 EQUIPMENT

A. General

1. The following equipment where shown on the Drawings or called for in the Specifications shall be furnished and installed by the Contractor at locations where shown on the Drawings, called for in the Specifications or as otherwise directed in writing by the Owner.

B. Manual Pull Station

1. Provide an addressable manual pull station at each location indicated on the Drawings or called for in the Specifications.

2. Each pull station shall be addressable manual pull lever single-action type. When operated, the handle shall be locked in the operated position until the station is reset (by use of either a key or a reset tool, depending on model).

3. Each pull station shall have hinged inner and outer doors with the inner door locked. A common key shall be required to gain access for resetting the station. Instructions for operating station shall appear on front of the outer door.

4. The pull station shall be interfaced into the addressable system by means of an internal or external addressable interface module.

5. For surface or semi-flush mounting, the mechanism shall be set into a separate stamped steel box with one 3/4" knockout. All parts shall have a baked enamel red finish and exposed edges shall be rounded. Pull stations with internal module shall be UL listed for use with the FACP.

6. Pull stations shall be set so that the top of the operating lever of station shall be 3'-6" to 4'-0" above the finished floor. The Contractor shall report to the Owner's Representative any interference with wainscot, or other construction or mechanical equipment.

7. False Fire Alarm Stopper Cover: Provide false fire alarm stopper cover to fit every pull station shown on the drawings, with a maximum protrusion from the face of the wall of 4" to meet ADA requirements.

C. Audible Notification Appliances (Horns or speakers)

1. The Contractor shall provide fire alarm horns or speakers wherever the Drawings require them.

2. Each horn shall be installed on a single gang or standard 4" galvanized electrical box, either flush or surface mounted, as indicated on Drawings. Provide weatherproof box and gasket in damp, wet or exterior locations.

3. Horns shall be electrically polarized and include a blocking network to allow for connection to a supervised fire alarm signal circuit.

4. Each horn shall have a high volume setting between 80 and 86 dBA at 10'-0". Each horn shall have adjustable Hi-Lo dBA setting.

5. Horns shall be 24 VDC and shall have a selectable “Temporal 3” setting to allow one pair of wires to power both horn and strobe.

6. All horns shall be by single supplier.

D. Visual Notification Appliances (Strobes)

1. The rating of the strobe unit shall be a minimum of 15 candelas and shall deliver all characteristics and requirements called for in NFPA 72 and the American with Disabilities Act (ADA), including the “Equivalent Facilitation” rule, and UL 1971.

2. In corridors, places of assembly and common areas, the strobes shall be synchronized when 3 or more strobes are in line of sight. Strobes to be synchronized shall be UL listed for use with the FACP/power source to ensure synchronization.

3. Strobes shall be listed for wall-mounted application.

4. Strobes shall operate on 24 volts DC.

5. A translucent dome of hi-impact plastic, with the work "Fire" silk-screened red in 1/2" high letters, shall be provided to provide readability from both sides of the unit. The dome shall be screw-fastened or epoxied to plate so as to prevent dome from being removed.

6. Strobes and their wiring shall be 100% supervised by the Fire Alarm Control Panel.

7. The indicator shall be mounted to a flush 1-gang or 4-inch square electrical box with suitably placed threaded holes to accept mounting of the device.

8. Strobes installed in damp, wet or exterior locations shall be provided with a weatherproof box and gasket listed for such application.

9. Strobes shall be by Honeywell.

E. Audible/Visual Notification Appliances (Horns/Strobes or Speaker/Strobes)

1. Where indicated on Drawings horns shall come equipped with a strobe unit that mounts directly to basic horn mechanism.

2. The strobe section and horn section shall be separate and can be connected to either separate signal circuit loops or to the same signal circuit loop.

3. Horn and strobe components of a horn/strobe unit shall meet all criteria listed above.

4. Horns/strobe units shall be by Honeywell. Strobes to be synchronized shall be UL listed for use with the FACP/power source to ensure synchronization.

F. Area Type Smoke Detectors

1. The Contractor shall provide intelligent analog addressable smoke detectors with bases at locations shown on the Drawings or called for in the Specifications. Ionization type area smoke detectors are not permitted.

2. Smoke detectors shall operate on 24V D.C. received from the Fire Alarm Control Panel. Smoke detectors shall be analog type supervised by the panel for sensitivity rating within acceptable thresholds. Deviations shall be annunciated at the Fire Alarm Control Panel & Remote Annunciator(s).

3. All smoke detectors shall be supplied with an LED indicator lamp, which shall give indication that the smoke detector is active (flash) and latch (on steady) when the detector has tripped into alarm.

4. Area type photoelectric smoke detector shall be BY Honeywell. Detectors shall comply with UL 268 7th edition and be UL listed for use with the FACP.

G. Heat Detectors

1. Contractor shall provide heat detectors in boiler room, mechanical rooms being fed with fuel oil, generator room or prefabricated enclosure of exterior mounted units, kitchen, and in other locations as shown on plans.

2. Heat detectors shall be by Honeywell (for 194°F Applications). Detectors shall be UL listed for use with the FACP.

H. Guards

1. Guards shall be 9-gauge minimum wire that will provide protection without interfering with the operation and maintenance of the unit. The guard shall have a heavy-duty corrosion-resistant polyester coating to protect against rust and corrosion. Guards for audible and visual notification devices shall be UL listed.

I. Duct Smoke Detectors

1. The Contractor shall provide intelligent addressable photoelectric duct smoke detectors at locations shown on the Drawings. Ionization type duct smoke detectors are not permitted. Where indicated in Division 23 specifications, provide units to equipment manufacturers for installation by manufacturer in their units.

2. Duct detectors shall be designed for mounting on the outside of ducts with air sampling tubes extending into the air stream within the duct.

3. Duct detectors shall be provided complete with outlet box, photoelectric detector chamber, sampling tubes, sensitivity control.

4. Ducts detectors shall be analog addressable, operate on 24 volts D.C. received from the Fire Alarm Control Panel and shall be 100% supervised by that panel. 110 VAC duct smoke detectors are not permitted.

5. The Contractor shall arrange for the sheet metal trades to drill holes in the ductwork for mounting the smoke detectors and its sampling tubes. That trade shall perform the actual mounting of these items on and within the ductwork.

6. All sampling tubes shall be sized to fit the interior dimensions of the ductwork being penetrated and in a manner that meets the NFPA 72 and manufacturer's specifications.

7. The Contractor shall consult the Fire Alarm and HVAC Drawings for the exact locations of all duct detectors and sampling tube sizes.

8. In areas where the ducts are very small in interior dimensions (e.g., 12"-36”), spot-type smoke detectors may be installed within those ducts. These detectors shall be UL listed for this application and air velocity.

9. All duct type smoke detectors and spot-type smoke detectors inside the ducts, when not clearly visible from the floor area, shall be provided with a remote L.E.D. indicator lamp, at readily visible location, which shall give a local indication that the detector has been activated.

10. Duct detector shall be Honeywell. Detectors shall comply with UL 268A. Duct detectors shall also be UL listed for use with the FACP, though 4-wire weatherproof detectors required in paragraph 11 below do not require cross listing with the FACP if the manufacturer of the FACP does not have such a device. All duct detectors shall be rated for air velocities ranging from 100 feet per minute to 4,000 feet per minute.

11. Duct detectors installed in exterior ductwork or exterior mechanical units (e.g., roof mounted RTU's, air handlers) shall be the weatherproof model number that has an operating range of -4°F to 158°F and have a weatherized housing to prevent condensation from humidity and water infiltration.

J. Carbon Monoxide Detectors.

1. The Contractor shall provide carbon monoxide detectors where shown on the drawings.

2. Carbon monoxide detectors shall be designed to detect the presence of carbon monoxide.

3. Carbon monoxide detectors shall be listed in accordance with UL 2075-04 (revised 7/20/05) and have, at a minimum the response times as follows:

   At 70 +/- 5 ppm, unit must alarm within 60-240 minutes.

   At 150 +/- 5 ppm, unit must alarm within 10-50 minutes.

   At 400 +/- 10 ppm, unit must alarm within 4-15 minutes.

4. Carbon Monoxide detectors shall operate on an addressable circuit connected to the Fire Alarm Control Panel, and have an integral trouble signal that will send trouble/supervisory signals to the control panel for conditions including sensor failure, sensor missing, or end-of-life signal. They shall be capable of being system-monitored.

5. Carbon monoxide detector shall have an operating temperature of 32°F (or less) to 104°F (or more).

6. Carbon monoxide detector must be wired for supervised operation, and shall send a trouble condition to the panel when sensor supervision is in a trouble condition.

7. Carbon Monoxide detectors shall be Honeywell with sounder base.

9. Use of Carbon Monoxide Alarms (Stand-alone) is not permitted.

K. Alarm Interface Modules

1. Alarm interface Modules shall interface normally open contacts of tamper switches and other supervisory devices to the addressable Fire Alarm System.

2. Each Interface Module shall provide selector switches to set an individual address to identify the module to the fire alarm control panel. These switches shall be field adjustable. Interface Modules that require an external programmer or PROM burner shall not be acceptable.

3. Alarm Interface module shall be Honeywell. Modules shall be UL listed for use with the FACP.

L. Control Relay Interface Module

1. Control Relay Interface Modules shall interface auxiliary equipment such as door holders, electromagnetic locks, fire/smoke dampers, fan shut down control points to the addressable Fire Alarm System.

2. Each Interface Module shall provide selector switches to set an individual address to identify the module to the fire alarm control panel. These switches shall be field adjustable. Interface Modules that require an external programmer or PROM burner shall not be acceptable. Interface module shall be Honeywell. Modules shall be UL listed for use with the FACP.

M. Alphanumeric Printer

1. A UL Listed approved alphanumeric printer shall be provided, capable of printing the appropriate addressable device number and customized location message for any active device.

2. Any device status message shall be printed with date and time of occurrence.

3. The Contractor shall provide a printed list of the addresses for all manual pull stations with respect to exits, stairs (not column numbers) or adjacent room numbers. Included in this list shall also be addresses for all other initiating devices.

   This list shall be mounted on the wall of the IT Office, where directed, behind a transparent non-breakable; non-inflammable plastic face set in aluminum frame. Submit list for approval before installation.

4. Printer shall be Honeywell. Laser printer may be allowed, provided they are listed for use with the Fire Alarm Control Panel. Printers located more than 50 ft from the FACP will require the use of a powered modem to allow for proper RS232 communications. Acceptable models are Patton Electronics model 1000, Black Box model DCE/DTE, or approved equal.

N. Liquid Crystal Display Remote Annunciator

1. Contractor shall provide in General Office and where shown on drawings a Remote Annunciator with a 4-line/80-character per line LCD display.

2. The Remote Annunciator shall be Honeywell.

O. Flame Detectors

1. Contractor shall provide flame detectors in room with gas pressure of 15 psi or greater.

2. Flame detector shall be explosion proof and be capable of connection to any standard monitoring module. Detector shall be Fire Sentry Corporation FS18X, Detronics Model# U5005, or General Monitor #FL3100. Monitoring module must be placed outside the explosion proof area.

P. Document Storage Box

Provide a storage box large enough to store the fire alarm documents for ready use by the Fire Department similar to FDB Box by Space Age Electronics, or approved equal. Box to be red and use FDNY access keys.

2.04 <u>CONTROL PANELS</u>

A. Fire Alarm Control Panel

1. Fire Alarm Control Panel shall be Honeywell Silent Knight 6700.

2. The Fire Alarm Control Panel and associated Data Gathering Panels (DGPs) must be listed in accordance with UL 864 9th Edition. Contractor must provide proof of such listing.

B. System Power Supply

1. The system power supply shall operate on 120 VAC main power. This power shall be transformer converted to low voltage providing rectified and filtered 24 VDC for system operation. This 24 VDC shall be rated @ 4 Amps and shall comply with U.L. Standard 864 9th Edition for power limited operation.

2. The power supply shall provide power for all system and auxiliary control functions, including the charging of the back-up batteries.

4. The charger output shall be supervised and fused.

5. The battery charger shall be capable of charging lead acid batteries.

6. The batteries shall be sized to provide 24 hours of standby operation in the supervision mode, with 15 minutes of full general evacuation operation of all notification appliances at the end of the 24-hour standby.

7. System power supply shall be by Honeywell.

C. Microprocessor Module

1. The microprocessor module shall contain the microprocessor, memory, system operating software, configuration memory and the circuits necessary to support the fire control system.

2. The microprocessor module shall function as the system's information and control center, processing all messages from the field devices (supervisory, trouble, alarm).

3. Microprocessor Functions

a. The microprocessor shall execute all supervisory programming to detect and report the failure or disconnection of any module or peripheral device. An isolated circuit shall be incorporated, which will monitor the microprocessor, if a failure were to occur, this circuitry would provide audible and visual indication of this abnormal condition.

b. The microprocessor shall access the system program for all control-by-event (CBE) functions. No system memory shall be lost due to failure of the primary and secondary power. Volatile memory shall not be acceptable.

c. All job specific system programming, as to device monitoring and control functions, shall be field programmable.

4. Real-Time Clock

a. The microprocessor module shall have a real-time clock capable of monitoring all real-time programming and all time control functions.

D. Display & Switch Module

1. These modules shall provide display, annunciation and control for the complete Fire Alarm Control System.

2. An alphanumeric, true English, display shall be an integral part of the module. This display shall be back - lighted for ease of reading in the dark or bright ambient light conditions.

3. The Module shall provide a keypad permitting selection of system functions. Also incorporated with the keypad shall be three (3) control keys: ALARM/TROUBLE ACKNOWLEDGE, RESET and ALARM SILENCE.

E. Notification Appliance Circuits

1. Provide a Notification Appliance Circuit Module in the Fire Alarm Control Panel to supervise the audible and visual notification appliance circuit wiring for open conditions, grounds and shorts.

2. Field - located modules shall be housed in Transponders or other approved enclosures.

3. The use of Control Modules for signal circuits will not be accepted.

F. Coder Module

1. For CO detection, provide coder module located at the Fire Alarm Control Panel. Coder module shall be capable of providing continuous operation of “Temporal 4” (4-4-4-4…) tone, until silenced at the Fire Alarm Panel, to indicate CO detection.

G. Addressable Loop Module

1. An addressable loop module shall be provided for communications with all addressable devices (initiation/control) connected to the system.

2. Each addressable loop module shall contain one loop, capable of communicating with a minimum of 160 addressable devices. Each system shall be capable of monitoring multiple loop modules. Provide a minimum of 25% spare capacity on each loop.

3. Communication loops shall be wired as Class "A" (a ground fault on either conductor or a break shall not prevent a device from operating on either side of the break).

4. Each communication loop shall be electrically supervised for opens, shorts, and ground fault conditions.

5. The system shall be capable of a minimum capacity of 125 addressable smoke detectors, 125 addressable control modules and additional capacities for full point annunciation without decreasing the aforementioned capacities.

H. Monitoring of Fire/Smoke Damper End-Switches and damper activation

1. The mechanical contractor shall provide Smoke Dampers (SD) and Combination Fire/Smoke Dampers (FSD) with actuators and proof-of-open end-switches. The FACP shall command all dampers open/closed and shall monitor all damper end-switches for proof-of-open using distributed, addressable monitoring modules.

2. Smoke Dampers and Fire/Smoke Dampers

These dampers shall be commanded open/closed and monitored through addressable control modules, grouping together up to five dampers. The end-switches of these groups shall be wired together as a common input to the addressable monitoring module to provide proof-of-open status. When any one member of a SD or FSD group fails to prove-open, a common trouble condition shall be annunciated at the FACP by lighting a single, common LED which shall be labeled “SD/FSD Status”. This LED shall indicate that there are one or more SD/FSD groups which have failed to prove open. This shall be provided by programming within the FACP. The FACP alphanumeric visual display shall indicate the individual addresses of the SD/FSD groups which failed to prove open.

I. Fans Restart

1. Fans shut down due to alarm activation shall not automatically restart upon fire alarm system reset. After fire alarm system reset, activation of a separate switch on the fire alarm panel is required before the fans can be re-started. To eliminate the possibility of all fans turning on simultaneously, restarting the fans shall be accomplished by turning them back on individually in a sequential fashion controlled through software timers at the Fire Alarm Control Panel.

J. Digital Alarm Communicator System (DACT).

1. A Digital Alarm Communicator System shall be installed to send alarm, supervisory and trouble signals to a Clarkstown Fire Department approved Central Station.

2. The DACT shall be integral to the fire alarm control panel (FACP) and shall be labeled to indicate the central station monitoring. Ensure the utility's phone line has at a minimum a 90-minute battery back-up.

3. Optional IP with Cellular Interface is used for applications where Plain Old Telephone (POTs) lines are not available or where Managed Facility Voice Network (MFVN) analog lines do not provide a stable interface.

   a. IP with Cellular Interface similar to Model DMP Model DUALCOMNF-L*: The DUALCOMNF-L*(LV for Verizon Cat M1 LTE or LA for AT&T Cat M1 LTE) is used in conjunction with the 3-MODCOM or approved equal.

   b. The DUALCOMNF shall capture the contact ID string from the 3-MODCOM and transmit the signal over IP to a UL-Listed central station. This connection captures Contact ID messages from the panel that are based on the SIA communication standard DC-05-1999.09-DCS. Messages are then formatted into a Serial 3 message and sent to an SCS-1R Receiver or SCS-VR Receiver.

   c. It shall include a red housing and be powered by regulated 24Vdc from the control panel.

   d. The Communicator shall be capable of supporting Network communication using existing Ethernet data networks, satellite communication, fiber optic networks, local area networks, wide area networks.

   e. The communicator shall also support LTE cellular communication using retail data networks.

   f. The communicator shall be configured as a dual path system with primary network communication, a single path system with network communication or a single path system with cellular communication based on local Authority Having Jurisdiction (AHJ) and NFPA 72.

   g. All network and cellular connection shall be approved by FDNY and shall have an FDNY Certificate of approval.

   h. Electrical Contractor shall run cat 6 from fire alarm control panel to nearest IDF/MDF closet for the IP communication and shall integrate and coordinate with DIIT for connection to DATA Rack to call out via IP communication.

K. BMS Notification Module

Provide a notification module with dry contact and associated programming in relation to the fan shut down that will allow the Temperature Controls Contractor to connect a control wire from the BMS system to the module that will notify the BMS system when the fans are shut down by the FACP, thereby allowing the BMS system to shut down other operating portions of the mechanical unit.

2.05 MARKERS, RISER DIAGRAM, AND OPERATING INSTRUCTIONS

A. Markers

Premarked self-adhesive; W.H. Brady Co.'s B940, Thomas and Betts Co.'s E-Z Code WSL self-laminating, Ideal Industries' Mylar/Cloth wire markers, or Markwick Corp.'s permanent wire markers.

B. Riser Diagram

Provide a readable riser diagram in a frame with glass cover. Riser shall be mounted where indicated by the Owner's Representative and properly secured to the wall. All Fire Alarm devices shall be clearly indicated on riser diagram.

C. Operating Instructions

Provide a legible set of operating instructions in a frame with a glass cover. Mount in same vicinity as Riser diagram and properly secure to the wall.

2.08 WIRING

A. Power Conductors (Above 75 volts) shall be:

1. Copper, THHN, minimum 600 volts, 90°C and shall be installed in Rigid Galvanized Steel Conduit (RGC).

2. Cable type MI, U.L. listed for 2-hour fire resistance rating.

3. Minimum wire size shall be No. 12 AWG.

B. Low Voltage Conductors (75 volts and less) shall be:

1. Multi-conductor cables shall meet the following requirements:

a. Type FPLP (plenum type), minimum insulation thickness of 15 mils, minimum temperature 150°C.

b. Type FPLP (plenum type) red colored jacket overall with minimum thickness of 25 mils.

c. Cable printing as per UL 1424.

d. Minimum conductor size in a multi-conductor cable shall be No. 14 AWG.

PART 3 - EXECUTION

3.01 INSTALLATION

A. The entire system shall be installed in a neat and workmanlike manner, in accordance with approved manufacturers' wiring diagram. The Contractor shall provide all conduit, wiring, outlet boxes, junction boxes, cabinets and similar devices necessary for the complete installation.

B. All penetrations of floor slabs and fire walls shall be fire stopped in accordance with the 2020 NYS Building Code.

C. End of Line Devices (Resistors/Diodes/Capacitors) shall be provided as directed by the manufacturer and installed to provide proper circuit supervision, as required per NEC. Art. 760.

D. Installation of conductors and raceway shall be in accordance with the following. Refer to Section 260533 for raceway installation requirements:

1. Power conductors shall not be installed in common raceways with low voltage conductors. Power conductors other than M.I. cable shall be run in RGC.

2. Low voltage **c**onductors other than M.I. cable shall be run in EMT or RGC raceway, except as specifically described below.

3. Multi-conductor cables may be installed without raceway protection only in the following locations: above the hung ceiling in a separate cable tray (such as a snake tray) from other low voltage wiring

attached to the building structure (not walls or ceiling assembly), above the hung ceiling utilizing J-Hooks spaced 5'-0" maximum o.c. attached to the building structure (not walls or ceiling assembly), in telephone and communication equipment rooms and closets, and rooms used exclusively for fire alarm system equipment. Refer to Section 260533 for cable tray requirements.

a. J-Hooks shall be of appropriate size for the number of wires. Hooks shall be metal, 1" diameter, from manufacturers such as Erico, B-Line, combination of metal and plastic such as "stiffy" clip, or rounded nylon connected to structure with rods as manufactured by Panduit. Size of hook to be determined based on number of cables in accordance with the manufacturer's guidelines.

4. Telephone lines shall be installed in EMT from the DACT to the Telephone Demarcation point.

5. Raceways run within 8 feet of the finished floor in mechanical rooms or areas where subject to mechanical damage, shall be RGC only.

6. Conductors for other electrical systems shall not be installed in raceways containing fire alarm conductors. Power-limited wiring shall not be run in the same raceways with non-power limited wiring. Fire alarm conductors shall not be installed with other low voltage conductors.

7. Where allowed to be run without EMT or rigid conduit raceway protection, multi-conductor cables shall be installed as follows:

a. Cables shall not depend on ceiling media, pipes, ducts, conduits, or equipment for support. Cables shall be supported independently from the building structure in cable trays.

b. Cables shall be secured by cable ties, straps or similar fittings, so designed and installed as not to damage the cable. Where subject to potential abrasion, provide anti-chafe protection.

c. Cable shall be secured in place at intervals not exceeding 5'-0" on centers and within 12" of every associated cabinet, box or fitting.

8. Installation of raceways, boxes and cabinets shall comply with the following general requirements.

a. Covers of boxes and cabinets shall be painted red and permanently identified as to their use.

b. Penetrations of fire-rated walls, floors or ceilings shall be fire stopped.

c. Raceways or cables shall not penetrate top of any equipment box or cabinet.

9. Splices and terminations of wires and cables shall be as follows:

a. Permitted only in boxes or cabinets specifically approved for the purpose.

b. Utilize mechanical connections specifically approved by UL 486 A & C for the conductors, or if soldered, first joined so as to be mechanically and electrically secure prior to soldering and insulating. Temperature rating of completed splices shall equal or exceed the temperature rating of the highest rated conductor.

10. All wiring shall be color coded throughout and shall be of the type recommended by the manufacturer.

E. Circuits from the fire alarm control panel to the system peripheral equipment shall be a minimum of as follows:

1. Each alarm initiating or supervisory circuit: Two (2) No. 14 AWG conductors.

2. Each alarm signaling/notification appliance circuit: Two (2) No. 14 AWG conductors.

3. Each control circuit: Two (2) No. 14 AWG conductors.

F. Identification, Labeling, Marking

1. Procedure Sign: Install adjacent to FACP and remote annunciator.

2. Zone Locator: Install adjacent to FACP and remote annunciator.

3. Power-Limited Circuits: Mark circuits at terminations, indicating that circuit is a power-limited fire protective signaling circuit.

4. Labeling Circuit Disconnects: Label the device used as the circuit disconnecting means for the dedicated branch circuits serving the system "FIRE ALARM SYSTEM POWER".

5. Identification of Circuits: Identify wires and cables in interconnection cabinets, and FACP with premarked, self-adhesive, wraparound type markers. Designations shall correspond with point-to-point wiring diagrams.

6. Battery Data: Insert a copy of the battery warranty in each battery compartment and mark on batteries the date placed in service.

7. Fire alarm system terminal and junction locations shall be identified in accordance with the NEC/NFPA 70 Art. 760.

8. Terminal and junction boxes shall be painted red.

9. Coordinate with the Owner to obtain Central Monitoring Company sticker indicating the account number and phone number of the monitoring company to place on the FACP.

H. The system shall be arranged to receive power from 120 volt, 60-cycle alternating current supply through a 1p, 20A lockable circuit breaker. All low voltage operation shall be provided from the fire alarm control panel(s).

I. All final connections shall be made under the supervision of a trained technical representative to be provided by the Fire Alarm Company.

J. Do not install smoke detector until the Work (including cleaning) of all trades in the area has been completed. Protect installed smoke detectors from airborne dust and debris with covers provided by the manufacturer for this purpose.

K. The Contractor shall arrange for the sheet metal trades to drill holes in the ductwork for mounting the duct smoke detectors and its sampling tubes. That trade shall perform the actual mounting of these items on and within the ductwork. The duct detectors shall be wired and connected to the Fire Alarm System by the Electrical contractor.

L. Guards

1. Attach guards directly to the surface with vandal resistant fasteners.

2. Where detectors are installed on suspended ceiling provide additional supports in the ceiling, such as channel support system, angel iron or additional runner bars. Fasten the additional supports rigidly to the ceiling runner bar system. Attach frame of resistant fasteners. Install metal spacers between the vandal guard frame and the supports so that the ceiling tiles will not be a part of the support system.

3. Use finishing collar between ceiling and vandal guard where vandal guard cannot be mounted tight against ceiling due to job conditions.

M. Grounding

1. All conduits supplying power to the fire alarm control panel and control cabinets shall contain a green insulated grounding conductor sized in accordance with the NEC/NFPA 70 Art. 760. Ground wiring shall be No. 10 AWG minimum to the service panel and booster cabinets.

2. The Contractor shall connect the grounding conductor to the ground bus or other suitable grounding terminal in each panel and cabinet in which it enters. At the fused disconnect switch supplying the fire alarm system, the contractor shall provide a grounding electrode conductor sized and installed in accordance with the NEC, Table 250.66 (No. 8 AWG minimum). The grounding electrode conductor shall be connected to the service ground bus of the building. Ground connection at water pipe shall be by means of Thomas and Betts 3670 line, Appleton, Crouse-Hinds or other approved ground fitting.

3. When replacing an existing fire alarm system, the Contractor shall securely cover all the new devices being installed until the new Fire Alarm System is completely tested and found free of defects by the Fire Alarm Company Field Advisor. The cover shall be labeled "Not in Use." Once the new fire alarm system is approved by FDNY, the existing FA system is to be labeled "Not in Use" until the existing FA system is completely removed.

N. Access

Provide access for all fire alarm devices and notification appliances. Coordinate with Contractor for access door locations at solid surfaces (gypsum board walls/ceilings, block walls, etc.)

O. Document Storage Box

Install box adjacent to the FACP at a location approved by the Architect.

3.02 <u>TESTS</u>

A. Prior to the final acceptance test, the Contractor and a trained representative of the Fire Alarm Company shall test the completed system for proper operation in the presence of the Owner. The entire system shall be demonstrated to perform all of the functions as below listed in these Specifications. Any system, equipment device or wiring failure discovered during said test shall be repaired or replaced before requesting scheduling of the final acceptance test. All repairs shall be retested in the presence of the Owner prior to the final acceptance test.

B. The Contractor shall obtain and file all necessary forms with the Clarkstown Fire Department for inspections of the newly installed fire alarm system. The Contractor shall submit all required documents to the local authorities having jurisdiction to obtain approval of the newly installed fire alarm system.

C. The Contractor shall perform final acceptance in the presence of the Owner/Owner's Representative, the Inspector from the Clarkstown Fire Department, Contractor's representative and the Fire Alarm Company's representative. Notify the Owner and Owner's Representative at least 5 working days prior to the test so arrangements can be made to have a facility representative witness the test. The Contractor shall then accompany the Fire Department inspector during his/her inspection of the system, make all adjustments required by the inspector and re-file for additional inspections until a non-conditional approval is received from the Fire Department.

D. During the tests indicated above and during the final acceptance test**,** the following shall be conducted in accordance with NFPA 72 – Chapter 14.

1. Every manual fire alarm station shall be tested.

2. Every smoke detector, heat detector and carbon monoxide detector shall be tested using a UL approved method.

3. Every audible notification appliance shall be sounded. Audibility of the notification appliances shall be verified throughout the entire premises for compliance with NFPA 72, using the sound pressure meters set for A-scale.

4. Every visual notification appliance shall be activated. Visibility of the notification appliances shall be verified throughout the entire premises for compliance with NFPA 72.

5. Every system control function shall be tested for its proper operation by activating each type of the initiating device that shall cause such function, including fan shutdown, boiler and gas-fired hot water heater shutdown, electromagnetic door lock release, and Central Station Transmitter operation.

8. All circuits shall be opened at two (2) locations to test for proper supervision.

9. Any and all other tests which the inspector from the Clarkstown Fire Department.

E. If any of the tests fail to indicate proper operation or if the Fire Department inspector issues a list of defects for the system, the Contractor shall immediately correct all defects and improper functioning as part of his Contract obligation. The Contractor shall furnish and install all labor and materials that is necessary to accomplish this. The Contractor shall then reschedule the final acceptance test and redo all tests until the system is accepted by the Fire Department.

F. Upon successful completion of all pre-testing, the Contractor and the Fire Alarm Company shall co-sign certificate attesting to the completion of testing and the updated and completed operational matrix, forward one (1) copy of said certificate to the Owner's Representative and one (1) copy to the Fire Department as part of the inspection scheduling process. The Contractor is responsible for creating the as-built input-output matrix meeting the requirements of NFPA 72 to permit the filing.

G. All final acceptance testing shall be done at a time convenient to the Bureau of Fire Prevention official and the Owner's Representative. All FDNY testing, re-testing and audit costs shall be paid by the Contractor as part of this Contract.

3.03 CLOSEOUT DOCUMENTATION AND TRAINING

A. The following shall be submitted immediately after receiving the Letter of Approval by the Clarkstown Fire Department or installation at the facility to allow legal use of the system.

1. Copies of the Fire Department Letter of Approval.

2. Copies of the updated approved forms from the Fire Department.

3. As required by NFPA 72, the Contractor shall provide three (3) USB Flash Drives and four (4) hard copies of the System Data Base, including all system data files as programmed (as built) and all information to allow alternate authorized Fire Alarm Company to access, modify, alter, add to, or maintain the installed system. Manufacturers that do not comply with this provision of the specification shall not be considered “as equal”.

B. Contractor shall compile and provide to the Owner manuals on the finished system to include: operating and maintenance instructions, manufacturer's catalog pages of all equipment and components, detailed as-built floor plans and riser diagrams showing all installed devices and point-to-point wiring diagrams (this is separate from the Engineer-of-Record “as-built” drawings), and a manufacturer's suggested spare parts list.

C. Contractor shall arrange with the manufacturer to provide Two (2) four-hour training sessions. Both four-hour training sessions shall be conducted during normal business hours to instruct personnel on the operation and maintenance of the entire system, including how to program the fan shut down, by-pass and startup operation. The first shall be conducted after final acceptance; the second shall take place after six (6) months as a retraining course. The Contractor may schedule this session in conjunction with the first semi-annual maintenance as required under this Contract.

D. Contractor shall provide Sensitivity Reports for all smoke detectors.

END OF SECTION

APPENDIX C

CONTRACT DRAWINGS

RENOVATION OF ROCKLAND GREEN ADMINISTRATIVE HEADQUARTERS AND CONSTRUCTION OF AN IMMERSIVE THEATRE EXPERIENCE

172 Main street
Nanuet, NY 10954

OWNER:
Rockland Green
172 Main Street
Nanuet, NY 10954

ARCHITECT:
MICHAEL SHILALE ARCHITECTS, LLP
140 Park Avenue
New City, NY 10956

MEP & Structural Engineer:
Greenman-Pedersen, Inc.
2 Executive Boulevard
Suite 202
Suffern, NY 10901

CIVIL ENGINEER:
ATZL, NASHER, & ZIGLER
234 North Main Street
New City, NY 10956

EXHIBITION DESIGNER:
WHIRLWIND CREATIVE, INC
335 WEST 38TH STREET #5A
NEW YORK, NY 10018

DRAWING No.	DRAWING TITLE	DATE
A-000	COVER SHEET	02-18-25
A-001	LEGENDS, ABBREVIATIONS & NOTES	02-18-25
B-100	BUILDING CODE ANALYSIS	02-18-25
B-101	BUILDING CODE ANALYSIS	02-18-25
B-102	BUILDING CODE ANALYSIS	02-18-25
B-110	FIRST FLOOR EGRESS PLAN	02-18-25
B-111	SECOND FLOOR EGRESS PLAN	02-18-25
S-100	SOLAR PANELS SUPPORTING STEEL FRAMING PLAN	02-18-25
S-300	TYPICAL DETAILS & JOIST REINFORCING DETAILS	02-18-25
		02-18-25
D-101	FIRST FLOOR DEMO PLAN	02-18-25
D-102	SECOND FLOOR DEMO PLAN	02-18-25
D-103	ROOF DEMO PLAN	02-18-25
D-200	BUILDING DEMO ELEVATIONS	02-18-25
A-101	PROPOSED FIRST FLOOR PLAN	02-18-25
A-102	PROPOSED SECOND FLOOR PLAN	02-18-25
A-103	ROOF PLAN	02-18-25
A-200	ELEVATIONS	02-18-25
A-300	BUILDING SECTIONS	02-18-25
A-310	EXTERIOR WALL SECTIONS	02-18-25
A-401	FIRST FLOOR REFLECTED CEILING PLAN	02-18-25
A-402	SECOND FLOOR REFLECTED CEILING PLAN	02-18-25
A-500	EXTERIOR DETAILS	02-18-25
A-530	ROOF DETAILS	02-18-25
A-531	ROOF DETAILS	02-18-25
A-600	FINISH SCHEDULE & PARTITIONS	02-18-25
A-601	PARTITIONS TYPES & DETAILS	02-18-25
A-610	DOOR & HARDWARE SCHEDULE	02-18-25
A-620	BATHROOM ELEVATIONS	02-18-25
A-621	CONFERENCE ROOM ELEVATIONS	02-18-25
A-630	INTERIOR WALL SECTIONS	02-18-25
A-635	INTERIOR DETAILS	02-18-25
FF-701	FIRST FLOOR FURNITURE PLAN	02-18-25
FF-702	SECOND FLOOR FURNITURE PLAN	02-18-25
M-001	MECHANICAL GENERAL NOTES, SYMBOLS. ABBREVIATIONS	02-18-25
M-002	MECHANICAL SCHEDULES – 1	02-18-25
M-003	MECHANICAL SCHEDULES – 2	02-18-25
M-004	MECHANICAL SCHEDULES – 3	02-18-25
MD-101	MECHANICAL FIRST FLOOR PLAN–DEMOLITION	02-18-25
MD-102	MECHANICAL SECOND FLOOR PLAN–DEMOLITION	02-18-25
MD-103	MECHANICAL ROOF PLAN–DEMOLITION	02-18-25
M-101	MECHANICAL FIRST FLOOR PLAN–INSTALLATION	02-18-25
M-102	MECHANICAL SECOND FLOOR PLAN–INSTALLATION	02-18-25
M-103	MECHANICAL ROOF FLOOR PLAN–INSTALLATION	02-18-25
M-201	MECHANICAL FIRST FLOOR DUCTWORK INSTALLATION	02-18-25
M-202	MECHANICAL SECOND FLOOR DUCTWORK INSTALLATION	02-18-25
M-301	VENTILATION RISER DIAGRAM	02-18-25
M-302	PIPING RISER DIAGRAMS	02-18-25
M-401	HEATING PLANT CONTROL DIAGRAM	02-18-25
M-402	DOAS CONTROL DIAGRAM	02-18-25
M-501	MECHANICAL DETAILS–1	02-18-25
M-502	MECHANICAL DETAILS–2	02-18-25
M-503	MECHANICAL DETAILS–3	02-18-25
P-001	PLUMBING GENERAL NOTES	02-18-25
P-002	PLUMBING SITE PLAN	02-18-25
PD-101	PLUMBING FIRST FLOOR DEMOLITION	02-18-25
PD-103	PLUMBING ROOF PLAN–DEMO	02-18-25
P-101	PLUMBING FIRST FLOOR INSTALLATION PLAN	02-18-25
P-102	PLUMBING SECOND FLOOR–INSTALLATION	02-18-25
P-103	PLUMBING ROOF PLAN–INSTALLATION	02-18-25
P-501	DETAILS	02-18-25
P-502	DETAILS	02-18-25
P-503	PLUMBING RISER DIAGRAMS	02-18-25
		02-18-25
E-001	ELECTRICAL GENERAL NOTES & SYMBOLS	02-18-25
ED-101	ELECTRICAL FIRST FLOOR–DEMOLITION	02-18-25
ED-102	ELECTRICAL SECOND FLOOR–DEMOLITION	02-18-25
ED-103	ELECTRICAL ROOF FLOOR–DEMOLITION	02-18-25
E-101	ELECTRICAL FIRST FLOOR–INSTALLATION	02-18-25
E-102	ELECTRICAL SECOND FLOOR–INSTALLATION	02-18-25
E-103	ELECTRICAL ROOF PLAN–INSTALLATION	02-18-25
E-104	ELECTRICAL SITE PLAN	02-18-25
E-111	ELECTRICAL FIRST FLOOR EQUIPMENT–INSTALLATION	02-18-25
E-112	ELECTRICAL SECOND FLOOR EQUIPMENT–INSTALLATION	02-18-25
E-201	ELECTRICAL FIRST FLOOR RCP–INSTALLATION	02-18-25
E-202	ELECTRICAL SECOND FLOOR RCP–INSTALLATION	02-18-25
E-203	ELECTRICAL LIGHTING CONTROLS	02-18-25
E-204	ELECTRICAL AV CONTROLS	02-18-25
E-301	ELECTRICAL POWER RISER	02-18-25
E-302	ELECTRICAL SYSTEMS PARTIAL RISERS	02-18-25
E-401	ELECTRICAL PANEL SCHEDULES	02-18-25
E-402	ELECTRICAL PANEL SCHEDULES	02-18-25
E-501	ELECTRICAL DETAIL SHEET NO. 1	
		02-18-25
FA-001	FIRE ALARM GENERAL NOTES	02-18-25
FA-002	FIRE ALARM RISER AND IO MATRIX	02-18-25
FA-101	FIRE ALARM FIRST FLOOR–INSTALLATION	02-18-25
FA-102	FIRE ALARM SECOND FLOOR–INSTALLATION	

LIST OF DRAWINGS

0 1/2 1
IF THIS BAR DOES NOT MEASURE 1, THEN DRAWING IS NOT TO FULL SCALE

No.	Date	Revisions
0	02-18-25	RFP SET

IT IS A VIOLATION OF THE LAW FOR ANY PERSON, UNLESS ACTING UNDER THE DIRECTION OF A LICENSED ARCHITECT, TO ALTER AN ITEM IN ANY WAY.

Drawn by MAL/JR
Checked by MS/JC
Project No. 40034G
Scale AS NOTED
Date 03-20-23

Mechanical, Electrical & Structural Engineer: GREENMAN PEDERSEN, INC
2 EXECUTIVE BOULEVARD
SUITE 202
SUFFERN, NY 10901

Civil Engineer: ATZL, NASHER, & ZIGLER
234 North Main Street
New City, NY 10956

RENOVATION OF ROCKLAND GREEN ADMINISTRATIVE HEADQUARTERS AND CONSTRUCTION OF AN IMMERSIVE THEATRE EXPERIENCE
172 MAIN STREET
NANUET, NY 10954
TOWN OF CLARKSTOWN
COUNTY OF ROCKLAND

MICHAEL SHILALE ARCHITECTS, L.L.P.
140 Park Avenue New City, NY 10956 Tel 845-708-9200
www.shilale.com

© COPYRIGHT, MICHAEL SHILALE ARCHITECTS LLP, ALL RIGHTS RESERVED.

Drawing Title
COVER SHEET

Drawing No.
A-000

ACT	ACOUSTICAL CEILING TILE
A.F.F.	ABOVE FINISH FLOOR
ASPH	ASPHALT
BLK	BLOCK
BLK'G	BLOCKING
BUR	BUILT UP ROOFING
CLG	CEILING
CONC	CONCRETE
CONT	CONTINUOUS
C.J.	CONTROL JOINT
DN	DOWN
DIA	DIAMETER
DWG	DRAWING
E.F.	EACH FACE
EIFS	EXTERIOR INSULATION AND FINISH SYSTEM
E.W.	EACH WAY
E.W.C.	ELECTRICAL WATER COOLER
EL	ELEVATION
ELC	ELECTRICAL CONTRACTOR
EXIST	EXISTING
EXP	EXPANSION
EXT'G	EXISTING
EXTR	EXTERIOR
FP	FIREPROOF
FIN.	FINISH(ED)
GA	GAUGE
GC	GENERAL CONTRACTOR
GALV	GALVANIZED
GL	GLASS
GWB	GYPSUM WALL BOARD
HM	HOLLOW METAL
H.P.	HIGH POINT
HAC	HEATING & A/C CONTRACTOR
ITR	INDIVIDUAL TREATMENT ROOM
JT	JOINT
LAM	LAMINATE
LAV	LAVATORY
LP	LOW POINT
MAX	MAXIMUM
MFR	MANUFACTURER
MTL	METAL
MIN	MINIMUM
MO	MASONRY OPENING
N.I.C.	NOT IN CONTRACT
NO.	NUMBER
OC	ON CENTER
OPN'G	OPENING
PBC	PLUMBING CONTRACTOR
PLAS.LAM.	PLASTIC LAMINATE
PL	PLATE
PLY'D	PLYWOOD
RAD	RADIUS
REF.CLG.	REFLECTED CEILING
REQ'D	REQUIRED
RO	ROUGH OPENING
SIM	SIMILAR
STL	STEEL
SUSP.CLG.	SUSPENDED CEILING
T.O.M.	TOP OF MASONRY
T.O.S.	TOP OF STEEL
TYP	TYPICAL
U.O.N.	UNLESS OTHERWISE NOTED
V.I.F.	VERIFY IN FIELD
VCT	VINYL COMPOSITE TILE
W/	WITH
WD	WOOD

ABBREVIATIONS

DOOR NUMBER

KEY NOTE

PARTITION TYPE

REVISION NUMBER

WINDOW TYPE

MECHANICAL EQUIPMENT

EXISTING PARTITION

EXISTING PARTITION TO BE REMOVED

NEW PARTITION (SEE PARTITION LEGEND A-101)

NEW DOOR

EXISTING DOOR

EXISTING DOOR TO BE REMOVED

EXISTING WINDOW

NEW WINDOW

OCCUPANCY GROUP
NET AREA S.F.
ROOM NAME
ROOM NUMBER
ROOM NAME/ NUMBER IDENTIFICATION
NET FLOOR AREA PER PERSON
OCCUPANT LOAD

1 A-100
DRAWING NUMBER
WALL SECTION/ ELEVATION REFERENCE
SHEET NUMBER

1 A-100
DETAIL NUMBER
DETAIL REFERENCE
SHEET NUMBER

COLUMN LINE DESIGNATION

SYMBOLS LEGEND

1. ALL PLAN DIMENSIONS ARE NOMINAL U.O.N. DIMENSIONS TO THE FINISHED FACE OF AN ELEMENT OR WALL WILL BE DESIGNATED WITH AN "F" AS SHOWN.

2. G.C. TO VERIFY ALL DIMENSIONS IN THE FIELD AND IS TO NOTIFY ARCHITECT IF THERE ARE ANY DISCREPANCIES

0 1/2 1
IF THIS BAR DOES NOT MEASURE 1" THEN DRAWING IS NOT TO FULL SCALE

GENERAL NOTES

CONCRETE MASONRY UNIT

BRICK

RIGID INSULATION

CONCRETE

GRAVEL OR STONE

EARTH

EIFS

ASPHALT PAVING

SAND/MORTAR/GYPSUM BOARD

STEEL

ACT

ROUGH WOOD

BRONZE

MATERIALS LEGEND

UNIT PRICE NO. 1: PROVIDE A PRICE TO ADD OR REMOVE 20 SF OF EXISTING ROOF DECKING. (TO MODIFY ALLOWANCE NO.1)

UNIT PRICE NO. 2: PROVIDE A PRICE TO ADD OR REMOVE 20 LF OF MASONRY REPOINTING. (TO MODIFY ALLOWANCE NO.2)

UNIT PRICE NO. 3: PROVIDE A PRICE TO ADD OR REMOVE 20 SF OF MASONRY REPAIR. (TO MODIFY ALLOWANCE NO.3)

UNIT PRICES

ALT. NO. 1: VOID.

ALT. NO. 2: 100 SF OF MASONRY REPOINTING.

ALT. NO. 3: PROVIDE GLASS WALLS AND DOORS WITH OBSCURE GLASS AT SECOND FLOOR CONFERENCE ROOM.

ALT. NO. 4: PROVIDE ROOF BALLASTED SOLAR PANEL SYSTEM.

ALTERNATES

ALLOW. NO. 1: QUANTITY ALLOWANCE: DECK REPLACEMENT: INCLUDE 200 SF OF ROOF DECK REPLACEMENT.

ALLOW. NO. 2: QUANTITY ALLOWANCE: MASONRY REPOINTING: INCLUDE 200 LF OF REPOINTING AS SPECIFIED IN SECTION 04120.64 "BRICK MASONRY REPOINTING".

ALLOW. NO. 3: QUANTITY ALLOWANCE: MASONRY REPAIR: INCLUDE 200 SF OF REPAIR AS SPECIFIED IN SECTION 04120.63 "BRICK MASONRY REPAIR".

ALLOW. NO. 4: LUMP-SUM ALLOWANCE: CONTRACTOR SHALL INCLUDE THE SUM OF $15,000 TO PROVIDE AND INSTALL NEW KITCHENETTE CABINETS AND COUNTERTOP

ALLOWANCES

© COPYRIGHT, MICHAEL SHILALE ARCHITECTS LLP, ALL RIGHTS RESERVED.

IT IS A VIOLATION OF THE LAW FOR ANY PERSON, UNLESS ACTING UNDER THE DIRECTION OF A LICENSED ARCHITECT, TO ALTER AN ITEM IN ANY WAY.

No.	Date	Revisions
0	02-18-25	RFP SET

Drawn by MAL/JR
Checked by MS/JC
Project No. 40034G
Scale AS NOTED
Date 03-20-23

Mechanical, Electrical & Structural Engineer: GREENMAN PEDERSEN, INC
2 EXECUTIVE BOULEVARD
SUITE 202
SUFFERN, NY 10901

Civil Engineer: ATZL,NASHER,& ZIGLER
234 North Main Street
New City, NY 10956

RENOVATION OF ROCKLAND GREEN ADMINISTRATIVE HEADQUARTERS AND CONSTRUCTION OF AN IMMERSIVE THEATRE EXPERIENCE

172 MAIN STREET
NANUET, NY 10954

TOWN OF CLARKSTOWN
COUNTY OF ROCKLAND

MSA
MICHAEL SHILALE ARCHITECTS, L.L.P.
140 Park Avenue New City, NY 10956 Tel 845-708-9200
www.msa-llp.com

Drawing Title
LEGENDS ABBREVIATIONS & NOTES

Drawing No.
A-001

2020 EXISTING BUILDING CODE OF NEW YORK STATE

Owner:	Rockland Green	Date:	4/8/2024
Project Name:	Rockland Green Alterations	County	Rockland
Project Number:	40034G	Architect of Record	MSA
Project Address:	172 Main St. Nanuet, NY 10954		

2020	Existing Building Code of New York State
2020	Building Code of New York State

WORK AREA	That portion or portions of a building consisting of all reconfigured spaces as indicated on the construction documents. Work area excludes other portions of the building where incidental work entailed by the intended work must be performed and portions of the building where work not initially intended by the owner is specifically required by this code.
SECTION 301	ADMINISTRATION
301.1 General	The repair, alteration, change of occupancy, addition or relocation of all existing buildings shall comply with Section 301.2, 301.3, or 301.4.
301.3 Alteration, Addition, or Change of Occupancy	The alteration, addition or change of occupancy of all existing buildings shall comply with one of the methods listed in Section 301.3.1, 301.3.2 or 301.3.3 as selected by the applicant. Sections 301.3.1 through 301.3.3 shall not be applied in combination with each other. Exception: Subject to the approval of the building official, alterations complying with the laws in existence at the time the building or the affected portion of the building was built shall be considered in compliance with the provisions of this code. New structural members added as part of the alteration shall comply with the Building Code of New York State. This exception shall not apply to alterations that constitute substantial improvement in flood hazard areas, which shall comply with Section 503.2, 701.3 or 1301.3.3. This exception shall not apply to the structural provisions of Chapter 5 or to the structural provisions of Sections 706, 806 and 906.
301.3.2 Work Area Compliance Method	Alterations, additions and changes of occupancy complying with the applicable requirements of Chapters 6 through 12 of this code shall be considered in compliance with the provisions of this code.
301.5 Compliance with Accessibility	Accessibility requirements for existing buildings shall comply with the 2009 edition of ICC A117.1.
SECTION 302	GENERAL PROVISIONS
302.4 Existing Materials	Materials already in use in a building in compliance with requirements or approvals in effect at the time of their erection or installation shall be permitted to remain in use unless determined by the building official to be unsafe.
SECTION 305	ACCESSIBILITY FOR EXISTING BUILDINGS
305.4 Change of Occupancy	Existing buildings that undergo a change of group or occupancy shall comply with this section. Exception: Type B dwelling or sleeping units required by Section 1107 of the Building Code of New York State are not required to be provided in existing buildings and facilities undergoing a change of occupancy in conjunction with alterations where the work area is 50 percent or less of the aggregate area of the building.
305.4.1 Partial Change of Occupancy	Where a portion of the building is changed to a new occupancy classification, any alterations shall comply with Sections 305.6, 305.7 and 305.8.
305.7 Alterations Affecting and Area Containing a Primary Function	Where an alteration affects the accessibility to, or contains an area of primary function, the route to the primary function area shall be accessible. The accessible route to the primary function area shall include toilet facilities and drinking fountains serving the area of primary function. Exceptions: 1. The costs of providing the accessible route are not required to exceed 20 percent of the costs of the alterations affecting the area of primary function. 2. This provision does not apply to alterations limited solely to windows, hardware, operating controls, electrical outlets and signs. 3. This provision does not apply to alterations limited solely to mechanical systems, electrical systems, installation or alteration of fire protection systems and abatement of hazardous materials. 4. This provision does not apply to alterations undertaken for the primary purpose of increasing the accessibility of a facility. 5. This provision does not apply to altered areas limited to Type B dwelling and sleeping units.
SECTION 503	ALTERATIONS
503.1 General	Except as provided by Section 302.4, 302.5 or this section, alterations to any building or structure shall comply with the requirements of the Building Code of New York State for new construction. Alterations shall be such that the existing building or structure is not less complying with the provisions of the Building Code of New York State than the existing building or structure was prior to the alteration.
SECTION 601	GENERAL
601.2 Work area.	The work area, as defined in Chapter 2, shall be identified on the construction documents.
SECTION 604	ALTERATION - LEVEL 3
604.1 Scope	Level 3 Alterations where the work area exceeds 50 percent of the building area
604.2 Application	Level 3 alterations shall comply with the provisions of Chapter 7 and 8 for Level 1 and 2 alterations, respectively, as well as the provisions of Chapter 9.

EXISTING BUILDING CODE

SECTION 701	GENERAL
701.1 Scope	Level 1 alterations as described in Section 602 shall comply with the requirements of this chapter. Level 1 alterations to historic buildings shall comply with this chapter, except as modified in Chapter 12.
SECTION 801	GENERAL
801.1 Scope	Level 2 alterations as described in Section 603 shall comply with the requirements of this chapter. Exception: Buildings in which the reconfiguration is exclusively the result of compliance with the accessibility requirements of Section 305.7 shall be permitted to comply with Chapter 7.
801.2 Alteration Level 1 Compliance	In addition to the requirements of this chapter, all work shall comply with the requirements of Chapter 7.
801.3 Compliance	New construction elements, components, systems, and spaces shall comply with the requirements of the Building Code of New York State. Exceptions: 1. Where windows are added they are not required to comply with the light and ventilation requirements of the Building Code of New York State. 2. Newly installed electrical equipment shall comply with the requirements of Section 807. 3. The length of dead-end corridors in newly constructed spaces shall only be required to comply with the provisions of Section 805.6. 4. The minimum ceiling height of the newly created habitable and occupiable spaces and corridors shall be 7 feet (2134 mm). 5. Where provided in below-grade transportation stations, existing and new escalators shall be permitted to have a clear width of less than 32 inches (813 mm). 6. New structural members and connections shall be permitted to comply with alternative design criteria in accordance with Section 302.
SECTION 802	BUILDING ELEMENTS AND MATERIALS
802.1 Scope	The requirements of this section are limited to work areas in which Level 2 alterations are being performed and shall apply beyond the work area where
802.2 Vertical Openings	Existing vertical openings shall comply with the provisions of Sections 802.2.1, 802.2.2 and 802.2.3.
802.2.1 Existing Vertical Openings	All existing interior vertical openings connecting two or more floors shall be enclosed with approved assemblies having a fire-resistance rating of not less than 1 hour with approved opening protectives. Exceptions: 4. In Group A occupancies, a minimum 30-minute enclosure shall be provided to protect all vertical openings not exceeding three stories.
SECTION 803	FIRE PROTECTION
803.1 Scope	The requirements of this section shall be limited to work areas in which Level 2 alterations are being performed, and where specified they shall apply throughout the floor on which the work areas are located or otherwise beyond the work area.
803.2 Automatic Sprinkler Systems	Automatic sprinkler systems shall be provided in accordance with the requirements of Sections 803.2.1 through 803.2.4. Installation requirements shall be in accordance with the Building Code of New York State.
803.2.2 Groups A/B	In buildings with occupancies in Groups A, B, E, F-1, H, I, M, R-1, R-2, R-4, S-1 and S-2, work areas that have exits or corridors shared by more than one tenant or that have exits or corridors serving an occupant load greater than 30 shall be provided with automatic sprinkler protection where both of the following conditions occur: 1. The work area is required to be provided with automatic sprinkler protection in accordance with the Building Code of New York State as applicable to new construction. 2. The work area exceeds 50 percent of the floor area.
SECTION 805	MEANS OF EGRESS
805.1 Scope	The requirements of this section shall be limited to work areas that include exits or corridors shared by more than one tenant within the work area in which Level 2 alterations are being performed, and where specified they shall apply throughout the floor on which the work areas are located or otherwise beyond the work area.
805.2 General	The means of egress shall comply with the requirements of this section. Exceptions: 1. Where the work area and the means of egress serving it complies with NFPA 101. 2. Means of egress complying with the requirements of the building code under which the building was constructed shall be considered to be compliant means of egress if, in the opinion of the building official, they do not constitute a distinct
805.3 Number of Exits	The number of exits shall be in accordance with Sections 805.3.1 through 805.3.3.
805.3.1 Minimum Number	Every story utilized for human occupancy on which there is a work area that includes exits or corridors shared by more than one tenant within the work area shall be provided with the minimum number of exits based on the occupancy and the occupant load in accordance with the Building Code of New York State. In addition, the exits shall comply with Sections 805.3.1.1 and 805.3.1.2.
805.4 Egress Doorways	Egress doorways in any work area shall comply with Sections 805.4.1 through 805.4.5.
805.4.1 Two Egress Doorways	Work areas shall be provided with two egress doorways in accordance with the requirements of Sections 805.4.1.1 and 805.4.1.2.
805.4.1.1 Occupant Load and Travel Distance	In any work area, all rooms and spaces having an occupant load greater than 50 or in which the travel distance to an exit exceeds 75 feet (22 860 mm) shall have a minimum of two egress doorways.
SECTION 809	PLUMBING
809.1 Minimum Fixtures	Where the occupant load of the story is increased by more than 20 percent, plumbing fixtures for the story shall be provided in quantities specified in the International Plumbing Code based on the increased occupant load.

EXISTING BUILDING CODE

EXISTING BUILDING CODE: CHAPTER 10 CHANGE OF OCCUPANCY	
SECTION 1011	CHANGE OF OCCUPANCY CLASSIFICATION
1011.1 General	The provisions of this section shall apply to buildings or portions thereof undergoing a change of occupancy classification. This includes a change of occupancy classification within a group as well as a change of occupancy classification from one group to a different group or where there is a change of occupancy within a space where there is a different fire protection system threshold requirement in Chapter 9 of the Building Code of New York State. Such buildings shall also comply with Sections 1002 through 1010 of this code. The application of requirements for the change of occupancy shall be as set forth in Sections 1011.1.1 through 1011.1.3. A change of occupancy, as defined in Section 202, without a corresponding change of occupancy classification shall comply with Section 1001.2.
1011.1.1 Compliance with Chapter 9	The requirements of Chapter 9 shall be applicable throughout the building for the new occupancy classification based on the separation conditions set forth in Sections 1011.1.1.1 and 1011.1.1.2.
1011.1.1.2 Change of Occupancy Classification with Separation	Where a portion of an existing building is changed to a new occupancy classification or where there is a change of occupancy within a space where there is a different fire protection system threshold requirement in Chapter 9 of the Building Code of New York State, and that portion is separated from the remainder of the building with fire barriers having a fire-resistance rating as required in the Building Code of New York State for the separate occupancy, that portion shall comply with all of the requirements of Chapter 9 of this code for the new occupancy classification and with the requirements of this chapter.
1011.1.2 Fire Protection System	Fire protection systems shall be provided in accordance with Sections 1011.2.1 and 1011.2.2.
1011.2.1 Fire Sprinkler System	Where a change in occupancy classification occurs or where there is a change of occupancy within a space where there is a different fire protection system threshold requirement in Chapter 9 of the Building Code of New York State that requires an automatic fire sprinkler system to be provided based on the new occupancy in accordance with Chapter 9 of the Building Code of New York State, such system shall be provided throughout the area where the change of occupancy occurs.

EXISTING BUILDING CODE

2020 NEW YORK STATE BUILDING CODE

BUILDING CODE SUMMARY

Owner:	Rockland Green	Date:	4/30/2020
Project Name:	Rockland Green Alterations	County	Rockland
Project Number:	40034G	Architect of Record	MSA
Project Address:	172 Main St, Nanuet, NY 10954		

APPLICABLE ORDINANCES, CODES & STANDARD

Building Code	New York State Building Code - 2020
Fire/Life Safety	
Accessible Code	ICC/ANSI A117.1 -03
Energy Code	New York State Energy Conservation Code -2020
Plumbing Code	
Electric Code	
Mechanical	

CHAPTER 2: DEFINITIONS

Section 202	DEFINITIONS
FIRE PARTITION	A vertical assembly of materials designed to restrict the spread of fire in which openings are protected.

CHAPTER 3: USE AND OCCUPANCY

Section 303	ASSEMBLY GROUP A
303.2 Assembly Group A-1	Group A-1 occupancy includes assembly uses, usually with fixed seating, intended for the production and viewing of the performing arts or motion pictures including, but not limited to: Motion picture theaters, Symphony and concert halls, Television and radio studios admitting an audience, Theaters
303.4 Assembly Group A-3	Group A-3 occ. Includes assembly intended for worship,recreation or amusement and other assembly uses not classified elsewhere in Group A, not limited to: Amusement Arcades, Art Galleries, Community Halls, Exhibition Halls,lecture halls, libraries, museums, etc.
Section 304	BUISNESS GROUP B
304.1 Buisness Group B	Business Group B occupancy includes, among others, the use of a building or structure, or a portion thereof, for office, professional or service-type transactions, including storage of records and accounts. Business occupancies shall include, but not be limited to, the following: Airport traffic control towers, Ambulatory care facilities, Animal hospitals, kennels and pounds, Banks, Barber and beauty shops, Car wash, Civic administration, Clinic, outpatient, Dry cleaning and laundries: pick-up and delivery stations and self-service, Educational occupancies for students above the 12th grade, Electronic data processing, Food processing establishments and commercial kitchens not associated with restaurants, cafeterias and similar dining facilities not more than 2,500 square feet (232 m2) in area. Laboratories: testing and research, Motor vehicle showrooms, Post offices, Print shops, Professional services (architects, attorneys, dentists, physicians, engineers, etc.), Radio and television stations, Telephone exchanges, Training and skill development not in a school or academic program (this shall include, but not be limited to, tutoring centers, martial arts studios, gymnastics and similar uses regardless of the ages served, and where not classified as a Group A occupancy)

Code Reference	Primary Uses	Group	
Section 304.1	Business Use	B	
Section 303.1	Assembly Use	A	

CHAPTER 5 GENERAL BUILDING HEIGHTS AND AREAS

Section 504	BUILDING HEIGHT AND NUMBER OF STORIES				
Table 504.3 Allowable Height	Occupancy	Sprinkler	Type of const	Allowable	Existing:
	B	NS	IIB	55	35
	A	NS	IIB	55	35
Table 504.4 Allowable # of Stories	Occupancy	Sprinkler	Type of const	Allowable	Existing:
	B	NS	IIB	3	2
	A	NS	IIB	2	2
Section 506	BUILDING AREA				
Table 506.2 Allowable Area	Occupancy	Sprinkler	Type of const	Allowable Area Factor	Existing Area Factor
	B	NS	IIB	23,000	4,519
	A	NS	IIB	9,500	553
	Equation 5-1 Aa=At+(NSxIf) or Equation 5-2				
506.3	Frontage Increase			Not Used	

NYS BUILDING CODE

IT IS A VIOLATION OF THE LAW FOR ANY PERSON, UNLESS ACTING UNDER THE DIRECTION OF A LICENSED ARCHITECT, TO ALTER AN ITEM IN ANY WAY.

No.	Date	Revisions
0	02-18-25	RFP SET

Drawn by MAL
Checked by MS/JC
Project No. 40034G
Scale AS NOTED
Date 03-20-23

Mechanical, Electrical & Structural Engineer: GREENMAN PEDERSEN, INC 2 EXECUTIVE BOULEVARD SUFFERN, NY 10901

Civil Engineer: ATZL,NASHER,& ZIGLER 234 North Main Street New City, NY 10956

RENOVATION OF ROCKLAND GREEN ADMINISTRATIVE HEADQUARTERS AND CONSTRUCTION OF AN IMMERSIVE THEATRE EXPERIENCE

172 MAIN STREET NANUET, NY 10954

TOWN OF CLARKSTOWN COUNTY OF ROCKLAND

MICHAEL SHILALE ARCHITECTS, L.L.P.
140 Park Avenue New City, NY 10956 Tel 845-708-9200
www.shilale.com

© COPYRIGHT, MICHAEL SHILALE ARCHITECTS, ALL RIGHTS RESERVED.

Drawing Title
BUILDING CODE ANAYLSIS

Drawing No.
B-100

Section 508	MIXED USE AND OCCUPANCY			
508.2 Accessory Occupancies	Accessory occupancies are those occupancies that are ancillary to the main occupancy of the building or portion thereof. Accessory occupancies shall comply with the provisions of Sections 508.2.1 through 508.2.4.			
508.2.3 Allowable Building Area	The allowable area of the building shall be based on the applicable provisions of Section 506 for the main occupancy of the building. Aggregate accessory occupancies shall not occupy more than 10 percent of the floor area of the story in which they are located and shall not exceed the tabular values for nonsprinklered buildings in Table 506.2 for each such accessory occupancy.			
	Total Gross SF of Story	Occ.	Aggregate Accessory Occupancy Area	Percentage of Accessory Area to Total Area
	4272	A-1	553	12.94%
	4272	A-3	1147	26.85%
508.2.4 Separation of Occupancies	No Separation is required between accessory occupancies and the main occupancy: Exceptions 1. group H-2, H-3 and H-5 Occupancies shall be seperated from all other occupancies in accordance with section 508.4 Exceptions 2. Group I-1, R-1, R-2 and R-3 dwelling units and sleeping units shall be separated from other dwelling or sleeping units and from acessory occupancies contiguous to them in accordance with the requirements of Section 420			
508.4 Separated Occupancies	Buildings or portions of buildings that comply with the provisions of this section shall be considered as separated occupancies.			
TABLE 508.4 REQUIRED SEPARATION OF OCCUPANCIES	Occupancies	Sprinkler	Separation Required	
	A-B	NS	2 hr	

CHAPTER 6 TYPES OF CONSTRUCTION			
Section 601	**Construction Classification IIB**		
Table 601	Fire Resistance Rating Requirements for Building Elements		
	Building Element	Req'd Rating	Remarks
	Stuctural Frame	0	
	Bearing Walls Exterior	0	
	Bearing Walls Interior	0	
	Non Bearing Exterior Walls and Partitions	See Table 602	
	Non Bearing Interior Walls and Partitions	0	
	Floor Construction-incl beams and joists	0	
	Roof Construction-incl beams and joists	0	
Table 602	Fire Resistance Rating Requirements for Exterior Walls based on Fire Separations		
	Fire Separation Distance	Occupancy	Req'd Rating
	x<5	A,B	1
	5<X<10	A,B	1
	10≤X<30	A,B	0
	x>30	A,B	0
CHAPTER 7 FIRE AND SMOKE PROTECTION FEATURES			
Section 705	EXTERIOR WALLS		
Table 705.2 Minimum Distance of Projection	FIRE SEPARATION DISTANCE (FSD)	MINIMUM DISTANCE FROM LINE USED TO DETERMINE FSD	
	O feet to 2 feet	Projections not permitted	
	Greater than 2 feet to 3 feet	24 inches	
	Greater than 3 feet to less than 30 feet	24 inches plus 8 inches for every foot of FSD beyond 3 feet or fraction thereof	
	30 feet or greater	20 feet	
Table 705.8 Maximum Area of Exterior Wall Openings on Fire Separation Distance and Degree of Opening Protection See Exceptions	Maximum Area of Exterior Wall Opening	Fire Separation Distance	Max % Allowed/Provided
	Unprotected, Nonsprinklered (UP,NS)	0 to <3	Not Permitted
	Unprotected, Sprinklered (UP,S)	0 to <3	Not Permitted
	Protected (P)	0 to <3	Not Permitted
	Unprotected, Nonsprinklered (UP,NS)	3 to <5	Not Permitted
	Unprotected, Sprinklered (UP,S)	3 to <5	15%
	Protected (P)	3 to <5	15%
	Unprotected, Nonsprinklered (UP,NS)	5 to <10	10%
	Unprotected, Sprinklered (UP,S)	5 to <10	25%
	Protected (P)	5 to <10	25%
	Unprotected, Nonsprinklered (UP,NS)	10 to <15	15%
	Unprotected, Sprinklered (UP,S)	10 to <15	45%
	Protected (P)	10 to <15	45%
	Unprotected, Nonsprinklered (UP,NS)	15 to < 20	25%
	Unprotected, Sprinklered (UP,S)	15 to < 20	75%
	Protected (P)	15 to < 20	75%
	Unprotected, Nonsprinklered (UP,NS)	20 to <25	45%
	Unprotected, Sprinklered (UP,S)	20 to <25	No Limit
	Protected (P)	20 to <25	No Limit
	Unprotected, Nonsprinklered (UP,NS)	25 to <30	70%
	Unprotected, Sprinklered (UP,S)	25 to <30	No Limit
	Protected (P)	25 to <30	No Limit
	Unprotected, Nonsprinklered (UP,NS)	30 or greater	No Limit
	Unprotected, Sprinklered (UP,S)	30 or greater	No Limit
	Protected (P)	30 or greater	No Limit

NYS BUILDING CODE

Table 706.4 Fire Wall Fire-Resistance Ratings	Fire Wall Fire-Resistance Rating (hours)		
	Group	Fire-Resistance Rating	
	B,A	3a	
	a: In Type II or V construction, walls shall be permitted to have a 2-hour fire-resistance rating.		
Exceptions:1. Fire walls shall be permitted to terminate at the interior surface of combustible exterior sheathing or	Fire walls shall be continuous from exterior wall to exterior wall and shall extend at least 18 inches (457 mm) beyond the exterior surface of exterior walls.		
	Exceptions:1. Fire walls shall be permitted to terminate at the interior surface of combustible exterior sheathing or siding provided the exterior wall has a fire-resistance rating of at least 1 hour for a horizontal distance of at least 4 feet (1220 mm) on both sides of the fire wall. Openings within such exterior walls shall be protected by opening protectives having a fire protection rating of not less than 3/4 hour.		
706.5.1 Exterior Walls	Where the fire wall intersects the exterior walls, the fire-resistance rating for the exteror walls on both sides of the fire wall shall have a 1 hour fire-resistance rating with 3/4 hour opening protection where opening protections is required. The fire-resistant rating of the exterior shall extend a minimum of 4 feet on each side of the intersection of the fire wall to exterior wall.		
706.6 Vertical continuity	Fire walls shall extend from the foundation to a termination point at least 30 inches (762 mm) above both adjacent roofs.		
	Exceptions: 2. Two-hour fire-resistance-rated walls shall be permitted to terminate at the underside of the roof sheathing, deck or slab provided:		
	2.1. The lower roof assembly within 4 feet (1220 mm) of the wall has not less than a 1-hour fire-resistance rating and the entire length and span of supporting elements for the rated roof assembly has a fire-resistance rating of not less than 1 hour.		
	2.2. Openings in the roof shall not be located within 4 feet (1220 mm) of the fire wall.		
	2.3. Each building shall be provided with not less than a Class B roof covering.		
Section 707	FIRE BARRIERS		
Section 708	FIRE PARTITIONS		
708.1.3 General	3. Corridor walls as required by Section 1020.1.		
708.3 Fire Resistance Rating	Fire partitions shall have a fire-resistance rating of not less than 1 hour.		
708.4 Continuity	Fire partitions shall extend from the top of the foundation or floor/ceiling assembly below and be securely attached to one of the following: 1. The underside of the floor or roof sheathing, deck or slab above. 2. The underside of a floor/ceiling or roof/ceiling assembly having a fire-resistance rating that is not less than the fire-resistance rating of the fire partition.		
Section 709	SMOKE BARRIERS		
Section 710	SMOKE PARTITIONS		

Section 712	VERTICAL OPENINGS		
712.1.12 Exit access stairways and ramps. Vertical openings containing exit access stairways or ramps in accordance with Section 1019 shall be permitted.			
Section 716	OPENING PROTECTIVES		
Table 716.1	Fire Door and Fire Shutter Fire Protection Rating (hours)		
	Type of Assembly	Req'Ass	Min Door/Shutter
	Fire Barriers having a req'd fire-resistance rating of 1 hour: Shaft, exit enclosures, exit passageways	1	1
	Other Fire Barriers	1	3/4
Table 716.1	Fire Window Assembly Fire Protection Ratings (hours)		
	Type of Assembly	Req'Ass	Min Fire Window
	Interior Walls		
	Fire Barriers	>1	NP (except per 716.2)
	Other Fire Barriers	1	3/4
CHAPTER 9: FIRE PROTECTION AND LIFE SAFETY SYSTEMS			
Section 903	AUTOMATIC SPRINKLER SYSTEMS		
	Business Use	Not Required	
902.2.1 Group A	An automatic sprinkler system shall be provided throughout buildings and portions thereof used as Group A occupancies as provided in this section.		
903.2.1.1 Group A-1	An automatic sprinkler system shall be provided throughout stories containing Group A-1 occupancies and throughout all stories from the Group A-1 occupancy to and including the levels of exit discharge serving that occupancy where one of the following conditions exists: 1. The fire area exceeds 12,000 square feet (1115 m2). 2. The fire area has an occupant load of 300 or more. 3. The fire area is located on a floor other than a level of exit discharge serving such occupancies. 4. The fire area contains a multitheater complex.		
903.2.3 Group A3	An automatic sprinkler system shall be provided throughout stories containing Group A3 occupancies and throughout all stories from the group A-3 occupancy to and including the levels of exit discharge serving that occupancy where one of the following condition exists: 1. The Fire areas exceeds 12,000 square feet (1115 m2) in area. 2. The area has an occupant load of 300 or more. 3. Thefire area is located on a floor other than a level of exit discharge serving such occupancies.		

Section 906	PORTABLE FIRE EXTINGUISHERS	As required by the Fire Code of New York State	
906.1 Where required.	Portable fire extinguishers shall be installed in all of the following locations: 1. In Group A, B, E, F, H, I, M, R-1, R-2, R-4 and S occupancies.		
Section 907	FIRE ALARM & DETECTION SYSTEMS		
[F] 907.2.2 Group B.	A manual fire alarm system shall be installed in Group B occupancies where one of the following conditions exists: 1. The combined Group B occupant load of all floors is 500 or more. 2. The Group B occupant load is more than 100 persons above or below the lowest level of exit discharge. 3. The fire area contains an ambulatory care facility.		
CHAPTER 10: MEANS OF EGRESS			
Section 1003	GENERAL MEANS OF EGRESS		
Section 1004	OCCUPANT LOAD		
Table 1004.5	**Max Floor Area Allowance per Occupant Proposed**		
	Function of Space	Area in Sq Ft	Occupany Load Factor	Total Occupants
1st floor B	Buisness	553	150	8
1st floor A-1	Assembly	1172	15	37
1st floor A-3	Assembly	1147	30	38
			Total First Floor	83
2st floor B	Buisness	3347	150	48
			Total Second Floor	48
			Total Building Occupants	**131**
1004.6 Fixed Seating	For areas having fixed seats and aisles, the occupant load shall be determined by the number of fixed seats installed therein. The occupant load for areas in which fixed seating is not installed, such as waiting spaces, shall be determined in accordance with Section 1004.5 and added to the number of fixed seats. The occupant load of wheelchair spaces and the associated companion seat shall be based on one occupant for each wheelchair space and one occupant for the associated companion seat provided in accordance with Section 1108.2.3. For areas having fixed seating without dividing arms, the occupant load shall be not less than the number of seats based on one person for each 18 inches (457 mm) of seating length. The occupant load of seating booths shall be based on one person for each 24 inches (610 mm) of booth seat length measured at the backrest of the seating booth.			

1005 Means of Egress Sizing

Floor	No. of Occ	Stair				Stair Door and Components			
		No. of Stairs Required	Actual Width	Units Per Inch *1	Max Cap	No. of Doors Required	Actual Width	Units Per Inch *2	Max Cap
First Floor	83	0	0	0.3	0	0.15	108	0.2	540
Second Floor	48	1	48	0.3	160	0.13	72	0.2	360

*1 1005.3.1.1 For other than Group H and I-2 occupancies, the capacity, in inches, of means of egress stairways shall be calculated by multiplying the occupant load served by such stairways by a means of egress capacity factor of 0.2 inch (5.1 mm) per occupant in buildings equipped throughout with an automatic sprinkler system installed in accordance with Section 903.3.1.1 or 903.3.1.2 and an emergency voice/alarm communication system in accordance with Section 907.5.2.2.

*2 1005.3.2.1 For other than Group H and I-2 occupancies, the capacity, in inches, of means of egress components other than stairways shall be calculated by multiplying the occupant load served by such component by a means of egress capacity factor of 0.15 inch (3.8 mm) per occupant in buildings equipped throughout with an automatic sprinkler system installed in accordance with Section 903.3.1.1 or 903.3.1.2 and an emergency voice/alarm communication system in accordance with Section 907.5.2.2.

1005.6 Egress convergence. Where the means of egress from stories above and below converge at an intermediate level, the capacity of the means of egress from the point of convergence shall be not less than the largest minimum width or the sum of the required capacities for the stairways or ramps serving the two adjacent stories, whichever is larger.

Section 1006	NUMBER OF EXITS AND EXIT ACCESS DOORWAYS	
1006.2.1 Egress based on occupant load and common path of egress travel distance.	Two exits or exit access doorways from any space shall be provided where the design occupant load or the common path of egress travel distance exceeds the values listed in Table 1006.2.1.	

Table 1006.2.1 SPACES WITH ONE EXIT OR EXIT ACCESS DOORWAY	Occupancy	Max Occ Load	Max Common Path of Egress Travel Distance (ft)		
			W/O Sprinkler System - Occ Load (OL)		With Sprinkler Sys
			OL<=30	OL>30	
	A	49	75	75	75
	B	49	100	75	100
1006.3.2 Egress Based on Occupant Load	Each story and occupied roof shall have the minimum number of separate and distinct exits, or access to exits, as specified in Table 1006.3.2. A single exit or access to a single exit shall be permitted in accordance with Section 1006.3.3. The required number of exits, or exit access stairways or ramps providing access to exits, from any story or occupied roof shall be maintained until arrival at the exit discharge or a public way.				
Table 1006.3.2 Minimum Number of Exits or Access to Exits per Story	Occupant Load per Story		Minimum Number of Exits or Access to Exits from Story		
	1-500		2		
	501-1000		3		
	More Than 1000		4		

Table 1006.3.2.2 Stories with One Exit or Access to One Exit for Other Occupancies	Story	Occupancy	Max Occupant Load Per Story	Max Common Path of Egress Travel Dist (ft)
	First story above or below grade plane	A-1	49	75 (100 if sprinklered)
		A-3	49	75 (100 if sprinklered)
		B	29	75 (100 if sprinklered)
1006.3.3 Single Exits	A single exit or access to a single exit shall be permitted from any story or occupied roof where one of the following conditions exists: 1. The occupant load, number of dwelling units and exit access travel distance do not exceed the values in Table 1006.3.2(1) or 1006.3.2(2).			
Section 1007	EXIT AND EXIT ACCESS DOORWAY CONFIGURATION			
1007.1.1	2 exits doorways-Remoteness	One half diagonal of space required.		
1007.1.1	Exception 2	One third diagonal of space required for a building		
Section 1009	ACCESSIBLE MEANS OF EGRESS			
1009.3 Stairways	In order to be considered part of an accessible means of egress, a stairway between stories shall have a clear width of 48 inches (1219 mm) minimum between handrails and shall either incorporate an area of refuge within an enlarged floor-level landing or shall be accessed from an area of refuge complying with Section 1009.6. Exit access stairways that connect levels in the same story are not permitted as part of an accessible means of egress.			
1009.6 Areas of refuge.	Every required area of refuge shall be accessible from the space it serves by an accessible means of egress.			
Section 1010	DOORS, GATES AND TURNSTILES			
1010.1.1	Size of Doors	Clear width minimum 32 inches		
1010.1.2.1	Direction of Swing	Direction of egress travel where serving a room containing an occupant load of 50 or more.		
1010.1.10	Panic and Fire Exit Hardware	Not Required		
SECTION 1017	EXIT ACCESS TRAVEL DISTANCE			
Table 1017.2 Exit Access Travel Distance	Occupancy	without sprinkler	with sprinkler	
	A-1 & E	200c	250b	
	B	200	300c	
SECTION 1019	EXIT ACCESS STAIRWAYS AND RAMPS			
1019.3 Occupancies other than Groups I-2 and I-3. In other than Group I-2 and I-3 occupancies, floor openings containing exit access stairways or ramps that do not comply with one of the conditions listed in this section shall be enclosed with a shaft enclosure constructed in accordance with Section 713				
1019.3.4. Exit access stairways and ramps in buildings equipped throughout with an automatic sprinkler system in accordance with Section 903.3.1.1, where the area of the vertical opening between stories does not exceed twice the horizontal projected area of the stairway or ramp and the opening is protected by a draft curtain and closely spaced sprinklers in accordance with NFPA 13. In other than Group B and M occupancies, this provision is limited to openings that do not connect more than four stories.constructed in accordance with Section 713				
SECTION 1020	CORRIDORS			
Table 1020.1 Corridor Fire-Resistance Rating	Occupancy	Occupany Load Served by Corridor	Required Fire-Resistance Rating (hours)	
			Without Sprinkler System	With Sprinkler System c
	A/B	Greater than 30	1	0
1020.4 Dead Ends	Max	20ft	Exception 2	Max w sprinkler 50 ft
SECTION 1029	ASSEMBLY			
1029.2 Assembly Main Exit	A building, room or space used for assembly purposes that has an occupant load of greater than 300 and is provided with a main exit, that main exit shall be of sufficient capacity to accommodate not less than onehalf of the occupant load, but such capacity shall be not less than the total required capacity of all means of egress leading to the exit. Where the building is classified as a Group A occupancy, the main exit shall front on not less than one street or an unoccupied space of not less than 10 feet (3048 mm) in width that adjoins a street or public way. In a building, room or space used for assembly purposes where there is not a well-defined main exit or where multiple main exits are provided, exits shall be permitted to be distributed around the perimeter of the building provided that the total capacity of egress is not less than 100 percent of the required capacity.			
1029.3 Assembly Other Exits	In addition to having access to a main exit, each level in a building used for assembly purposes having an occupant load greater than 300 and provided with a main exit, shall be provided with additional means of egress that shall provide an egress capacity for not less than one-half of the total occupant load served by that level and shall comply with Section 1007.1. In a building used for assembly purposes where there is not a well-defined main exit or where multiple main exits are provided, exits for each level shall be permitted to be distributed around the perimeter			
CHAPTER 11: ACCESSIBILITY				
Section 1104	ACCESSIBLE ROUTE			
1104.4 Multistory buildings and facilities	Multistory buildings and facilities. At least one accessible route shall connect each accessible story and mezzanine in multilevel buildings and facilities. Exceptions: 1. An accessible route is not required to stories and mezzanines that have an aggregate area of not more than 3,000 square feet (278.7 m2) and are located above and below accessible levels.			

NYS BUILDING CODE

IT IS A VIOLATION OF THE LAW FOR ANY PERSON, UNLESS ACTING UNDER THE DIRECTION OF A LICENSED ARCHITECT, TO ALTER AN ITEM IN ANY WAY.

No.	Date	Revisions
0	02-18-25	RFP SET

Drawn by MAL
Checked by MS/JC
Project No. 40034G
Scale AS NOTED
Date 03-23-20

Mechanical, Electrical & Structural Engineer: GREENMAN PEDERSEN, INC 8 EXECUTIVE BOULEVARD SUFFERN, NY 10901

Civil Engineer: ATZL,NASHER,& ZIGLER 234 North Main Street New City, NY 10956

RENOVATION OF ROCKLAND GREEN ADMINISTRATIVE HEADQUARTERS AND CONSTRUCTION OF AN IMMERSIVE THEATRE EXPERIENCE

172 MAIN STREET NYACK, NY 10994

TOWN OF CLARKSTOWN COUNTY OF ROCKLAND

MICHAEL SHILALE ARCHITECTS, L.L.P.
140 Park Avenue New City, NY 10956 Tel 845-708-9200
www.shilale.com

© COPYRIGHT, MICHAEL SHILALE ARCHITECTS, ALL RIGHTS RESERVED.

Drawing Title
BUILDING CODE ANAYLSIS

Drawing No.
B-101

CHAPTER 29: PLUMBING SYSTEMS

Table 2902.1 Minimum number of required plumbing fixtures

		WC		LAV		bathub s/	drinking fountains	other
		male	female	male	female			
Floor	use	1 per 125	1 per 65	1 per 200	1 per 200	NA	1 per 500	1 svc sink
1	**A-1**	0.15	0.28	0.09	0.09	0	0.10	1
		1 per 25 for the first 50 and 1 per 50 for the remainder exceeding 50		1 per 40 for the first 80 and 1 per 80 for the remainder exceeding 80			1 per 100	1 scv sink
1	**B**	0.16	0.16	0.10	0.10	0	0.10	1
		1 per 50	1 per 50	1 per 50	1 per 50		1 per 100	1scv sink
1	**E**	0.38	0.38	0.38	0.38		0.6	
First Floor Total		0.69	0.82	0.57	0.57	0	0.80	1
First Floor Total fixtures required		**1**	**2**	**1**	**1**		**1 per fl**	**1**
Proposed First Floor Total fixtures		**2**	**2**	**1**	**1**		**1**	**1**

		1 per 25 for the first 50 and 1 per 50 for the remainder exceeding 50		1 per 40 for the first 80 and 1 per 80 for the remainder exceeding 80			1 per 100	1 scv sink
2	**B**	0.96	0.96	0.60	0.60	0	0.50	1
Second Floor Total		0.96	0.96	0.60	0.60	0	0.50	1
Second Floor Total fixtures required		**1**	**1**	**1**	**1**		**1 per fl**	**1**
Proposed Second Floor Total fixtures		**1**	**1**	**1**	**1**		**1**	**1**

The number of required drinking fountains is allowed to be reduced by up to 50 percent by substitution with bottled water coolers or bottled water dispensers (see IPC Section 410.1 and related commentary)

NYS BUILDING CODE

2020 ENERGY CONSERVATION CODE OF NEW YORK STATE

BUILDING CODE SUMMARY			
Owner	Rockland Green	Date:	12/18/2024
Project Name:	Rockland Green Alterations	County	Rockland County
Project Number:	40034G	Architect of Record	MSA
Project Address:	172 Main St. Nanuet, NY 10954		

APPLICABLE ORDINANCES, CODES & STANDARD	
2020	Building Code of New York State
2020	Energy Conservation Code of New York State

ENERGY CONSERVATION CODE: CHAPTER 4 COMMERCIAL ENERGY EFFICIENCY		
SECTION C402	Building Envelope Requirements	
Table C402.1.3	Building Envelope Requirements - Opaque Assemblies	
	Climate Zone 5A	
	Roofs	
	Insulation entirely above roof deck	R-30ci
	Metal Buildings	R-19+R-11LS
	Attic and other	R-38
	Walls above grade	
	Mass	R-11.4ci
	Metal Building	R-13+R-13ci
	Metal framed	R13 + 7.5ci
	Wood Framed and other	R13 + R-3.8i or R-20
	Walls Below Grade	
	Below Grade Wall	R-7.5ci
	Floors	
	Mass	R-10ci
	Joist/Framing	R-30
	Slab on grade floors	
	Unheated slabs	R-10 for 24" below
	Heated slabs	R-15 for 36" below+R-5 full slab
Table C402.4	Fenestration U Factor	
	Fixed Fenetration	0.38
	Operable Fenestratipn	0.45
	Entrance Doors	0.77
SECTION C403	Building Mechanical Systems	
C403.1 General	Mechanical systems and equipment serving the building heating, cooling, ventilating or refrigerating needs shall comply with this section.	
C403.1.1 Calculation of Heating and Cooling Loads (Mandatory)	Design loads associated with heating, ventilating and air conditioning of the building shall be determined in accordance with ANSI/ASHRAE/ACCA Standard 183 or by an approved equivalent computational procedure using the design parameters specified in Chapter 3. Heating and cooling loads shall be adjusted to account for load reductions that are achieved where energy recovery systems are utilized in the HVAC system in accordance with the ASHRAE HVAC Systems and Equipment Handbook by an approved equivalent computational procedure.	

ENERGY CODE

IT IS A VIOLATION OF THE LAW FOR ANY PERSON, UNLESS ACTING UNDER THE DIRECTION OF A LICENSED ARCHITECT, TO ALTER AN ITEM IN ANY WAY.

No.	Date	Revisions
0	02-18-25	RFP SET

Drawn by MAL
Checked by MS/JC
Project No. 40034G
Scale AS NOTED
Date 03-20-23

Mechanical, Electrical & Structural Engineer: GREENMAN PEDERSEN, INC
2 EXECUTIVE BOULEVARD
SUITE 202
SUFFERN, NY 10901

Civil Engineer: ATZL,NASHER,& ZIGLER
234 North Main Street
New City, NY 10956

RENOVATION OF ROCKLAND GREEN ADMINISTRATIVE HEADQUARTERS AND CONSTRUCTION OF AN IMMERSIVE THEATRE EXPERIENCE

172 MAIN STREET
NANUET, NY 10954

TOWN OF CLARKSTOWN
COUNTY OF ROCKLAND

MICHAEL SHILALE ARCHITECTS, L.L.P.
140 Park Avenue New City, NY 10956 Tel 845-708-9200
www.shilale.com

© COPYRIGHT, MICHAEL SHILALE ARCHITECTS, ALL RIGHTS RESERVED.

Drawing Title
BUILDING CODE ANAYLSIS

Drawing No.
B-102

Interior Fire Resistant Rated Walls

1 hr

2 hrs

Travel Path

NOTES:
1. All doors in fire resistant rated walls are fire resistant self-closing type.
2. All EXIT/EMERGENCY SIGNS ARE NEW

Space Designations

OFFICE — Room Name
G122 — Room Number
E 120 — Occupancy Group / Gross Floor Area (SF)
120/12 — Net Floor Area (SF)/ Occupant Load

Emergency Light

Exit Sign

Directional Exit Sign

Water Fountains

fe — Fire Extinguisher
Provide and install 12 5lb fire extinguishers and cabinets.
Location to be designated on site.

LEGEND

EXIT CAPACITY

SPACE	NO. OF OCCUPANTS	STAIR				STAIR DOOR AND COMPONENTS				EXIT AT GRADE			
		NO.	ACTUAL WIDTH	UNITS PER INCH	MAX. CAP.	NO.	ACTUAL WIDTH	UNITS PER INCH	MAX. CAP.	NO.	ACTUAL WIDTH	UNITS PER INCH	MAX. CAP.
1st Floor	78	–	–	–	–	–	–	–	–	–	108	.20	540
	–	–	–	–	–	–	–	–	–	–	–	–	–
		TOTAL MAX. CAP.			–	TOTAL MAX. CAP.			–	TOTAL MAX. CAP.			–
										TOTAL EXIT CAPACITY ON FLOOR			–

MAXIMUM TRAVEL DISTANCE TO EXIT FIRST FLOOR	49'-2"

EGRESS CALCULATIONS

OCCUPANT LOAD: FIRST FLOOR

FUNCTION OF SPACE		AREA (SF)	OCCUPANT LOAD FACTOR	TOTAL OCCUPANTS
ED. EXHIBIT	–	976	30	33
BREAK ROOM	–	282	15	18
THEATER	–	402	15	27
			TOTAL OCCUPANTS	78

FIRST FLOOR TOTAL SF	4272

OCCUPANT LOAD

0 1/2 1
IF THIS BAR DOES NOT MEASURE 1", THEN DRAWING IS NOT TO FULL SCALE

2020 NEW YORK STATE BUILDING CODE				
PROJECT/BUILDING INFORMATION				
BUILDING HAS 2 FLOORS - FIRST, SECOND				
BUILDING IS FULLY SPRINKLERED				
FIRST FLOOR AREA = 4272				
SECOND FLOOR AREA = 4400				
CODE	NEW YORK STATE (2020 IBC AND IEBC)	CODE SECTION REFERENCE	OTHER	ACTUAL/REMARKS
OCCUPANCY	A-1 A-3 B	303 & 304		
CONSTRUCATION TYPE	IIB	Chapter 6: Types of Construction		IIB
MAX. TRAVEL DISTANCE	A-1, A-3 = 250' maximum with sprinkler system B - 300' maximum with sprinkler system	1017.2		57'-9"(Complies)
COMMON PATH OF TRAVEL	75' maximum with sprinkler system	1006.2.1		34'-0" (Complies)
MAXIMUM DEAD END CORRIDOR	50' maximum	1020.4		**NONE**
REMOTENESS OF EXITS	No less than 1/2 of building diagonal	1007.1.1		62'-3"(Complies)
REQUIRED # OF EXITS	1-500 Occupants Min # of Exits - 2	1006.3.3.2		3 Provided (Complies)
MINIMUM CORRIDOR WIDTH	24" minimum	1020.2		36" corridor width (Complies)
REQUIRED EGRESS WIDTH (STAIRS)	.3"/Occupant=50" .87"/4 (Stairways) 12.5" **44" minimumm**	1005.3.1 1011.2		**[UNDER REVIEW]**
REQUIRED STAIR DIMENSIONS (EXIST)				
WIDTH	44" minimum	1011.2		**[UNDER REVIEW]**
LANDINGS	No less than current stair width	1011.6		
RISERS	4" minimum, 7" maximum	1011.5.2		
TREADS	11" minimum	1011.5.2		
HEAD HEIGHT	80" minimum	1011.3		
RATINGS - CORRIDORS	1hr minimum	1020.1		**1 HR.**
RATINGS - STAIRS	No less than 1hr and no greater than 2hrs. No less than current floor rating.	1023.2		**1 HR.**
RATINGS - SHAFTS	No less than 1hr for less than 4 stories	713.4		**1 HR.**
MINIMUM CLEAR OPENING WIDTH	32" minimum	1010.1.1		36" Minimum (Complies)
REQUIRED CAPACITY BASED ON OCCUPANT LOAD OTHER	.2" per Occ. X 78 = 15.6"min (comply with 1010.1.1)	1005.3.2.1		3 - 36" openings (Complies)
OCCUPANT LOAD	Rest of 1st floor - 150 GSF Per Occ. Ed Tour - 30 GSF Per Occ. Theater - 15 GSF Per Occ.	1004.5		Occ. Load = 81

NY STATE BUILDING CODE

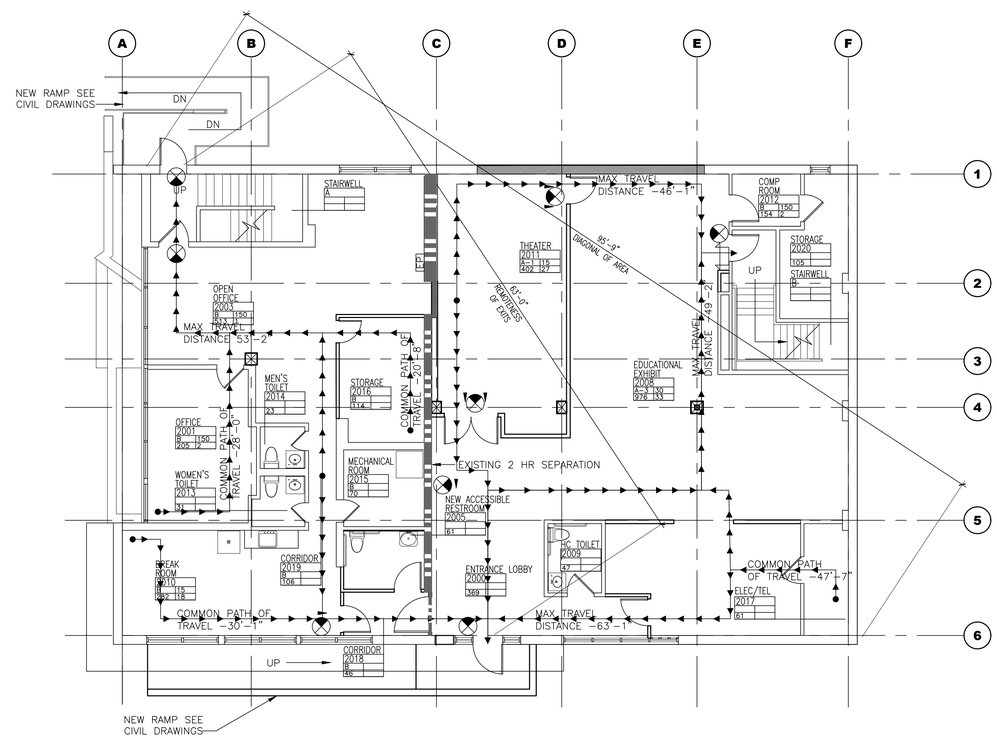

1 FIRST FLOOR EGRESS PLAN

SCALE: 1/8"=1'-0"

PLAN NORTH

IT IS A VIOLATION OF THE LAW FOR ANY PERSON, UNLESS ACTING UNDER THE DIRECTION OF A LICENSED ARCHITECT, TO ALTER AN ITEM IN ANY WAY.

No.	Date	Revisions
0	02-18-25	RFP SET

Drawn by SP/JR
Checked by MS/JC
Project No. 40034G
Scale AS NOTED
Date 06-07-24

GREENMAN PEDERSEN, INC
2 EXECUTIVE BOULEVARD
SUITE 202
SUFFERN, NY 10901

Mechanical, Electrical & Structural Engineer:

ATZL, NASHER, & ZIGLER
234 North Main Street
New City, NY 10956

Civil Engineer:

RENOVATION OF ROCKLAND GREEN ADMINISTRATIVE HEADQUARTERS AND CONSTRUCTION OF AN IMMERSIVE THEATRE EXPERIENCE

TOWN OF CLARKSTOWN
COUNTY OF ROCKLAND

175 MAIN STREET
NANUET, NY 10954

MICHAEL SHILALE ARCHITECTS, L.L.P.
140 Park Avenue New City, NY 10956 Tel 845-708-9200
www.shilale.com

© COPYRIGHT, MICHAEL SHILALE ARCHITECTS, ALL RIGHTS RESERVED.

Drawing Title
FIRST FLOOR EGRESS PLAN

Drawing No.
B-110

Interior Fire Resistant Rated Walls

1 hr

2 hrs

Travel Path

NOTES:
1. All doors in fire resistant rated walls are fire resistant self-closing type.
2. All EXIT/EMERGENCY SIGNS ARE NEW

Space Designations

OFFICE — Room Name
G122 — Room Number
E 120 — Occupancy Group / Gross Floor Area (SF)
120/12 — Net Floor Area (SF)/ Occupant Load

Emergency Light

Exit Sign

Directional Exit Sign

Water Fountains

Fe — Fire Extinguisher
Provide and install 12 5lb fire extinguishers and cabinets.
Location to be designated on site.

LEGEND

EXIT CAPACITY

SPACE	NO. OF OCCUPANTS	STAIR NO.	STAIR ACTUAL WIDTH	STAIR UNITS PER INCH	STAIR MAX. CAP.	STAIR DOOR AND COMPONENTS NO.	STAIR DOOR AND COMPONENTS ACTUAL WIDTH	STAIR DOOR AND COMPONENTS UNITS PER INCH	STAIR DOOR AND COMPONENTS MAX. CAP.	EXIT AT GRADE NO.	EXIT AT GRADE ACTUAL WIDTH	EXIT AT GRADE UNITS PER INCH	EXIT AT GRADE MAX. CAP.
SECOND FLOOR	71	–	–	–	–	–	–	–	–	–	72	.20	360
	–	–	–	–	–	–	–	–	–	–	–	–	–
		TOTAL MAX. CAP.			–	TOTAL MAX. CAP.			–	TOTAL MAX. CAP.			–
										TOTAL EXIT CAPACITY ON FLOOR			–

MAXIMUM TRAVEL DISTANCE TO EXIT SECOND FLOOR	69'-5"

EGRESS CALCULATIONS

OCCUPANT LOAD: SECOND FLOOR

FUNCTION OF SPACE		AREA (SF)	OCCUPANT LOAD FACTOR	TOTAL OCCUPANTS
SECOND FLOOR	–	2721	150	18
CONFERENCE RM	–	797	15	53
	–	–	–	–
			TOTAL OCCUPANTS	71

SECOND FLOOR TOTAL SF	4400

OCCUPANT LOAD

IF THIS BAR DOES NOT MEASURE 1", THEN DRAWING IS NOT TO FULL SCALE

0 1/2 1

2020 NEW YORK STATE BUILDING CODE				
PROJECT/BUILDING INFORMATION				
BUILDING HAS 2 FLOORS - FIRST, SECOND				
BUILDING IS FULLY SPRINKLERED				
FIRST FLOOR AREA = 4272				
SECOND FLOOR AREA = 4400				
CODE	NEW YORK STATE (2020 IBC AND IEBC)	CODE SECTION REFERENCE	OTHER	ACTUAL/REMARKS
OCCUPANCY	B	304		
CONSTRUCATION TYPE	IIB	Chapter 6: Types of Construction		IIB
MAX. TRAVEL DISTANCE	B - 300' maximum with sprinkler system	1017.2		69'-5" (Complies)
COMMON PATH OF TRAVEL	75' maximum with sprinkler system	1006.2.1		33'-5" (Complies)
MAXIMUM DEAD END CORRIDOR	50' maximum	1020.4		13'-10" Dead end corridor (Complies)
REMOTENESS OF EXITS	No less than 1/2 of building diagonal	1007.1.1		82'-11"(Complies)
REQUIRED # OF EXITS	1-500 Occupants Min # of Exits - 2	1006.3.3.2		2 Provided (Complies)
MINIMUM CORRIDOR WIDTH	44" minimum	1020.2		48" Corridor width (Complies)
REQUIRED EGRESS WIDTH (STAIRS)	.3"/Occupant=50" 87"/4 (Stairways) 12.5" **44" minimumm**	1005.3.1 1011.2		**[UNDER REVIEW]**
REQUIRED STAIR DIMENSIONS (EXIST)				**[UNDER REVIEW]**
WIDTH	44" minimum	1011.2		**[UNDER REVIEW]**
LANDINGS	No less than current stair width	1011.6		
RISERS	4" minimum, 7" maximum	1011.5.2		
TREADS	11" minimum	1011.5.2		
HEAD HEIGHT	80" minimum	1011.3		
RATINGS - CORRIDORS	1hr minimum	1020.1		**1 HR.**
RATINGS - STAIRS	No less than 1hr and no greater than 2hrs. No less than current floor rating.	1023.2		**1 HR.**
RATINGS - SHAFTS	No less than 1hr for less than 4 stories	713.4		**1 HR.**
MINIMUM CLEAR OPENING WIDTH	32" minimum	1010.1.1		36" Minimum (Complies)
REQUIRED CAPACITY BASED ON OCCUPANT LOAD OTHER	.2" per Occ. X 71 = 14.2"min (comply with 1010.1.1)	1005.3.2.1		2 - 36" openings (Complies)
OCCUPANT LOAD	Rest of Second Floor - 150 GSF Per Occ. Conference Room - 15 GSF Per Occ.	1004.5		Occ. Load = 48

NY STATE BUILDING CODE

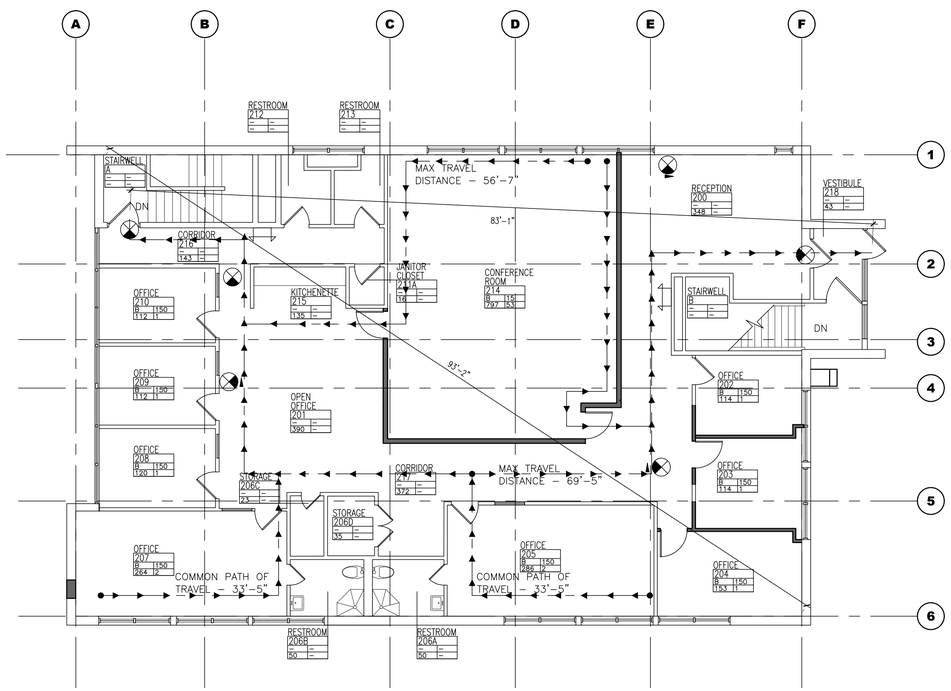

1 SECOND FLOOR EGRESS PLAN

SCALE: 1/8"=1'-0"

PLAN NORTH

IT IS A VIOLATION OF THE LAW FOR ANY PERSON, UNLESS ACTING UNDER THE DIRECTION OF A LICENSED ARCHITECT, TO ALTER AN ITEM IN ANY WAY.

No.	Date	Revisions
0	02-18-25	RFP SET

Drawn by MAL/JR
Checked by MS/JC
Project No. 40034G
Scale AS NOTED
Date 03-20-23

GREENMAN PEDERSEN, INC
2 EXECUTIVE BOULEVARD
SUITE 202
SUFFERN, NY 10901

Mechanical, Electrical, Plumbing Engineer:

ATZL, NASHER, & ZIGLER
234 North Main Street
New City, NY 10956

Structural Engineer:

RENOVATION OF ROCKLAND GREEN ADMINISTRATIVE HEADQUARTERS AND CONSTRUCTION OF AN IMMERSIVE THEATRE EXPERIENCE

TOWN OF CLARKSTOWN
COUNTY OF ROCKLAND

172 MAIN STREET
NANUET, NY 10954

MICHAEL SHILALE ARCHITECTS, L.L.P.
140 Park Avenue New City, NY 10956 Tel 845-708-9200
www.shilaile.com

© COPYRIGHT, MICHAEL SHILALE ARCHITECTS, ALL RIGHTS RESERVED.

Drawing Title
SECOND FLOOR EGRESS PLAN

Drawing No.
B-111

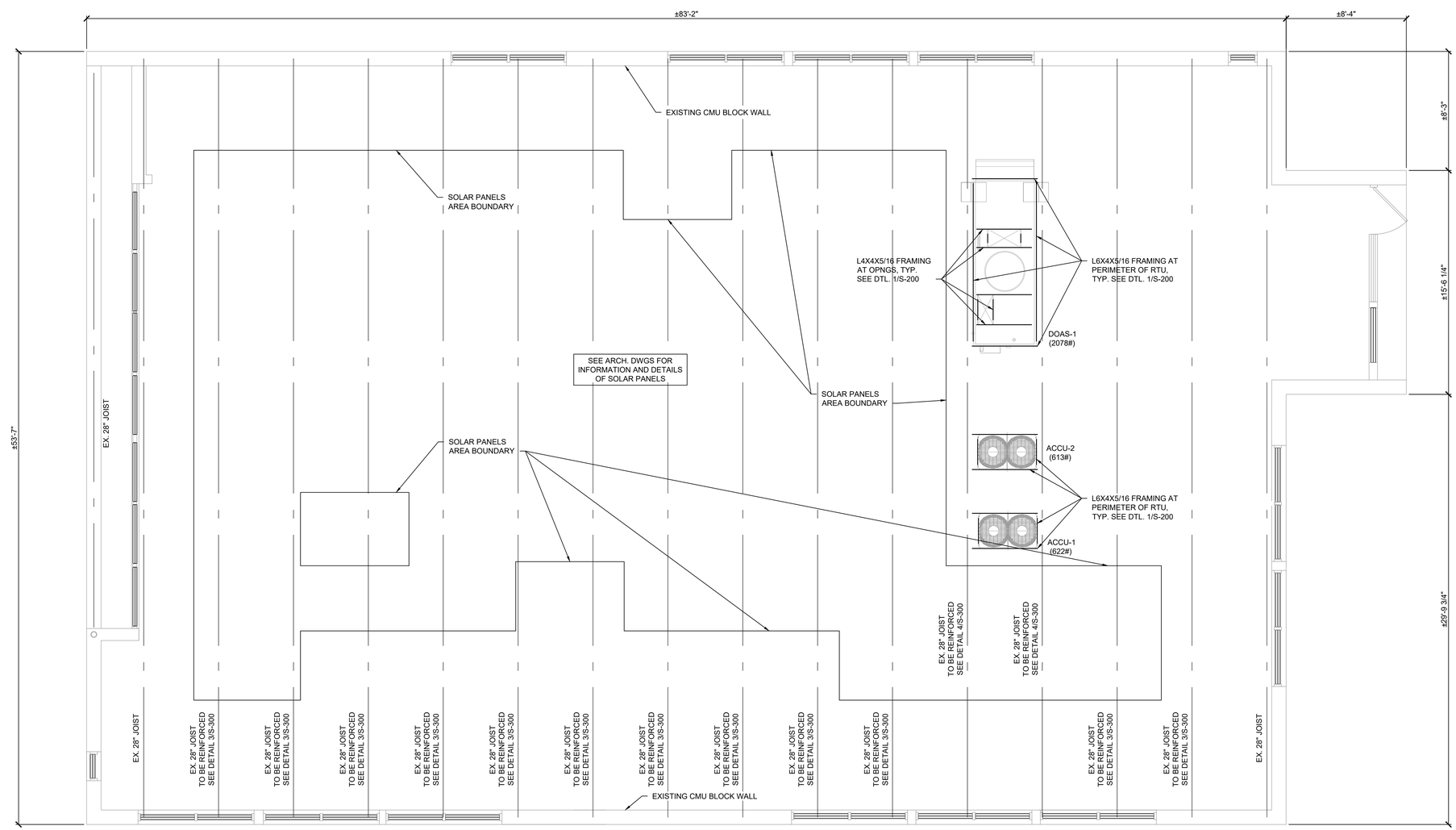

1 / S-100 MECH. EQUIPS. AND SOLAR ARRAYS SUPPORT ON EXIST. ROOF FRAMING PLAN

SCALE: 1/4" = 1'-0"

GENERAL NOTES

1. ALL STRUCTURAL ITEMS FOR THIS PROJECT HAVE BEEN DESIGNED IN ACCORDANCE WITH APPROPRIATE PROVISIONS OF EACH OF THE FOLLOWING:

   A. BUILDING CODE: NEW YORK CITY BUILDING CODE, 2022.
   B. STRUCTURAL STEEL: THE A.I.S.C. "SPECIFICATION FOR STRUCTURAL STEEL BUILDINGS ANSI/AISC 360-16.
2. THE STRUCTURAL DRAWINGS SHALL BE USED IN CONJUNCTION WITH THE ARCHITECTURAL AND MECHANICAL DRAWINGS. IF THERE IS A DISCREPANCY BETWEEN DRAWINGS, IT IS THE CONTRACTOR'S RESPONSIBILITY TO NOTIFY THE ARCHITECT AND/OR STRUCTURAL ENGINEER PRIOR TO PERFORMING WORK.
3. IN ANY CASE OF CONFLICT BETWEEN THE NOTES AND DETAILS, THE MOST RIGID REQUIREMENTS SHALL GOVERN.
4. DETAILS DESIGNATED AS "TYPICAL" APPLY TO ALL AREAS OF SIMILAR CONDITIONS UNLESS OTHERWISE NOTED.
5. MATERIAL FOR STRUCTURAL STEEL ANGLES AND MISCELLANEOUS STEEL SHALL CONFORM TO ASTM A36 HAVING A MINIMUM YIELD OF 36 KSI.
6. CONTRACTOR IS RESPONSIBLE FOR AND SHALL VERIFY AND COORDINATE ALL DIMENSIONS, DETAILS, AND EXISTING CONDITIONS BEFORE PROCEEDING WITH WORK. ANY DISCREPANCIES SHALL BE BROUGHT TO THE IMMEDIATE ATTENTION OF THE ARCHITECT AND/OR STRUCTURAL ENGINEER.
7. CONTRACTOR SHALL FULLY BRACE AND OTHERWISE PROTECT ALL WORK IN PROGRESS UNTIL THE STRUCTURAL WORK IS COMPLETED.
8. THE CONTRACTOR SHALL VISIT THE SITE TO BECOME FAMILIAR WITH CONDITIONS THEREON AND TO DETERMINE THE EXTENT OF ALL FACILITIES AND SERVICES REQUIRED TO PERFORM THE WORK IN ACCORDANCE WITH THE CONTRACT DOCUMENTS.

GENERAL NOTES CONT.

9. THE CONTRACTOR SHALL BE RESPONSIBLE TO CLIENT FOR THE ACTS AND OMISSIONS OF ALL THEIR EMPLOYEES AND ALL SUBCONTRACTORS, THEIR AGENTS AND EMPLOYEES, AND ALL OTHER PERSONS PERFORMING ANY OF THE WORK FOR THE CONTRACTOR.
10. THE CONTRACTOR SHALL BE RESPONSIBLE FOR ANY DAMAGE INCURRED ANYWHERE WITHIN THE BOUNDARIES OF THE PROPERTY, AND ANY DAMAGE SHALL BE PROMPTLY REPAIRED TO ORIGINAL CONDITION TO THE SATISFACTION OF THE CLIENT'S REPRESENTATIVE AND/OR EoR AT NO COST TO THE CLIENT.
11. DURING THE COURSE OF THE WORK, THE CONTRACTOR SHALL REGULARLY REMOVE ALL UNUSED MATERIAL, RUBBISH, AND DEBRIS FROM THE PROPERTY AND BROOM CLEAN DAILY. THE SITE AND PREMISES SHALL BE KEPT REASONABLY CLEAN, NEAT AND ORDERLY TO THE SATISFACTION OF THE CLIENT'S REPRESENTATIVE.
12. THE CONTRACTOR SHALL CONTROL CLEANING OPERATIONS TO PREVENT DIRT OR DUST FROM LEAVING THE JOB SITE AND INFILTRATING AREAS NOT INVOLVED IN THE PROJECT.
13. WHEN OPEN FLAME OR SPARK-PRODUCING TOOLS AND EQUIPMENT SUCH AS WELDING RODS ARE BEING USED, THE CONTRACTOR SHALL PROVIDE FIRE GUARDS TO MAINTAIN A FIRE WATCH OVER THE OPERATION OF THESE ITEMS AT ALL TIMES DURING THE USE AND UNTIL ALL MATERIALS HAVE COOLED SUFFICIENTLY TO NO LONGER CONSTITUTE A FIRE HAZARD.
14. THE STRUCTURAL ENGINEER SHALL NOT BE RESPONSIBLE FOR CONSTRUCTION MEANS, METHODS, TECHNIQUES, SEQUENCE OR PROCEDURES OF FOR THE SAFETY PRECAUTIONS AND PROGRAMS. THESE ARE SOLELY THE RESPONSIBILITY OF THE CONTRACTOR.
15. SUBMIT SHOP DRAWINGS, PRODUCT DATA FOR APPROVAL PRIOR TO PURCHASE AND FABRICATION OF MATERIALS AND COMPONENTS. REPRODUCTION OF CONTRACT DRAWINGS TO BE USED AS SHOP DRAWINGS IS NOT PERMITTED.

DESIGN LOADS

1. SEE TABLE ON THIS DRAWING FOR ROOF DEAD AND LIVE LOADS
2. SNOW LOADS:
   GROUND SNOW LOAD, Pg =30- PSF
   FLAT ROOF SNOW LOAD, Pf = 25.2 PSF *
   SNOW EXPOSURE FACTOR, Ce = 1.0
   SNOW LOAD IMPORTANCE FACTOR, I = 1.0
   THERMAL FACTOR, Ct = 1.2
3. WIND LOADS:
   BASIC WIND SPEED, Vult = 113 MPH
   Vasd = 87.5 MPH
   RISK CATEGORY II
   WIND EXPOSURE B
4. SEISMIC LOADS:
   SEISMIC RISK CATEGORY II
   SEISMIC IMPORTANCE FACTOR, I = 1.0
   MAPPED SPECTRAL RESPONSE ACCELERATIONS:
   Ss = 0.297g
   S1 = 0.062g
   SITE CLASS D
   SPECTRAL RESPONSE COEFFICIENTS:
   Sds = 0.31g
   Sd1 = 0.099g
   SEISMIC DESIGN CATEGORY B

ROOF LOAD SCHEDULE

ROOF DEAD LOAD:	
1 /1/2" - METAL ROOF DECK	3 PSF
ROOFING/ INSULATION	4 PSF
MEP	5 PSF
CEILING/ MISC.	3 PSF
SOLLAR SYSTEM	5.8 PSF
TOTAL DEAD LOAD	20.8 PSF
DESIGN FLAT ROOF SNOW LOAD	25.2 PSF
TOTAL ROOF LOAD	46 PSF

STEEL SPECIAL INSPECTIONS

SPECIAL INSPECTIONS REQUIRED UNDER THIS APPLICATION IN ACCORDANCE WITH CHAPTER 17 AND THE APPLICABLE SECTIONS OF THE NYS CONSTRUCTION CODE ARE LISTED IN THE FOLLOWING TABLES. SPECIAL INSPECTIONS FOR PORTIONS OF THE WORK THAT ARE FILED UNDER SEPARATE APPLICATION ARE NOT LISTED HERE AND ARE TO BE LISTED ON THOSE APPLICATIONS BY THE CONTRACTOR'S APPLICANT OF RECORD.

THE CONTRACTOR MUST NOTIFY THE RELEVANT SPECIAL INSPECTOR OR SPECIAL INSPECTION AGENCY IN WRITING FOR SPECIAL INSPECTIONS AT LEAST 72 HOURS BEFORE THE SPECIFIC WORK COMMENCES.

THE "AUTHORITY" SHALL BE RESPONSIBLE FOR THE FOLLOWING SPECIAL INSPECTIONS:	
STRUCTURAL STEEL - DETAILS	BC 1705.2.1
STRUCTURAL STEEL - WELDING	BC 1705.2.1

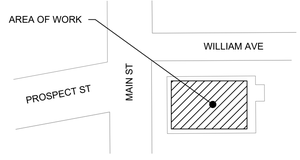

KEY PLAN

1/2 0 1
IF THIS BAR DOES NOT MEASURE 1", THEN DRAWING IS NOT TO FULL SCALE

No.	Date	Revisions
0	02-18-25	RFP SET

Drawn by YAY
Checked by RAB
Project No. 40034G
Scale
Date 02/18/2025

GREENMAN PEDERSEN, INC
8 EXECUTIVE BOULEVARD
SUITE 200
SUFFERN, NY 10901

Mechanical, Electrical & Structural Engineer:

ATZL, NASHER, & ZIGLER
234 North Main Street
New City, NY 10956

Civil Engineer:

RENOVATION OF ROCKLAND GREEN ADMINISTRATIVE HEADQUARTERS AND CONSTRUCTION OF AN IMMERSIVE THEATRE EXPERIENCE

TOWN OF CLARKSTOWN
COUNTY OF ROCKLAND

172 MAIN STREET
NANUET, NY 10954

MICHAEL SHILALE ARCHITECTS, L.L.P.
140 Park Avenue New City, NY 10956 Tel 845-708-9200
www.shilale.com

© COPYRIGHT, MICHAEL SHILALE ARCHITECTS, ALL RIGHTS RESERVED.

Drawing Title
MECH. EQUIPS. & SOLAR ARRAYS SUPPORT ON EXIST. ROOF FRAMING PLAN

Drawing No.
S-100

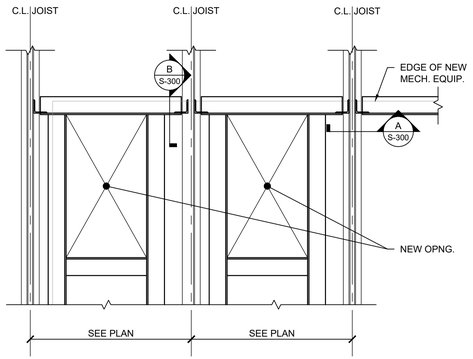

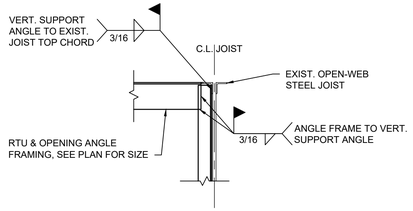

SECTION A

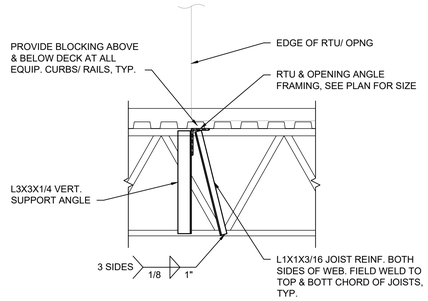

SECTION B

1 / S-300 TYP. ROOF OPNG. & ROOF TOP EQUIP. SUPPORT FRAME DETAIL

SCALE: 3/4" = 1'-0"

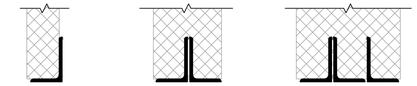

LOOSE LINTEL SCHEDULE			
MASONRY OPENING	4 INCH WALL	8 INCH WALL	12 INCH WALL
UP TO 4'-0"	L3 1/2x3 1/2x1/4	(2) L3 1/2x3 1/2x1/4	(3) L3 1/2x3 1/2x1/4
OVER 4'-0" TO 6'-0"	L4x3 1/2x1/4	(2) L4x3 1/2x1/4	(3) L4x3 1/2x1/4
OVER 6'-0" TO 7'-0"	L5x3 1/2x5/16	(2) L5x3 1/2x5/16	(3) L5x3 1/2x5/16
OVER 7'-0" TO 8'-0"	L6x3 1/2x5/16	(2) L6x3 1/2x5/16	(3) L6x3 1/2x5/16

NOTES:
1. ALL ANGLES ARE TO BE LONG LEG VERTICAL, UNLESS OTHERWISE NOTED.
2. ALL EXTERIOR LOOSE LINTELS SHALL BE HOT-DIPPED GALVANIZED.
3. PROVIDE MINIMUM 6" BEARING AT EACH END OF OPENING.
4. CONTRACTOR SHALL SUBMIT WITH THE ERECTION PLANS A COMPLETE SCHEDULE OF LOOSE LINTELS, INDICATING MARK, MASONRY OPENING, ANGLE SIZE, LENGTH, AND LOCATIONS.
5. COORDINATE ALL REQUIRED WALL OPENINGS WITH ARCHITECTURAL AND MECHANICAL, PLUMBING, AND ELECTRICAL DRAWINGS.

2 / S-300 TYPICAL LOOSE LINTEL SCHEDULE

SCALE: N.T.S.

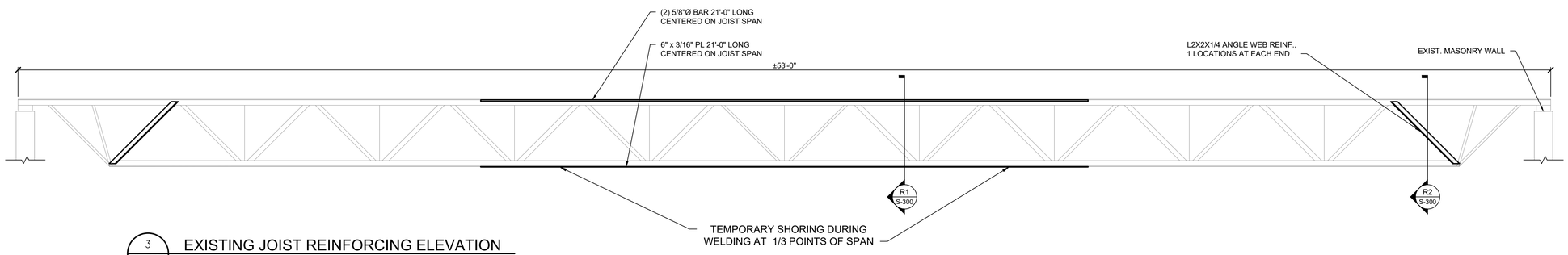

3 / S-300 EXISTING JOIST REINFORCING ELEVATION

SCALE: 1/2" = 1'-0"

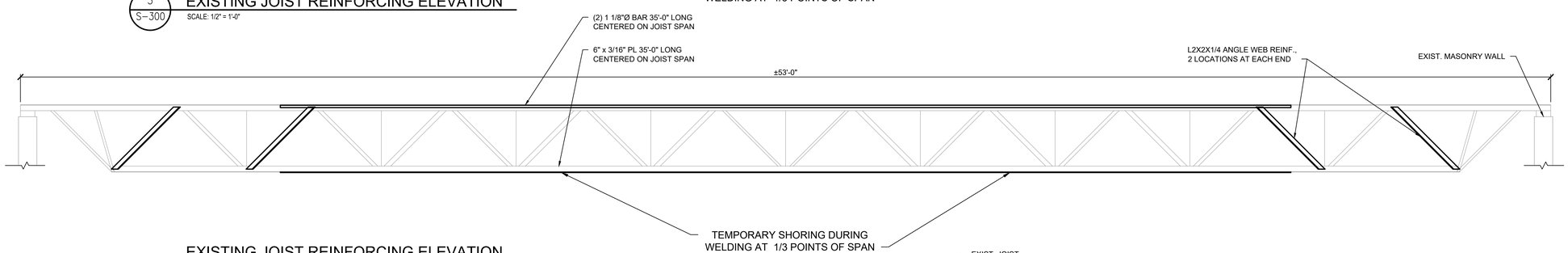

4 / S-300 EXISTING JOIST REINFORCING ELEVATION UNDER MECH. EQUIP.

SCALE: 1/2" = 1'-0"

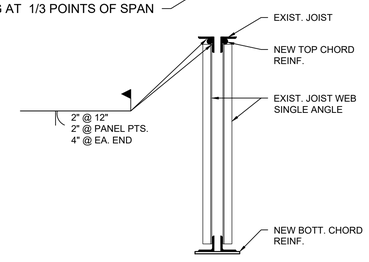

R1 / S-300 CHORD REINF. DETAIL

SCALE: N.T.S.

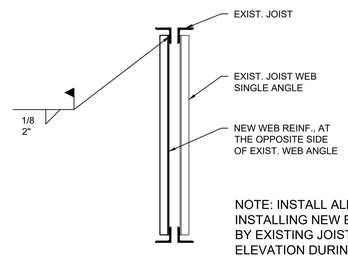

NOTE: INSTALL ALL JOIST REINFORCING PRIOR TO INSTALLING NEW ELEMENTS TO BE SUPPORTED BY EXISTING JOISTS. SHORE AS NOTED ON ELEVATION DURING WELDING

R2 / S-300 WEB REINF. DETAIL

SCALE: N.T.S.

© COPYRIGHT, MICHAEL SHILALE ARCHITECTS, ALL RIGHTS RESERVED.

Drawing Title
TYPICAL DETAILS & JOIST REINFORCING DETAILS

Drawing No.
S-300

MICHAEL SHILALE ARCHITECTS, L.L.P.
140 Park Avenue New City, NY 10956 Tel 845-709-9200
www.shilale.com

RENOVATION OF ROCKLAND GREEN ADMINISTRATIVE HEADQUARTERS AND CONSTRUCTION OF AN IMMERSIVE THEATRE EXPERIENCE

TOWN OF CLARKSTOWN
COUNTY OF ROCKLAND
172 MAIN STREET
NANUET, NY 10954

Mechanical, Electrical & Structural Engineer:
GREENMAN PEDERSEN, INC
8 EXECUTIVE BOULEVARD
SUITE 202
SUFFERN, NY 10901

Civil Engineer:
ATZL, NASHER, & ZIGLER
234 North Main Street
New City, NY 10956

Drawn by YAY
Checked by RAB
Project No. 40034G
Scale
Date 02/18/2025

No.	Date	Revisions
0	02-18-25	RFP SET

0 1/2 1
IF THIS BAR DOES NOT MEASURE 1", THEN DRAWING IS NOT TO FULL SCALE

EXISTING PARTITION

EXISTING PARTITION TO BE REMOVED

EXISTING DOOR

EXISTING DOOR TO BE REMOVED

EXISTING COLUMN TO REMAIN

LEGEND

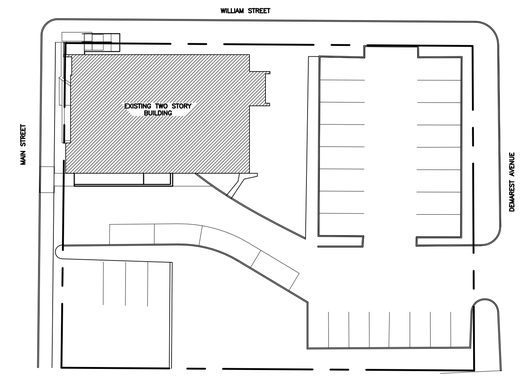

0 1/2 1
IF THIS BAR DOES NOT MEASURE 1, THEN DRAWING IS NOT TO FULL SCALE

PLAN NORTH

KEY PLAN

D1 SAW CUT EXISTING WALL FOR THE NEW DOOR OPENING.

D2 REMOVE EXISTING DOORS AND FRAMES.

D3 REMOVE EXISTING CEILING TILE AND GRID. REMOVE EXISTING LIGHT FIXTURES, PREPARE FOR NEW CEILING AND NEW LIGHT FIXTURES.

D4 SAW CUT AND DEMO EXISTING WALL AND PREPARE FOR WIDER OPENING. PROVIDE TEMPORARY SHORING AS REQUIRED.

D5 EXISTING CEILING MOUNTED FIRE, SMOKE, AND SECURITY DEVICES TO BE REMOVED, STORED, AND REINSTALLED AS REQUIRED FOR NEW ACT CEILING INSTALLATION.

D6 REMOVE EXISTING WALL.

D7 REMOVE EXISTING WINDOW. PREPARE WALL TO BE CLOSED.

D8 REMOVE EXISTING EXTERIOR STAIR. PREPARE TO INSTALL NEW RAMP. SEE CIVIL DRAWINGS.

D9 REMOVE EXISTING FLOORING. PREPARE FOR NEW FLOOR.

D10 REMOVE EXISTING HALF WALL AND PREPARE FOR BRICK RECONSTRUCTION

D11 SAW CUT EXISTING SLAB FOR PLUMBING FIXTURES AND SEWER PIPES. SEE DETAIL 4/A-620 FOR PATCHING. COORDINATE WITH MECHANICAL AND PLUMBING DRAWINGS.

D12 DEMO EXISTING CERAMIC FLOOR TILES.

D13 REMOVE EXISTING WINDOW. PREPARE FOR REFRAMING.

D14 REMOVE EXISTING ELECTRICAL PANEL. SEE ELEC DWGS.

D15 SAW CUT EXT'G CONCRETE SLAB TO ACCOMMODATE NEW ELECTRICAL CONDUIT. SEE ELEC DWGS

D16 REMOVE EXT'G RAMP AND PREP AREA FOR NEW RAMP.

D17 REMOVE EXT'G SPLIT UNIT.

DEMOLITION KEY NOTES

1. REMOVE ALL UNUSED DEVICES AND REPAIR/PATCH SURFACES.

2. CONTRACTOR SHALL BE RESPONSIBLE FOR PROTECTION OF EXISTING SITE AND FACILITIES FOR INSTALLATION OF NEW UNITS. CONTRACTOR WILL BE RESPONSIBLE FOR SITE RESTORATION AND FOR ANY DAMAGE TO EXISTING FACILITIES OR EQUIPMENT.

DEMOLITION NOTES

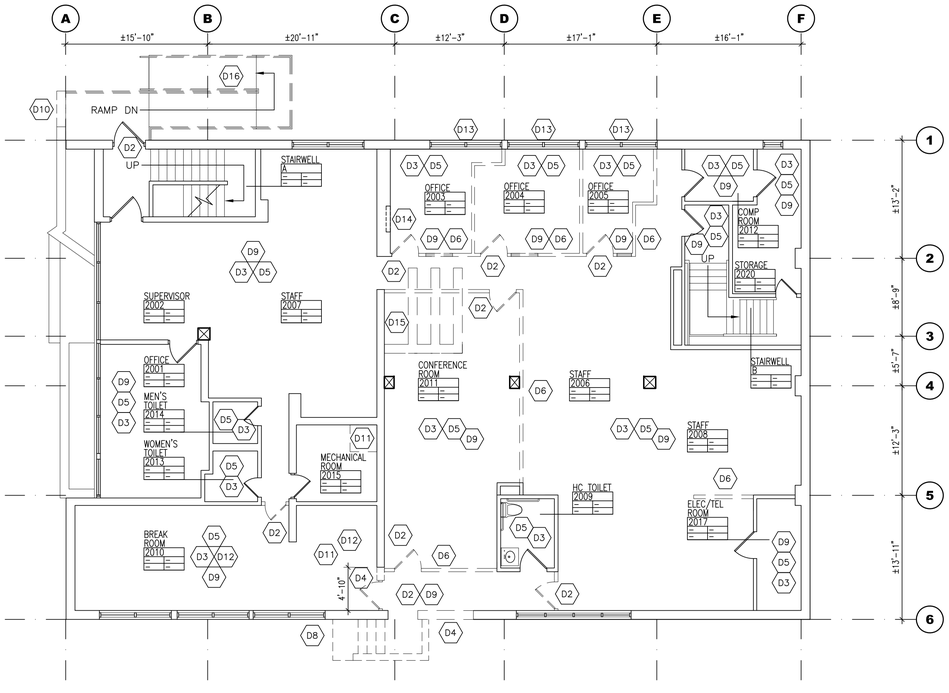

1 FIRST FLOOR DEMO PLAN

SCALE: 1/8"=1'-0"

PLAN NORTH

IT IS A VIOLATION OF THE LAW FOR ANY PERSON, UNLESS ACTING UNDER THE DIRECTION OF A LICENSED ARCHITECT, TO ALTER AN ITEM IN ANY WAY.

No.	Date	Revisions
0	02-18-25	RFP SET

Drawn by	MAL/JR
Checked by	MS/JC
Project No.	40034G
Scale	AS NOTED
Date	03-20-23

Mechanical, Electrical & Structural Engineer: GREENMAN PEDERSEN, INC 2 EXECUTIVE BOULEVARD SUITE 202 SUFFERN, NY 10901

Civil Engineer: ATZL, NASHER, & ZIGLER 234 North Main Street New City, NY 10956

RENOVATION OF ROCKLAND GREEN ADMINISTRATIVE HEADQUARTERS AND CONSTRUCTION OF AN IMMERSIVE THEATRE EXPERIENCE

TOWN OF CLARKSTOWN COUNTY OF ROCKLAND

170 MAIN STREET NEW CITY, NY 10954

MICHAEL SHILALE ARCHITECTS, L.L.P.
140 Park Avenue New City, NY 10956 Tel 845-708-9200
www.shilale.com

© COPYRIGHT, MICHAEL SHILALE ARCHITECTS, ALL RIGHTS RESERVED.

Drawing Title: FIRST FLOOR DEMO PLAN

Drawing No. D-101

EXISTING PARTITION

EXISTING PARTITION TO BE REMOVED

EXISTING DOOR

EXISTING DOOR TO BE REMOVED

EXISTING COLUMN TO REMAIN

LEGEND

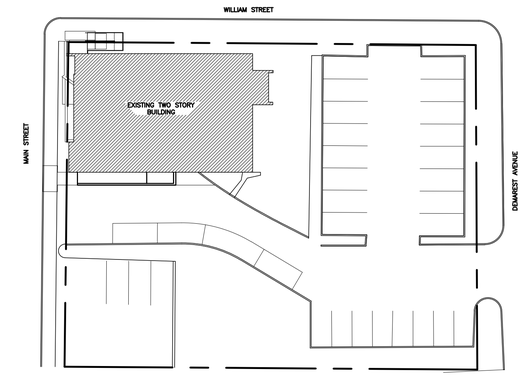

0 1/2 1
IF THIS BAR DOES NOT MEASURE 1, THEN DRAWING IS NOT TO FULL SCALE

PLAN NORTH

KEY PLAN

D1 SAW CUT EXISTING WALL FOR THE NEW DOOR OPENING.

D2 REMOVE EXISTING DOORS AND FRAMES.

D3 REMOVE EXISTING CEILING TILE AND GRID. REMOVE EXISTING LIGHT FIXTURES, PREPARE FOR NEW CEILING AND NEW LIGHT FIXTURES.

D4 SAW CUT AND DEMO EXISTING WALL AND PREPARE FOR WIDER OPENING. PROVIDE TEMPORARY SHORING AS REQUIRED.

D5 EXISTING CEILING MOUNTED FIRE, SMOKE, AND SECURITY DEVICES TO BE REMOVED, STORED, AND REINSTALLED AS REQUIRED FOR NEW ACT CEILING INSTALLATION.

D6 REMOVE EXISTING WALL.

D7 REMOVE EXISTING WINDOW. PREPARE WALL TO BE CLOSED.

D8 REMOVE EXISTING EXTERIOR STAIR. PREPARE TO INSTALL NEW RAMP. SEE CIVIL DRAWINGS.

D9 REMOVE EXISTING FLOORING. PREPARE FOR NEW FLOOR.

D10 REMOVE EXISTING HALF WALL AND PREPARE FOR BRICK RECONSTRUCTION

D11 SAW CUT EXISTING SLAB FOR PLUMBING FIXTURES AND SEWER PIPES. SEE STRUCTURAL DWGS FOR PATCHING DETAIL. COORDINATE WITH MECHANICAL AND PLUMBING DRAWINGS.

D12 DEMO EXISTING CERAMIC FLOOR TILES.

D13 REMOVE EXISTING WINDOW. PREPARE FOR REFRAMING.

D14 REMOVE EXISTING ELECTRICAL PANEL. SEE ELEC DWGS.

D15 SAW CUT EXT'G CONCRETE SLAB TO ACCOMMODATE NEW ELECTRICAL CONDUIT. SEE ELEC DWGS

D16 REMOVE EXT'G RAMP AND PREP AREA FOR NEW RAMP.

D17 REMOVE EXT'G SPLIT UNIT.

DEMOLITION KEY NOTES

1. REMOVE ALL UNUSED DEVICES AND REPAIR/PATCH SURFACES.
2. CONTRACTOR SHALL BE RESPONSIBLE FOR PROTECTION OF EXISTING SITE AND FACILITIES FOR INSTALLATION OF NEW UNITS. CONTRACTOR WILL BE RESPONSIBLE FOR SITE RESTORATION AND FOR ANY DAMAGE TO EXISTING FACILITIES OR EQUIPMENT.

DEMOLITION NOTES

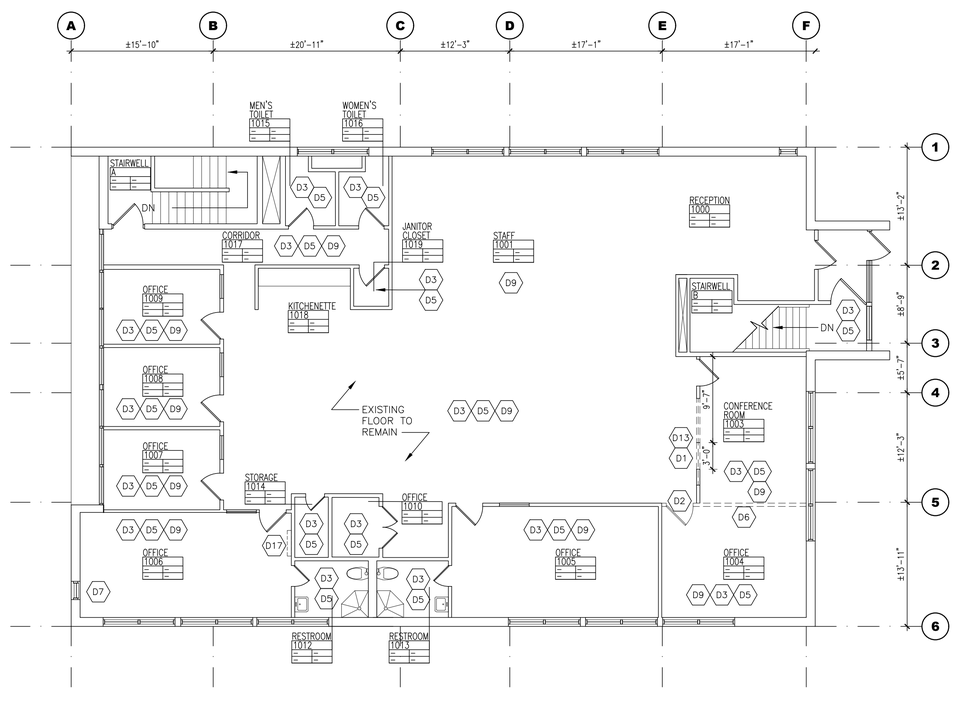

1 SECOND FLOOR DEMO PLAN

SCALE: 1/8"=1'-0"

PLAN NORTH

IT IS A VIOLATION OF THE LAW FOR ANY PERSON, UNLESS ACTING UNDER THE DIRECTION OF A LICENSED ARCHITECT, TO ALTER AN ITEM IN ANY WAY.

No.	Date	Revisions
0	02-18-25	RFP SET

Drawn by	MAL/JR
Checked by	MS/JC
Project No.	40034G
Scale	AS NOTED
Date	03-20-23

GREENMAN PEDERSEN, INC
2 EXECUTIVE BOULEVARD
SUITE 202
SUFFERN, NY 10901

Mechanical, Electrical & Structural Engineer:

ATZL, NASHER, & ZIGLER
234 North Main Street
New City, NY 10956

Civil Engineer:

RENOVATION OF ROCKLAND GREEN ADMINISTRATIVE HEADQUARTERS AND CONSTRUCTION OF AN IMMERSIVE THEATRE EXPERIENCE

TOWN OF CLARKSTOWN
COUNTY OF ROCKLAND

170 MAIN STREET
NANUET, NY 10954

MICHAEL SHILALE ARCHITECTS, L.L.P.
140 Park Avenue New City, NY 10956 Tel 845-708-9200
www.shilale.com

© COPYRIGHT, MICHAEL SHILALE ARCHITECTS, ALL RIGHTS RESERVED.

Drawing Title
SECOND FLOOR DEMO PLAN

Drawing No.
D-102

EXISTING THROUGH WALL LOUVER

EXISTING THROUGH WALL SCUPPER

EXISTING PIPE PENETRATION

EXISTING ROOF DRAIN

EXISTING VENTILATOR OR MECHANICAL PENETRATION

NEW SKYLIGHT

EQ EXISTING EQUIPMENT PAD

EXISTING SMOKE HATCH

EXISTING LADDER

EXISTING CHIMNEY

NEW RAILING (AS PER BASE BID)

EXISTING EXTERIOR WALL OF BUILDING

EXISTING AREA DIVIDER

EXISTING MECHANICAL EQUIPMENT

ROOF VENT

EXISTING FLUE VENT

NEW WALKWAY

EXISTING FRESH AIR INTAKE

00 NEW DOOR NUMBER

OVERHEAD PROTECTION

J JUNCTION BOX

SECURITY CAMERA

LEGEND

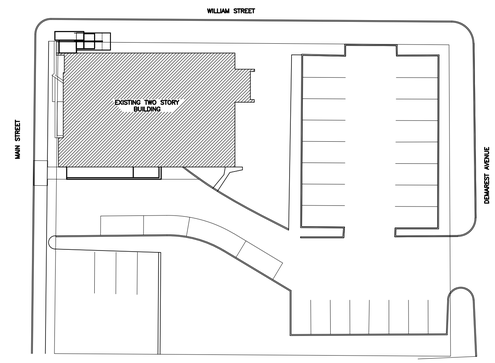

0 1/2 1
IF THIS BAR DOES NOT MEASURE 1, THEN DRAWING IS NOT TO FULL SCALE

KEY PLAN

D20 REMOVE EXISTING ROOFING, INSULATION AND METAL FASCIA DOWN TO THE EXISTING METAL DECK.

D21 REMOVE EXISTING EXHAUST FAN. DISCONNECT ELECTRIC AND CONTROLS. PREPARE FOR REINSTALLATION OF EXISTING EQUIPMENT.

D22 REMOVE EXISTING ABANDONED PENETRATION. PREPARE FOR NEW DECKING AND ROOFING.

D23 REMOVE EXISTING ROOFTOP UNIT OR CONDENSOR, AND RELATED CURBS, DUCTWORK AND PENETRATIONS. SEE MECHANICAL DRAWINGS. PREPARE FOR NEW ROOF INSTALLATION.

D24 PROTECT EXISTING CONNECTIONS. PREPARE EXISTING PENETRATION FOR NEW PIPE VENT PENETRATION.

D25 PROTECT EXISTING PIPE PENETRATION EXHAUST VENT. PREPARE VENT FOR RAISED INSULATION.

D26 VOID.

D27 CORE DRILL DECK FOR REQUIRED LINESETS AND POWER. COORDINATE WITH MECHANICAL DRAWINGS.

D28 REMOVE EXISTING SCUPPER AND SAW CUT EXISTING WALL TO PREPARE FOR RAISED DRAIN OPENING TO ACCOMODATE NEW INSULATION THICKNESS.

D29 SAW CUT EXISTING ROOF FOR NEW DOAS OPENING. COORDINATE WITH MECHANICAL AND STRUCTURAL DRAWINGS.

D30 REMOVE EXISTING JUNCTION BOX PENETRATING THROUGH ROOF. COORDINATE WITH ELECTRICAL DRAWINGS.

D31 REMOVE EXISTING SECURITY CAMERA AND PRESERVE ALL COMPONENTS (CAMERA AND HOUSING) FOR FUTURE INSTALLATION

DEMOLITION KEY NOTES

1. CONTRACTOR SHALL BE RESPONSIBLE FOR PROTECTION OF EXISTING SITE AND FACILITIES FOR INSTALLATION OF NEW UNITS. CONTRACTOR WILL BE RESPONSIBLE FOR SITE RESTORATION AND FOR ANY DAMAGE TO EXISTING FACILITIES OR EQUIPMENT.

DEMOLITION NOTES

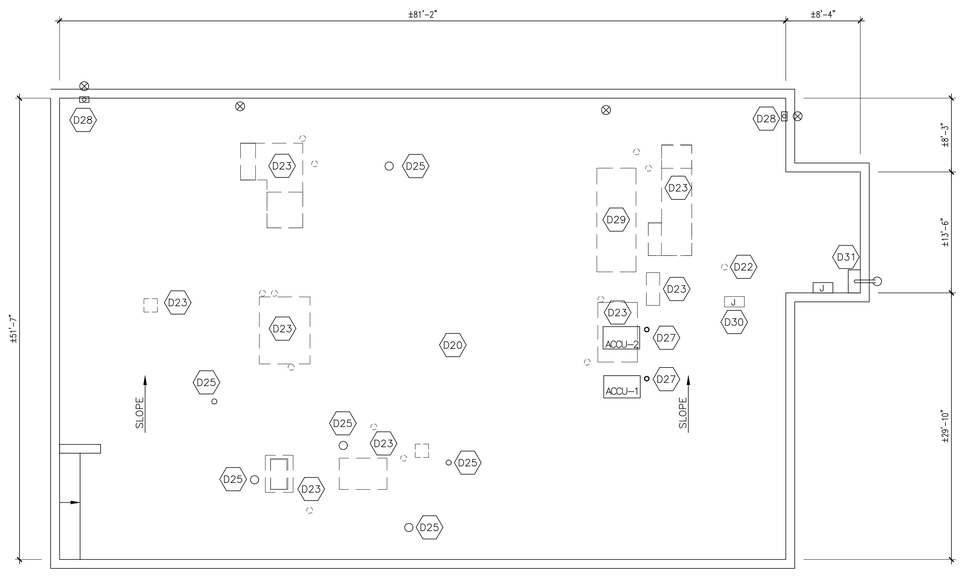

NOTE: SEE MECHANICAL DEMO DRAWINGS FOR EQUIPMENT REMOVALS.

1 ROOF DEMO PLAN
SCALE: 1/8"=1'-0"

PLAN NORTH

IT IS A VIOLATION OF THE LAW FOR ANY PERSON, UNLESS ACTING UNDER THE DIRECTION OF A LICENSED ARCHITECT, TO ALTER AN ITEM IN ANY WAY.

No.	Date	Revisions
0	02-14-25	RFP SET

Drawn by	MAL/JR
Checked by	MS/JC
Project No.	40034G
Scale	AS NOTED
Date	03-20-23

Mechanical, Electrical & Structural Engineer: GREENMAN PEDERSEN, INC
2 EXECUTIVE BOULEVARD
SUITE 202
SUFFERN, NY 10901

Civil Engineer: ATZL, NASHER, & ZIGLER
234 North Main Street
New City, NY 10956

RENOVATION OF ROCKLAND GREEN ADMINISTRATIVE HEADQUARTERS AND CONSTRUCTION OF AN IMMERSIVE THEATRE EXPERIENCE

172 MAIN STREET
NANUET, NY 10954

TOWN OF CLARKSTOWN
COUNTY OF ROCKLAND

MICHAEL SHILALE ARCHITECTS, L.L.P.
140 Park Avenue New City, NY 10956 Tel 845-708-9200
www.shilale.com

© COPYRIGHT, MICHAEL SHILALE ARCHITECTS, ALL RIGHTS RESERVED.

Drawing Title: ROOF DEMO PLAN

Drawing No. D-103

LEGEND

DEMO NOTES

D1 REMOVE EXISTING WINDOW. PREPARE OPENING TO BE CLOSED.

D2 REMOVE EXISTING STUCCO AND PREPARE FOR NEW BRICK VENEER.

D3 SAW CUT AND DEMO EXISTING WALL AND PREPARE FOR WIDER OPENING.

D4 REMOVE EXISTING HALF WALL AND PREPARE FOR BRICK RECONSTRUCTION.

D5 REMOVE EXISTING SECURITY CAMERA AND PRESERVE ALL COMPONENTS (CAMERA AND HOUSING) FOR FUTURE INSTALLATION

D6 REMOVE EXISTING WALL MOUNTED SIGNAGE. SALVAGE SIGN TO OWNER.

KEY PLAN

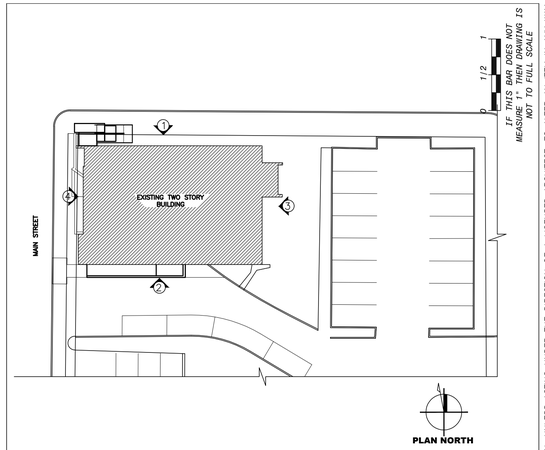

4 DEMOLITION WEST SIDE ELEVATION

SCALE: 1/8"=1'-0"

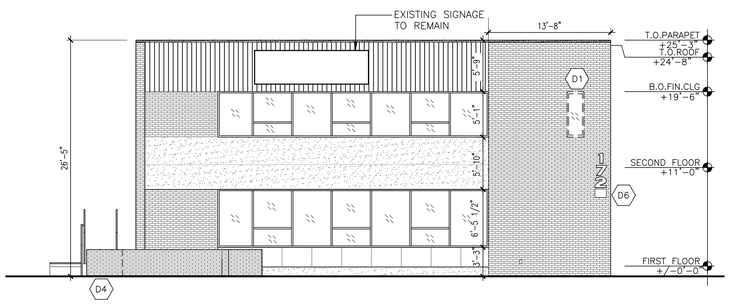

2 DEMOLITION SOUTH SIDE ELEVATION

SCALE: 1/8"=1'-0"

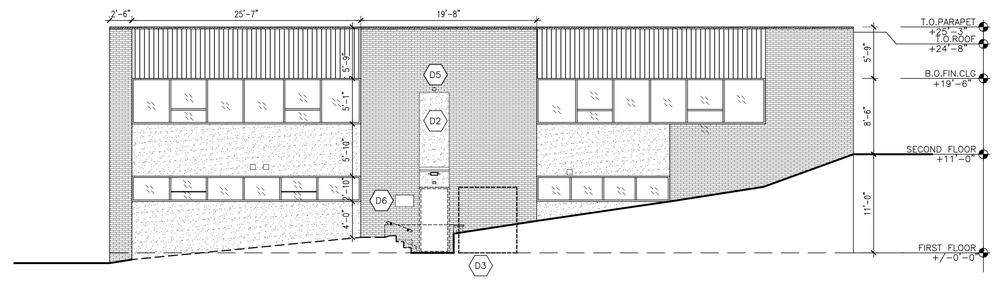

3 DEMOLITION EAST SIDE ELEVATION

SCALE: 1/8"=1'-0"

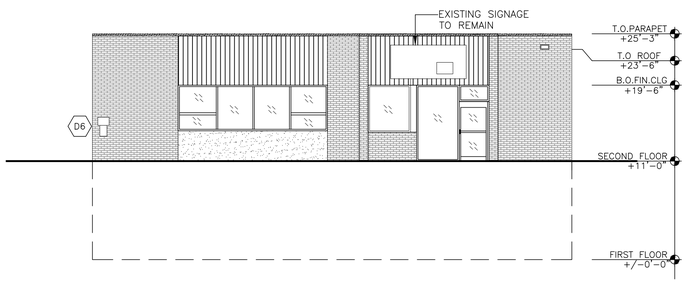

1 DEMOLITION NORTH SIDE ELEVATION

SCALE: 1/8"=1'-0"

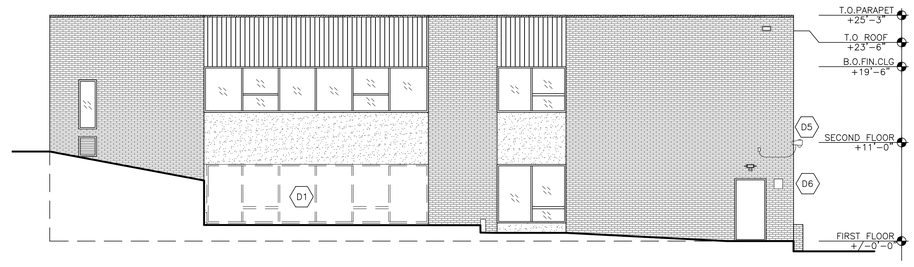

IT IS A VIOLATION OF THE LAW FOR ANY PERSON, UNLESS ACTING UNDER THE DIRECTION OF A LICENSED ARCHITECT, TO ALTER AN ITEM IN ANY WAY.

No.	Date	Revisions
0	02-18-25	RFP SET

Drawn by	MAL/JR
Checked by	MS/JC
Project No.	40034G
Scale	AS NOTED
Date	03-20-23

Mechanical, Electrical & Structural Engineer: GREENMAN PEDERSEN, INC
2 EXECUTIVE BOULEVARD
SUITE 202
SUFFERN, NY 10901

Civil Engineer: ATZL, NASHER, & ZIGLER
234 North Main Street
New City, NY 10956

RENOVATION OF ROCKLAND GREEN ADMINISTRATIVE HEADQUARTERS AND CONSTRUCTION OF AN IMMERSIVE THEATRE EXPERIENCE

TOWN OF CLARKSTOWN
COUNTY OF ROCKLAND

170 MAIN STREET
NANUET, NY 10954

MICHAEL SHILALE ARCHITECTS, L.L.P.
140 Park Avenue New City, NY 10956 Tel 845-708-9200
www.shilale.com

© COPYRIGHT, MICHAEL SHILALE ARCHITECTS, ALL RIGHTS RESERVED.

Drawing Title
EXISTING/DEMO ELEVATIONS

Drawing No.
D-200

EXISTING PARTITION

EXISTING PARTITION TO BE REMOVED

NEW PARTITION (SEE PARTITION LEGEND A-600)

NEW DOOR

EXISTING DOOR

EXISTING COLUMN TO REMAIN

LEGEND

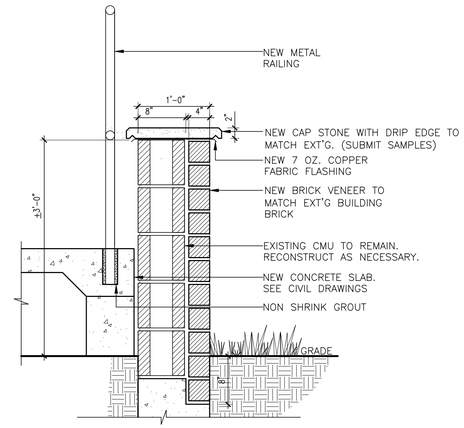

2 SECTION AT MASONRY RECONSTRUCTION

SCALE: 1"=1'-0"

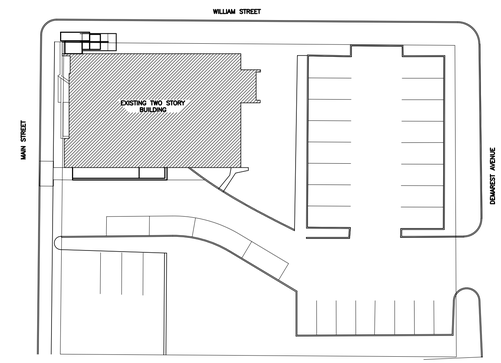

0 1/2 1
IF THIS BAR DOES NOT MEASURE 1", THEN DRAWING IS NOT TO FULL SCALE

PLAN NORTH

KEY PLAN

A1 INSTALL NEW FIRE RATED WALL WITH STC RATING 60. SEE WALL TYPE DESIGNATIONS.

A2 ALIGN NEW WALL TO THE CENTERLINE OF EXISTING MULLION.

A3 AS PER ALTERNATE NO.3 PROVIDE GLASS WALLS AND DOORS WITH OBSCURE GLASS AT SECOND FLOOR CONFERENCE ROOM.

A4 INFILL EXISTING OPENING WHERE DOOR WAS REMOVED WITH CMU AND BRICK VENEER.

A5 NEW STUCCO FINISH ON OUTSIDE WALL. INSTALL NEW METAL FRAMING AND 1/2" THICK GYPSUM BOARD ON INSIDE FACE TO MATCH EXISTING.

A6 PROVIDE AND INSTALL DOUBLE ROLLING WINDOW SHADES.

A7 INFILL EXISTING OPENING WHERE WINDOW WAS REMOVED WITH FRAMING AND BRICK

A8 RECONSTRUCT EXISTING MASONRY WALL AS PER DETAIL 2/A-101

A9 INSTALL BOTTLE FILLER B-1.

A10 REFRAME EXISTING WALL TO FILL IN EXISTING WINDOW.

A11 NEW 3X3 FLOOR SLOP SINK. SEE PLUMBING DRAWING.

A12 NEW ELECTRIC PANEL. SEE ELECTRICAL DRAWINGS.

A13 EXTERIOR ROOF ACCESS LADDER. SEE DETAIL 5/A-531.

A14 EXISTING BRICK COLUMN TO RECEIVE NEW PLYWOOD. SEE DETAIL 2/630

A15 INSTALL FILM ON THE INTERIOR SIDE OF WINDOW TO BLOCK VIEW.

A16 PAINT EXT'G FIN TUBE COVERS

A17 PROVIDE AND INSTALL NEW KITCHENETTE CABINETS AND COUNTER TOPS AS PER ALLOWANCE NO. 4

A18 FRAME OUT EXT'G WALL TO 6" THICK FOR PLUMBING. PROVIDE BLOCKING FOR WALL HUNG FIXTURES.

KEY NOTES

1. ALL PLAN DIMENSIONS ARE NOMINAL U.O.N. DIMENSIONS TO THE FINISHED FACE OF AN ELEMENT OR WALL WILL BE DESIGNATED AITH AN "F" AS SHOWN.
2. G.C. TO VERIFY ALL DEIMENSIONS IN THE FIELD AND IS TO NOTIFY ARCHITECT IF THERE IS ANY DISCREPENCIES
3. G.C. TO PROVIDE FIRESTOPPING AT ALL PENETRATIONS.
4. G.C. TO COORDINATE ALL FIXTURE LOCATIONS WITH WHIRLWIND CREATIVE PRIOR TO INSTALLATION
5. G.C TO PROVIDE 12 FIRE EXTINGUISHER AND CABINETS FOR ENTIRE BUILDING. LOCATION TO BE DETERMINED ON SITE BY OWNER. SEE A-101
6. EACH DOOR SHALL RECEIVE A 6"X6" SIGN IDENTIFYING ROOM NUMBER IN PRINT AND BRAILLE DESIGNATION. SIGNS BY WWW.MYDOORSIGNS.COM MODEL SE-2732. COLOR TO BE DARK BROWN WITH GOLD LETTERING.

GENERAL NOTES

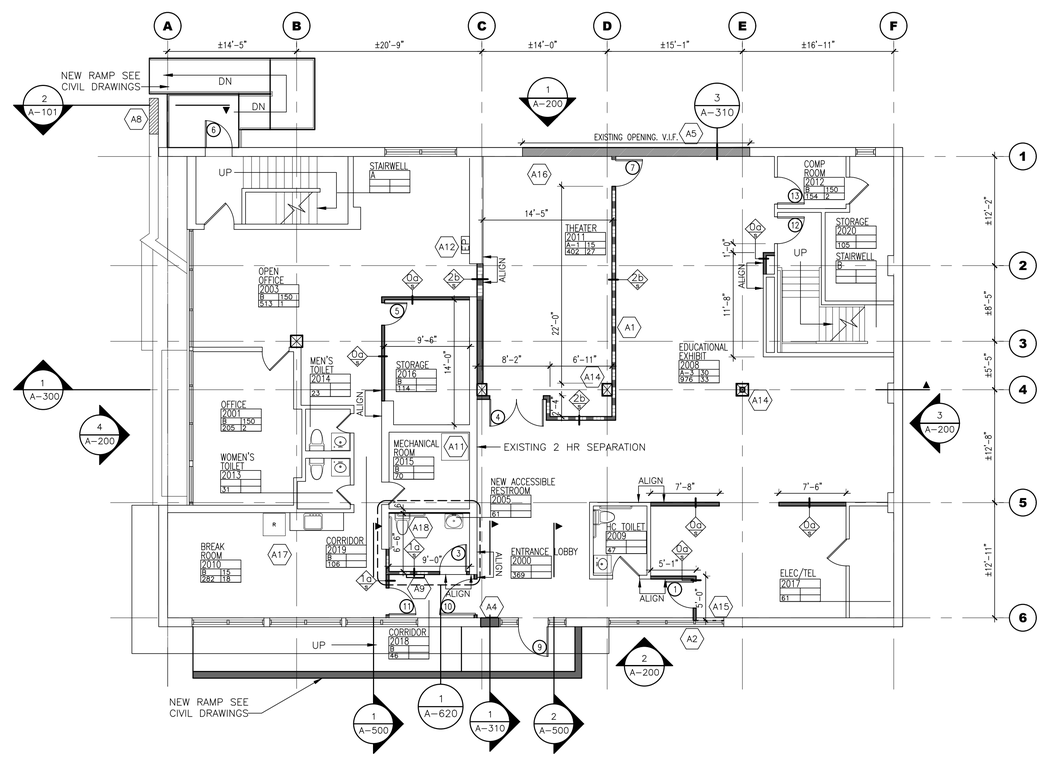

1 FIRST FLOOR PLAN

SCALE: 1/8"=1'-0"

PLAN NORTH

IT IS A VIOLATION OF THE LAW FOR ANY PERSON, UNLESS ACTING UNDER THE DIRECTION OF A LICENSED ARCHITECT, TO ALTER AN ITEM IN ANY WAY.

No.	Date	Revisions
0	02-18-25	RFP SET

Drawn by MAL/JR
Checked by MS/JC
Project No. 40034G
Scale AS NOTED
Date 03-20-23

GREENMAN PEDERSEN, INC
2 EXECUTIVE BOULEVARD
SUITE 202
SUFFERN, NY 10901

Mechanical, Electrical & Structural Engineer:

ATZL, NASHER, & ZIGLER
234 North Main Street
New City, NY 10956

Civil Engineer:

RENOVATION OF ROCKLAND GREEN ADMINISTRATIVE HEADQUARTERS AND CONSTRUCTION OF AN IMMERSIVE THEATRE EXPERIENCE

TOWN OF CLARKSTOWN
COUNTY OF ROCKLAND

170 MAIN STREET
NYACK, NY 10994

MICHAEL SHILALE ARCHITECTS, L.L.P.
140 Park Avenue New City, NY 10956 Tel 845-708-9200
www.shilale.com

© COPYRIGHT, MICHAEL SHILALE ARCHITECTS, ALL RIGHTS RESERVED.

Drawing Title
FIRST FLOOR PLAN

Drawing No.
A-101

EXISTING PARTITION

NEW PARTITION (SEE PARTITION LEGEND A-600)

NEW DOOR

EXISTING DOOR

EXISTING COLUMN TO REMAIN

NEW LADDER

LEGEND

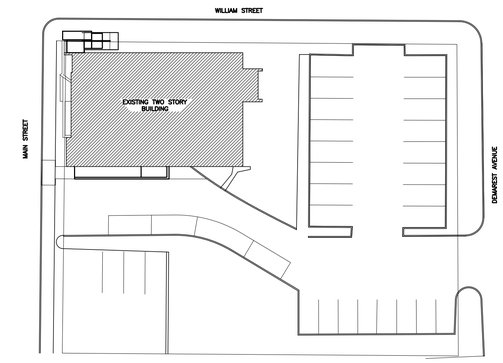

0 1/2 1
IF THIS BAR DOES NOT MEASURE 1" THEN DRAWING IS NOT TO FULL SCALE

PLAN NORTH

KEY PLAN

A1 INSTALL NEW FIRE RATED WALL WITH STC RATING 60. SEE WALL TYPE DESIGNATIONS.

A2 ALIGN NEW WALL TO THE CENTERLINE OF EXISTING MULLION.

A3 AS PER ALTERNATE NO.3 PROVIDE GLASS WALLS AND DOORS WITH OBSCURE GLASS AT SECOND FLOOR CONFERENCE ROOM.

A4 INFILL EXISTING OPENING WHERE DOOR WAS REMOVED WITH CMU AND BRICK VENEER.

A5 NEW STUCCO FINISH ON OUTSIDE WALL. INSTALL NEW METAL FRAMING AND 1/2" THICK GYPSUM BOARD ON INSIDE FACE TO MATCH EXISTING.

A6 PROVIDE AND INSTALL DOUBLE ROLLING WINDOW SHADES.

A7 INFILL EXISTING OPENING WHERE WINDOW WAS REMOVED WITH FRAMING AND BRICK

A8 RECONSTRUCT EXISTING MASONRY WALL AS PER DETAIL 2/A-101

A9 INSTALL BOTTLE FILLER B-1.

A10 REFRAME EXISTING WALL TO FILL IN EXISTING WINDOW.

A11 NEW 3X3 FLOOR SLOP SINK. SEE PLUMBING DRAWING.

A12 NEW ELECTRIC PANEL. SEE ELECTRICAL DRAWINGS.

A13 EXTERIOR ROOF ACCESS LADDER. SEE DETAIL 5/A-531.

A14 EXISTING BRICK COLUMN TO RECEIVE NEW PLYWOOD. SEE DETAIL 2/630

A15 INSTALL FILM ON THE INTERIOR SIDE OF WINDOW TO BLOCK VIEW.

A16 PAINT EXT'G FIN TUBE COVERS

A17 PROVIDE AND INSTALL NEW KITCHENETTE CABINETS AND COUNTER TOPS AS PER ALLOWANCE NO. 4

A18 FRAME OUT EXT'G WALL TO 6" THICK FOR PLUMBING. PROVIDE BLOCKING FOR WALL HUNG FIXTURES.

KEY NOTES

1. ALL PLAN DIMENSIONS ARE NOMINAL U.O.N. DIMENSIONS TO THE FINISHED FACE OF AN ELEMENT OR WALL WILL BE DESIGNATED AITH AN 'F' AS SHOWN.
2. G.C. TO VERIFY ALL DEIMENSIONS IN THE FIELD AND IS TO NOTIFY ARCHITECT IF THERE IS ANY DISCREPENCIES
3. G.C. TO PROVIDE FIRESTOPPING AT ALL PENETRATIONS.
4. G.C. TO COORDINATE ALL FIXTURE LOCATIONS WITH WHIRLWIND CREATIVE PRIOR TO INSTALLATION
5. G.C TO PROVIDE 12 FIRE EXTINGUISHER AND CABINETS FOR ENTIRE BUILDING. LOCATION TO BE DETERMINED ON SITE BY OWNER. SEE A-101
6. EACH DOOR SHALL RECEIVE A 6"X6" SIGN IDENTIFYING ROOM NUMBER IN PRINT AND BRAILLE DESIGNATION. SIGNS BY WWW.MYDOORSIGNS.COM MODEL SE-2732. COLOR TO BE DARK BROWN WITH GOLD LETTERING.

GENERAL NOTES

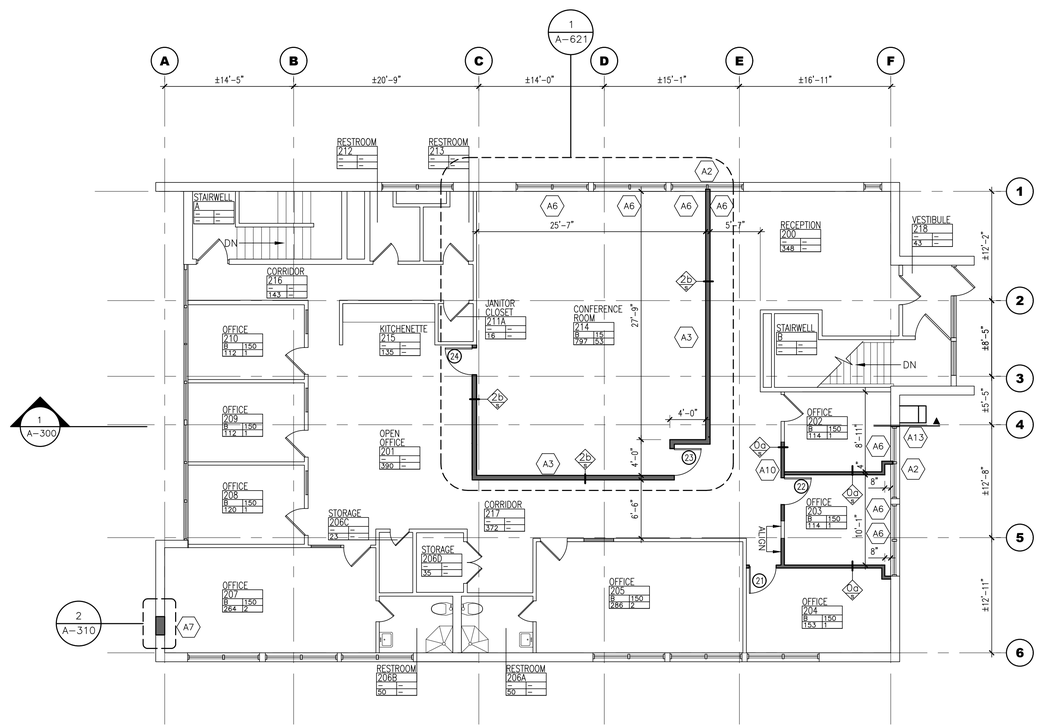

1 SECOND FLOOR PLAN

SCALE: 1/8"=1'-0"

PLAN NORTH

IT IS A VIOLATION OF THE LAW FOR ANY PERSON, UNLESS ACTING UNDER THE DIRECTION OF A LICENSED ARCHITECT, TO ALTER AN ITEM IN ANY WAY.

No.	Date	Revisions
0	02-18-25	RFP SET

Drawn by MAL/JR
Checked by MS/JC
Project No. 40034G
Scale AS NOTED
Date 03-20-23

Mechanical, Electrical & Structural Engineer: GREENMAN PEDERSEN, INC 2 EXECUTIVE BOULEVARD SUFFERN, NY 10901

Civil Engineer: ATZL, NASHER, & ZIGLER 234 North Main Street New City, NY 10956

RENOVATION OF ROCKLAND GREEN ADMINISTRATIVE HEADQUARTERS AND CONSTRUCTION OF AN IMMERSIVE THEATRE EXPERIENCE

172 MAIN STREET HAVERSTRAW, NY 10994

TOWN OF CLARKSTOWN COUNTY OF ROCKLAND

MICHAEL SHILALE ARCHITECTS, L.L.P.
140 Park Avenue New City, NY 10956 Tel 845-708-9200
www.shilale.com

© COPYRIGHT, MICHAEL SHILALE ARCHITECTS, ALL RIGHTS RESERVED.

Drawing Title
SECOND FLOOR PLAN

Drawing No.
A-102

EXISTING THROUGH WALL LOUVER

EXISTING THROUGH WALL SCUPPER

EXISTING PIPE PENETRATION

EXISTING ROOF DRAIN

EXISTING VENTILATOR OR MECHANICAL PENETRATION

NEW SKYLIGHT

EQ EXISTING EQUIPMENT PAD

EXISTING SMOKE HATCH

EXISTING LADDER

EXISTING CHIMNEY

EXISTING EXTERIOR WALL OF BUILDING

EXISTING AREA DIVIDER

EXISTING MECHANICAL EQUIPMENT

ROOF VENT

EXISTING FLUE VENT

NEW WALKWAY

EXISTING FRESH AIR INTAKE

00 NEW DOOR NUMBER

RAISE EXISTING FLASHING

OVERHEAD PROTECTION

J JUNCTION BOX

SECURITY CAMERA

LEGEND

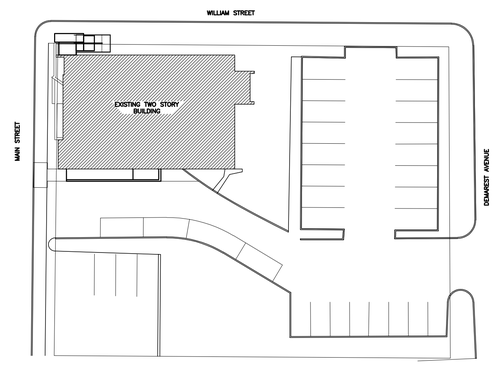

0 1/2 1
IF THIS BAR DOES NOT MEASURE 1, THEN DRAWING IS NOT TO FULL SCALE

PLAN NORTH

KEY PLAN

A20 INSTALL NEW EPDM ROOFING AND INSULATION SYSTEM ON EXISTING ROOF DECK. SEE DETAIL 1/A-530

A21 INSTALL NEW FLASHING AND COPING. RUN EPDM FROM ROOF, UP PARAPET WALL, AND UNDER METAL COPING. FASCIA COLOR BY ARCH. SEE DETAIL 5/A-530.

A22 EXISTING SCUPPER TO BE RAISED TO ACCOMMODATE NEW INSULATION THICKNESS.

A23 INSTALL NEW 30"X30" EPDM WALKWAY PADS.

A24 NEW CONDENSING UNITS ON RAILS. SEE MECHANICAL DRAWINGS

A25 PATCH EXISTING ROOF WHERE RTU/EQUIPMENT AND RELATED PIPE PENETRATIONS WERE REMOVED. SEE DETAIL 3/A-531.

A26 NEW ROOF CURBS WITH CRICKET FOR NEW DOAS UNIT. CONTRACTOR TO VERIFY OPENINGS IN FIELD AND COORDINATE WITH MECHANICAL UNIT SIZES ON MECHANICAL DRAWINGS.

ROOF KEY NOTES

1. PROVIDE INSULATION AS NEEDED TO ENSURE A MINIMUM R-VALUE 30.
2. DRAWINGS ONLY SHOW PENETRATIONS THAT HAVE BEEN DESIGNATED TO RECEIVE POLYISOCYANURATE CRICKETS OR PENETRATIONS THAT OBSTRUCT POSITIVE DRAINAGE PATTERNS. ROOFER TO SUPPLY ALL OTHER REQUIRED CRICKET MATERIAL.
3. ROOFER TO TRANSITION PERIMETER CONDITIONS AS REQUIRED.
4. ROOFER TO PROVIDE TAPERED EDGE ROOF SUMPS AS REQUIRED.

ROOF NOTES

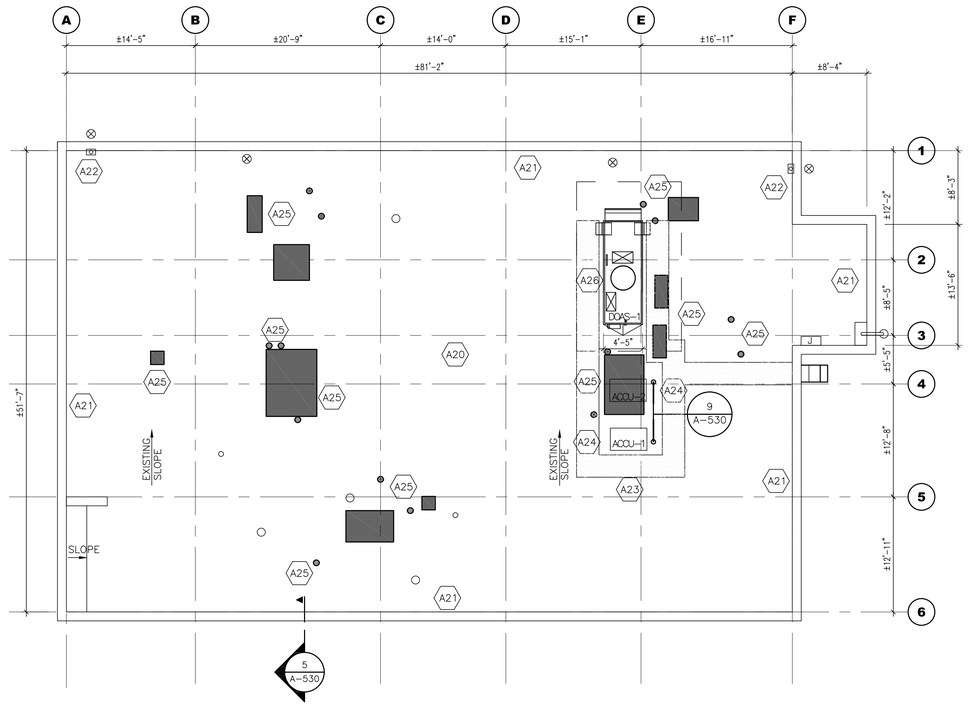

PLAN NORTH

1 ROOF PLAN
SCALE: 1/8"=1'-0"

IT IS A VIOLATION OF THE LAW FOR ANY PERSON, UNLESS ACTING UNDER THE DIRECTION OF A LICENSED ARCHITECT, TO ALTER AN ITEM IN ANY WAY.

No.	Date	Revisions
0	02-18-25	RFP SET

Drawn by	MAL/JR
Checked by	MS/JC
Project No.	40034G
Scale	AS NOTED
Date	03-20-23

Mechanical, Electrical & Structural Engineer: GREENMAN PEDERSEN, INC
2 EXECUTIVE BOULEVARD
SUITE 202
SUFFERN, NY 10901

Civil Engineer: ATZL, NASHER, & ZIGLER
234 North Main Street
New City, NY 10956

RENOVATION OF ROCKLAND GREEN ADMINISTRATIVE HEADQUARTERS AND CONSTRUCTION OF AN IMMERSIVE THEATRE EXPERIENCE

172 MAIN STREET
NYACK, NY 10994

TOWN OF CLARKSTOWN
COUNTY OF ROCKLAND

MICHAEL SHILALE ARCHITECTS, L.L.P.
140 Park Avenue New City, NY 10956 Tel 845-708-9200
www.shilale.com

© COPYRIGHT, MICHAEL SHILALE ARCHITECTS, ALL RIGHTS RESERVED.

Drawing Title
ROOF PLAN

Drawing No.
A-103

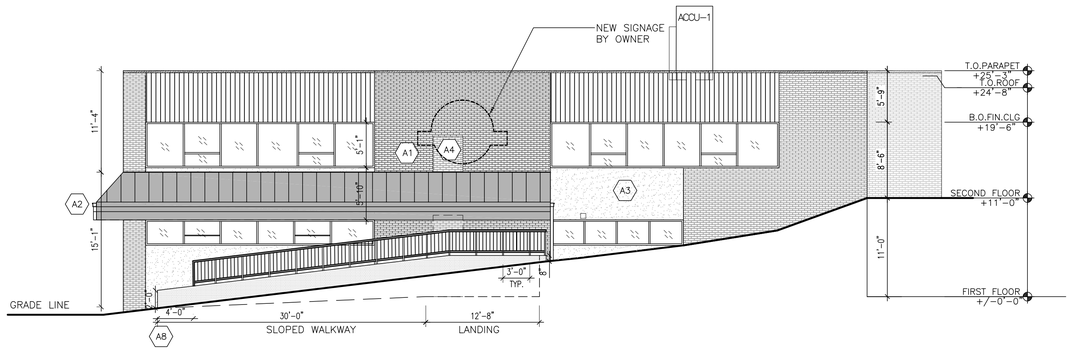

5 SOUTH SIDE ELEVATION WITH SLOPED WALKWAY

SCALE: 1/8"=1'-0"

A1	APPLY POTASSIUM SILICATE ON ALL BRICK. PREPARE AS PER MANUFACTURER'S STANDARD BEFORE APPLYING COATING.
A2	NEW AWNING. SEE DETAIL 1/A-500.
A3	PAINT EXISTING STUCCO SIDING.
A4	NEW BRICK VENEER. SAW TOOTH NEW BRICK WITH EXISTING BRICK.
A5	NEW STOREFRONT ENTRY. SEE A-610 DOOR/HARDWARE SCHEDULE
A6	NEW MASONRY WALL WITH COPING. SEE DETAIL 2/A-101.
A7	NEW STUCCO FINISH.
A8	NEW CONCRETE RETAINING WALL WITH GUARDRAIL. SEE DETAIL 1/A-500

KEY NOTES

BRICK VENEER
SIDING
STUCCO
NEW STUCCO
DRYVIT DIRECT

LEGEND

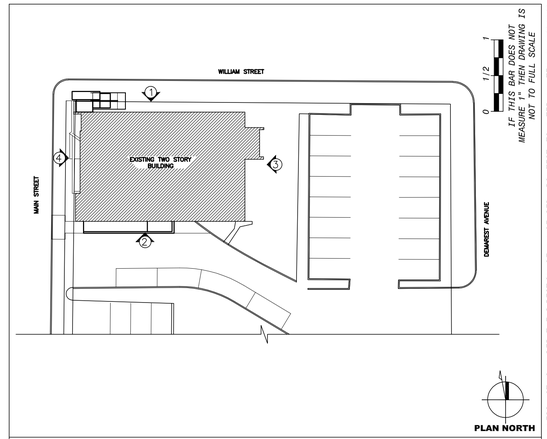

KEY PLAN

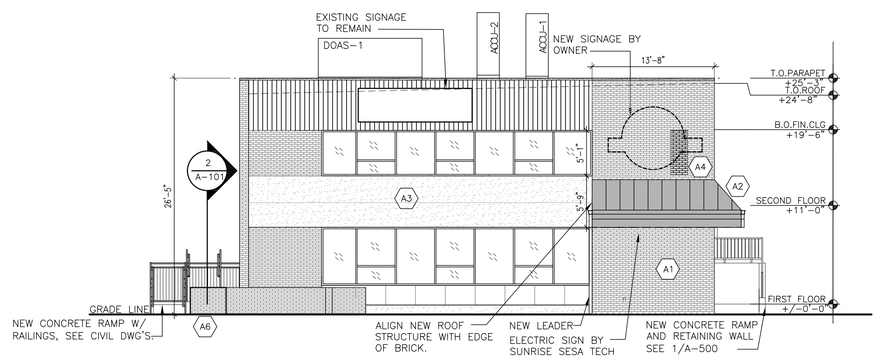

4 WEST SIDE ELEVATION

SCALE: 1/8"=1'-0"

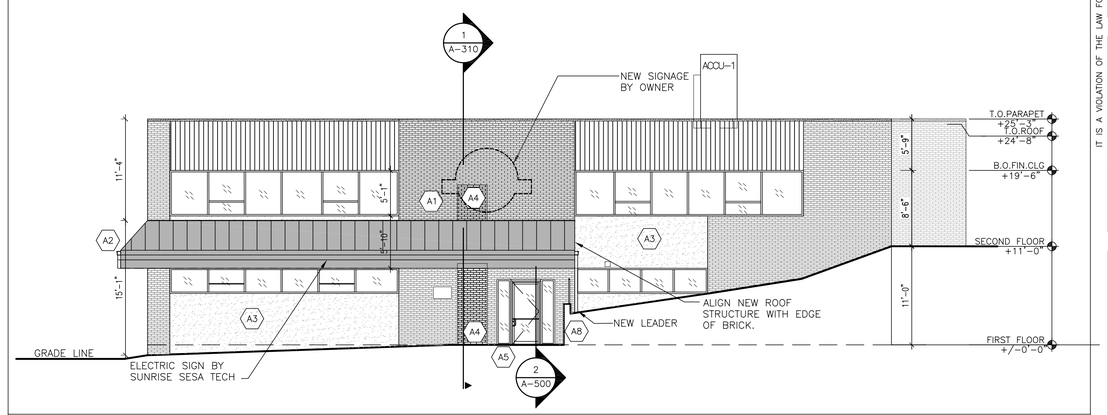

2 SOUTH SIDE ELEVATION

SCALE: 1/8"=1'-0"

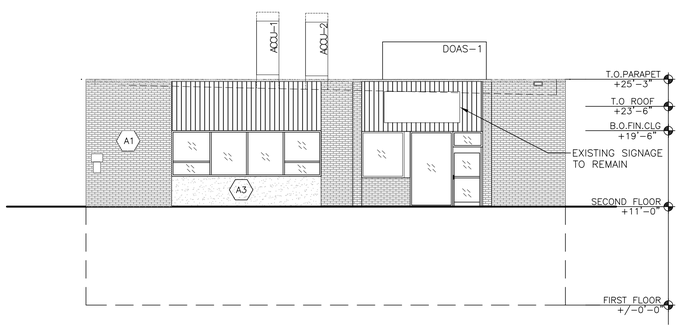

3 EAST SIDE ELEVATION

SCALE: 1/8"=1'-0"

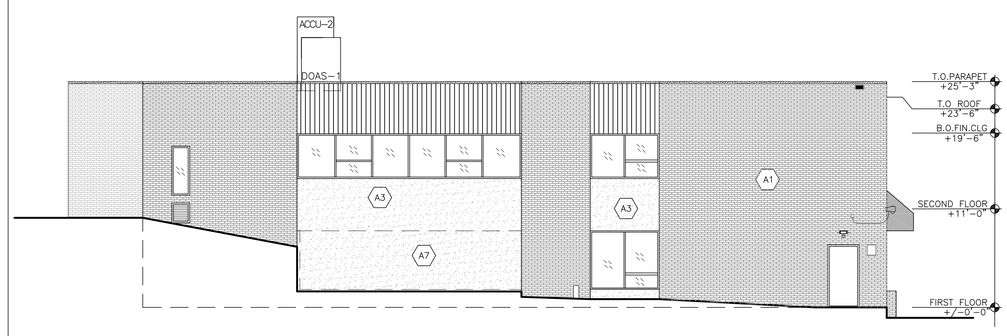

1 NORTH SIDE ELEVATION

SCALE: 1/8"=1'-0"

No.	Date	Revisions
0	02-18-25	RFP SET

IF THIS BAR DOES NOT MEASURE 1" THEN DRAWING IS NOT TO FULL SCALE

IT IS A VIOLATION OF THE LAW FOR ANY PERSON, UNLESS ACTING UNDER THE DIRECTION OF A LICENSED ARCHITECT, TO ALTER AN ITEM IN ANY WAY.

Drawn by	MAL/JR
Checked by	MS/JC
Project No.	400346
Scale	AS NOTED
Date	03-20-23

Mechanical, Electrical, & Structural Engineer: GREENMAN PEDERSEN, INC
2 EXECUTIVE BOULEVARD
SUITE 202
SUFFERN, NY 10901

Civil Engineer: ATZL, NASHER, & ZIGLER
224 North Main Street
New City, NY 10956

RENOVATION OF ROCKLAND GREEN ADMINISTRATIVE HEADQUARTERS AND CONSTRUCTION OF AN IMMERSIVE THEATRE EXPERIENCE

172 MAIN STREET
NYACK, NY 10994

TOWN OF CLARKSTOWN
COUNTY OF ROCKLAND

MICHAEL SHILALE ARCHITECTS, L.L.P.
140 Park Avenue New City, NY 10956 Tel 845-708-9200
www.shilale.com

© COPYRIGHT, MICHAEL SHILALE ARCHITECTS, ALL RIGHTS RESERVED.

Drawing Title
PROPOSED ELEVATIONS

Drawing No.
A-200

NEW SOLAR PANEL

LEGEND

GENERAL NOTES

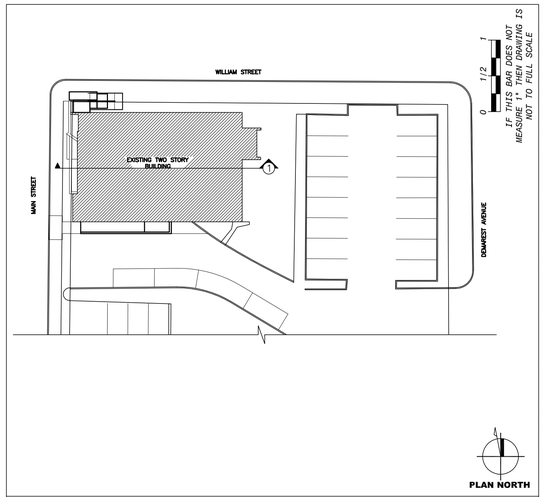

KEY PLAN

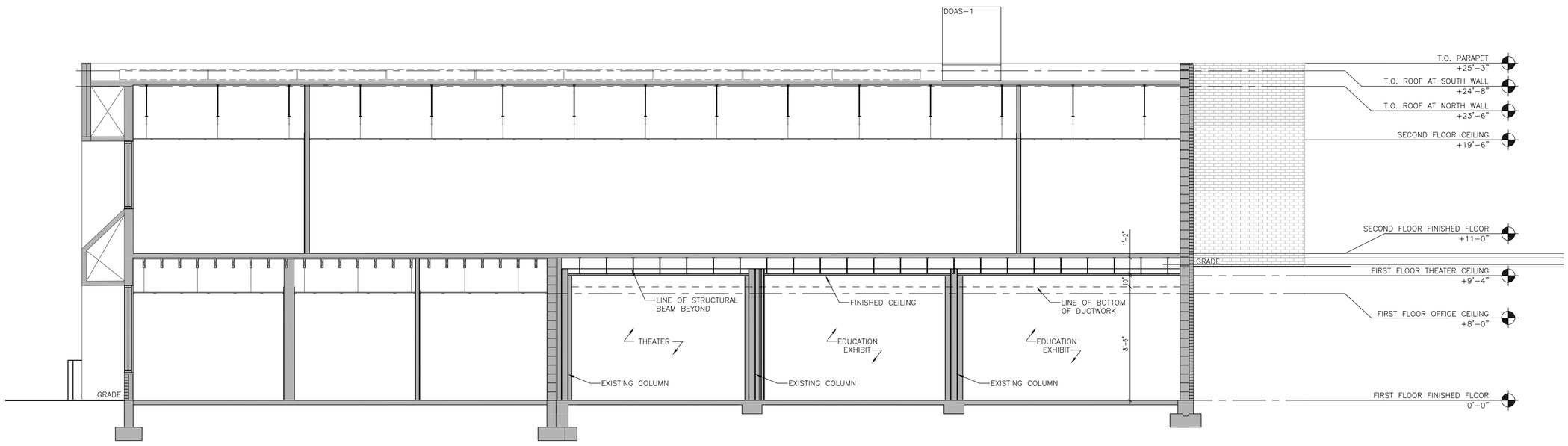

1 E-W SECTION
SCALE: 1/4"=1'-0"

IT IS A VIOLATION OF THE LAW FOR ANY PERSON, UNLESS ACTING UNDER THE DIRECTION OF A LICENSED ARCHITECT, TO ALTER AN ITEM IN ANY WAY.

No.	Date	Revisions
0	02-18-25	RFP SET

Drawn by	MAL/JR
Checked by	MS/JC
Project No.	40034G
Scale	AS NOTED
Date	03-20-23

Mechanical, Electrical & Structural Engineer:
GREENMAN PEDERSEN, INC
2 EXECUTIVE BOULEVARD
SUITE 202
SUFFERN, NY 10901

Civil Engineer:
ATZL, NASHER, & ZIGLER
234 North Main Street
New City, NY 10956

RENOVATION OF ROCKLAND GREEN ADMINISTRATIVE HEADQUARTERS AND CONSTRUCTION OF AN IMMERSIVE THEATRE EXPERIENCE

172 MAIN STREET
NANUET, NY 10954

TOWN OF CLARKSTOWN
COUNTY OF ROCKLAND

MICHAEL SHILALE ARCHITECTS, L.L.P.
140 Park Avenue New City, NY 10956 Tel 845-708-9200
www.shilale.com

© COPYRIGHT, MICHAEL SHILALE ARCHITECTS, ALL RIGHTS RESERVED.

Drawing Title
BUILDING SECTION

Drawing No.
A-300

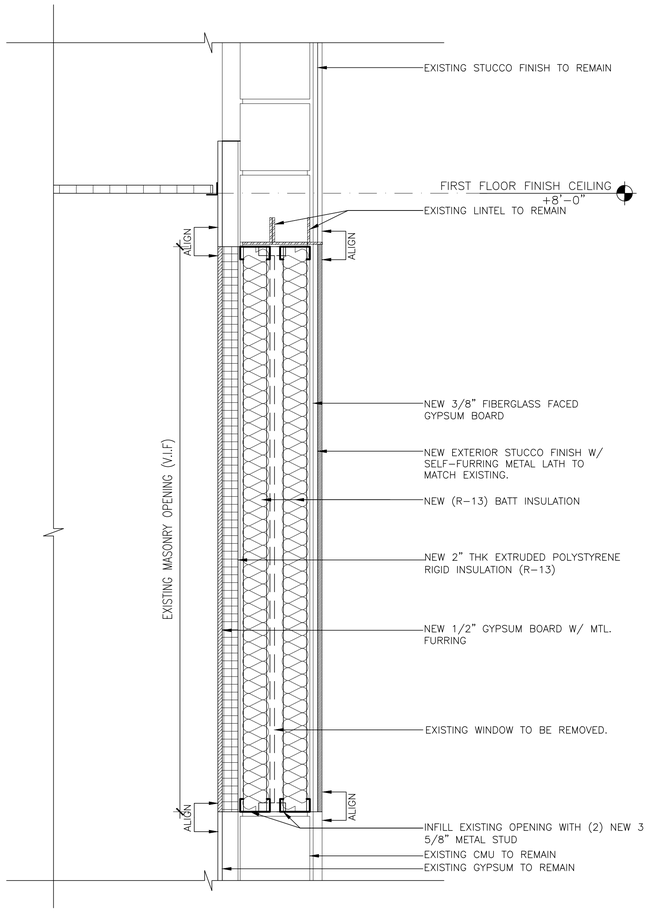

3 SECTION AT WINDOW INFILL ON FIRST FLOOR

SCALE: 1 1/2"=1'-0"

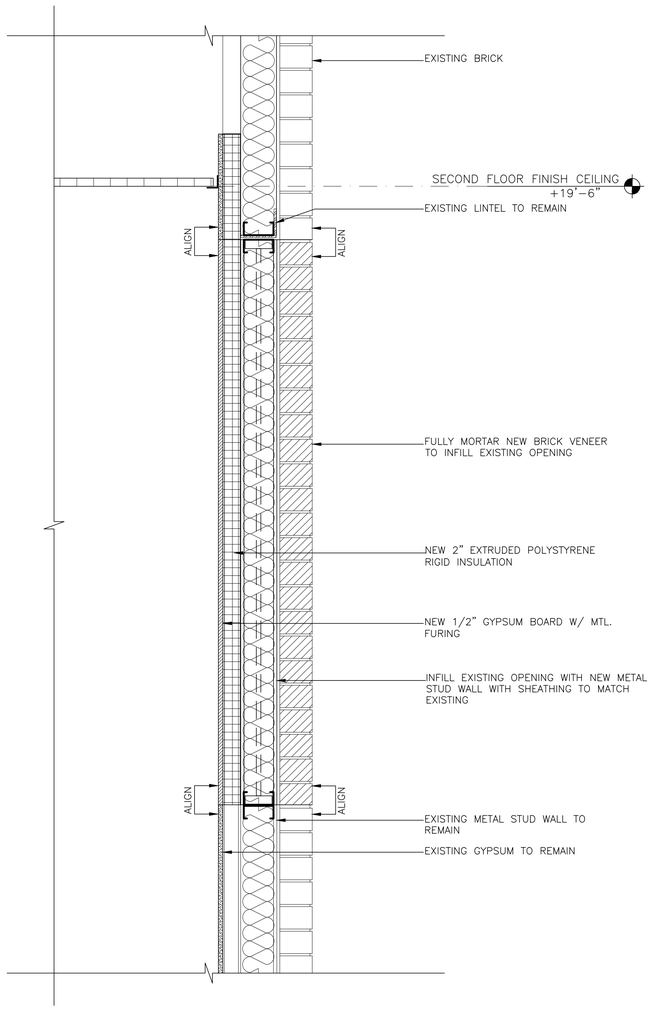

2 SECTION @ WINDOW INFILL ON SECOND FLOOR

SCALE: 1 1/2"=1'-0"

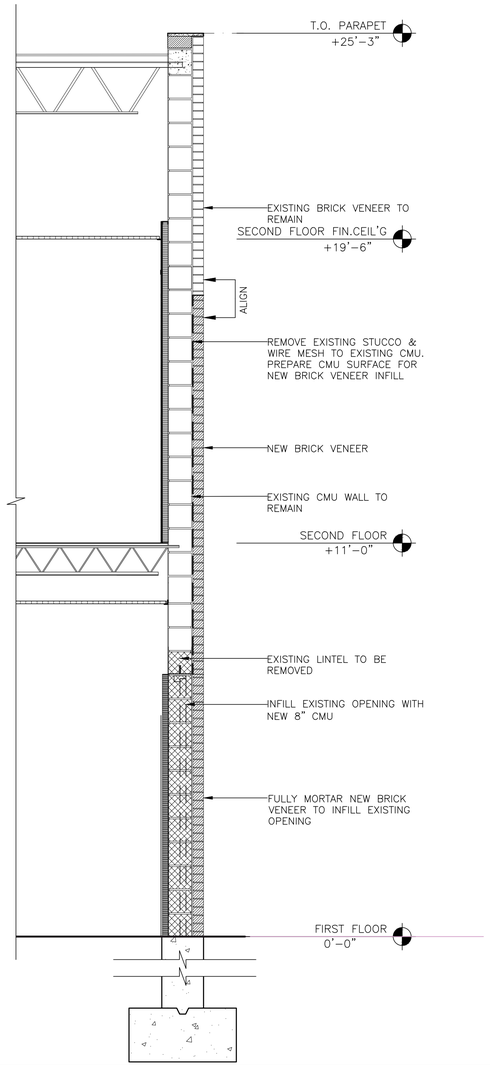

1 WALL SECTION WITH INFILL

SCALE: 1/2"=1'-0"

0 1/2 1
IF THIS BAR DOES NOT MEASURE 1, THEN DRAWING IS NOT TO FULL SCALE

No.	Date	Revisions
0	02-14-25	RFP SET

IT IS A VIOLATION OF THE LAW FOR ANY PERSON, UNLESS ACTING UNDER THE DIRECTION OF A LICENSED ARCHITECT, TO ALTER AN ITEM IN ANY WAY.

Drawn by MAL/JR
Checked by MS/JC
Project No. 40034G
Scale AS NOTED
Date 03-20-23

Mechanical, Electrical & Structural Engineer: GREENMAN PEDERSEN, INC
2 EXECUTIVE BOULEVARD
SUITE 202
SUFFERN, NY 10901

Civil Engineer: ATZL, NASHER, & ZIGLER
234 North Main Street
New City, NY 10956

RENOVATION OF ROCKLAND GREEN ADMINISTRATIVE HEADQUARTERS AND CONSTRUCTION OF AN IMMERSIVE THEATRE EXPERIENCE

172 MAIN STREET
NYACK, NY 10994

TOWN OF CLARKSTOWN
COUNTY OF ROCKLAND

MICHAEL SHILALE ARCHITECTS, L.L.P.
140 Park Avenue New City, NY 10956 Tel 845-708-9200
www.shilale.com

© COPYRIGHT, MICHAEL SHILALE ARCHITECTS, ALL RIGHTS RESERVED.

Drawing Title **EXTERIOR WALL SECTIONS**

Drawing No. **A-310**

NEW GYPSUM BOARD CLG.

NEW K13 SPRAY ON CLG.

2' x 2' SUSPENDED CLG GRID

2' x 4' SUSPENDED CLG GRID

EXIT SIGN ARROW INDICATES DIRECTION OF TRAVEL. SHADED PORTION INDICATES ILLUMINATED FACE.

EXIT SIGN/EMERGENCY LIGHT WITH SELF-CONTAINED BATTERY BACKUP.

EMERGENCY LIGHT WITH SELF-CONTAINED BATTERY BACKUP.

2'X2' CEILING EMERGENCY LIGHT WITH BATTERY BACKUP

RETURN AIR CEILING DIFFUSER

SUPPLY AIR CEILING DIFFUSER

CEILING RECESSED DOWNLIGHT

WALL MOUNTED LIGHT FIXTURE

2' x 2' RECESSED LIGHT FIXTURE

2' x 4' RECESSED LIGHT FIXTURE

1' x 4' LIGHT FIXTURE

4" x 4' LIGHT FIXTURE

4" x 2' LIGHT FIXTURE

EXPANSION JOINT

TSL TRACKING LIGHTING 8'-6" AFF

UNISTRUT CHANNEL 1-5/8" x 1-5/8" 9'-0" AFF

6" x 4' LIGHT FIXTURE

STARTING POINT OF CELING TILE

LEGEND

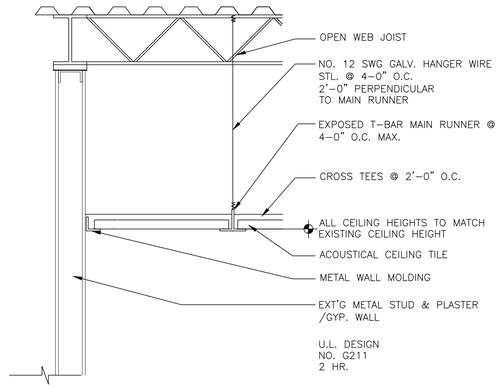

3 ACT CEILING DETAIL (TYP.)

SCALE: 1/2"=1'-0"

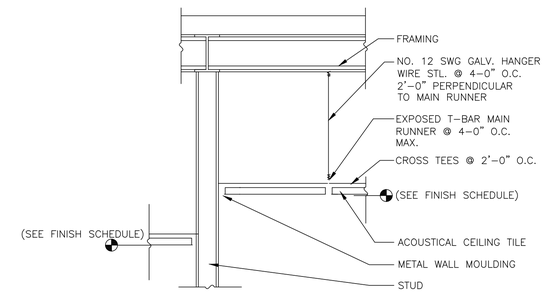

2 ACT CEILING DETAIL (TYP.)

SCALE: N.T.S.

IF THIS BAR DOES NOT MEASURE 1", THEN DRAWING IS NOT TO FULL SCALE

01 INSTALL NEW ACOUSTICAL 2x2 CEILING GRID AND LIGHT FIXTURES (BASE BID).

02 INSTALL NEW CEILING LINEAR UNIT WITH 18"X18" ACCESS HATCH. SEE MECHANICAL DRAWINGS FOR CEILING UNIT DETAILS

03 INSTALL NEW GYPSUM BOARD CEILING.

04 INSTALL NEW GYPSUM BOARD CEILING WITH K13 SPRAY. SEE DETAIL 1/A-630 FOR CEILING GYPSUM CONSTRUCTION.

KEY NOTES

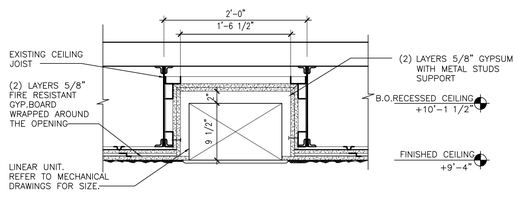

5 CEILING UNIT CROSS SECTION

SCALE: 1"=1'-0"

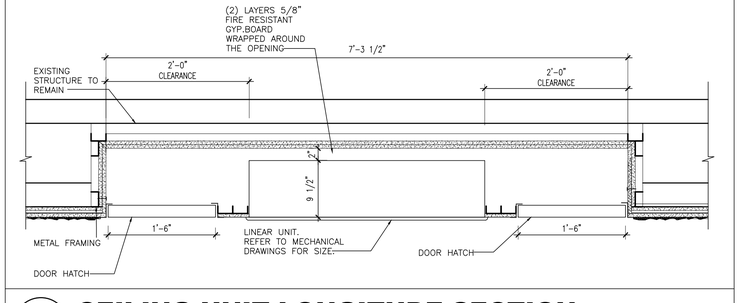

4 CEILING UNIT LONGITUDE SECTION

SCALE: 1"=1'-0"

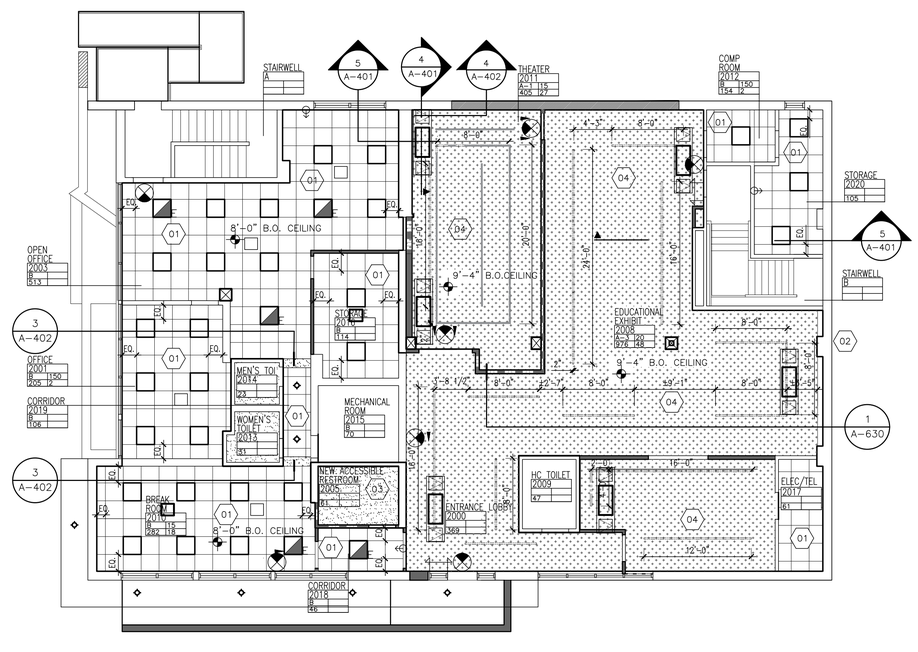

1 FIRST FLOOR REFLECTED CEILING PLAN

SCALE: 1/8"=1'-0"

PLAN NORTH

IT IS A VIOLATION OF THE LAW FOR ANY PERSON, UNLESS ACTING UNDER THE DIRECTION OF A LICENSED ARCHITECT, TO ALTER AN ITEM IN ANY WAY.

No.	Date	Revisions
0	02-18-25	RFP SET

Drawn by MAL/JR
Checked by MS/JC
Project No. 40034G
Scale AS NOTED
Date 03-20-23

GREENMAN PEDERSEN, INC
2 EXECUTIVE BOULEVARD
SUITE 202
SUFFERN, NY 10901

Mechanical, Electrical & Structural Engineer:

ATZL, NASHER, & ZIGLER
234 North Main Street
New City, NY 10956

Civil Engineer:

RENOVATION OF ROCKLAND GREEN ADMINISTRATIVE HEADQUARTERS AND CONSTRUCTION OF AN IMMERSIVE THEATRE EXPERIENCE

172 MAIN STREET
HAVERSTRAW, NY 10954

TOWN OF CLARKSTOWN
COUNTY OF ROCKLAND

MICHAEL SHILALE ARCHITECTS, L.L.P.
140 Park Avenue New City, NY 10956 Tel 845-708-9200
www.shilale.com

© COPYRIGHT, MICHAEL SHILALE ARCHITECTS, ALL RIGHTS RESERVED.

Drawing Title
FIRST FLOOR REFLECTED CEILING PLAN

Drawing No.
A-401

GYPSUM BOARD CLG.

2' x 2' SUSPENDED CLG GRID

2' x 4' SUSPENDED CLG GRID

EXIT SIGN ARROW INDICATES DIRECTION OF TRAVEL. SHADED PORTION INDICATES ILLUMINATED FACE.

EXIT SIGN/EMERGENCY LIGHT WITH SELF-CONTAINED BATTERY BACKUP.

2'X2' CEILING EMERGENCY LIGHT WITH BATTERY BACKUP

RETURN AIR CEILING DIFFUSER

SUPPLY AIR CEILING DIFFUSER

CEILING RECESSED DOWNLIGHT

WALL MOUNTED LIGHT FIXTURE

2' x 2' RECESSED LIGHT FIXTURE

2' x 4' RECESSED LIGHT FIXTURE

1' x 4' LIGHT FIXTURE

4" x 4' LIGHT FIXTURE

4" x 2' LIGHT FIXTURE

EXPANSION JOINT

TSL TRACKING LIGHTING 8'-6" AFF

UNISTRUT CHANNEL 1-5/8" x 1-5/8" 9'-0" AFF

6" x 4' LIGHT FIXTURE

STARTING POINT OF CELING TILE

LEGEND

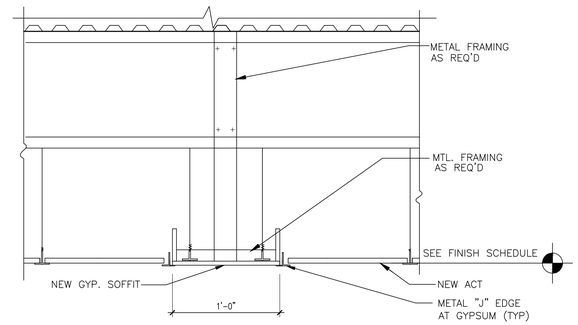

3 SOFFIT DETAIL
SCALE: 1/8"=1'-0"

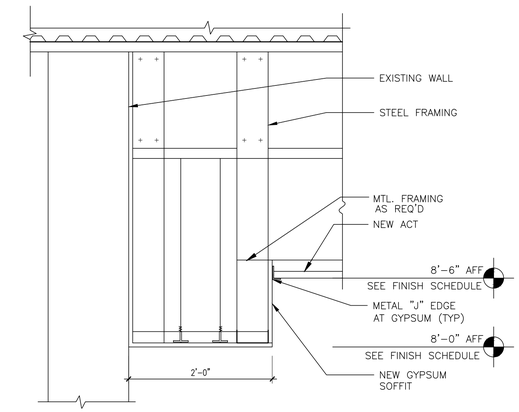

2 DROP SOFFIT
SCALE: 1/8"=1'-0"

01 INSTALL NEW ACOUSTICAL 2x2 CEILING TILE AND LIGHTING (BASE BID).

02 VOID

03 INSTALL NEW GYPSUM BOARD CEILING.

KEY NOTES

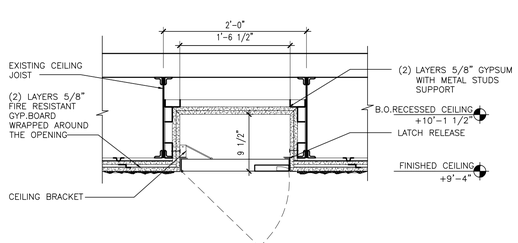

4 CEILING HATCH CROSS SECTION
SCALE: 1"=1'-0"

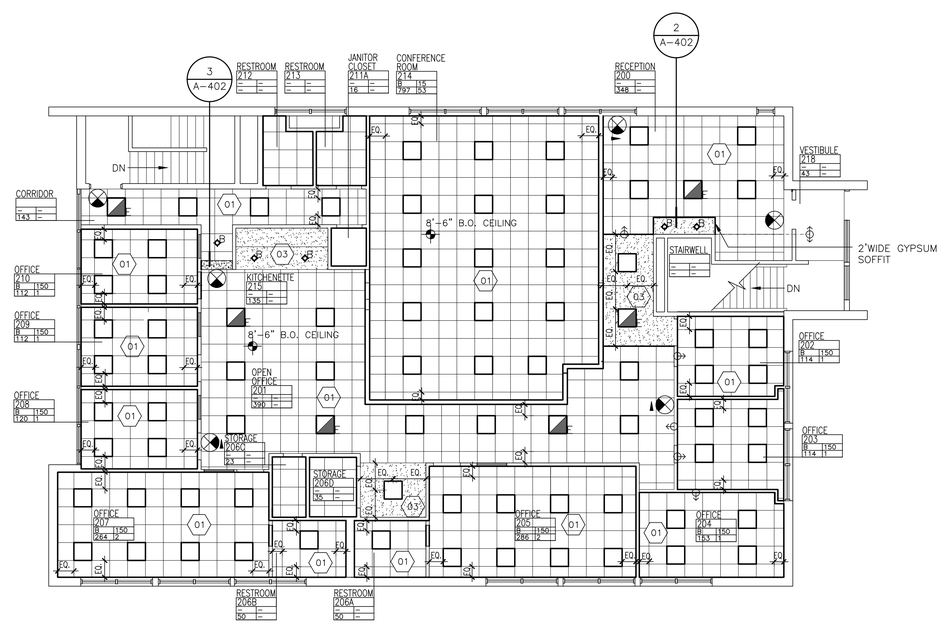

1 SECOND FLOOR REFLECTED CEILING PLAN
SCALE: 1/8"=1'-0"

PLAN NORTH

IF THIS BAR DOES NOT MEASURE 1", THEN DRAWING IS NOT TO FULL SCALE

No.	Date	Revisions
0	02-18-25	RFP SET

IT IS A VIOLATION OF THE LAW FOR ANY PERSON, UNLESS ACTING UNDER THE DIRECTION OF A LICENSED ARCHITECT, TO ALTER AN ITEM IN ANY WAY.

Drawn by MAL/JR
Checked by MS/JC
Project No. 40034G
Scale AS NOTED
Date 03-20-23

GREENMAN PEDERSEN, INC
2 EXECUTIVE BOULEVARD
SUITE 202
SUFFERN, NY 10901

Mechanical, Electrical & Structural Engineer:

ATZL, NASHER, & ZIGLER
234 North Main Street
New City, NY 10956

Civil Engineer:

RENOVATION OF ROCKLAND GREEN ADMINISTRATIVE HEADQUARTERS AND CONSTRUCTION OF AN IMMERSIVE THEATRE EXPERIENCE

TOWN OF CLARKSTOWN
COUNTY OF ROCKLAND

172 MAIN STREET
NANUET, NY 10954

MICHAEL SHILALE ARCHITECTS, L.L.P.
140 Park Avenue New City, NY 10956 Tel 845-708-9200
www.shilale.com

© COPYRIGHT, MICHAEL SHILALE ARCHITECTS, ALL RIGHTS RESERVED.

Drawing Title: SECOND FLOOR REFLECTED CEILING PLAN

Drawing No. A-402

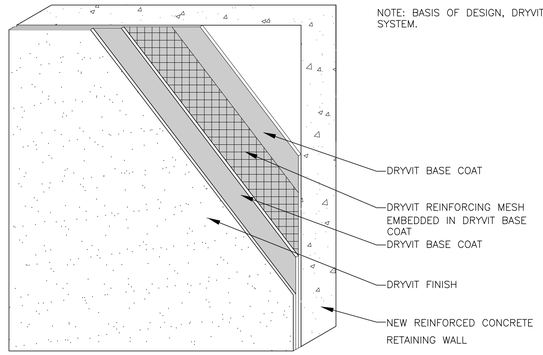

3 RETAINING WALL EFIS SYSTEM
SCALE: 1"=1'-0"

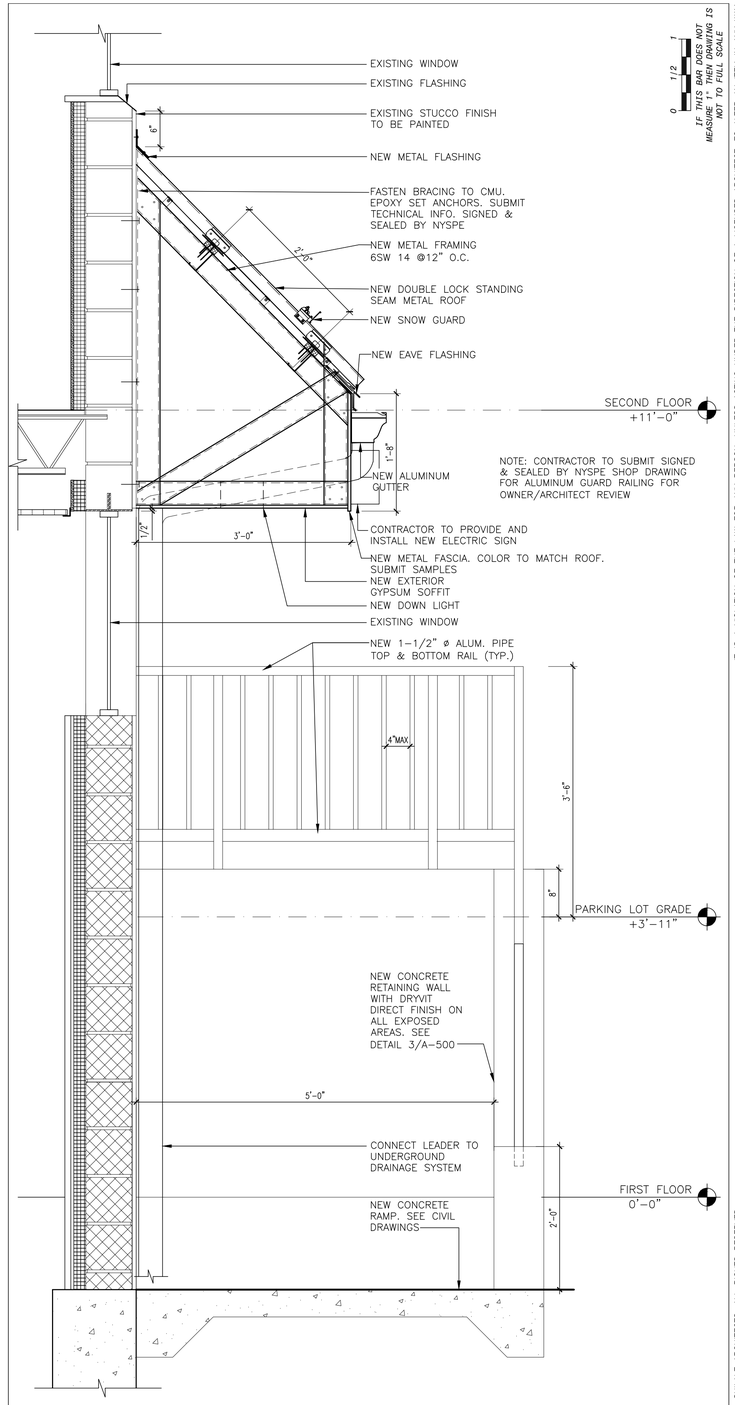

1 SECTION AT SOUTH ENTRANCE
SCALE: 1"=1'-0"

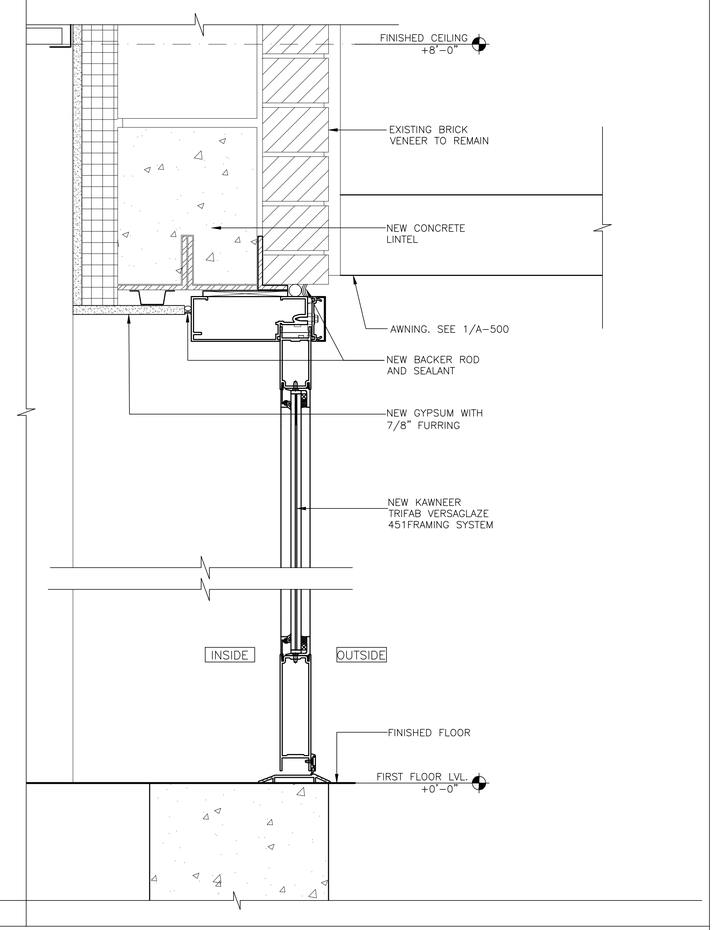

2 SECTION @ NEW STOREFRONT
SCALE: 3"=1'-0"

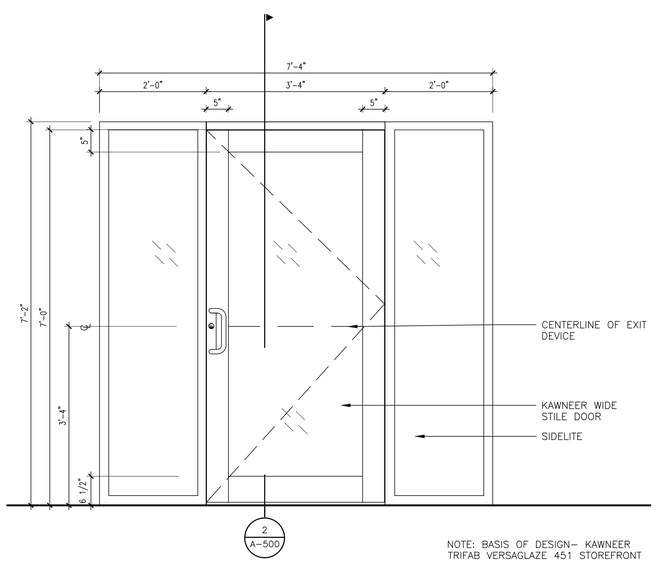

4 NEW STOREFRONT ELEVATION
SCALE: 3/4"=1'-0"

No.	Date	Revisions
0	02-18-25	RFP SET

IT IS A VIOLATION OF THE LAW FOR ANY PERSON, UNLESS ACTING UNDER THE DIRECTION OF A LICENSED ARCHITECT, TO ALTER AN ITEM IN ANY WAY.

Drawn by	MAL/JR
Checked by	MS/JC
Project No.	40034G
Scale	AS NOTED
Date	03-20-23

GREENMAN PEDERSEN, INC
2 EXECUTIVE BOULEVARD
SUITE 202
SUFFERN, NY 10901
Mechanical, Electrical & Structural Engineer:

ATZL, NASHER, & ZIGLER
234 North Main Street
New City, NY 10956
Civil Engineer:

RENOVATION OF ROCKLAND GREEN ADMINISTRATIVE HEADQUARTERS AND CONSTRUCTION OF AN IMMERSIVE THEATRE EXPERIENCE

TOWN OF CLARKSTOWN
COUNTY OF ROCKLAND
172 MAIN STREET
NANUET, NY 10954

MICHAEL SHILALE ARCHITECTS, LLP.
140 Park Avenue New City, NY 10956 Tel 845-708-9200
www.shilale.com

© COPYRIGHT, MICHAEL SHILALE ARCHITECTS, ALL RIGHTS RESERVED.

Drawing Title
EXTERIOR DETAILS

Drawing No.
A-500

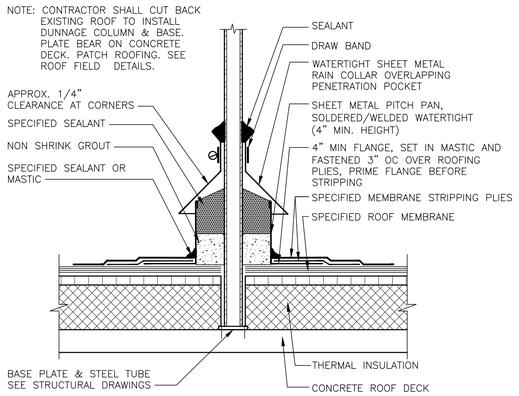

9 PITCH POCKET AT ROOF DUNNAGE
SCALE: 3" = 1'-0"

NOTES:

1. IF THE VERTICAL SPLICE ON THE PARAPET FLASHING IS NOT LOCATED AT THE CORNER, 6" (152mm) WIDE PRESSURE-SENSITIVE ELASTOFORM OR T-JOINT FLASHING, IN CONJUNCTION WITH EPDM PRIMER, MUST BE CENTERED OVER FIELD SPLICE AT ANGLE CHANGE.
2. LAP SEALANT IS REQUIRED ON CUT-EDGES OF REINFORCED MEMBRANE.
3. SEAM FASTENING PLATES/FASTENERS MAY BE INSTALLED INTO THE STRUCTURAL DECK.
4. WHEN SEAM FASTENING PLATES/FASTENERS ARE INSTALLED HORIZONTALLY, HP FASTENERS AND POLYMER SEAM PLATES ARE REQUIRED FOR MECHANICALLY-FASTENED ROOFING SYSTEMS OVER STEEL DECKS.
5. WHEN MECHANICAL FASTENERS ARE USED TO PENETRATE THE METAL COUNTER-FLASHING, USE EPDM WASHERS, APPLY WATER CUT-OFF MASTIC UNDER THE COUNTER-FLASHING OR CAULK THE FASTENER HEADS.
6. MEMBRANE SPLICES SHALL INCORPORATE 6" (152mm) WIDE FIELD APPLIED SecurTAPE FOR PROJECTS WITH 20, 25 and 30-YEAR WARRANTIES.

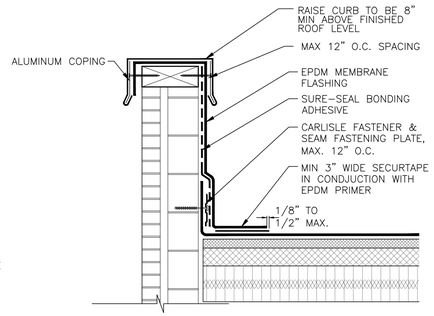

STANDARD FEATURES:
1. 18 GA GALVANIZED STEEL SHELL, BASE PLATE, AND COUNTERFLASHING
2. FACTORY INSTALLED WOOD NAILER
3. INTERNAL BULKHEAD REINFORCEMENT
4. ALL WELDED CONSTRUCTION

5 COPING AT PARAPETS
SCALE: 3" = 1'-0"

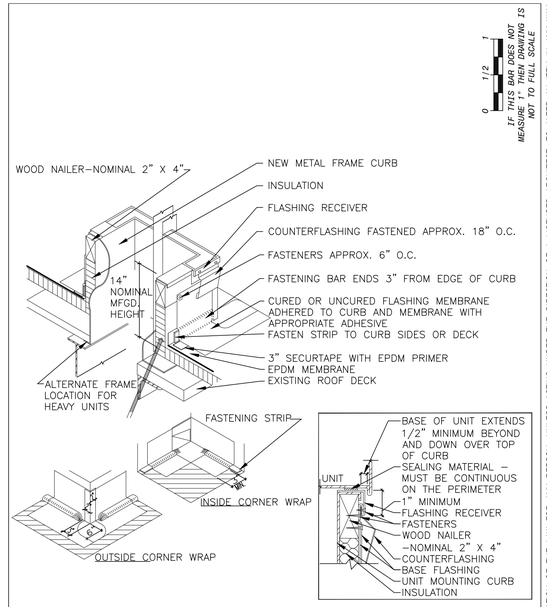

NOTES:

1. IF THE VERTICAL SPLICE ON THE CURB FLASHING IS NOT LOCATED AT THE CORNER, 6" (152mm) WIDE PRESSURE-SENSITIVE ELASTOFORM OR T-JOINT FLASHING, IN CONJUNCTION WITH EPDM PRIMER, MUST BE CENTERED OVER FIELD SPLICE AT ANGLE CHANGE.
2. LAP SEALANT IS REQUIRED ON CUT-EDGES OF REINFORCED MEMBRANE.
3. SEAM FASTENING PLATES/FASTENERS MAY BE INSTALLED INTO THE STRUCTURAL DECK.
4. WHEN SEAM FASTENING PLATES/FASTENERS ARE INSTALLED HORIZONTALLY, HP FASTENERS AND POLYMER SEAM PLATES ARE REQUIRED FOR MECHANICALLY-FASTENED ROOFING SYSTEMS OVER STEEL DECKS.
5. WHEN MECHANICAL FASTENERS ARE USED TO PENETRATE THE METAL COUNTER-FLASHING, USE EPDM WASHERS, APPLY WATER CUT-OFF MASTIC UNDER THE COUNTER-FLASHING OR CAULK THE FASTENER HEADS.
6. MEMBRANE SPLICES SHALL INCORPORATE 6" (152mm) WIDE FIELD APPLIED SecurTAPE FOR PROJECTS WITH 20, 25 and 30-YEAR WARRANTIES.

2 MECHANICAL EQUIPMENT
SCALE: N.T.S.

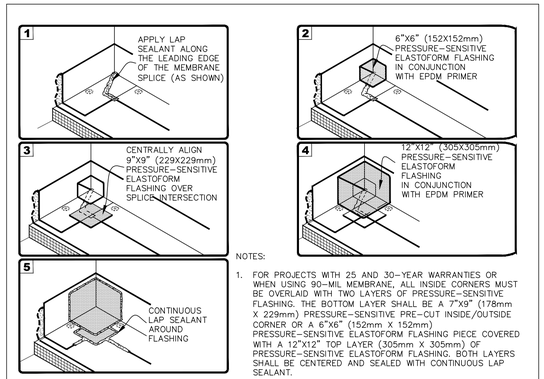

NOTES:

1. FOR PROJECTS WITH 25 AND 30-YEAR WARRANTIES OR WHEN USING 90-MIL MEMBRANE, ALL INSIDE CORNERS MUST BE OVERLAID WITH TWO LAYERS OF PRESSURE-SENSITIVE FLASHING. THE BOTTOM LAYER SHALL BE A 7"X9" (178mm X 229mm) PRESSURE-SENSITIVE PRE-CUT INSIDE/OUTSIDE CORNER OR A 6"X6" (152mm X 152mm) PRESSURE-SENSITIVE ELASTOFORM FLASHING PIECE COVERED WITH A 12"X12" TOP LAYER (305mm X 305mm) OF PRESSURE-SENSITIVE ELASTOFORM FLASHING. BOTH LAYERS SHALL BE CENTERED AND SEALED WITH CONTINUOUS LAP SEALANT.
2. EPDM PRIMER MUST BE APPLIED TO ALL SPLICE AREAS AND FOR EACH LAYER OF PRESSURE-SENSITIVE FLASHING.

6 INSIDE CORNER FLASHING
SCALE: 1"=1'-0"

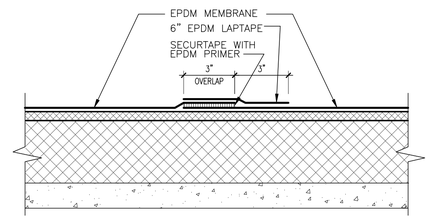

NOTES:

1. TAPE SPLICES MAY BE A MINIMUM 3" (76mm) WIDE FACTORY APPLIED TAPE (FAT). IN ADDITION, OVERLAY THE ENTIRE FIELD SPLICE WITH A CONTINUOUS 6" (152mm) WIDE PRESSURE-SENSITIVE OVERLAYMENT STRIP.
2. APPLY LAP SEALANT AT ALL INTERSECTIONS BETWEEN PRESSURE-SENSITIVE OVERLAYMENT STRIP.

4 EPDM JOINTS
SCALE: 3" = 1'-0"

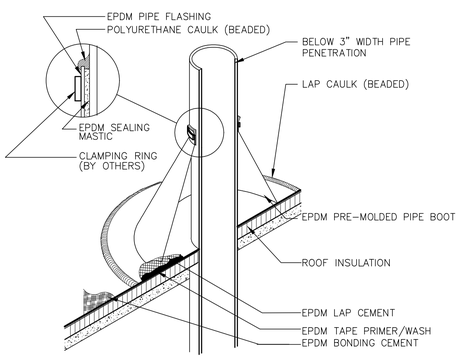

NOTES:
1. REMOVE ALL LEAD AND OTHER FLASHING BEFORE INSTALLING FIELD FABRICATED PIPE SEAL.
2. TEMPERATURE OF PIPE MUST NOT EXCEED 180°F (82°C).
3. APPLY EPDM PRIMER TO SPLICE AREA.
4. PIPE SEAL MUST HAVE INTACT RIB AT TOP EDGE, REGADLESS OF PIPE DIAMETER.
5. DECK FLANGES OF THE PRE-MOLDED PIPE SEAL SHALL NOT BE OVERLAPPED, CUT OR APPLIED OVER ANY ANGLE CHANGE.
6. WHEN A FIELD SPLICE INTERSECTS A PIPE SEAL, APPLY LAP SEALANT ALONG THE EDGE OF THE MEMBRANE SPLICE COVERING THE EXPOSED SPLICE TAPE 2" (51mm) IN EACH DIRECTION FROM THE SPLICE INTERSECTION AND OVERLAY WITH A 6"X6" (152 X 152mm) T-JOINT COVER.

8 PLUMBING VENT
SCALE: 1-1/2"=1'-0"

NOTES:
1. ROOF DRAIN SIZE AND NUMBER OF DRAINS SHALL MATCH EXISTING.
2. ALL BOLTS OR CLAMPS MUST BE IN PLACE TO PROVIDE CONSTANT COMPRESSION ON WATER CUT-OFF MASTIC.
3. THE HOLE IN THE MEMBRANE SHALL EXCEED THE DIAMETER OF THE DRAIN PIPE, BUT SHALL BE NO LESS THAN 1/2" (13mm) FROM THE ATTACHMENT POINTS OF THE DRAIN CLAMPING RING.
4. REMOVE EXISTING LEAD, FLASHING MATERIAL & ENSURE THE DRAIN RING IS COMPLETELY CLEAN DOWN TO BARE METAL.
5. FIELD SPLICES MUST BE LOCATED AT LEAST 6" (152mm) OUTSIDE THE DRAIN SUMP.
6. INSULATION TAPER SHALL NOT BE GREATER THAN 6" (152mm) IN 12" (305mm) HORIZONTAL.

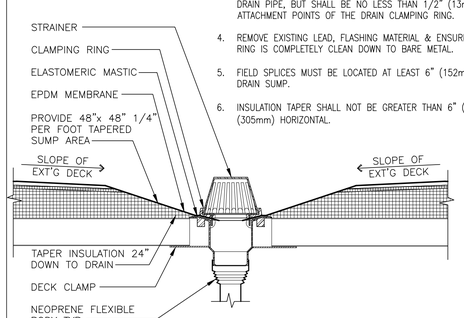

7 ROOF DRAIN
SCALE: 1-1/2"=1'-0"

NOTE: EXISTING EQUIPMENT TO BE LIFTED FOR ROOF REMOVAL/INSTALLATION PLACED ON NEW EQUIPMENT PAD AND PROTECTION MAT AS NOTED

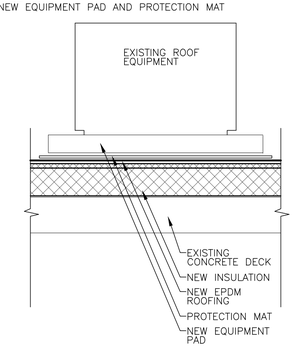

3 EXT'G ROOF EQUIP
SCALE: 1-1/2" = 1'-0"

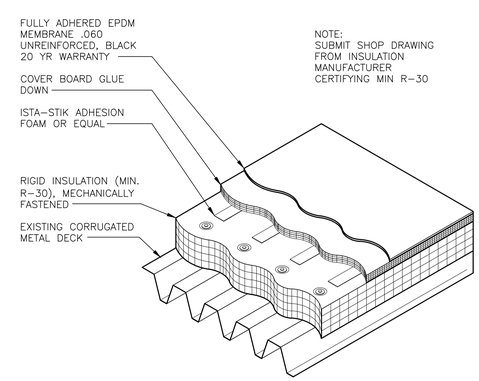

1 TYP. EPDM ON METAL DECK
SCALE: N.T.S.

© COPYRIGHT, MICHAEL SHILALE ARCHITECTS, ALL RIGHTS RESERVED.

Drawing Title
ROOF DETAILS

Drawing No.
A-530

MICHAEL SHILALE ARCHITECTS, L.L.P.
140 Park Avenue New City, NY 10956 Tel 845-708-9200
www.shilale.com

No.	Date	Revisions
0	02-18-25	RFP SET

IF THIS BAR DOES NOT MEASURE 1, THEN DRAWING IS NOT TO FULL SCALE

IT IS A VIOLATION OF THE LAW FOR ANY PERSON, UNLESS ACTING UNDER THE DIRECTION OF A LICENSED ARCHITECT, TO ALTER AN ITEM IN ANY WAY.

Drawn by	SP
Checked by	MS/JC
Project No.	40034G
Scale	AS NOTED
Date	06-07-24

Mechanical, Electrical & Structural Engineer:
GREENMAN PEDERSEN, INC
2 EXECUTIVE BOULEVARD SUITE 202
SUFFERN, NY 10901

Civil Engineer:
ATZL, NASHER, & ZIGLER
234 North Main Street
New City, NY 10956

RENOVATION OF ROCKLAND GREEN ADMINISTRATIVE HEADQUARTERS AND CONSTRUCTION OF AN IMMERSIVE THEATRE EXPERIENCE

TOWN OF CLARKSTOWN
COUNTY OF ROCKLAND

175 MAIN STREET
NANUET, NY 10954

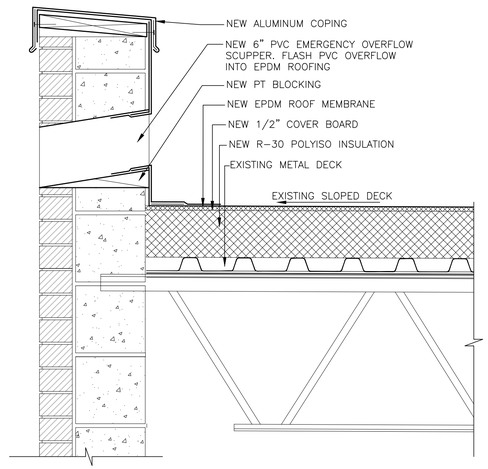

8 PROPOSED THOUGH WALL SCUPPER
SCALE: 1-1/2" = 1'-0"

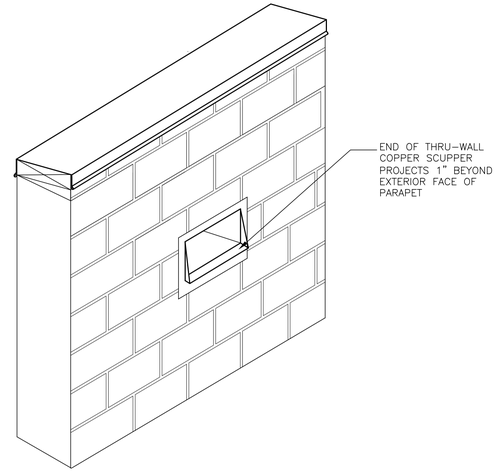

6 SCUPPER AND LEADER HEAD
SCALE: 3/4"=1'-0"

NOTES:
1. ROOFING CONTRACTOR SHALL SUBMIT CUT SHEETS ON TYPE OF BUILT UP ROOFING MATERIAL, PRIOR TO PURCHASE OF MATERIALS.

2. ANY CHANGES THAT MAY EXIST OR OCCUR DURING CONSTRUCTION, THAT DIFFERS FROM DETAILS SHOWN, MUST BE REPORTED TO THE ARCHITECT PRIOR TO PROCEEDING W/ WORK IN AREA.

3. BOTTOM OF EXISTING WALL TO BE RECONSTRUCTED TO THE EXTENT NECESSARY TO RAISE EXISTING WEEP.

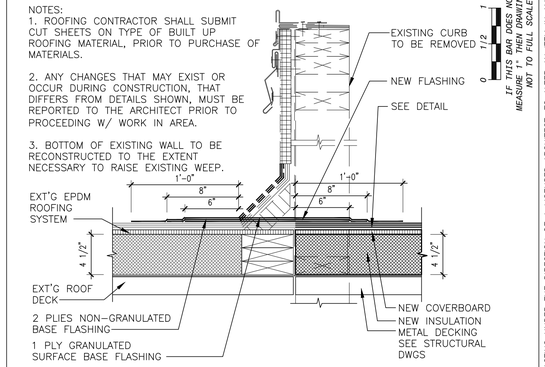

3 ROOF PATCHING AT REMOVED RTU
SCALE: 1 1/2"=1'-0"

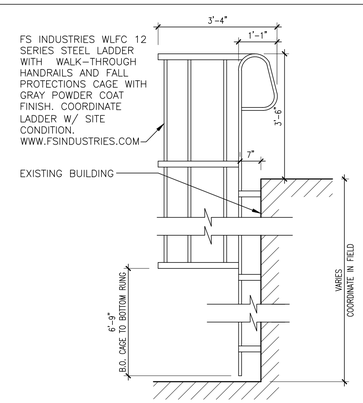

5 STEEL LADDER W/ CAGE
SCALE: 1/2" = 1'-0"

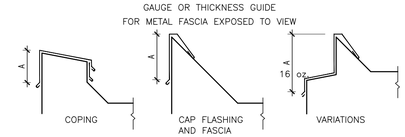

RECOMMENDED MINIMUM GAUGES FOR FASCIA SHOWN ABOVE				
EXPOSED FACE WITHOUT BREAKS "A" DIMENSION	CLEAT REQUIRED	GALVANIZED IRON	COLD ROLLED COPPER	ALUMINUM 3003-H14
UP TO 4" FACE	NO	26 GA.	16 oz.	.032" (20 GA.)
4" TO 6" FACE	YES	26 GA.	16 oz.	.040" (18 GA.)
6" TO 8" FACE	YES	24 GA.		.050" (16 GA.)
8" TO 10" FACE	YES	22 GA.	20 oz.	.064" (14 GA.)
10" TO 15" FACE	YES	20 GA.	ADD BRAKES TO STIFFEN	.080" (12 GA.)

NOTE:

1. WHEN USING THE ABOVE TABLE, OTHER ITEMS SHOULD BE CONSIDERED, SUCH AS FASTENING PATTERN. FOR INSTANCE, IF THE METAL CAN ONLY BE FASTENED AT 100" FOOT INTERVALS, A HEAVIER GAUGE METAL WOULD BE REQUIRED. ALL CLEATS SHALL BE CONTINUOUS AND OF SAME MATERIAL OF EQUAL OR GREATER THICKNESS THAN THE FASCIA METAL USED.

2 FASCIA THICKNESS
SCALE: N.T.S.

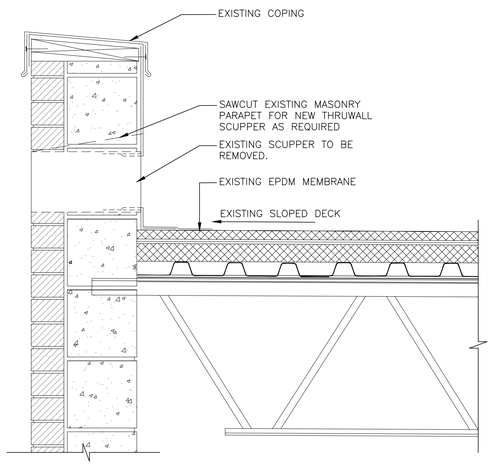

7 EXISTING THROUGH WALL SCUPPER
SCALE: 1-1/2" = 1'-0"

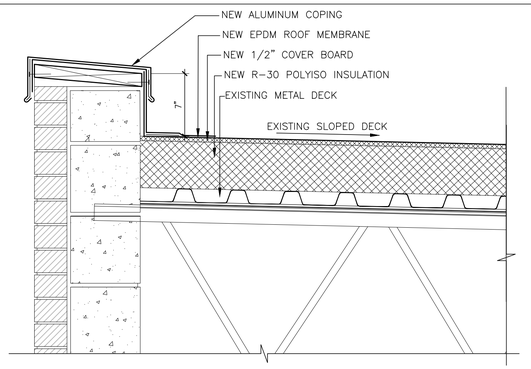

4 SOUTH SIDE PARAPET
SCALE: 1-1/2" = 1'-0"

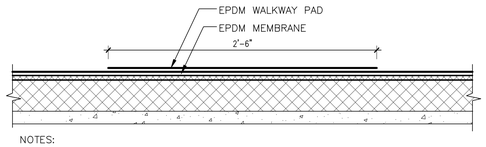

NOTES:

1. WALKWAYS MUST BE INSTALLED AT ALL TRAFFIC CONCENTRATION POINTS (I.E., ROOF HATCHES, ACCESS DOORS, ROOFTOP LADDERS, ETC.) REGARDLESS OF TRAFFIC FREQUENCY WALKWAYS MUST ALSO BE INSTALLED IF REGULAR MAINTENANCE (ONCE A MONTH OR MORE) IS NECESSARY TO SERVICE ROOFTOP EQUIPMENT. SEE A-101 FOR LOCATIONS.
2. THE ENTIRE SURFACE WHERE THE PS MOLDED WALKWAY PAD WILL BE APPLIED MUST BE CLEAN. THE ADHESIVE ON THE BACK OF THE PS MOLDED WALKWAY PAD WILL NOT ADHERE TO DUSTED OR DIRTY SURFACES. ANY RESIDUAL CONTAMINATION WILL BE DETRIMENTAL TO THE BOND STRENGTH OF THE ADHESIVE.
3. REMOVE ALL FOREIGN MATERIAL.
4. APPLY PRIMER AS PER MANUFACTURER SPECIFICATIONS.
5. ALLOW THE PRIMER TO PROPERLY FLASH OFF UNTIL IT DOES NOT TRANSFER TO A DRY FINGER TOUCH. INSTALL THE PS MOLDED WALKWAY PADS AS SOON AS THE PRIMER FLASHES OFF TO MINIMIZE POTENTIAL DUST CONTAMINATION AND PROMOTE ADHESION IN COLDER WEATHER.
6. ALLOW A 1"-WIDE (25 MM) GAP BETWEEN PS WALKWAY PADS, DISCONTINUE WALKWAYS OVER FIELD SPLICES ALLOWING A MINIMUM 1" (25 MM) GAP.

1 EPDM WALKWAY PAD
SCALE: 1-1/2" = 1'-0"

IT IS A VIOLATION OF THE LAW FOR ANY PERSON, UNLESS ACTING UNDER THE DIRECTION OF A LICENSED ARCHITECT, TO ALTER AN ITEM IN ANY WAY.

No.	Date	Revisions
0	02-18-25	RFP SET

Drawn by SP
Checked by MS/JC
Project No. 40034G
Scale AS NOTED
Date 06-07-24

Mechanical, Electrical & Structural Engineer: GREENMAN PEDERSEN, INC
2 EXECUTIVE BOULEVARD
SUITE 202
SUFFERN, NY 10901

Civil Engineer: ATZL, NASHER, & ZIGLER
234 North Main Street
New City, NY 10956

RENOVATION OF ROCKLAND GREEN ADMINISTRATIVE HEADQUARTERS AND CONSTRUCTION OF AN IMMERSIVE THEATRE EXPERIENCE

172 MAIN STREET
NANUET, NY 10954

TOWN OF CLARKSTOWN
COUNTY OF ROCKLAND

MICHAEL SHILALE ARCHITECTS, L.L.P.
140 Park Avenue New City, NY 10956 Tel 845-708-9200
www.jhilale.com

© COPYRIGHT, MICHAEL SHILALE ARCHITECTS, ALL RIGHTS RESERVED.

Drawing Title
ROOF DETAILS

Drawing No.
A-531

CODE	MATERIAL	MANUFACTURER	PRODUCT	CATALOG NO.	FINISH	COLOR	REMARKS
ACT1	2'X2' CEILING TILE	ARMSTRONG	FROST (FL)	556		BY ARCH	W/FINELINE SUSPENSION SYSTEM
ACT2	2'X4' CEILING TILE	ARMSTRONG	FROST (FL)	551		BY ARCH	W/CENTRICITEE SUSPENSION SYSTEM
CT1	CERAMIC FLOOR TILE	DAL-TILE	MOSAICS UNGLAZED	KEYSTONES		BY ARCH	2' X 2' TILE
CT2	CERAMIC WALL TILE	DAL-TILE	GLAZED WALL TILE	CLASSICS		BY ARCH	
CT3	CERAMIC BASE	DAL-TILE				BY ARCH	
CT4	CERAMIC TILE	CROSSVILLE TILE	VERANDA/STONE	6x6		BY ARCH	
CT5	CERAMIC BASE	CROSSVILLE TILE	VERANDA/STONE	BULLNOSE BASE		BY ARCH	
QT1	QUARRY TILE	DAL TILE	QUARRY TILE	6X6		BY ARCH	
PT1	LATEX FINISH	BENJAMIN MOORE	REGAL AQUA PEARL	319	EGGSHELL	BY ARCH	(1) COAT PT4, (2) COATS PT1
PT2	LATEX FINISH	BENJAMIN MOORE	REGAL AQUAGLO	333	SEMI-GLOSS	BY ARCH	(1) COAT PT4, (2) COATS PT2
PT3	LATEX FINISH	BENJAMIN MOORE	REGAL WALL SATIN	215	FLAT	BY ARCH	(1) COAT PT4, (2) COATS PT3
PT4	LATEX PRIMER	BENJAMIN MOORE	LATEX PRIMER	216	FLAT	BY ARCH	
PT5	LATEX FINISH	BENJAMIN MOORE	DTM ACRYLIC	M29	SEMI-GLOSS	BY ARCH	(3) COAT PT6
PT10	LATEX ENAMEL PRIMER	MOORECRAFT	SUPERSPEC	253		BY ARCH	
PT11	LATEX ENAMEL	MOORECRAFT	SUPERSPEC	276	SEMI-GLOSS	BY ARCH	
PT12	ALKYD URETHANE ENAMEL	BENJAMIN MOORE	COROTECH	V201	SEMI-GLOSS	BY ARCH	
VCT1	VINYL TILE	ARMSTRONG	STAN. COLOR CHART			BY ARCH	
VB1	VINYL BASE	ROPPE				BY ARCH	
GB1	GYPSUM BOARD	USG					
GB2	FIRE RATED GYPSUM	USG		TYPE X			
GB3	ABUSE-RESISTANT GYP BD	USG					
MRGB	MOISTURE RESISTANT GYP BD	CERTAINTEED					
WB1	4" WOOD BASE		CLEAR PINE	COLONIAL		BY ARCH	SUBMIT SAMPLES
WC1	2 1/2" WOOD CASING		CLEAR PINE	COLONIAL		BY ARCH	SUBMIT SAMPLES
CBU1	CEMENTITIOUS BACKER UNIT	USG	"DURO-ROCK"				
CPT1	CARPET TILE	PHILADELPHIA COMMERCIAL	STACK	54920		PLEAT#00500	24"x24" TILE
CPT2	CARPET	MOHAWK	METRO II	MC015		BY ARCH	
ST1	WOOD STAIN	BENJAMIN MOORE	MOORE'S PENET STN	241	LOW LUSTER	BY ARCH	SUBMIT SAMP.(1) COAT ST1
ST2	P.T. WOOD STAIN	BENJAMIN MOORE	MOORE WOOD	070	SEMI-TRANS	BY ARCH	(2) COATS ST2
V1	VARNISH	BENJAMIN MOORE	BEN WOOD POLY				SUBMIT SAMP.(2) COATS V-1
CH1	CHEMICAL HARDENER	SONNEBORNE	LAPIDOLITH				
STD	PT DECK STAIN	CABOT		0700 SERIES			
SRT	SOLID RUBBER TILE	JOHNSONITE	ROUNDEL	SOLID	SQUARE RT	BY ARCH	24"x24" TILE
SPR1	K13 SPRAY ON CLG.	CELLULOSE CORP.	SPRAY ON FINISH	K-13		BY ARCH	
VCT2	LUXURIOUS VINYL TILE	HMTX	TEKNOFLOR			BY ARCH	FLOATING FLOOR

FINISH MATERIAL SCHEDULE REMARKS

1. –
2. –

FINISH MATERIAL SCHEDULE

ROOM FINISH SCHEDULE

Level	Room Number	Name	WALL NORTH	WALL EAST	WALL SOUTH	WALL WEST	BASE	FLR	CLG	REMARKS
FIRST FLOOR	2000	ENTRANCE LOBBY	PT4	PT4	PT4	PT4	VB1	VCT2	SPR1	*2
FIRST FLOOR	2001	OFFICE	PT2	PT2	PT2	PT2	VB1	VCT2	ACT1	
FIRST FLOOR	2003	OPEN OFFICE	PT2	PT2	PT2	PT2	VB1	VCT2	ACT1	
FIRST FLOOR	2005	NEW ACCESSIBLE RESTROOM	CT2/PT2	CT2/PT2	CT2/PT2	CT2/PT2	CT3	CT1	MRGB	
FIRST FLOOR	2008	EDUCATIONAL EXHIBIT	PT4	PT4	PT4	PT4	-	VCT2	SPR1	*2
FIRST FLOOR	2009	HC TOILET	PT2	PT2	PT2	PT2	-	-	MRGB	*3
FIRST FLOOR	2010	BREAK ROOM	PT2	PT2	PT2	PT2	VB1	VCT2	ACT1	
FIRST FLOOR	2011	THEATER	PT4	PT4	PT4	PT4	VB1	CPT1	SPR1	*2
FIRST FLOOR	2012	COMP ROOM	PT2	PT2	PT2	PT2	VB1	VCT2	ACT1	
FIRST FLOOR	2013	WOMENS TOILET	PT2	PT2	PT2	PT2	-	-	ACT1	*3
FIRST FLOOR	2014	MENS TOILET	PT2	PT2	PT2	PT2	-	-	ACT1	*3
FIRST FLOOR	2015	MECHANICAL	-	-	-	-	-	-	-	
FIRST FLOOR	2016	STORAGE	PT2	PT2	PT2	PT2	VB1	VCT2	ACT1	
FIRST FLOOR	2017	ELEC/TEL	PT2	PT2	PT2	PT2	VB1	VCT1	ACT1	
FIRST FLOOR	2018	CORRIDOR	PT2	PT2	PT2	PT2	VB1	VCT2	ACT1	
FIRST FLOOR	2019	CORRIDOR	PT2	PT2	PT2	PT2	VB1	VCT2	ACT1	
FIRST FLOOR	2020	STORAGE	-	-	PT2	PT2	VB1	VCT1	ACT1	
FIRST FLOOR	A	STAIRWELL	PT2	PT2	PT2	PT2	VB1	VCT2	-	
FIRST FLOOR	B	STAIRWELL	PT2	PT2	PT2	PT2	VB1	CPT1	ACT1	
SECOND FLOOR	200	RECEPTION	PT2	PT2	PT2	PT2	VB1	CPT1	ACT1	
SECOND FLOOR	201	OPEN OFFICE	PT2	PT2	PT2	PT2	VB1	CPT1	ACT1	
SECOND FLOOR	202	OFFICE	PT2	PT2	PT2	PT2	VB1	CPT1	ACT1	
SECOND FLOOR	203	OFFICE	PT2	PT2	PT2	PT2	VB1	CPT1	ACT1	
SECOND FLOOR	204	OFFICE	PT2	PT2	PT2	PT2	VB1	CPT1	ACT1	
SECOND FLOOR	205	OFFICE	PT2	PT2	PT2	PT2	VB1	CPT1	ACT1	
SECOND FLOOR	206A	RESTROOM	PT2	PT2	PT2	PT2	-	-	ACT1	*3
SECOND FLOOR	206B	RESTROOM	PT2	PT2	PT2	PT2	-	-	ACT1	*3
SECOND FLOOR	206C	STORAGE	PT2	PT2	PT2	PT2	VB1	CPT1	ACT1	
SECOND FLOOR	206D	STORAGE	PT2	PT2	PT2	PT2	VB1	CPT1	ACT1	
SECOND FLOOR	207	OFFICE	PT2	PT2	PT2	PT2	VB1	CPT1	ACT1	
SECOND FLOOR	208	OFFICE	PT2	PT2	PT2	PT2	VB1	CPT1	ACT1	
SECOND FLOOR	209	OFFICE	PT2	PT2	PT2	PT2	VB1	CPT1	ACT1	
SECOND FLOOR	210	OFFICE	PT2	PT2	PT2	PT2	VB1	CPT1	ACT1	
SECOND FLOOR	211A	JANITOR CLOSET	PT2	PT2	PT2	PT2	VB1	VCT1	ACT1	
SECOND FLOOR	212	RESTROOM	PT2	PT2	PT2	PT2	-	-	ACT1	*3
SECOND FLOOR	213	RESTROOM	PT2	PT2	PT2	PT2	-	-	ACT1	*3
SECOND FLOOR	214	CONFERENCE ROOM	PT2	PT2	PT2	PT2	VB1	CPT1	ACT1	
SECOND FLOOR	215	KITCHENETTE	PT2	PT2	PT2	PT2	VB1	CPT1	GB1	
SECOND FLOOR	216	CORRIDOR	PT2	PT2	PT2	PT2	VB1	CPT1	ACT1	
SECOND FLOOR	217	CORRIDOR	PT2	PT2	PT2	PT2	VB1	CPT1	ACT1	
SECOND FLOOR	218	VESTIBULE	PT2	PT2	PT2	PT2	VB1	CT4	ACT1	
SECOND FLOOR	A	STAIRWELL	PT2	PT2	PT2	PT2	VB1	PT11	PT2	
SECOND FLOOR	B	STAIRWELL	PT2	PT2	PT2	PT2	VB1	PT11	ACT1	

FINISH SCHEDULE REMARKS:

*1. UNFINISHED CONCRETE TO BE PAINTED BY EXHIBIT INSTALLER.
*2. PRIME PAINTING TO BE PAINTED BY CONTRACTOR. FINISHED PAINTING AT WALLS TO BE PAINTED BY EXHIBIT INSTALLER.
*3. EXISTING FLOOR & WALL TILING TO REMAIN

FINISH SCHEDULE

0 1/2 1
IF THIS BAR DOES NOT MEASURE 1", THEN DRAWING IS NOT TO FULL SCALE

No.	Date	Revisions
0	02-18-25	RFP SET

IT IS A VIOLATION OF THE LAW FOR ANY PERSON, UNLESS ACTING UNDER THE DIRECTION OF A LICENSED ARCHITECT, TO ALTER AN ITEM IN ANY WAY.

Drawn by MAL/JR
Checked by MS/JC
Project No. 40034G
Scale AS NOTED
Date 03-20-23

Mechanical, Electrical & Structural Engineer: GREENMAN PEDERSEN, INC
2 EXECUTIVE BOULEVARD
SUITE 202
SUFFERN, NY 10901

Civil Engineer: ATZL, NASHER, & ZIGLER
234 North Main Street
New City, NY 10956

RENOVATION OF ROCKLAND GREEN ADMINISTRATIVE HEADQUARTERS AND CONSTRUCTION OF AN IMMERSIVE THEATRE EXPERIENCE

TOWN OF CLARKSTOWN
COUNTY OF ROCKLAND

175 MAIN STREET
NANUET, NY 10954

MICHAEL SHILALE ARCHITECTS, L.L.P.
140 Park Avenue New City, NY 10956 Tel 845-708-9200
www.shilale.com

© COPYRIGHT, MICHAEL SHILALE ARCHITECTS, LLP, ALL RIGHTS RESERVED.

Drawing FINISH SCHEDULE & PARTITIONS

Drawing No. A-600

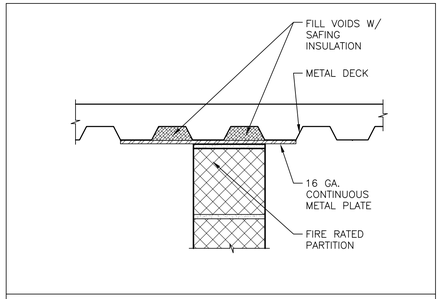

2 FIRE SAFING DTL
SCALE: 1 1/2"=1'-0"

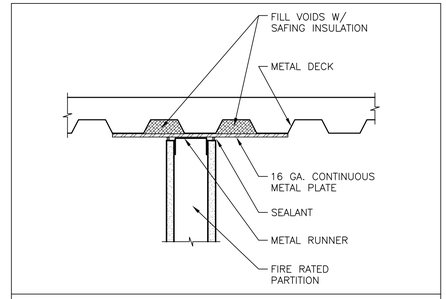

1 FIRE SAFING DTL
SCALE: 1 1/2"=1'-0"

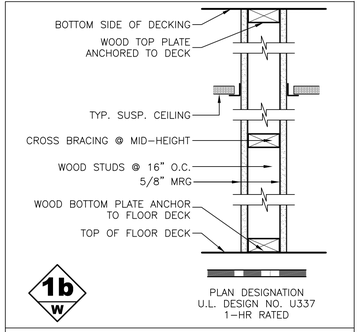

PARTITION 1b

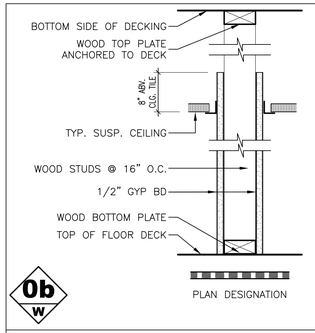

PARTITION 0b

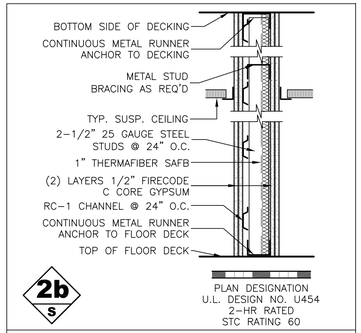

PARTITION 2b

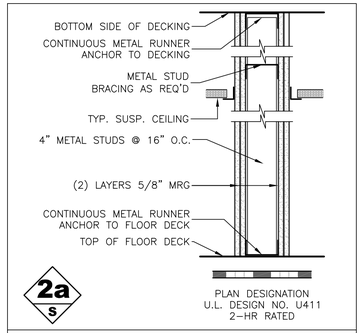

PARTITION 2a

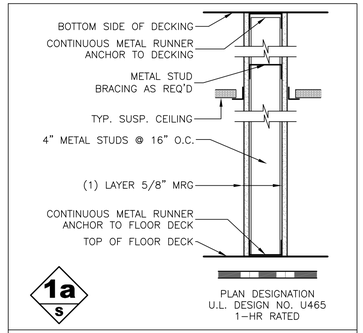

PARTITION 1a

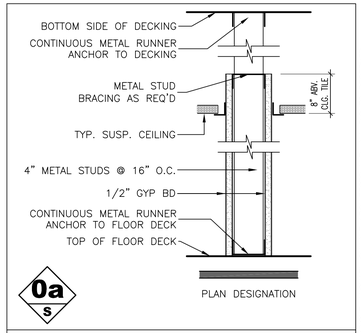

PARTITION 0a

IF THIS BAR DOES NOT MEASURE 1", THEN DRAWING IS NOT TO FULL SCALE
0 1/2 1

IT IS A VIOLATION OF THE LAW FOR ANY PERSON, UNLESS ACTING UNDER THE DIRECTION OF A LICENSED ARCHITECT, TO ALTER AN ITEM IN ANY WAY.

Mechanical, Electrical & Structural Engineer:
GREENMAN PEDERSEN, INC
2 EXECUTIVE BOULEVARD
SUITE 202
SUFFERN, NY 10901

Civil Engineer:
ATZL, NASHER, & ZIGLER
234 North Main Street
New City, NY 10956

Drawn by	MAL/JR
Checked by	MS/JC
Project No.	40034G
Scale	AS NOTED
Date	02-14-25

No.	Date	Revisions
0	02-18-25	RFP SET

RENOVATION OF ROCKLAND GREEN ADMINISTRATIVE HEADQUARTERS AND CONSTRUCTION OF AN IMMERSIVE THEATRE EXPERIENCE

TOWN OF CLARKSTOWN
COUNTY OF ROCKLAND
172 MAIN STREET
NANUET, NY 10954

MICHAEL SHILALE ARCHITECTS, L.L.P.
140 Park Avenue New City, NY 10956 Tel 845-708-9200
www.shilale.com

© COPYRIGHT, MICHAEL SHILALE ARCHITECTS LLP, ALL RIGHTS RESERVED.

Drawing Title
PARTITION TYPE & DETAILS

Drawing No.
A-601

QTY	ITEM	MANUFACTURER	CATALOGUE #	FINISH	KEYNOTE REMARKS
		GROUP – 1(EXTERIOR ENTRY, STAIRWELL)			
1	CONTINUOUS HINGES	MARKAR	FM–300 EDGE MOUNT		
1	WALL STOP	IVES	407	US26D	
1	DOOR CLOSER	LCN CLOSER	4040XP	US26D (689 ALUMINUM)	
1	PANIC DEVICE	VON DUPRIN	QEL–78–NL–OP–AL	BHMA 630–CYLINDER636	
		GROUP–2 (INTERIOR OFFICES)			
1	CONTINUOUS HINGES	MARKAR	FM–300 EDGE MOUNT		
1	GRADE 1 LOCK SET	FALCON K–SERIES	K301 PRIVACY LOCK	US26D	
1	WALL STOP	IVES	407	US26D	
1	DOOR CLOSER	LCN CLOSER	4040XP	US26D (689 ALUMINUM)	
1 PR	FLUSH BOLTS	IVES	FB 358	US26D	
		GROUP–3 (STORAGE, RESTROOM)			
1	CONTINUOUS HINGES	MARKAR	FM–300 EDGE MOUNT		
1	GRADE 1 LOCK SET	FALCON K–SERIES	K561 CLASSROOM LOCK	US26D	
1	WALL STOP	IVES	407	US26D	
1	DOOR CLOSER	LCN CLOSER	4040XP	US26D (689 ALUMINUM)	
		GROUP–4 (CONFERENCE ROOM)			
1	CONTINUOUS HINGES	KAWNEER	–	US32D	
1	LOCK CYLINDER	KAWNEER	THUMBTURN	US32D	
1	WALL STOP	IVES	407	US32D	
1	DOOR CLOSER	LCN CLOSER	4040XP	US32D	
1	PUSH/PULL	KAWNEER	CO–9	US32D	
		GROUP–4A (EXTERIOR STOREFRONT)			
1	CONTINUOUS HINGES	KAWNEER	–	US32D	
1	DOOR CLOSER	LCN CLOSER	4040XP	US32D	
1	PUSH/PULL	KAWNEER	CO–9	US32D	
1	PANIC DEVICE	VON DUPRIN	QEL–78–NL–OP–AL	BHMA 630–CYLINDER636	

NOTE:

HARDWARE SCHEDULE

DOOR SCHEDULE

DOOR NO.	FLOOR	LOCATION / ROOM NAME	PAIR	Room Number	INT. / EXT.	DOOR MATERIAL	DOOR TYPE	DOOR SIZE Nominal WIDTH	DOOR SIZE Nominal HEIGHT	DOOR SIZE Nominal THICKNESS	VISION PANEL / GLAZING TYPES	FRAME ELEVATION	Frame Material	FRAME HEAD Detail	FRAME JAMB Detail	FRAME SILL/SADDLE Detail	REQUIRED FIRE RATING	Hardware Set. (GROUP #)	REMARKS
1	FIRST FLOOR	EDUCATIONAL EXHIBIT		2008	INT.	WD	D1	3' - 0"	7' - 0"	1 3/4"		F-3	HM	H2	J2	-		2	
3	FIRST FLOOR	NEW HC RESTROOM		2005	INT.	WD	D1	3' - 0"	7' - 0"	1 3/4"		F-3	HM	H2	J2	S1		3	
4	FIRST FLOOR	THEATER	*	2011	INT.	ALUM	D3	3' - 0"	7' - 0"	1 3/4"	INSUL./LAM	F-5	HM	H2	J2	S2	1.5 HR	1	NOTE 2, REMOVABLE MULLION
5	FIRST FLOOR	STORAGE		2016	INT.	WD	D1	2' - 6"	7' - 0"	1 3/4"		F-3	HM	H2	J2	-		3	
6	FIRST FLOOR	NORTH ENTRANCE		-	EXT.	FRP	D2	3' - 0"	7' - 0"	1 3/4"	INSUL./LAM	F-3	ALUM	H1	J1	S3		1	
7	FIRST FLOOR	THEATRE		2011	INT.	ALUM	D2	3' - 0"	7' - 0"	1 3/4"	INSUL./LAM	F-3	HM	H2	J2	S2	1.5 HR	1	NOTE 2
9	FIRST FLOOR	SOUTH ENTRANCE		-	EXT.	ALUM	-	3' - 4"	7' - 0"	1 3/4"	INSUL./LAM	F-4	ALUM	H2		S3		4A	NOTE 2, SEE DRAWING 4/A-500
10	FIRST FLOOR	ENTRANCE LOBBY		2000	INT.	WD	D2	4' - 0"	7' - 0"	1 3/4"	INSUL./LAM	F-3	HM	H2	J2	S2	1.5 HR	2	NOTE 2
11	FIRST FLOOR	CORRIDOR		2018	INT.	WD	D2	3' - 0"	7' - 0"	1 3/4"	INSUL./LAM	F-3	HM	H2	J2	-		2	
12	FIRST FLOOR	STAIRWELL		B	INT.	WD	D2	3' - 0"	7' - 0"	1 3/4"	INSUL./LAM	F-3	HM	H2	J2	-		1	
13	FIRST FLOOR	COMPUTER ROOM		2012	INT.	WD	D2	3' - 0"	7' - 0"	1 3/4"	INSUL./LAM	F-3	HM	H2	J2	-	1.5 HR	2	
21	SECOND FLOOR	OFFICE		204	INT.	WD	D1	3' - 0"	7' - 0"	1 3/4"		F-3	HM	H2	J2	-		2	
22	SECOND FLOOR	OFFICE		203	INT.	WD	D1	3' - 0"	7' - 0"	1 3/4"		F-3	HM	H2	J2	-		2	
23	SECOND FLOOR	CONFERENCE ROOM		214	INT.	ALUM	-	3' - 0"	7' - 0"	1 3/4"	INSUL./LAM	F-3	HM	H2	J2	-		4	SEE DRAWING D/A-621
24	SECOND FLOOR	CONFERENCE ROOM		214	INT.	WD	D1	3' - 0"	7' - 0"	1 3/4"		F-3	HM	H2	J2	-		2	

NOTE:
1. CONTRACTOR TO VERIFY IN FIELD ALL EXISTING DOOR AND OPENING SIZES WHERE NEW DOORS AND FRAMES ARE SPECIFIED.
2. INSTALL MAGNETIC HOLD OPEN, INTERCONNECT TO FIRE ALARM SYSTEM.

DOOR SCHEDULE

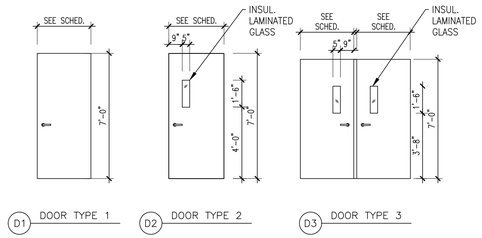

DOOR ELEVATIONS

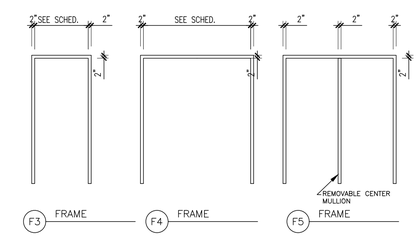

DOOR FRAMES

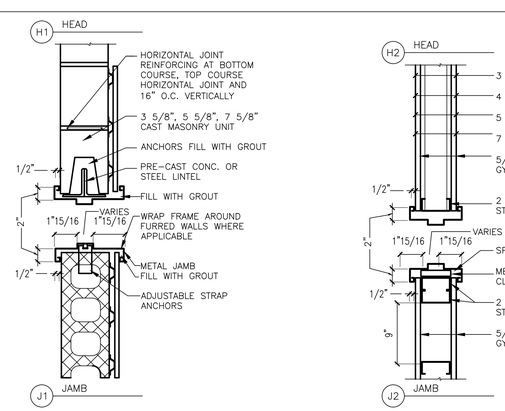

DOOR JAMBS

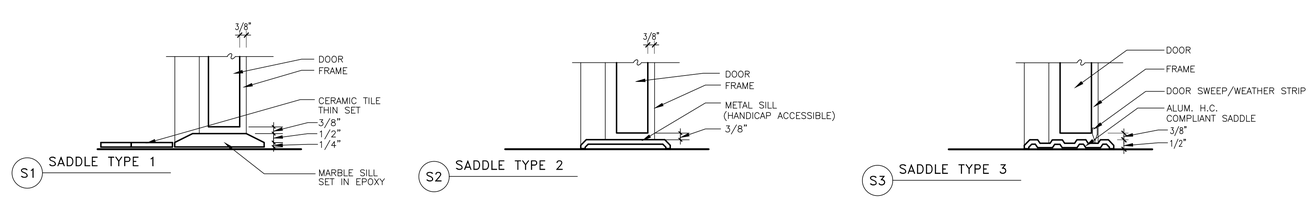

DOOR SADDLE DETAILS

1/2 1 0
IF THIS BAR DOES NOT MEASURE 1, THEN DRAWING IS NOT TO FULL SCALE

IT IS A VIOLATION OF THE LAW FOR ANY PERSON, UNLESS ACTING UNDER THE DIRECTION OF A LICENSED ARCHITECT, TO ALTER AN ITEM IN ANY WAY.

No.	Date	Revisions
0	02–18–25	RFP SET

Drawn by MAL/JR
Checked by MS/JC
Project No. 40034G
Scale AS NOTED
Date 03–20–23

GREENMAN PEDERSEN, INC
2 EXECUTIVE BOULEVARD
SUFFERN, NY 10901

ATZL,NASHER,& ZIGLER
234 North Main Street
New City, NY 10956

Mechanical, Electrical & Structural Engineer:
Civil Engineer:

RENOVATION OF ROCKLAND GREEN ADMINISTRATIVE HEADQUARTERS AND CONSTRUCTION OF AN IMMERSIVE THEATRE EXPERIENCE

TOWN OF CLARKSTOWN
COUNTY OF ROCKLAND

175 MAIN STREET
NEW CITY, NY 10956

MICHAEL SHILALE ARCHITECTS, L.L.P.
140 Park Avenue New City, NY 10956 Tel 845-708-9200
www.shilale.com

© COPYRIGHT, MICHAEL SHILALE ARCHITECTS, ALL RIGHTS RESERVED.

Drawing DOOR & HARDWARE SCHEDULE

Drawing No. A-610

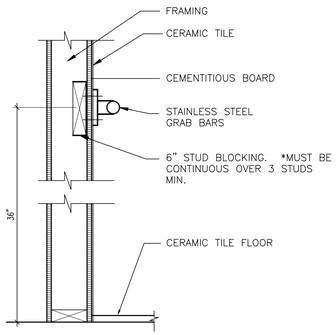

9 GRAB BAR DTL AT WOOD STUD
SCALE: 1"=1'-0"

TCA SYSTEM NO. F125A-05
INSTALLATION SPECIFICATIONS
TILE – ANSI A108.1A, .1B, OR .1C GROUT – ANSI A108.10

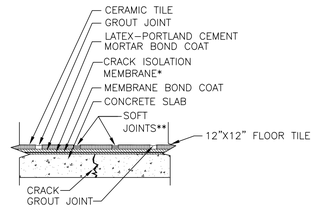

*CONSULT MANUFACTURER FOR MEMBRANE WIDTH

**ONE OR TWO SOFT JOINTS MAY BE REQUIRED (CONSULT MANUFACTURER)

7 CT FLOOR
SCALE: 3/32"=1'-0"

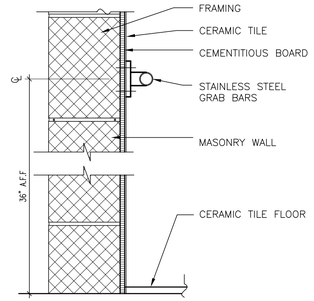

5 GRAB BAR DETAIL AT MASONRY
SCALE: 1"=1'-0"

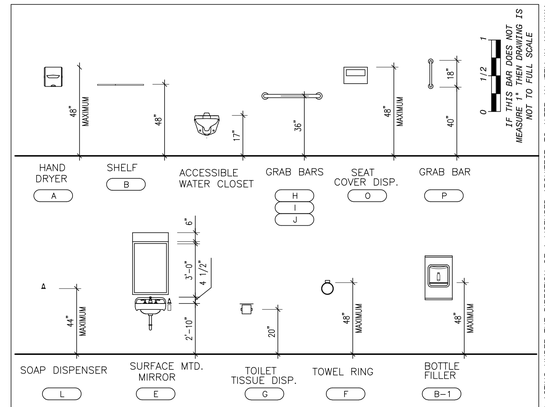

3 ADA TYP. MOUNTING HEIGHTS
SCALE: NTS

TCA SYSTEM NO. W202
INSTALLATION SPECIFICATIONS
MASONRY
DRY-SET MORTAR OR
LATEX-PORTLAND CEMENT MORTAR

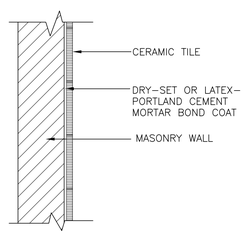

6 CT WALL DETAIL
SCALE: 1 1/2"=1'-0"

ITEM NO.	DESCRIPTION	MANUFACTURER	MODEL NO.	REMARKS
A	HAND DRYER	XLERATOR	XL-SB	
B	12" SHELF	–	–	–
C	24" TOWEL ROD	BASCO	1642	STAINLESS STEEL ROD
E	SURFACE MTD. MIRROR	BOBRICK	B-165	SURFACE MOUNTED 24" x 36"
F	TOWEL RING	BASCO	1650	STAINLESS STEEL
G	TOILET TISSUE DISP.	BOBRICK	B-699	STAINLESS STEEL DISPENSER
H	36" GRAB BAR	BASCO	6417HP	
I	48" GRAB BAR	BASCO	6419HP	
J	42" GRAB BAR	BASCO	6418HP	
K	MEDICINE CABINET	BASCO	378P	STAINLESS FRAMED 18" x 36" x 3" RECESSED
L	SOAP DISPENSER	BOBRICK	B-2111	STAINLESS STEEL SURFACE MOUNTED
M	24" GRAB BAR	BASCO	6414HP	
O	SEAT COVER	BOBRICK	B-221	STAINLESS STEEL
P	18" GRAB BAR	BASCO	6413HP	
U	LIQUID SOAP DISPENSER	BRADLEY	6315	STAINLESS STEEL
B-1	BOTTLE FILLER	MURDOCK	BF16-WF1	STAINLESS STEEL

* PROVIDED BY OWNER. INSTALLED BY CONTRACTOR

NOTE: ALL FIXTURE SENSORS TO BE PROVIDED WITH BATTERY POWER.

2 ACCESSORIES SCHEDULE
SCALE: N.T.S.

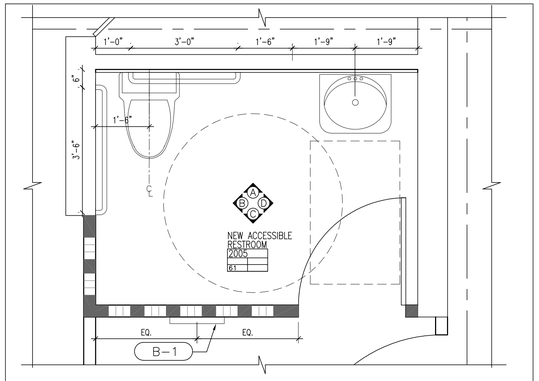

1 BATHROOM PLAN
SCALE: 1/2"=1'-0"

PLAN NORTH

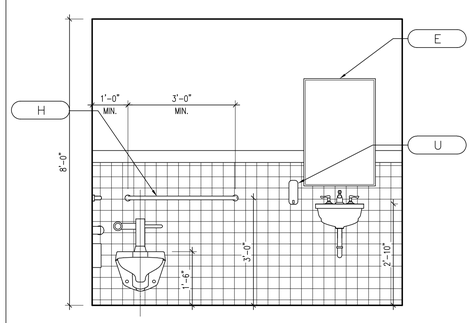

A ELEVATION
SCALE: 1/2"=1'-0"

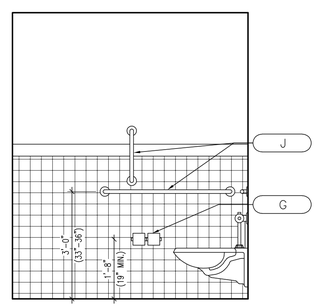

B ELEVATION
SCALE: 1/2"=1'-0"

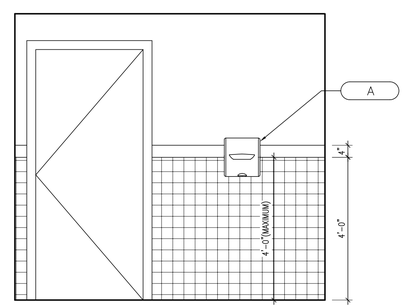

C ELEVATION
SCALE: 1/2"=1'-0"

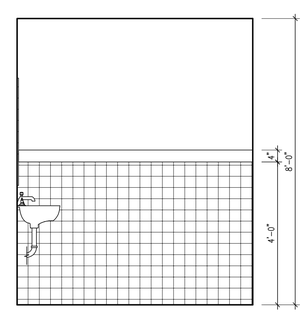

D ELEVATION
SCALE: 1/2"=1'-0"

IT IS A VIOLATION OF THE LAW FOR ANY PERSON, UNLESS ACTING UNDER THE DIRECTION OF A LICENSED ARCHITECT, TO ALTER AN ITEM IN ANY WAY.

No.	Date	Revisions
0	02-18-25	RFP SET

Drawn by MAL/JR
Checked by MS/JC
Project No. 40034G
Scale AS NOTED
Date 03-20-23

GREENMAN PEDERSEN, INC
2 EXECUTIVE BOULEVARD
SUITE 202
SUFFERN, NY 10901

Mechanical, Electrical & Structural Engineer:

ATZL, NASHER, & ZIGLER
224 North Main Street
New City, NY 10956

Civil Engineer:

RENOVATION OF ROCKLAND GREEN ADMINISTRATIVE HEADQUARTERS AND CONSTRUCTION OF AN IMMERSIVE THEATRE EXPERIENCE

172 MAIN STREET
NYACK, NY 10994

TOWN OF CLARKSTOWN
COUNTY OF ROCKLAND

MICHAEL SHILALE ARCHITECTS, L.L.P.
140 Park Avenue New City, NY 10956 Tel 845-708-9200
www.shilale.com

© COPYRIGHT, MICHAEL SHILALE ARCHITECTS, ALL RIGHTS RESERVED.

Drawing Title
BATHROOM ELEVATIONS

Drawing No.
A-620

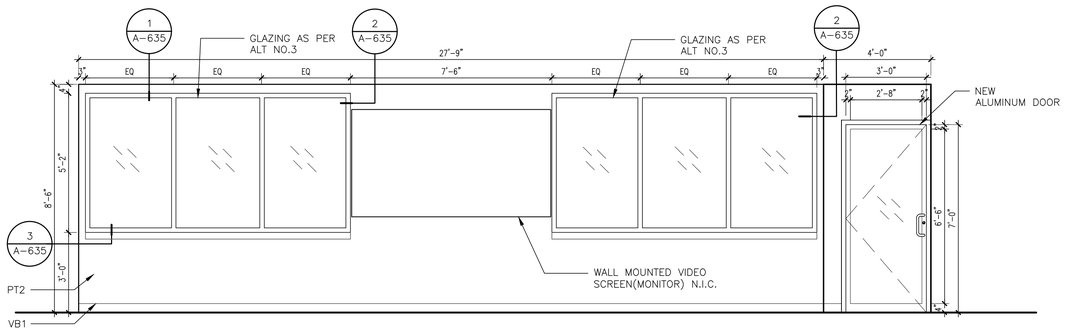

D ELEVATION
SCALE: 3/8"=1'-0"

ALUMINUM DOOR BASIS OF DESIGN:
KAWNEER TRIFAB 450, NARROW STILE

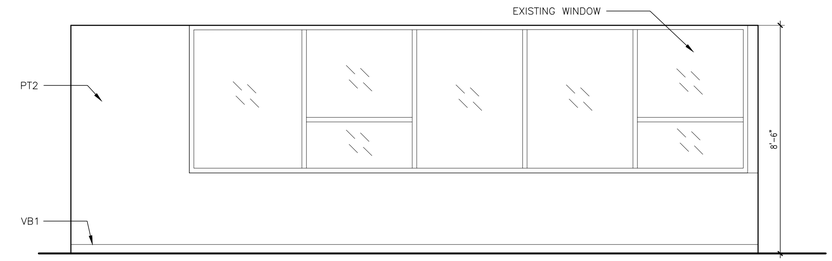

A ELEVATION
SCALE: 3/8"=1'-0"

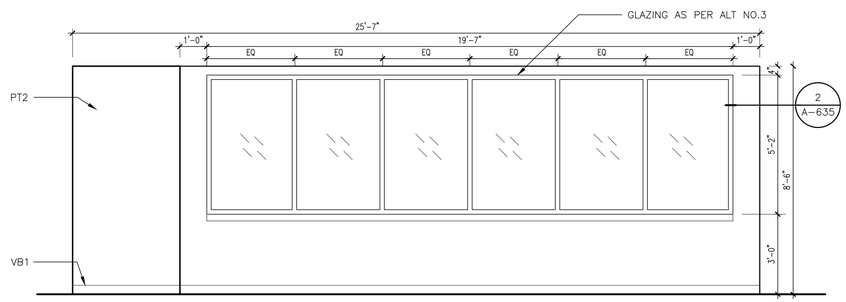

C ELEVATION
SCALE: 3/8"=1'-0"

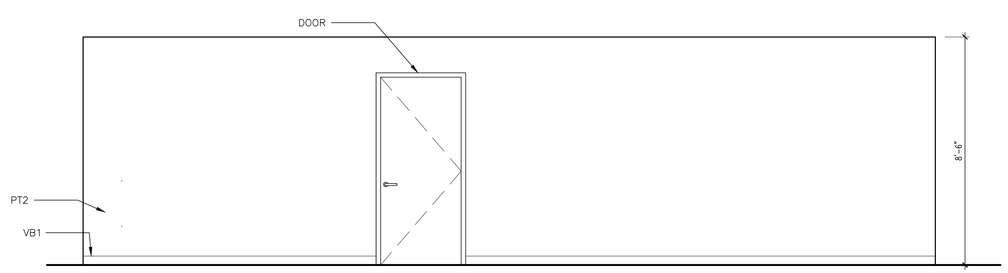

B ELEVATION
SCALE: 3/8"=1'-0"

2 CONFERENCE ROOM ELEVATIONS
SCALE: 3/8"=1'-0"

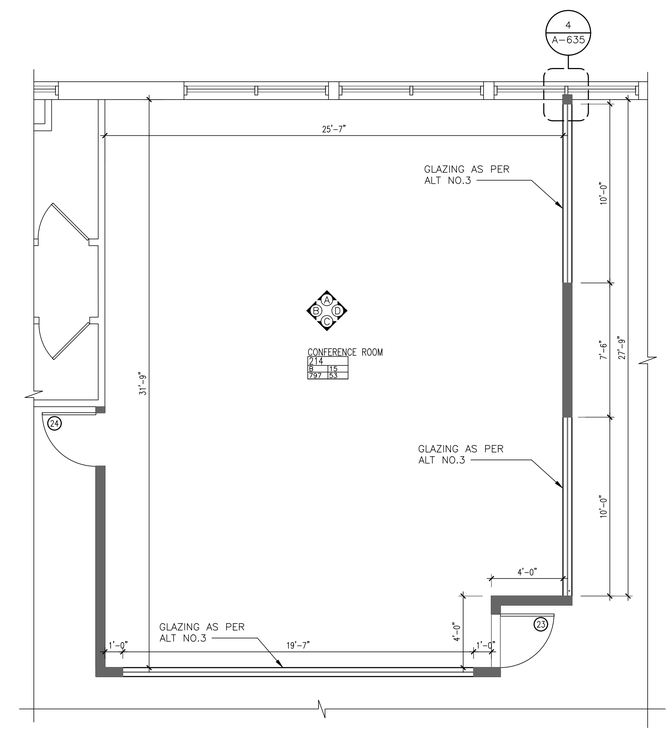

1 CONFERENCE ROOM PLAN
SCALE: 1/4"=1'-0"

PLAN NORTH

0 1/2 1
IF THIS BAR DOES NOT MEASURE 1, THEN DRAWING IS NOT TO FULL SCALE

IT IS A VIOLATION OF THE LAW FOR ANY PERSON, UNLESS ACTING UNDER THE DIRECTION OF A LICENSED ARCHITECT, TO ALTER AN ITEM IN ANY WAY.

No.	Date	Revisions
0	02-18-25	RFP SET

Drawn by MAL/JR
Checked by MS/JC
Project No. 40034G
Scale AS NOTED
Date 03-20-23

GREENMAN PEDERSEN, INC
2 EXECUTIVE BOULEVARD
SUITE 202
SUFFERN, NY 10901

Mechanical, Electrical & Structural Engineer:

ATZL, NASHER, & ZIGLER
234 North Main Street
New City, NY 10956

Civil Engineer:

RENOVATION OF ROCKLAND GREEN ADMINISTRATIVE HEADQUARTERS AND CONSTRUCTION OF AN IMMERSIVE THEATRE EXPERIENCE

TOWN OF CLARKSTOWN
COUNTY OF ROCKLAND

278 MAIN STREET
NANUET, NY 10954

MICHAEL SHILALE ARCHITECTS, L.L.P.
140 Park Avenue New City, NY 10956 Tel 845-708-9200
www.shilale.com

© COPYRIGHT, MICHAEL SHILALE ARCHITECTS, ALL RIGHTS RESERVED.

Drawing Title
CONFERENCE ROOM ELEVATIONS

Drawing No.
A-621

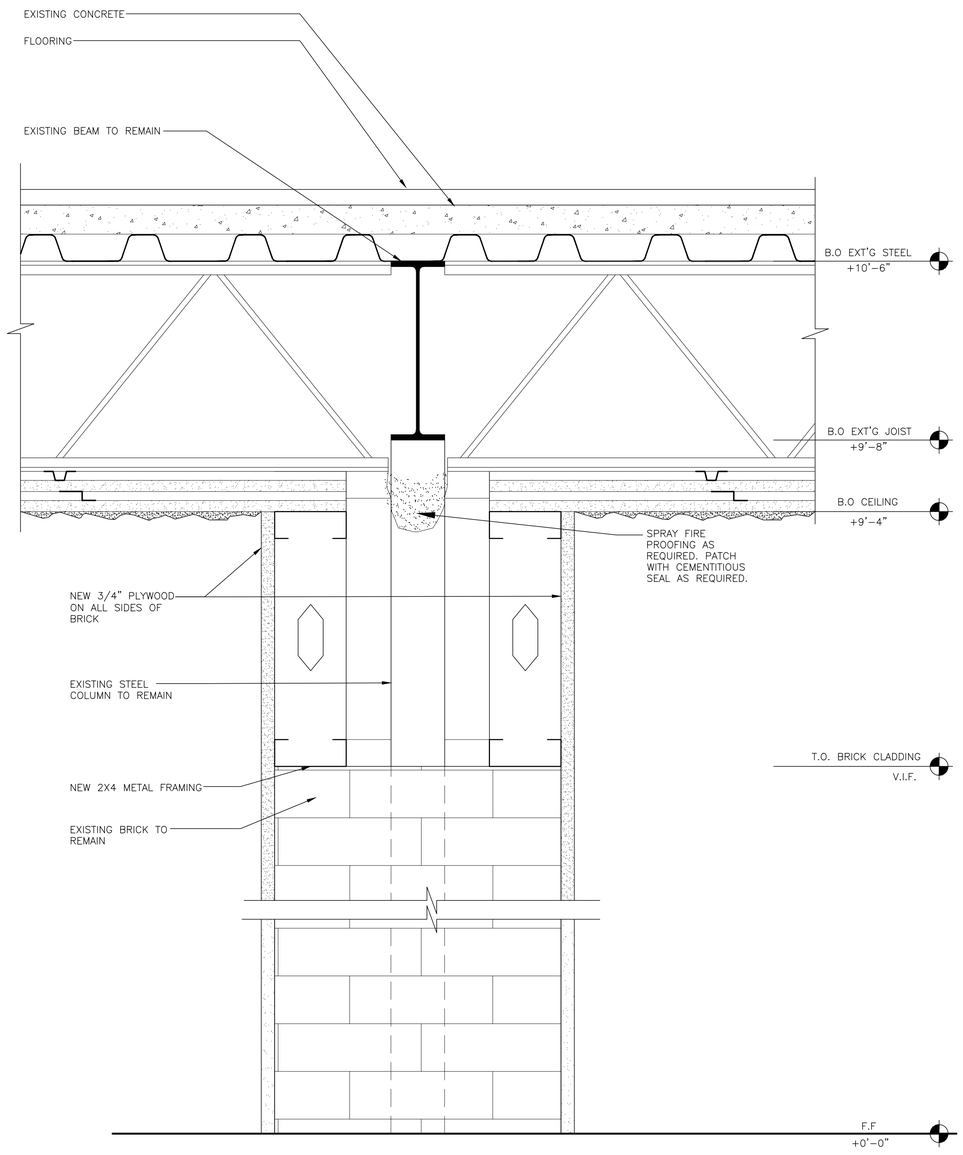

2 STEEL COLUMN ENCLOSURE DETAIL

SCALE: 3"=1'-0"

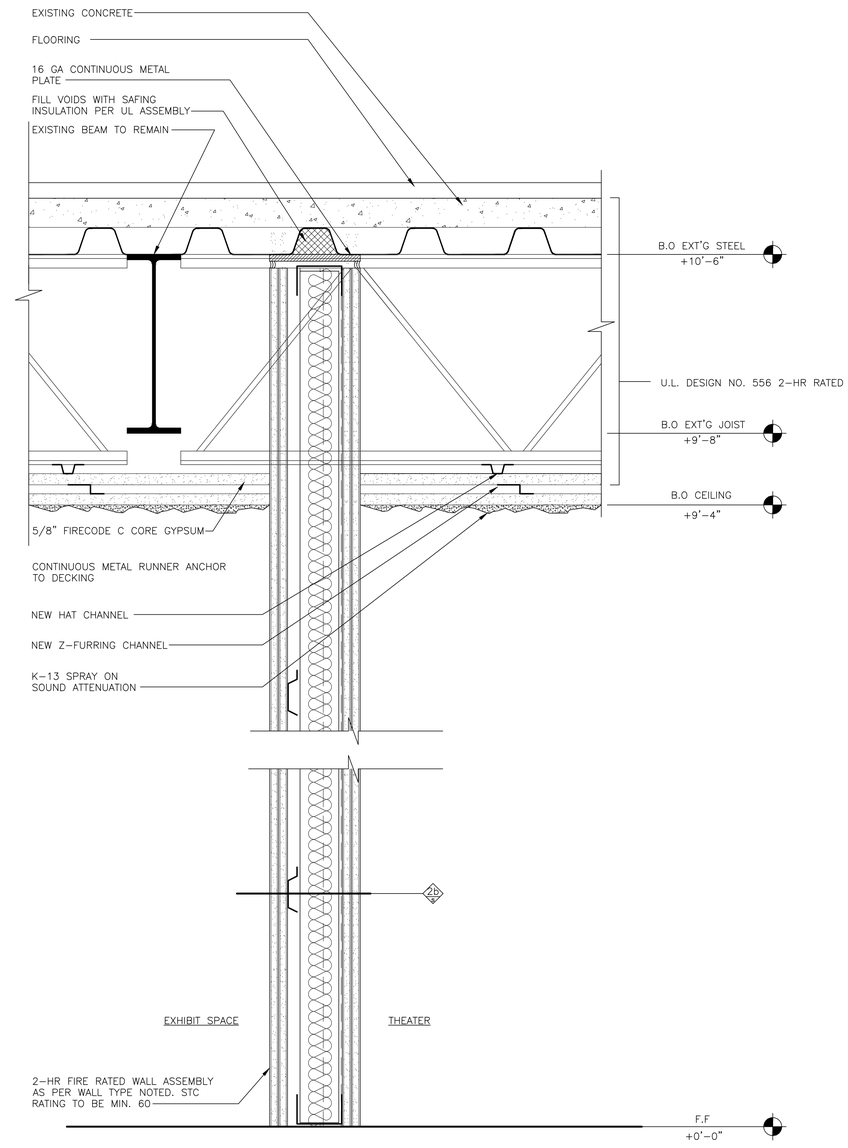

1 WALL SECTION - 2HR FIRE RATED WALL & CEILING

SCALE: 3"=1'-0"

0 1/2 1
IF THIS BAR DOES NOT MEASURE 1, THEN DRAWING IS NOT TO FULL SCALE

No.	Date	Revisions
0	02-18-25	RFP SET

IT IS A VIOLATION OF THE LAW FOR ANY PERSON, UNLESS ACTING UNDER THE DIRECTION OF A LICENSED ARCHITECT, TO ALTER AN ITEM IN ANY WAY.

Drawn by MAL/JR
Checked by MS/JC
Project No. 40034G
Scale AS NOTED
Date 03-20-23

Mechanical, Electrical & Structural Engineer: GREENMAN PEDERSEN, INC
2 EXECUTIVE BOULEVARD
SUITE 202
SUFFERN, NY 10901

Civil Engineer: ATZL, NASHER, & ZIGLER
234 North Main Street
New City, NY 10956

RENOVATION OF ROCKLAND GREEN ADMINISTRATIVE HEADQUARTERS AND CONSTRUCTION OF AN IMMERSIVE THEATRE EXPERIENCE
TOWN OF CLARKSTOWN
COUNTY OF ROCKLAND
172 MAIN STREET
NANUET, NY 10954

MICHAEL SHILALE ARCHITECTS, L.L.P.
140 Park Avenue New City, NY 10956 Tel 845-708-9200
www.shilale.com

© COPYRIGHT, MICHAEL SHILALE ARCHITECTS LLP. ALL RIGHTS RESERVED.

Drawing Title
INTERIOR WALL SECTIONS

Drawing No.
A-630

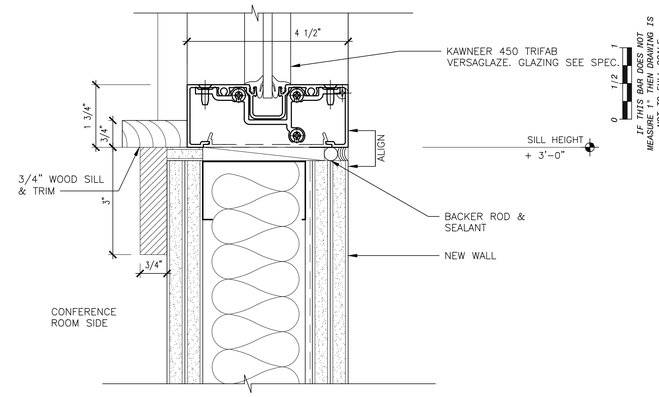

3 SILL DETAIL
SCALE: 6"=1'-0"

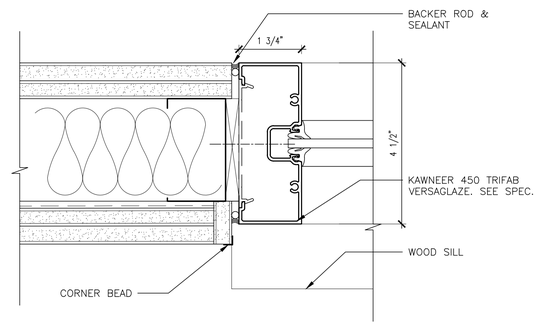

2 JAMB DETAIL
SCALE: 6"=1'-0"

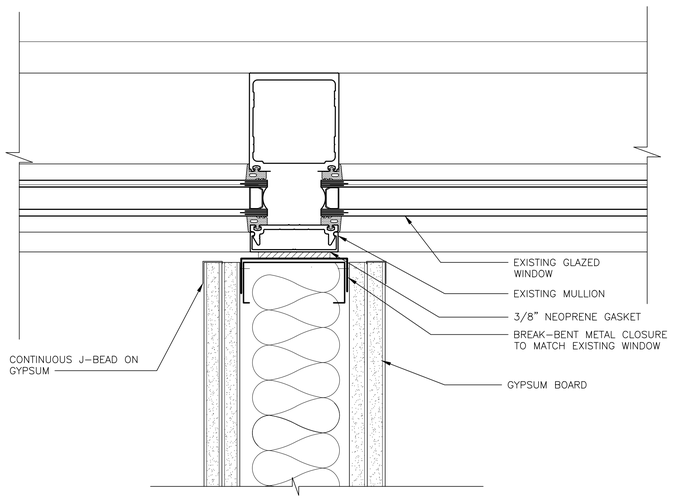

4 GLAZING TO WINDOW DETAIL
SCALE: 6"=1'-0"

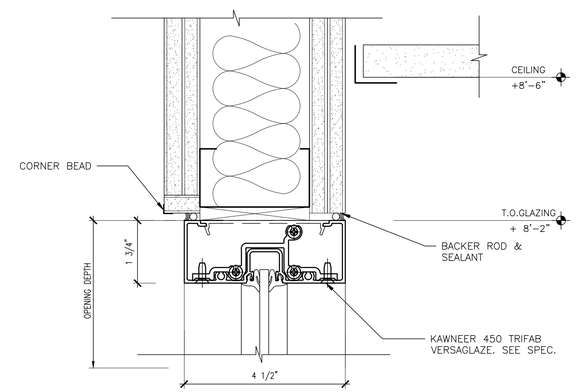

1 HEAD DETAIL
SCALE: 6"=1'-0"

IT IS A VIOLATION OF THE LAW FOR ANY PERSON, UNLESS ACTING UNDER THE DIRECTION OF A LICENSED ARCHITECT, TO ALTER AN ITEM IN ANY WAY.

No.	Date	Revisions
0	02-18-25	RFP SET

Drawn by	MAL/JR
Checked by	MS/JC
Project No.	40034G
Scale	AS NOTED
Date	12-20-24

Mechanical, Electrical & Structural Engineer:
GREENMAN PEDERSEN, INC
2 EXECUTIVE BOULEVARD
SUITE 202
SUFFERN, NY 10901

Civil Engineer:
ATZL, NASHER, & ZIGLER
234 North Main Street
New City, NY 10956

RENOVATION OF ROCKLAND GREEN ADMINISTRATIVE HEADQUARTERS AND CONSTRUCTION OF AN IMMERSIVE THEATRE EXPERIENCE

172 MAIN STREET
NANUET, NY 10954
TOWN OF CLARKSTOWN
COUNTY OF ROCKLAND

MICHAEL SHILALE ARCHITECTS, L.L.P.
149 Park Avenue New City, NY 10956 Tel 845-708-9200
www.shilale.com

© COPYRIGHT, MICHAEL SHILALE ARCHITECTS LLP, ALL RIGHTS RESERVED.

Drawing Title
INTERIOR DETAILS

Drawing No.
A-635

EXISTING PARTITION

EXISTING PARTITION TO BE REMOVED

NEW PARTITION (SEE PARTITION LEGEND A-601)

NEW DOOR

EXISTING DOOR

EXISTING DOOR TO BE REMOVED

LEGEND

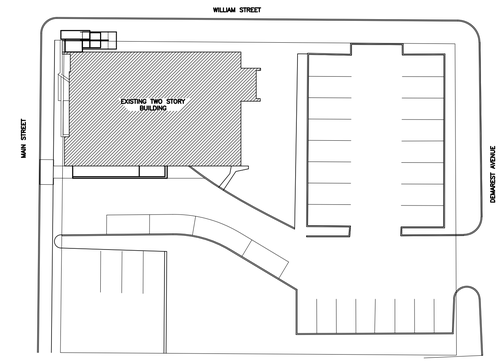

0 1/2 1
IF THIS BAR DOES NOT MEASURE 1, THEN DRAWING IS NOT TO FULL SCALE

PLAN NORTH

KEY PLAN

KEY NOTES

GENERAL NOTES

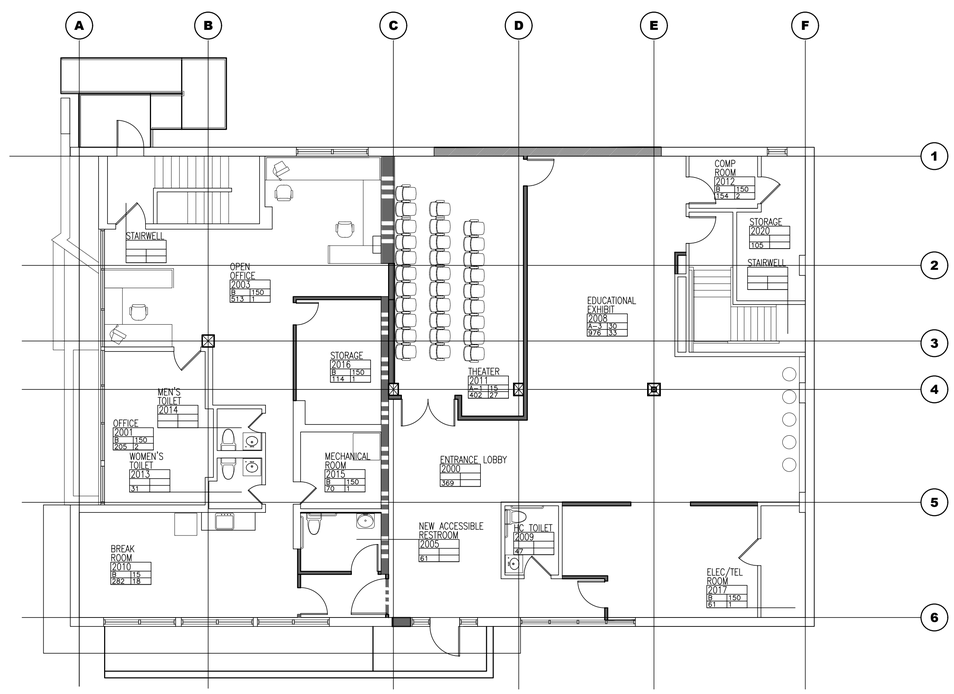

PLAN NORTH

1 FIRST FLOOR FURNITURE PLAN

SCALE: 1/8"=1'-0"

IT IS A VIOLATION OF THE LAW FOR ANY PERSON, UNLESS ACTING UNDER THE DIRECTION OF A LICENSED ARCHITECT, TO ALTER AN ITEM IN ANY WAY.

No.	Date	Revisions
0	02-18-25	RFP SET

Drawn by MAL/JR
Checked by MS/JC
Project No. 40034G
Scale AS NOTED
Date 03-20-23

GREENMAN PEDERSEN, INC
2 EXECUTIVE BOULEVARD
SUITE 202
SUFFERN, NY 10901
Mechanical, Electrical & Structural Engineer:

ATZL, NASHER, & ZIGLER
234 North Main Street
New City, NY 10956
Civil Engineer:

RENOVATION OF ROCKLAND GREEN ADMINISTRATIVE HEADQUARTERS AND CONSTRUCTION OF AN IMMERSIVE THEATRE EXPERIENCE

TOWN OF CLARKSTOWN
COUNTY OF ROCKLAND

175 MAIN STREET
NANUET, NY 10954

MICHAEL SHILALE ARCHITECTS, L.L.P.
140 Park Avenue New City, NY 10956 Tel 845-708-9200
www.shilale.com

© COPYRIGHT, MICHAEL SHILALE ARCHITECTS, ALL RIGHTS RESERVED.

Drawing Title
FIRST FLOOR FURNITURE PLAN

Drawing No.
FF-101

EXISTING PARTITION

EXISTING PARTITION TO BE REMOVED

NEW PARTITION (SEE PARTITION LEGEND A-601)

NEW DOOR

EXISTING DOOR

EXISTING DOOR TO BE REMOVED

LEGEND

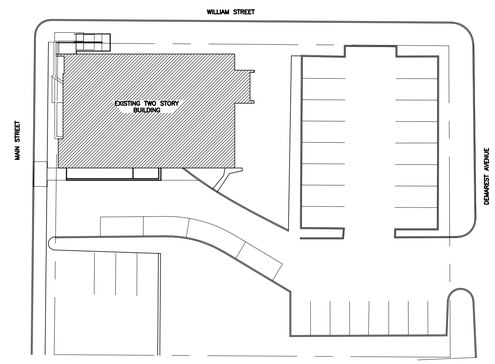

0 1/2 1
IF THIS BAR DOES NOT MEASURE 1, THEN DRAWING IS NOT TO FULL SCALE

PLAN NORTH

KEY PLAN

KEY NOTES

GENERAL NOTES

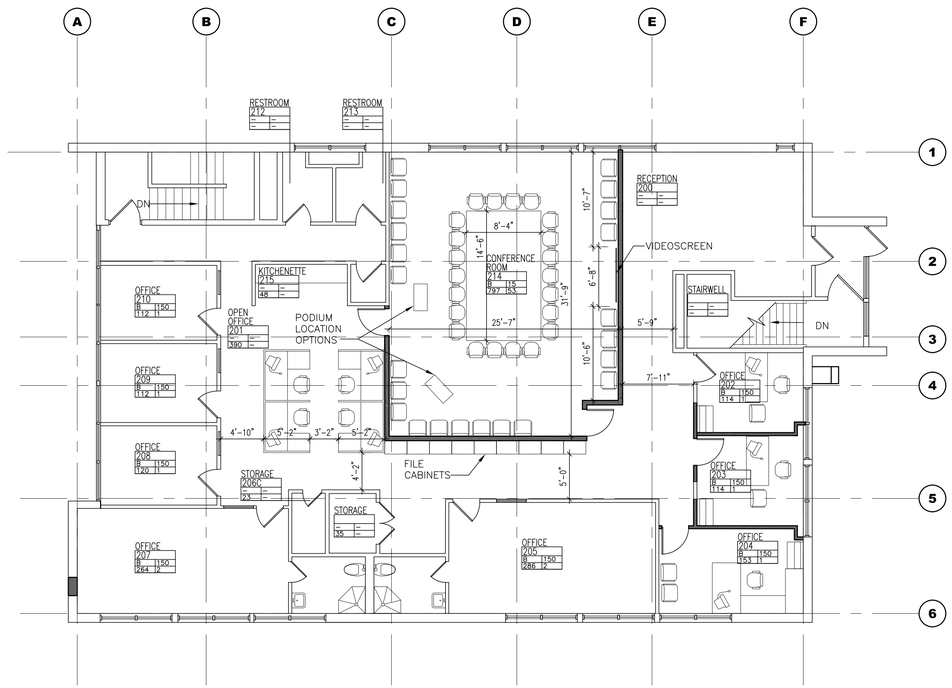

PLAN NORTH

1 SECOND FLOOR FURNITURE PLAN

SCALE: 1/8"=1'-0"

IT IS A VIOLATION OF THE LAW FOR ANY PERSON, UNLESS ACTING UNDER THE DIRECTION OF A LICENSED ARCHITECT, TO ALTER AN ITEM IN ANY WAY.

No.	Date	Revisions
0	02-18-25	RFP SET

Drawn by MAL/JR
Checked by MS/JC
Project No. 40034G
Scale AS NOTED
Date 03-20-23

Mechanical, Electrical & Structural Engineer: GREENMAN PEDERSEN, INC
2 EXECUTIVE BOULEVARD
SUITE 202
SUFFERN, NY 10901

Civil Engineer: ATZL, NASHER, & ZIGLER
234 North Main Street
New City, NY 10956

RENOVATION OF ROCKLAND GREEN ADMINISTRATIVE HEADQUARTERS AND CONSTRUCTION OF AN IMMERSIVE THEATRE EXPERIENCE

172 MAIN STREET
NANUET, NY 10954

TOWN OF CLARKSTOWN
COUNTY OF ROCKLAND

MICHAEL SHILALE ARCHITECTS, L.L.P.
140 Park Avenue New City, NY 10956 Tel 845-708-9200
www.shilale.com

© COPYRIGHT, MICHAEL SHILALE ARCHITECTS, ALL RIGHTS RESERVED.

Drawing Title
SECOND FLOOR FURNITURE PLAN

Drawing No.
FF-102

SAFETY NOTES:

1. SPECIAL PRECAUTIONS SHALL BE TAKEN BY THE CONTRACTOR SO THAT EQUIPMENT ON THE APPLICATION AND ITS INSTALLATION WILL NOT AFFECT THE FOLLOWING:
   - EGRESS TO AND FROM THE BUILDING FIRE SAFETY OR CREATE A FIRE HAZARD
   - STRUCTURAL SAFETY OF THE BUILDING.
   - ACCUMULATION OF DUST AND DEBRIS. THE CONTRACTOR SHALL LEAVE THE SITE BROOM CLEAN EACH DAY.
2. ASBESTOS MUST FIRST BE INVESTIGATED AND VERIFIED IN FIELD BEFORE ANY DEMOLITION OR CONSTRUCTION WORK TO BE PERFORMED. ASBESTOS FREE MUST BE CERTIFIED FOR ALL HVAC EQUIPMENT, DUCTWORK, AND ALL PIPING INSULATION.
3. CONSTRUCTION WORK SHALL BE CONFINED TO WORK AREAS NOTED ON THE DRAWINGS AND SHALL INVOLVE TEMPORARY INTERRUPTION OF HEATING, WATER AND ELECTRIC SERVICES TO THE BUILDING.
4. FIRE SAFETY: ALL BUILDING MATERIALS STORED IN CONSTRUCTION AREA, AND/OR IN ANY AREA OF THE BUILDING ARE TO BE SECURED IN A LOCKED AREA. ACCESS TO SUCH AREAS TO BE CONTROLLED BY THE FACILITY AND/OR GENERAL CONTRACTOR.
5. CONTRACTOR SHALL PROVIDE BARRICADES AROUND WORK AREAS AS REQUIRED TO PREVENT UNAUTHORIZED PERSONS FROM ENTERING THEREIN.
6. THE CONTRACTOR SHALL SUBMIT SAFETY PLAN FOR CONSTRUCTION MANAGER'S APPROVAL.
7. CONFINED SPACES: ALL WORK WITHIN CONFINED SPACES SHALL BE CONDUCTED IN ACCORDANCE WITH OSHA REGULATIONS.

MECHANICAL DEMOLITION NOTES:

1. DEMOLITON/RELOCATIONS: CONTRACTOR SHALL BE RESPONSIBLE FOR DEMOLITION AND RELOCATION'S OF SERVICES, EQUIPMENT AND MATERIAL RELATING TO HIS/HER RESPECTIVE TRADE. INCLUDE IN BID THE COST TO PROVIDE DEMOLITION OF ALL ELECTRICAL EQUIPMENT AND SYSTEMS ASSOCIATED WITH THE RENOVATION WORK. ALL DEMOLITION WORK SHALL COORDINATE WITH OWNER.
2. WHERE EXISTING WALLS, FLOORS OR CEILINGS ARE REMOVED OR PENETRATED, AND WHERE EXISTING END WALLS OF THE BUILDING ARE POINTS OF CONNECTION OF ADDITIONS, ALL SERVICES, PIPING, CONDUIT, CONTROL AND/OR SWITCH DEVICES, LIGHTS, OR OTHER HVAC, PLUMBING, FIRE PROTECTION OR ELECTRICAL EQUIPMENT SHALL BE REMOVED (AND/OR RELOCATED WHERE THEY MUST REMAIN IN SERVICE, OR SERVE, AREAS BEYOND THE IMMEDIATE WORK) CONTRACTOR SHALL FIELD VERIFY CONDITIONS AT THE SITE.
3. PRIOR TO DEMOLITION CONTRACTOR SHALL REVIEW WITH OWNER ALL MATERIALS TO BE REMOVED, SHOULD THE OWNER OPT TO KEEP ANY MATERIALS THE CONTRACTOR SHALL REMOVE AND DELIVER THE PARTS TO THE OWNER ON THE SITE WHERE SO DIRECTED. OTHERWISE ALL DEMOLISHED OR REMOVED MATERIALS SHALL BECOME THE PROPERTY OF THE CONTRACTOR AND SHALL BE REMOVED FROM THE SITE AND BE DISPOSED OF IN A LEGAL MANNER.
4. DEMOLITION SHALL INCLUDE REMOVAL OF ALL PARTS AND PIECES IN THEIR ENTIRETY BACK TO POINTS INDICATED OR IF NOT INDICATED BACK TO THEIR POINT OF SOURCE. REMOVE CONDUCTORS FROM REMAINED CONDUITS WHERE IT IS INDICATED. WHERE CONDUCTORS REMAINED IN CONDUITS-DISCONNECT, ISOLATE AND CAPPED THEM TO ENSURE SAFETY AND PROTECTION. WHERE CONDITIONS PROHIBIT TOTAL REMOVAL OF THE WORK, THE REMAINING PORTION SHALL BE CUT FLUSH WITH THE SURROUNDING SURFACE AND BE CAPPED, PLUGGED OR SEALED AND THE SURROUNDING SURFACE SHALL BE REFINISHED IN AN APPROVED MANNER.
5. MAINTAIN EXISTING UTILITIES INDICATED OR REQUIRED TO REMAIN, KEEP IN SERVICE, AND PROTECT AGAINST DAMAGE DURING DEMOLITION OPERATIONS. DO NOT INTERRUPT EXISTING UTILITIES SERVING OCCUPIED OR USED FACILITIES, EXCEPT WHEN SCHEDULED WITH THE OWNER.
6. DO NOT REMOVE EXISTING STRUCTURAL WORK. DO NOT REMOVE OPERATIONAL ELEMENTS AND SAFETY-RELATED COMPONENTS IN A MANNER RESULTING IN A REDUCTION OF CAPACITIES TO PERFORM IN THE MANNER INTENDED OR RESULTING IN DECREASED OPERATIONAL LIFE, INCREASED MAINTENANCE, OR DECREASED SAFETY.
7. REMOVALS, DISCONNECTIONS, AND RELOCATIONS SHALL BE PERFORMED BY WORKMEN SKILLED IN THE TRADE INVOLVED AND SHALL BE EMPLOYED BY A CONTRACTOR LICENSED IN THE TRADE INVOLVED. ALL WORK SHALL BE DONE IN ACCORDANCE WITH ACCEPTED TRADE PRACTICES.
8. PROVIDE ADEQUATE TEMPORARY SUPPORT FOR WORK TO REMAIN, TO PREVENT FAILURE. DO NOT ENDANGER OTHER WORK.
9. PROTECTION: PROVIDE ADEQUATE PROTECTION WHERE REQUIRED FOR THE PRESENT BUILDING AND ITS CONTENTS. TEMPORARY DUSTPROOF BARRIERS AND BARRICADES SHALL BE ERECTED WHERE REQUIRED FOR PROTECTION OF PERSONNEL, PROTECTION FROM DUST AND DIRT, FOR SECURITY, FIRE AND WEATHER PROTECTIVE REASONS. CONTRACTOR SHALL TAKE EVERY PRECAUTION AGAINST FIRE BY EMPLOYING FIRE DEPARTMENT TYPE HOSES AND PORTABLE FIRE EXTINGUISHERS AS REQUIRED BY OSHA AND/OR THE OWNER'S INSURANCE UNDERWRITER.
10. USE TEMPORARY ENCLOSURES, OR OTHER SUITABLE METHODS TO LIMIT DUST AND DIRT RISING AND SCATTERING TO LOWEST PRACTICAL LEVEL. COMPLY WITH GOVERNING REGULATIONS PERTAINING TO ENVIRONMENTAL PROTECTION.
11. ALL EXISTING EQUIPMENT REQUIRED TO BE REUSED SHALL BE CLEANED, RECONDITIONED, CALIBRATED AND ADJUSTED. IN ALL INSTANCES WHERE CONTRACTOR FINDS THAT EXISTING EQUIPMENT IS DEFECTIVE TO THE POINT WHERE IT CANNOT BE PROPERLY RESTORED AND WILL NOT OPERATE PROPERLY, THE CONTRACTOR SHALL REPORT THE SPECIFIC INSTRUMENTS OR EQUIPMENT TO THE OWNER/ENGINEER FOR DIRECTIONS.
12. TEMPORARY SHUTDOWNS OF SERVICE OF EXISTING ELECTRICAL, HEATING, AIR CONDITIONING, AND VENTILATION SYSTEMS SHALL BE PERFORMED WITH A MINIMUM OF DISRUPTION OF SERVICE, HELD TO AN ABSOLUTE MINIMUM DURATION OF TIME, AND ONLY AFTER HAVING NOTIFIED THE BUILDING OPERATIONS MANAGEMENT AT LEAST TWO WEEKS IN ADVANCE AND HAVING RECEIVED THEIR PERMISSION IN WRITING, AT LEAST TWO WEEKS PRIOR TO THE SCHEDULED SHUTDOWN. COMMUNICATIONS SHALL BE RELAYED THROUGH THE PROJECT OFFICER.
13. ELECTRICAL CONTRACTOR SHALL RING OUT AND IDENTIFY ALL CIRCUITS REMAINING IN CONTRACT AREA, AFTER DEMOLITION. REMOVE ALL CIRCUITS BACK TO POINT OF SOURCE. MARK PANEL CIRCUITS NO LONGER IN USE "SPARE".

GENERAL NOTES:

1. THE FULL DEMOLITION SCOPE IS NOT SPECIFICALLY SHOWN ON THE DRAWINGS, PROVIDE DEMOLITION WORK CONSIDERED NECESSARY FOR THE COMPLETION OF THE WORK. SURVEY THE PREMISES TO ACCURATELY DETERMINE THE FULL SCOPE OF THE REMOVAL AND DISPOSAL WORK. NO ADDITIONAL PAYMENTS WILL BE MADE DUE TO CONTRACTOR'S FAILURE TO ADEQUATELY SURVEY THE PREMISES.
2. CONTRACTOR TO REMOVE AND PROPERLY DISPOSE OF EQUIPMENT FROM SITE INDICATED FOR DEMOLITION, UNLESS OTHERWISE DIRECTED BY THE AUTHORITY.
3. THE MECHANICAL CONTRACTOR SHALL PROVIDE POWER SUPPLIES, ELECTRICAL WIRING AND CONDUIT FOR POWER AND CONTROL TO PNEUMATIC OR MOTORIZED DAMPER AND VALVE OPERATORS, THERMOSTATS, AUTOMATIC CONTROL INSTRUMENTATION. COORDINATE WITH THE ELECTRICAL CONTRACTOR TO PROVIDE A COMPLETE AND FUNCTIONAL SYSTEM.
4. FOR POWERED EQUIPMENT INTENDED FOR DEMOLITION, THE CONTRACTOR SHALL COORDINATE SHUT-OFF POWER SUPPLIES AND DISCONNECT SWITCHES ASSOCIATED WITH THE EQUIPMENT TO BE DISCONNECTED. RECONNECT ELECTRICAL POWER TO NEW EQUIPMENT AFTER INSTALLATION. PROVIDE ELECTRICAL MATERIAL AND LABOR AS REQUIRED FOR A COMPLETE AND FUNCTIONAL INSTALLATION.
5. TEMPORARY SHUTDOWNS OF SERVICE OF EXISTING ELECTRICAL, STEAM, HEATING, AIR CONDITIONING AND VENTILATION SYSTEMS SHALL BE PERFORMED WITH A MINIMUM OF DISRUPTION OF SERVICE, HELD TO AN ABSOLUTE MINIMUM DURATION OF TIME, AND ONLY AFTER HAVING NOTIFIED THE BUILDING OPERATIONS MANAGEMENT AT LEAST TWO WEEKS IN ADVANCE AND HAVING RECEIVED THEIR PERMISSION IN WRITING, AT LEAST TWO WEEKS PRIOR TO THE SCHEDULED SHUTDOWN. COMMUNICATIONS SHALL BE RELAYED THROUGH THE OWNER'S REPRESENTATIVE.
6. LOAD CALCULATIONS HAVE BEEN PERFORMED IN ACCORDANCE WITH GENERALLY ACCEPTED ENGINEERING STANDARDS, SPECIFICALLY ASHRAE HANDBOOK - FUNDAMENTALS.
7. CONTRACTOR SHALL PERFORM ALL TESTS AND STARTUP PROCEDURES FOR EACH VENTILATION SYSTEM IN ACCORDANCE WITH THE MANUFACTURER AND SPECIFICATIONS.
8. ALL THERMOSTATIC CONTROLS SHALL BE TESTED FOR FUNCTIONALITY AND PROPER OPERATION AS REQUIRED BY NYS ECC.
9. ELECTRIC MOTORS SHALL COMPLY WITH THE REQUIREMENTS OF THE ENERGY POLICY ACT OF 1992 AS SHOWN IN ASHRAE 90.1-2013 TABLE #10.8.
10. IT IS THE RESPONSIBILITY OF THE MECHANICAL CONTRACTOR TO PROVIDE CONTROL WIRING. THE MECHANICAL CONTRACTOR SHALL ALSO PROVIDE ALL POWER SUPPLIES, ELECTRICAL WIRING AND CONDUIT FOR POWER AND CONTROL TO ALL VALVE OPERATORS, THERMOSTATS AND AUTOMATIC CONTROL INSTRUMENTATION. ELECTRICAL CONTRACTOR TO INSTALL AND ROUTE POWER WIRING FOR EACH MECHANICAL SYSTEM.
11. MOUNTING HEIGHTS FOR ASSOCIATED MECHANICAL THERMOSTAT CONTROLS, ETC. SHALL MEET THE AMERICANS WITH DISABILITIES ACT ACCESSIBILITY GUIDELINES FOR BUILDING AND FACILITIES. MOUNTING HEIGHTS FOR ALL THERMOSTATS, ETC SHALL BE 48" AFF.

HVAC DESIGN CRITERIA:

A. SITE (BASED ON NEAREST AVAILABLE DATA: ASHRAE 2013 HANDBOOK CLIMATIC DESIGN INFORMATION, WESTCHESTER CO, NY):
   1. 41.07°N, 73.71°W
   2. ELEVATION: 397 FT
   3. CLIMATE ZONE 5A.

B. OUTSIDE DESIGN CONDITIONS (BASED ON NEAREST AVAILABLE DATA: ASHRAE 2013 CLIMATIC DESIGN INFORMATION, WESTCHESTER CO, NY):
   1. HEATING DB (99.6%): 9.0°F DB
   2. COOLING DB/MCWB (1%): 86.5°F DB, 72.1°F WB

C. INSIDE DESIGN CONDITIONS:
   1. HEATING INDOOR SETPOINT: 72°F
   2. COOLING INDOOR SETPOINT: 78°F, 60% RH

D. ACOUSTICS:
   1. SOUND ACOUSTIC RATINGS TO BE MINIMIZED.

E. FILTRATION: MERV 13.

F. DEMAND CONTROLLED VENTILATION NOT REQUIRED PER ECCNYS C403.2.6.1 EXCEPTION #3.

SUMMARY OF WORK:

1. REMOVE EXISTING ROOFTOP EQUIPMENT UNITS.
2. PROVIDE NEW HEAT RECOVERY VRF EQUIPMENT FOR ALL OCCUPIED SPACES.
3. PROVIDE NEW DOAS UNIT FOR ADEQUATE FRESH AIR FOR THE ENTIRE BUILDING.
4. PROVIDE NEW EXHAUST FAN AND VENT FOR BATHROOM MODIFICATION.
5. PROVIDE NEW HVAC BMS CONTROLLER AND END USER DEVICES AND INTERLOCK TO EXISTING HEATING PLANT.
6. PROVIDE NEW ZONE VALVES FOR EXISTING PERIMETER BASEBOARD HEAT.
7. PROVIDE NEW CABINET UNIT HEATER FOR STAIRWELL A.

HVAC NOTES:

1. PROVIDE LABOR, MATERIALS, TOOLS, MACHINERY, EQUIPMENT, AND SERVICES NECESSARY TO COMPLETE THE HVAC WORK UNDER THIS CONTRACT. ALL SYSTEMS AND EQUIPMENT SHALL BE COMPLETE IN EVERY ASPECT AND ALL ITEMS OF MATERIAL, EQUIPMENT AND LABOR SHALL BE PROVIDED FOR A FULLY OPERATIONAL SYSTEM AND READY FOR USE. COORDINATE THE WORK WITH THE WORK OF THE OTHER SUBCONTRACTORS IN ORDER TO RESOLVE ALL CONFLICTS WITHOUT IMPEDING THE JOB PROGRESS.
2. EXAMINE THE ARCHITECTURAL, STRUCTURAL, AND ELECTRICAL DRAWINGS AND OTHER DIVISIONS, AND SECTIONS OF THE SPECIFICATIONS IN ORDER TO DETERMINE THE EXTENT OF THE WORK REQUIRED TO BE COMPLETED UNDER THIS DIVISION. FAILURE TO EXAMINE ALL THE CONTRACT DOCUMENTS FOR THIS PROJECT WILL NOT RELIEVE THIS CONTRACTOR OF HIS RESPONSIBILITIES TO PERFORM THE WORK REQUIRED FOR A COMPLETE FULLY OPERATIONAL AND SATISFACTORY INSTALLATION.
3. START-UP SERVICES SHALL BE INCLUDED.
4. ALL SYSTEMS, EQUIPMENT AND SERVICES SPECIFIED HEREIN SHALL BE PROVIDED COMPLETE AND READY FOR USE. ALL EQUIPMENT, DUCTWORK, PIPING, DAMPERS, OUTLETS ARE NEW, FURNISHED AND INSTALLED BY THIS CONTRACTOR, UNLESS OTHERWISE NOTED.
5. DUCTWORK AND PIPING ARE SHOWN DIAGRAMMATICALLY AND DO NOT SHOW ALL OFFSETS, DROPS AND RISES OF RUNS. THE CONTRACTOR SHALL ALLOW IN HIS PRICE FOR ROUTING OF DUCTWORK AND PIPING TO AVOID OBSTRUCTIONS. EXACT LOCATIONS ARE SUBJECT TO APPROVAL OF ENGINEER. COORDINATION WITH THE EXISTING SERVICES, INCLUDING THOSE OF OTHER SUBCONTRACTORS IS REQUIRED. PROVIDE COORDINATION DRAWINGS SHOWING ALL TRADES WORK AND EXISTING CONDITION.
6. INSTALL WORK SO AS TO BE READILY ACCESSIBLE FOR OPERATION, MAINTENANCE AND REPAIR. MINOR DEVIATIONS FROM DRAWINGS MAY BE MADE TO ACCOMPLISH THIS, BUT CHANGES INVOLVING EXTRA COST SHALL NOT BE MADE WITHOUT APPROVAL.
7. VERIFY FINAL LOCATIONS FOR ROUGH WORK WITH FIELD MEASUREMENTS AND WITH THE REQUIREMENTS OF THE ACTUAL EQUIPMENT BEING CONNECTED.
8. PROVIDE A COMPLETE SYSTEM OF VIBRATION ISOLATION FOR EACH ITEM OF HVAC EQUIPMENT AND APPARATUS AS SPECIFIED HEREIN, AS SHOWN ON THE DRAWINGS AND AS NEEDED FOR A COMPLETE AND PROPER INSTALLATION.
9. THE FINAL ACCEPTANCE WILL BE MADE AFTER THE CONTRACTOR HAS ADJUSTED HIS EQUIPMENT, BALANCED THE VARIOUS SYSTEMS, DEMONSTRATED THAT IT FULFILLS THE REQUIREMENTS OF THE DRAWINGS AND SPECIFICATIONS AND HAS FURNISHED ALL THE REQUIRED CERTIFICATES OF INSPECTION AND APPROVAL.
10. CONTRACTOR IS RESPONSIBLE TO ATTEND COORDINATION MEETING WITH ALL TRADES TO DETERMINE LOCATIONS OF DEVICES AND DISCOVER IF ANY CONFLICTS MAY EXIST.
11. ALL PIPING EXPOSED OR INSULATED, DUCTWORK, CONDUIT AND CONTROL WIRING SHALL BE CONCEALED IN CEILINGS, WALLS AND FLOORS OR CONCEALED IN NEW SOFFITS OR FRAMED ENCLOSURES.
12. ALL WORK SHALL BE PERFORMED IN STRICT ACCORDANCE WITH THE REQUIREMENTS OF THE 2020 NYS BUILDING CODE, 2020 NYS MECHANICAL CODE, AND 2020 NYS ENERGY CONSERVATION CODE, AND ALL GOVERNING LOCAL CODES, LAWS, AND REGULATIONS.
13. PROVIDE A COMPLETE OPERABLE SYSTEM IN A WORKMANLIKE MANNER. OUTLINE DESCRIPTION AND EQUIPMENT; DO NOT LIMIT CONTRACTOR'S LIABILITY FOR THE INSTALLATION OF A COMPLETE OPERABLE SYSTEM.
14. VISIT THE SITE AND BECOME FAMILIAR WITH ALL EXISTING CONDITIONS THAT MAY AFFECT THE WORK. NO ADDITIONAL COMPENSATION WILL BE DUE FOR FAILURE TO DO SO.
15. CONTRACTOR TO BE RESPONSIBLE FOR REVIEWING THE FULL SET OF BID DOCUMENTS TO BE AWARE OF THE TOTAL SCOPE PRIOR TO SUBMITTING BID. ALL WORK SHOWN ON THE DRAWINGS NOT SPECIFICALLY CALLED OUT AS EXISTING SHALL BE CONSIDERED WORK TO BE PERFORMED UNDER THIS CONTRACT.
16. BIDDERS, BEFORE SUBMITTING A PROPOSAL, SHALL VISIT AND CAREFULLY EXAMINE THE SITE TO BECOME FAMILIAR WITH THE EXISTING CONDITIONS AND WITH THE DIFFICULTIES THAT WILL ATTEND THE EXECUTION OF THIS WORK. SUBMISSION OF A PROPOSAL WILL BE CONSTRUED AS EVIDENCE THAT SUCH EXAMINATION HAS BEEN MADE. LATER CLAIMS WILL NOT BE RECOGNIZED FOR EXTRA LABOR, EQUIPMENT OR MATERIALS REQUIRED BECAUSE OF DIFFICULTIES ENCOUNTERED. NO ALLOWANCE WILL SUBSEQUENTLY BE MADE TO THE CONTRACTOR BY REASON OF ANY ERROR DUE TO THE CONTRACTOR'S NEGLECT TO COMPLY WITH THIS REQUIREMENT. REPORT ANY DISCREPANCIES BETWEEN DRAWINGS AND FIELD CONDITIONS TO THE ENGINEER.
17. BEFORE COMMENCING WORK, THE CONTRACTOR SHALL FILE ALL REQUIRED CERTIFICATES OF INSURANCE WITH THE LOCAL AUTHORITY HAVING JURISDICTION. OBTAIN ALL REQUIRED PERMITS AND PAY ALL FEES REQUIRED.
18. THE CONTRACTOR SHALL PERFORM ALL CUTTING AND PATCHING REQUIRED TO COMPLETE THE WORK OR TO MAKE ITS PARTS FIT TOGETHER PROPERLY WITHOUT COMPROMISING THE QUALITY OF THE WORK. RESTORE WALLS AND CEILINGS TO MATCH EXISTING.
19. THE CONTRACTOR SHALL BE RESPONSIBLE FOR ADEQUATELY BRACING AND PROTECTING ALL WORK DURING CONSTRUCTION AGAINST DAMAGE, BREAKAGE, COLLAPSE, DISTORTIONS, AND OFF ALIGNMENTS ACCORDING TO CODES AND STANDARDS OF GOOD PRACTICE.
20. THE TERM "FINISH FLOOR" SHALL MEAN THE NORMAL FINISHED SURFACE OF THE FLOOR LEVEL. ALL ELEVATIONS GIVEN FOR EXISTING BUILDINGS ARE TO FINISHED FLOOR. THE CONTRACTOR SHALL FIELD VERIFY ALL ELEVATIONS FOR EXISTING STRUCTURES PRIOR TO THE COMMENCEMENT OF WORK.
21. THE CONTRACTOR SHALL PATCH AND REPAIR ALL FLOORS, WALLS, CEILINGS, ETC. DAMAGED OR EXPOSED DUE TO WORK OR REMOVALS AND FINISH TO MATCH ADJOINING SURFACES.
22. WHERE MANUFACTURERS NAMES AND PRODUCT NUMBERS ARE INDICATED ON THE DRAWINGS IT SHALL BE CONSTRUED TO MEAN THE ESTABLISHING OF QUALITY AND PERFORMANCE STANDARDS OF SUCH ITEMS. ALL OTHER PRODUCTS MUST BE SUBMITTED TO THE ENGINEER FOR APPROVAL BEFORE THEY SHALL BE DEEMED EQUAL.
23. DRAWINGS ARE NOT TO BE SCALED. USE DIMENSIONS ONLY. ALL DIMENSIONS AND CONDITIONS SHOWN AND ASSUMED ON THE DRAWINGS MUST BE VERIFIED AT THE SITE BY THE CONTRACTOR BEFORE ORDERING ANY MATERIAL OR DOING ANY WORK. ANY DISCREPANCIES IN THE DRAWINGS AND SPECIFICATIONS SHALL BE REPORTED TO THE ENGINEER. NO CHANGE IN DRAWINGS OR SPECIFICATIONS IS PERMISSIBLE WITHOUT THE WRITTEN CONSENT OF THE ENGINEER.
24. ALL WORK ON THESE DRAWINGS SHALL BE CONSIDERED NEW WORK WHETHER STATED OR NOT EXCEPT WHERE SPECIFICALLY NOTED AS "EXISTING TO REMAIN".
25. DETAILS NOT SHOWN OR SPECIFIED, BUT NECESSARY FOR PROPER AND ACCEPTABLE CONSTRUCTION, INSTALLATION OR OPERATION OF ANY PART OF THE WORK AS DETERMINED BY THE ENGINEER, SHALL BE INCLUDED IN THE WORK THE SAME AS IF HEREIN SPECIFIED OR INDICATED.
26. ALL WORK SHALL BE INSTALLED SO THAT ALL PARTS REQUIRED ARE READILY ACCESSIBLE FOR INSPECTION, OPERATION, MAINTENANCE AND REPAIR.
27. CONTRACTOR SHALL KEEP WORK SITE FREE FROM DEBRIS AND ACCUMULATED REFUSE, AND SHALL HAVE SOLE RESPONSIBILITY FOR PROTECTING ALL DANGEROUS AREAS FROM ENTRY BY UNAUTHORIZED PARTIES. WORK AREA WILL BE LEFT BROOM CLEAN AT THE END OF COMPLETION OF WORK AND UNTIL THE SPACE IS READY TO BE OCCUPIED.
28. PROVIDE BARRICADES AROUND WORK AREAS AS REQUIRED TO PREVENT UNAUTHORIZED PERSONS FROM ENTERING THEREIN.
29. THE WORD "PROVIDE" USED ON DRAWINGS AND SPECIFICATIONS ASSOCIATED WITH THIS PROJECT MEANS "FURNISH AND INSTALL". WHEN ONLY ONE PART OF ACTION IS REQUIRED, EITHER "FURNISH" OR "INSTALL" WILL BE USED ACCORDINGLY (TYP., U.O.W.N.).
30. ALL DISCONNECT SWITCHES, STARTERS, AND VARIABLE FREQUENCY DRIVES SHALL BE FURNISHED BY MECHANICAL CONTRACTOR AND INSTALLED BY ELECTRICAL CONTRACTOR.
31. PROVIDE OPERATING AND MAINTENANCE MANUALS FOR ALL EQUIPMENT SPECIFIED IN THE SCHEDULES ON THIS DRAWING TO THE BUILDING OWNER WITHIN 90 DAYS AFTER SYSTEM ACCEPTANCE.

ABBREVIATIONS

ABBREVIATION:	DESCRIPTION:
A	AMPERE
AC	AIR CONDITIONING
AHU	AIR HANDLING UNIT
AMP	AMPERE
ASHRAE	AMERICAN SOCIETY OF HEATING, REFRIGERATING, AND AIR CONDITIONING ENGINEERS
ASME	AMERICAN SOCIETY OF MECHANICAL ENGINEERS
AUX	AUXILIARY
BHP	BRAKE HORSEPOWER
BLR	BOILER
BMS	BUILDING MANAGEMENT SYSTEM
BTU	BRITISH THERMAL UNIT
CFM	CUBIC FEET PER MINUTE
DB	DRY BULB
DDC	DIRECT DIGITAL CONTROL
DEG, °	DEGREES
DP	DEW POINT
DWG	DRAWING
DX	DIRECT EXPANSION
EA	EXHAUST AIR
EAT	ENTERING AIR TEMPERATURE
EER	ENERGY EFFICIENCY RATIO
EFF	EFFICIENCY
ESP	EXTERNAL STATIC PRESSURE
F	FAHRENHEIT
FLA	FULL LOAD AMPS
FPM	FEET PER MINUTE
FT	FEET
GAL	GALLON
GALV	GALVANIZED
GPM	GALLONS PER MINUTE
GWB	GYPSUM WALL BOARD
HOA	HAND/OFF/AUTO
HDW	HARDWARE
HP	HEAT PUMP
HR	HOUR
HP	HORSEPOWER
HVAC	HEATING, VENTILATION, AND AIR CONDITIONING
HWS	HOT WATER SUPPLY
HWR	HOT WATER RETURN
HZ	HERTZ
IEER	INTEGRATED ENERGY EFFICIENCY RATIO
IN	INCHES
KW	KILOWATTS
LxWxH	LENGTH BY WIDTH BY HEIGHT
LAT	LEAVING AIR TEMPERATURE
LB	POUND
LF	LINEAR FEET
LWT	LEAVING WATER TEMPERATURE
MAX	MAXIMUM
MBH	1,000 BTU/H
MCA	MINIMUM CIRCUIT AMPACITY
MHP	MOTOR HORSEPOWER
MIN	MINIMUM, MINUTE
MOP	MAXIMUM OVER-CURRENT PROTECTION
OAT	OUTSIDE AIR TEMPERATURE
NA	NOT APPLICABLE
NK	NECK
NTS	NOT TO SCALE
PH	PHASE
PSIA	POUNDS PER SQUARE INCH, ABSOLUTE
PSIG	POUNDS PER SQUARE INCH, GAUGE
PT	POINT
QTY	QUANTITY
RA	RETURN AIR
RM	ROOM
S	SECONDS
SD	SMOKE DAMPER
SEER	SEASONAL ENERGY EFFICIENCY RATIO
SENS	SENSIBLE
SF	SQUARE FEET
SPEC	SPECIFICATION
TEMP, T	TEMPERATURE
TON	12,000 BTU/H COOLING CAPACITY
TYP	TYPICAL
V	VENT, VOLTS, OR VOLUME
VRF	VARIABLE REFRIGERANT FLOW
W	WATTS, WIDTH
WB	WET BULB

SYMBOLS

- 4 WAY CEILING CASSETTE, RECESSED
- 1 WAY CEILING CASSETTE, RECESSED
- DEMOLISH
- EXISTING TO REMAIN
- NEW PIPE, DUCTWORK OR EQUIPMENT
- PIPE DROPPING DOWN
- PIPE RISING UP
- AIR VENT
- BALL VALVE
- CHECK VALVE
- FLOW IN DIRECTION OF ARROW
- GATE VALVE
- MODULATING CONTROL VALVE
- PRESSURE GAUGE WITH NEEDLE VALVE COCK
- STRAINER
- THERMOMETER
- UNION
- RL — REFRIGERANT LINESET (LIQUID & GAS)
- D — DRAIN
- T — TEMPERATURE SENSOR/THERMOSTAT
- CFM TAG NK SIZE — AIR INLET/OUTLETS TAG IDENTIFICATION

No.	Date	Revisions
0	02-18-25	RFP SET

Drawn by WM/AW
Checked by PC/ERF
Project No. 40034G
Scale AS SHOWN
Date 02/18/2025

GREENMAN PEDERSEN, INC
2 EXECUTIVE BOULEVARD
SUFFERN, NY

Mechanical, Electrical & Structural Engineer:

ATZL, NASHER, & ZIGLER
234 North Main Street
New City, NY 10956

Civil Engineer:

RENOVATION OF ROCKLAND GREEN ADMINISTRATIVE HEADQUARTERS AND CONSTRUCTION OF AN IMMERSIVE THEATRE EXPERIENCE

TOWN OF CLARKSTOWN
COUNTY OF ROCKLAND

172 MAIN STREET
NYACK, NY 10994

MICHAEL SHILALE ARCHITECTS, L.L.P.
140 Park Avenue New City, NY 10956 Tel 845-708-9200
www.shilale.com

© COPYRIGHT, MICHAEL SHILALE ARCHITECTS, ALL RIGHTS RESERVED.

Drawing Title
MECHANICAL GENERAL NOTES, SYMBOLS, ABBREVIATIONS

Drawing No.
M001

MECHANICAL VENTILATION SCHEDULE

GENERAL					PER MCNYS															
ROOM NUMBER	ROOM NAME	ROOM AREA (SF)	CEILING HEIGHT (IN)	ROOM VOLUME (CF)	OCCUPANCY	OCCUPANT LOAD/ 1,000 SF	# OF OCCUPANTS	REQUIRED CFM/ OCCUPANT	REQUIRED CFM/SF	REQUIRED EXHAUST CFM/SF	REQUIRED EXHAUST TOILETS		BREATHING ZONE OUTDOOR AIRFLOW	ZONE DISTRIBUTION EFFECTIVENESS	MIN. REQUIRED OA CFM	ACTUAL OA CFM	ACTUAL TOTAL CFM	MIN. REQUIRED EXHAUST CFM	ACTUAL EXHAUST CFM
											# OF FIXTURES	CFM PER FIXTURE							
FIRST FLOOR																			
2010	BREAK ROOM	282	96.0	2,256	CAFETERIA	100	29	7.5	0.18	NA	NA	NA	268	1.0	268	275	612	NA	NA
2001	OFFICE	205	96.0	1,640	OFFICE SPACES	5	2	5	0.06	NA	NA	NA	22	1.0	22	30	90	NA	NA
2013	WOMEN'S TOILET	31	96.0	248	TOILET ROOMS - PUBLIC (CONTINUOUS)	0	0	0	0	NA	1	50	0	NA	NA	NA	NA	50	75
2014	MEN'S TOILET	22	96.0	173	TOILET ROOMS - PUBLIC (CONTINUOUS)	0	0	0	0	NA	1	50	0	NA	NA	NA	NA	50	75
2003	OPEN OFFICE	513	96.0	4,104	OFFICE SPACES	5	1	5	0.06	NA	NA	NA	36	1.0	36	50	213	NA	NA
2016	STORAGE ROOM	114	96.0	912	STORAGE ROOMS	0	0	0	0.12	NA	NA	NA	14	1.0	14	15	45	NA	NA
2015	MECHANICAL ROOM	70	112.0	653	MECHANICAL/ELECTRICAL	NA	0	NA	NA	NA	NA	NA	NA	NA	NA	NA	26	NA	NA
2005	NEW ACCESSIBLE RESTROOM	61	96.0	488	TOILET ROOMS - PUBLIC (CONTINUOUS)	0	0	0	0	NA	1	50	0	1.0	0	0	23	50	75
2000	ENTRANCE LOBBY	369	100.0	3,075	MAIN ENTRY LOBBIES	10	4	5	0.06	NA	NA	NA	42	1.0	42	50	353	NA	NA
2009	HC TOILET	47	96.0	376	TOILET ROOMS - PUBLIC (CONTINUOUS)	0	0	0	0	NA	1	50	0	NA	NA	NA	NA	50	75
2017	ELEC/TEL1	61	100.0	508	MECHANICAL/ELECTRICAL	NA	NA	NA	NA	NA	NA	NA	NA	NA	NA	NA	NA	NA	NA
2008	EDUCATIONAL EXHIBIT	976	100.0	8,133	MULTIUSE ASSEMBLY	100	48	7.5	0.06	NA	NA	NA	419	1.0	419	450	1005	NA	NA
2012	COMP ROOM	154	100.0	1,283	MECHANICAL/ELECTRICAL	NA	NA	NA	NA	NA	NA	NA	NA	NA	NA	NA	NA	NA	NA
2011	THEATER	415	100.0	3,458	MUSIC/THEATER/DANCE	35	28	10	0.06	NA	NA	NA	305	1.0	305	320	656	NA	NA
ST1	STAIRWELL A	129	112.0	1,204	STAIRWELLS	NA	NA	NA	NA	NA	NA	NA	NA	NA	NA	NA	NA	NA	NA
ST2	STAIRWELL B	121	112.0	1,129	STAIRWELLS	NA	NA	NA	NA	NA	NA	NA	NA	NA	NA	NA	NA	NA	NA
2012A	STORAGE ROOM	105	100.0	875	STORAGE ROOMS	0	0	0	0.12	NA	NA	NA	13	1.0	13	15	500	NA	NA
2018	CORRIDOR	45	96.0	360	CORRIDORS	0	0	0	0.06	NA	NA	NA	3	1.0	3	10	280	NA	NA
2019	CORRIDOR	96	96.0	768	CORRIDORS	0	0	0	0.06	NA	NA	NA	6	1.0	6	10	280	NA	NA
SECOND FLOOR																			
207	OFFICE	264	102.0	2,244	OFFICE SPACES	5	2	5	0.06	NA	NA	NA	26	1.0	26	35	278	NA	NA
208	OFFICE	120	102.0	1,020	OFFICE SPACES	5	1	5	0.06	NA	NA	NA	12	1.0	12	20	120	NA	NA
209	OFFICE	112	102.0	952	OFFICE SPACES	5	1	5	0.06	NA	NA	NA	12	1.0	12	20	119	NA	NA
210	OFFICE	112	102.0	952	OFFICE SPACES	5	1	5	0.06	NA	NA	NA	12	1.0	12	20	126	NA	NA
205	OFFICE	286	102.0	2,431	OFFICE SPACES	5	2	5	0.06	NA	NA	NA	27	1.0	27	35	232	NA	NA
204	OFFICE	153	102.0	1,301	OFFICE SPACES	5	1	5	0.06	NA	NA	NA	14	1.0	14	25	136	NA	NA
203	OFFICE	114	102.0	969	OFFICE SPACES	5	1	5	0.06	NA	NA	NA	12	1.0	12	20	87	NA	NA
202	OFFICE	114	102.0	969	OFFICE SPACES	5	1	5	0.06	NA	NA	NA	12	1.0	12	20	90	NA	NA
206A	RESTROOM	50	102.0	425	TOILET ROOMS - PUBLIC (CONTINUOUS)	0	0	0	0	NA	3	50	0	NA	NA	NA	NA	150	200
206B	RESTROOM	50	102.0	425	TOILET ROOMS - PUBLIC (CONTINUOUS)	0	0	0	0	NA	3	50	0	NA	NA	NA	NA	150	200
206C	STORAGE ROOM	23	102.0	196	STORAGE ROOMS	0	0	0	0.12	NA	NA	NA	3	1.0	3	NA	15	NA	NA
206D	STORAGE ROOM	35	102.0	298	STORAGE ROOMS	0	0	0	0.12	NA	NA	NA	4	1.0	4	NA	16	NA	NA
201	OPEN OFFICE	1,000	102.0	8,500	OFFICE SPACES	5	5	5	0.06	NA	NA	NA	85	1.0	85	120	369	NA	NA
215	KITCHENETTE	48	102.0	408	KITCHENETTE	NA	NA	NA	NA	0.25	NA	NA	NA	NA	NA	NA	348	12	50
211A	JANITORY CLOSET	16	102.0	136	STORAGE ROOMS	0	0	0	0.12	NA	NA	NA	2	1.0	2	NA	17	NA	NA
214	CONFERENCE	797	102.0	6,775	CONFERENCE ROOMS	50	3	5	0.06	NA	NA	NA	63	1.0	63	80	239	NA	NA
200	RECEPTION	158	102.0	1,343	RECEPTION AREAS	30	5	5	0.06	NA	NA	NA	34	1.0	34	50	125	NA	NA
200A	WAITING ROOM	131	102.0	1,115	MAIN ENTRY LOBBIES	10	2	5	0.06	NA	NA	NA	18	1.0	18	35	120	NA	NA
212	RESTROOM	38	102.0	321	TOILET ROOMS - PUBLIC (CONTINUOUS)	0	0	0	0	NA	1	50	0	1.0	0	NA	21	50	75
213	RESTROOM	38	102.0	321	TOILET ROOMS - PUBLIC (CONTINUOUS)	0	0	0	0	NA	1	50	0	1.0	0	NA	19	50	75
C200	CORRIDOR	127	102.0	1,080	CORRIDORS	0	0	0	0.06	NA	NA	NA	8	1.0	8	10	100	NA	NA
C210	CORRIDOR	62	102.0	527	CORRIDORS	0	0	0	0.06	NA	NA	NA	4	1.0	4	10	100	NA	NA

NOTES:
1. CALCULATIONS ARE BASED ON THE 2020 MCNYS.

DEDICATED OUTDOOR AIR SYSTEM SCHEDULE

UNIT TAG	LOCATION	OUTSIDE AIR (CFM)	TOTAL SUPPLY AIRFLOW (CFM)	MINIMUM OUTSIDE AIRFLOW		REFRIGERANT		DX COOLING					HEAT PUMP HEATING			GAS FURNACE HEATING				FILTER	ELECTRICAL			UNIT WEIGHT LBS	UNIT DIMENSIONS (LxWxH, IN)	BASIS OF DESIGN		NOTES
				COOLING	HEATING	TYPE	CHARGE (LB)	EADB (°F)	EAWB (°F)	LADB (°F)	LAWB (°F)	TOTAL CAP (MBH)	EADB (°F)	LADB (°F)	REQ'D TOTAL CAP (MBH)	EADB (°F)	LADB (°F)	INPUT CAP (MBH)	OUTPUT CAP (MBH)	MERV	MCA	MAX FUSE SIZE	V/PH/HZ			MFGR	MODEL NUMBER	
DOAS - 1	ROOF	1818	1700	922	922	R-454B	21.3	80.7	69.1	49.1	49	92	44.8	98.7	94.6	44.8	106.3	125	100	13	53	80	208/3/60	2078	140x52x55	TRANE	OABE108A4-D1B4G1KE-A1D00AFAKE4D10E3C5A0	SEE NOTES

DOAS SCHEDULE NOTES:

1. REFER TO SPECIFICATION SECTION 237223 FOR ANY ADDITIONAL INFORMATION NOT INCLUDED BELOW.
2. PROVIDE DOUBLE WALL 2" R13 BASE CONSTRUCTION ON ALL CABINET SIDES AND BOTTOM PANEL
3. PROVIDE A 6 INCH GAP BETWEEN EVAPORATOR AND HOT GAS REHEAT COIL TO PREVENT REEVAPORATING OF CONDENSATE.
4. PROVIDE RUBBER SLEEVES ON CAPILLARIES OFF OF THE DISTRIBUTOR TUBES TO PREVENT LEAKS
5. PROVIDE A 6 INCH FILTER BANK USING MERV 8 AND MERV 13 FILTERS
6. UNIT SHALL BE SEISMICALLY RATED WITH WIND RESTRAINTS.
7. PROVIDE PIEZO RINGS ON ALL FANS FOR AIRFLOW MONITORING
8. UNIT SHALL HAVE HUMIDITY CONTROL WITH A DEW POINT BELOW 47° AND THE ABILITY TO DECOUPLE SENSIBLE AND LATENT LOADS.
9. PROVIDE DIRECT DRIVE MOTORS FOR BOTH EXHAUST AND SUPPLY FANS
10. PROVIDE STAINLESS STEEL DRAIN PAN BELOW COOLING COIL FOR NON-CORROSIVE CONDENSATION CONTROL
11. PROVIDE ACTIVE HEAD PRESSURE CONTROL IN CONDENSER FAN
12. UNIT SHALL HAVE FACTORY INSTALLED UC600 BACNET CONTROLS.
13. PROVIDE FULLY MODULATING HOT GAS REHEAT
14. UNIT SHALL BE CAPABLE OF STARTING IN 45 SECONDS AFTER POWER LOSS

DEDICATED OUTDOOR AIR SYSTEM SCHEDULE (CONTINUED)

UNIT TAG	ENERGY RECOVERY													
	TYPE	ENERGY RECOVERY CFM	SUMMER CONDITIONS						WINTER CONDITIONS					
			OUTSIDE DB/WB °F	RETURN DB/WB °F	EXHAUST/ LEAVING DB/WB °F	SUPPLY/ MIXED DB/WB °F	TOTAL EFFECTIVENESS %	TOTAL RECOVERED CAP (MBH)	OUTSIDE DB/WB °F	RETURN DB/WB °F	EXHAUST/ LEAVING DB/WB °F	SUPPLY/ MIXED DB/WB °F	TOTAL EFFECTIVENESS %	TOTAL RECOVERED CAP (MBH)
DOAS - 1	WHEEL	1700	95.0/75.0	75.0/65.0	90.6/72.5	82.4/69.5	72	35.85	0.0/-2.0	65.0/55.0	20.8/20.7	41.4/36.4	69.0	95.62

No.	Date	Revisions
0	02-18-25	RFP SET

Drawn by WM/AW
Checked by PC/ERF
Project No. 40034G
Scale AS SHOWN
Date 02/18/2025

Mechanical, Electrical & Structural Engineer: GREENMAN PEDERSEN, INC 2 EXECUTIVE BOULEVARD SUFFERN, NY 10901

Civil Engineer: ATZL, NASHER, & ZIGLER 234 North Main Street New City, NY 10956

RENOVATION OF ROCKLAND GREEN ADMINISTRATIVE HEADQUARTERS AND CONSTRUCTION OF AN IMMERSIVE THEATRE EXPERIENCE

172 MAIN STREET NANUET, NY 10954

TOWN OF CLARKSTOWN COUNTY OF ROCKLAND

MICHAEL SHILALE ARCHITECTS, L.L.P.
140 Park Avenue New City, NY 10956 Tel 845-708-9200
www.shilale.com

© COPYRIGHT, MICHAEL SHILALE ARCHITECTS, ALL RIGHTS RESERVED.

Drawing Title
MECHANICAL SCHEDULES - 1

Drawing No.
M002

INDOOR VRF UNIT SCHEDULE

UNIT TAG	ROOM #	ROOM NAME	CONFIGURATION	TOTAL SUPPLY AIRFLOW (CFM)	REQUIRED (BTU/H)		CAPACITY (BTU/H)		REFRIGERANT	REFR. SAFTEY CLASS	V/PH/HZ	POWER COOLING (kW)	POWER HEATING (kW)	MCA / MFS	UNIT WEIGHT LBS	UNIT DIMENSIONS (LxW, IN)	UNIT DEPTH (IN)	BASIS OF DESIGN		NOTES
					COOLING	HEATING	COOLING	HEATING										MFGR	MODEL	
AC 1-01	2003	OPEN OFFICE	CEILING-CASSETTE (FOUR WAY)	280	2,760	1,470	4,648.3	4,407.4	R410A	A1	208/1/60	0.02	0.02	0.24/15	28.9	22-7/16x22-7/16	8-3/16	TRANE	TPLFYP005FM140B	1,2,3,4,5,6,7,8
AC 1-02	2003	OPEN OFFICE	CEILING-CASSETTE (FOUR WAY)	280	2,760	1,470	4,648.3	4,407.4	R410A	A1	208/1/60	0.02	0.02	0.24/15	28.9	22-7/16x22-7/16	8-3/16	TRANE	TPLFYP005FM140B	1,2,3,4,5,6,7,8
AC 1-03	2016	STORAGE	CEILING-CASSETTE (FOUR WAY)	280	1,080	330	4,648.3	4,407.4	R410A	A1	208/1/60	0.02	0.02	0.24/15	28.9	22-7/16x22-7/16	8-3/16	TRANE	TPLFYP005FM140B	1,2,3,4,5,6,7,8
AC 1-04	2019	CORRIDOR	CEILING-CASSETTE (FOUR WAY)	280	2,280	1,570	4,648.3	4,407.4	R410A	A1	208/1/60	0.02	0.02	0.24/15	28.9	22-7/16x22-7/16	8-3/16	TRANE	TPLFYP005FM140B	1,2,3,4,5,6,7,8
AC 1-05	2001	OFFICE	CEILING-CASSETTE (FOUR WAY)	335	2,400	870	11,155.9	10,625.0	R410A	A1	208/1/60	0.02	0.02	0.29/15	31.3	22-7/16x22-7/16	8-3/16	TRANE	TPLFYP012FM140B	1,2,3,4,5,6,7,8
AC 1-06	2010	BREAK ROOM	CEILING-CASSETTE (FOUR WAY)	297	9,720	2,440	11,155.9	10,625.0	R410A	A1	208/1/60	0.04	0.03	0.24/15	31.3	22-7/16x22-7/16	8-3/16	TRANE	TPLFYP012FM140B	1,2,3,4,5,6,7,8
AC 1-07	2010	BREAK ROOM	CEILING-CASSETTE (FOUR WAY)	297	9,720	2,440	11,155.9	10,625.0	R410A	A1	208/1/60	0.04	0.03	0.24/15	31.3	22-7/16x22-7/16	8-3/16	TRANE	TPLFYP012FM140B	1,2,3,4,5,6,7,8
AC 1-08	2018	CORRIDOR	CEILING-CASSETTE (FOUR WAY)	280	2,280	1,570	4,648.3	4,407.4	R410A	A1	208/1/60	0.02	0.02	0.24/15	28.9	22-7/16x22-7/16	8-3/16	TRANE	TPLFYP005FM140B	1,2,3,4,5,6,7,8
AC 1-09	2011	THEATER	CEILING-CASSETTE (ONE WAY)	328	11,160	4,490	11,155.9	10,625.0	R410A	A1	208/1/60	0.02	0.02	0.29/15	31.3	31-31/32x15-9/16	9-1/16	TRANE	TPMFYP012BM140F	1,2,3,4,5,6,7,8,9
AC 1-10	2011	THEATER	CEILING-CASSETTE (ONE WAY)	328	11,160	4,490	11,155.9	10,625.0	R410A	A1	208/1/60	0.02	0.02	0.29/15	31.3	31-31/32x15-9/16	9-1/16	TRANE	TPMFYP012BM140F	1,2,3,4,5,6,7,8,9
AC 1-11	2000	ENTRANCE LOBBY	CEILING-CASSETTE (ONE WAY)	328	8,040	3,140	11,155.9	10,625.0	R410A	A1	208/1/60	0.02	0.02	0.29/15	31.3	31-31/32x15-9/16	9-1/16	TRANE	TPMFYP012BM140F	1,2,3,4,5,6,7,8,9
AC 1-12	2008	EDUCATIONAL EXHIBIT	CEILING-CASSETTE (ONE WAY)	328	7,800	3,017	11,155.9	10,625.0	R410A	A1	208/1/60	0.02	0.02	0.29/15	31.3	31-31/32x15-9/16	9-1/16	TRANE	TPMFYP012BM140F	1,2,3,4,5,6,7,8,9
AC 1-13	2008	EDUCATIONAL EXHIBIT	CEILING-CASSETTE (ONE WAY)	328	7,800	3,017	11,155.9	10,625.0	R410A	A1	208/1/60	0.02	0.02	0.29/15	31.3	31-31/32x15-9/16	9-1/16	TRANE	TPMFYP012BM140F	1,2,3,4,5,6,7,8,9
AC 1-14	2008	EDUCATIONAL EXHIBIT	CEILING-CASSETTE (ONE WAY)	328	7,800	3,017	11,155.9	10,625.0	R410A	A1	208/1/60	0.02	0.02	0.29/15	31.3	31-31/32x15-9/16	9-1/16	TRANE	TPMFYP012BM140F	1,2,3,4,5,6,7,8,9
AC 2-01	C200	CORRIDOR	CEILING-CASSETTE (FOUR WAY)	280	2,280	1,570	4,516.1	4,275.9	R410A	A1	208/1/60	0.02	0.02	0.24/15	28.9	22-7/16x22-7/16	8-3/16	TRANE	TPLFYP005FM140B	1,2,3,4,5,6,7,8
AC 2-02	210	OFFICE	CEILING-CASSETTE (FOUR WAY)	280	3,000	1,150	4,516.1	4,275.9	R410A	A1	208/1/60	0.02	0.02	0.24/15	28.9	22-7/16x22-7/16	8-3/16	TRANE	TPLFYP005FM140B	1,2,3,4,5,6,7,8
AC 2-03	209	OFFICE	CEILING-CASSETTE (FOUR WAY)	280	2,760	1,140	4,516.1	4,275.9	R410A	A1	208/1/60	0.02	0.02	0.24/15	28.9	22-7/16x22-7/16	8-3/16	TRANE	TPLFYP005FM140B	1,2,3,4,5,6,7,8
AC 2-04	208	OFFICE	CEILING-CASSETTE (FOUR WAY)	280	2,880	1,200	4,516.1	4,275.9	R410A	A1	208/1/60	0.02	0.02	0.24/15	28.9	22-7/16x22-7/16	8-3/16	TRANE	TPLFYP005FM140B	1,2,3,4,5,6,7,8
AC 2-05	207	OFFICE	CEILING-CASSETTE (FOUR WAY)	335	6,600	3,440	10,838.7	10,308.0	R410A	A1	208/1/60	0.02	0.02	0.24/15	31.3	22-7/16x22-7/16	8-3/16	TRANE	TPLFYP012FM140B	1,2,3,4,5,6,7,8
AC 2-06	215	KITCHENETTE	CEILING-CASSETTE (FOUR WAY)	280	11,640	430	4,516.1	4,275.9	R410A	A1	208/1/60	0.02	0.02	0.24/15	28.9	22-7/16x22-7/16	8-3/16	TRANE	TPLFYP005FM140B	1,2,3,4,5,6,7,8
AC 2-07	201	KITCHENETTE	CEILING-CASSETTE (FOUR WAY)	280	8,520	2,720	4,516.1	4,275.9	R410A	A1	208/1/60	0.02	0.02	0.24/15	28.9	22-7/16x22-7/16	8-3/16	TRANE	TPLFYP005FM140B	1,2,3,4,5,6,7,8
AC 2-08	201	OPEN OFFICE	CEILING-CASSETTE (FOUR WAY)	280	8,520	2,720	4,516.1	4,275.9	R410A	A1	208/1/60	0.02	0.02	0.24/15	28.9	22-7/16x22-7/16	8-3/16	TRANE	TPLFYP005FM140B	1,2,3,4,5,6,7,8
AC 2-09	201	OPEN OFFICE	CEILING-CASSETTE (FOUR WAY)	280	8,520	2,720	4,516.1	4,275.9	R410A	A1	208/1/60	0.02	0.02	0.24/15	28.9	22-7/16x22-7/16	8-3/16	TRANE	TPLFYP005FM140B	1,2,3,4,5,6,7,8
AC 2-10	201	OPEN OFFICE	CEILING-CASSETTE (FOUR WAY)	280	8,520	2,720	4,516.1	4,275.9	R410A	A1	208/1/60	0.02	0.02	0.24/15	28.9	22-7/16x22-7/16	8-3/16	TRANE	TPLFYP005FM140B	1,2,3,4,5,6,7,8
AC 2-11	205	OFFICE	CEILING-CASSETTE (FOUR WAY)	335	5,640	2,480	10,838.7	10,308.0	R410A	A1	208/1/60	0.02	0.02	0.29/15	31.3	22-7/16x22-7/16	8-3/16	TRANE	TPLFYP012FM140B	1,2,3,4,5,6,7,8
AC 2-12	204	OFFICE	CEILING-CASSETTE (FOUR WAY)	280	3,360	1,820	4,516.1	4,275.9	R410A	A1	208/1/60	0.02	0.02	0.24/15	28.9	22-7/16x22-7/16	8-3/16	TRANE	TPLFYP005FM140B	1,2,3,4,5,6,7,8
AC 2-13	203	OFFICE	CEILING-CASSETTE (FOUR WAY)	280	2,160	1,060	4,516.1	4,275.9	R410A	A1	208/1/60	0.02	0.02	0.24/15	28.9	22-7/16x22-7/16	8-3/16	TRANE	TPLFYP005FM140B	1,2,3,4,5,6,7,8
AC 2-14	202	OFFICE	CEILING-CASSETTE (FOUR WAY)	280	2,160	1,180	4,516.1	4,275.9	R410A	A1	208/1/60	0.02	0.02	0.24/15	28.9	22-7/16x22-7/16	8-3/16	TRANE	TPLFYP005FM140B	1,2,3,4,5,6,7,8
AC 2-15	200	RECEPTION	CEILING-CASSETTE (FOUR WAY)	315	3,240	2,300	7,225.8	6,872.0	R410A	A1	208/1/60	0.02	0.02	0.28/15	31.3	22-7/16x22-7/16	8-3/16	TRANE	TPLFYP008FM140B	1,2,3,4,5,6,7,8
AC 2-16	214	CONFERENCE ROOM	CEILING-CASSETTE (FOUR WAY)	460	6,360	3,400	16,258.1	15,271.1	R410A	A1	208/1/60	0.04	0.04	0.5/15	31.1	22-7/16x22-7/16	8-3/16	TRANE	TPLFYP018FM140B	1,2,3,4,5,6,7,8

INDOOR VRF UNIT SCHEDULE NOTES:

1. NOMINAL COOLING CAPACITIES ARE BASED ON INDOOR COIL EAT OF 80/67°F (DB/WB), OUTDOOR OF 95°F (DB)
2. NOMINAL HEATING CAPACITIES ARE BASED ON INDOOR COIL EAT OF 70°F (DB), OUTDOOR OF 43°F (WB)SEE OUTDOOR UNIT SCHEDULE FOR OUTDOOR AMBIENT CONDITIONS, CONNECTED CAPACITY, AND OTHER FACTORS ASSOCIATED WITH CORRECTED CAPACITIES
3. CONTRACTOR RESPONSIBLE TO FIELD VERIFY ALL PIPE LENGTHS AND COORDINATE AS-BUILT CONDITION WITH MANUFACTURER TO OBTAIN ALL LOAD CAPACITIES.
4. SEE SCHEMATIC PIPING/CONTROL DIAGRAM FOR INDICATION OF REQUIRED INDOOR UNIT REMOTE CONTROLLERS, SYSTEM CONTROLLERS, AND INTEGRATION DEVICES.
5. PROVIDE CN-24 RELAY KITS FOR ALL INDOOR UNITS FOR INTEGRATION WITH BACK-UP HEAT.
6. PROVIDE TE-200A CENTRALIZED CONTROLLER AND REQUIRED LICENSES OF TRACER SC+ FOR ASSOCIATED CONTROLS.
7. LOCAL CONTROLLERS ARE "SIMPLE" TYPE. LOCAL CONTROLLERS CAN BE MINIMIZED BY PAIRING INDOOR UNITS IN THE SAME ROOM TOGETHER ON A SINGLE LOCAL CONTROLLER, IF DESIRED.
8. FULL DEMAND CORRECTED CAPACITY INCLUDES DE-RATE ASSOCIATED WITH INDOOR VS. OUTDOOR CONNECTED CAPACITY INDICATED ON OUTDOOR UNIT SCHEDULE FOR ASSOCIATED SYSTEM. PARTIAL CORRECTED CAPACITY ASSUMES SUFFICIENT DIVERSITY EXISTS SUCH THAT THE CONNECTED CAPACITY DE-RATE DOES NOT APPLY.
9. REFER TO SPECIFICATION SECTION 238129 FOR ADDITIONAL INFORMATION.

OUTDOOR VRF UNIT SCHEDULE

UNIT TAG	LOCATION	MODULE	TOTAL SUPPLY AIRFLOW (CFM)	COOLING EFFICIENCY (EER/SEER)	CAPACITY (BTU/H)		REFRIGERANT	REFR. SAFTEY CLASS	V/PH/HZ	MCA	MOP	UNIT WEIGHT LBS	UNIT DIMENSIONS (LxWxH, IN)	BASIS OF DESIGN		NOTES
					COOLING	HEATING								MFGR	MODEL	
ACCU-1	ROOF	EP120	8300	22.35/10.5	123,645.0	117,661.7	R410A	A1	208/3/60	56	90	622	48-7/8 x 29-3/16 x 71-5/8	TRANE	TURYE1203AN41AN	1, 2, 3, 4, 5
ACCU-2	ROOF	EP96	7400	23.35/11.85	99,354.8	94,070.1	R410A	A1	208/3/60	44	70	613	48-7/8 x 29-3/16 x 71-5/8	TRANE	TURYE0963AN41AN	1, 2, 3, 4, 5

OUTDOOR VRF UNIT SCHEDULE NOTES:

1. NOMINAL COOLING CAPACITIES ARE BASED ON INDOOR COIL EAT OF 80/67°F (DB/WB), OUTDOOR OF 95°F (DB)
2. NOMINAL HEATING CAPACITIES ARE BASED ON INDOOR COIL EAT OF 70°F (DB), OUTDOOR OF 43°F (WB)
3. EFFICIENCY VALUES FOR EER, IEER, COP ARE BASED ON AHRI 1230 TEST METHOD FOR MIXTURE OF DUCTED & NON-DUCTED INDOOR UNITS.
4. FOR SYSTEMS WITH MULTIPLE MODULES, REFRIGERANT PIPE DIMENSIONS INDICATE TOTAL SYSTEM COMBINED PIPING DOWNSTREAM OF MODULE TWINNING.
5. ADDED FIELD CHARGE LISTED IS IN ADDITION TO FACTORY CHARGE, THIS MUST BE UPDATED BASED UPON FINAL AS-BUILT PIPING LAYOUT.
6. FACTORY REPRESENTATIVES SHALL REVIEW THE PROJECT PRIOR TO AND THROUGHOUT THE INSTALLATION OF CITY MULTI EQUIPMENT.
7. FACTORY REPRESENTATIVES SHALL STARTUP AND COMMISSION CITY MULTI EQUIPMENT UPON COMPLETION OF EQUIPMENT INSTALLATIONS.
8. FACTORY REPRESENTATIVES SHALL PROVIDE ON-SITE ASSISTANCE FOR THE BMS INTEGRATION OF THE CITY MULTI EQUIPMENT. SEE DRAWING M401 AND M402 FOR ADDITIONAL INFORMATION.
9. FACTORY REPRESENTATIVES SHALL PROVIDE END-USER TRAINING ON THE CITY MULTI EQUIPMENT UPON COMPLETION OF THE INSTALLATION OF EQUIPMENT.
10. REFER TO SPECIFICATION SECTION 238129 FOR ADDITIONAL INFORMATION.

VRF HEAT RECOVERY BRANCH CIRCUIT CONTROLLER

UNIT TAG	LOCATION	TOTAL SUPPLY AIR, CFM	REFRIGERANT	TYPE	NUMBER OF PORTS	CONNECTED CAPACITY TO BC	VOLTAGE/PHASE/HZ	MCA	MODEL #	NOTES
BC-1	FIRST FLOOR	8300	R410A	SINGLE	16	133,000.0	208/3/60	1.47	TCMBG1016SJ11N4	1
BC-2	SECOND FLOOR	7400	R410A	SINGLE	16	110,000.0	208/3/60	1.57	TCMBM1016JA11N4	1

VRF HEAT RECOVERY BRANCH CIRCUIT CONTROLLER SCHEDULE NOTES:

1. INCLUDE DIAMONDBACK BALL VALVES BV-SERIES, 700PSIG WORKING PRESSURE, FULL PORT, 410A RATED.
2. REFER TO SPECIFICATION SECTION 238129 FOR ADDITIONAL INFORMATION.

No.	Date	Revisions
0	02-18-25	RFP SET

Drawn by WM/AW
Checked by PC/ERF
Project No. 40034G
Scale AS SHOWN
Date 02/18/2025

GREENMAN PEDERSEN, INC
2 EXECUTIVE BOULEVARD
SUFFERN, NY 10901

Mechanical, Electrical & Structural Engineer:

ATZL, NASHER, & ZIGLER
234 North Main Street
New City, NY 10956

Civil Engineer:

RENOVATION OF ROCKLAND GREEN ADMINISTRATIVE HEADQUARTERS AND CONSTRUCTION OF AN IMMERSIVE THEATRE EXPERIENCE

TOWN OF CLARKSTOWN
COUNTY OF ROCKLAND

172 MAIN STREET
NANUET, NY 10954

MICHAEL SHILALE ARCHITECTS, L.L.P.
140 Park Avenue New City, NY 10956 Tel 845-708-9200
www.shilale.com

© COPYRIGHT, MICHAEL SHILALE ARCHITECTS, ALL RIGHTS RESERVED.

Drawing Title
MECHANICAL SCHEDULES - 2

Drawing No.
M003

EXHAUST FAN SCHEDULE

UNIT #	SERVICE ROOMS	LOCATION	DRIVE	AIRFLOW (CFM)	ESP (IN WC)	FAN RPM	WATTS	ELECTRICAL			UNIT WEIGHT (LBS)	BASIS OF DESIGN		ACCESSORIES	REMARKS
								MOTOR HP	V/PH/HZ	FLA		MFR.	MODEL #		
TX-1	2005	CLG.	DIRECT	100	0.25	691	26	1/28	115/1/60	1.0	28	PENNBARRY	ZEPHYR ZRB6-CT140	BS,BD,SI,SFC	SEE NOTES
TX-2	2009	CLG.	DIRECT	100	0.25	691	26	1/28	115/1/60	1.0	28	PENNBARRY	ZEPHYR ZRB6-CT140	BS,BD,SI,SFC	SEE NOTES
TX-3	2013	CLG.	DIRECT	100	0.25	691	26	1/28	115/1/60	1.0	28	PENNBARRY	ZEPHYR ZRB6-CT140	BS,BD,SI,SFC	SEE NOTES
TX-4	2014	CLG.	DIRECT	100	0.25	691	26	1/28	115/1/60	1.0	28	PENNBARRY	ZEPHYR ZRB6-CT140	BS,BD,SI,SFC	SEE NOTES
TX-5	206A	CLG.	DIRECT	200	.125	691	26	1/28	115/1/60	1.0	28	PENNBARRY	ZEPHYR ZRB6-CT210	BS,BD,SI,SFC	SEE NOTES
TX-6	206B	CLG.	DIRECT	200	.125	691	26	1/28	115/1/60	1.0	28	PENNBARRY	ZEPHYR ZRB6-CT210	BS,BD,SI,SFC	SEE NOTES
TX-7	212	CLG.	DIRECT	100	0.25	691	26	1/28	115/1/60	1.0	28	PENNBARRY	ZEPHYR ZRB6-CT140	BS,BD,SI,SFC	SEE NOTES
TX-8	213	CLG.	DIRECT	100	0.25	691	26	1/28	115/1/60	1.0	28	PENNBARRY	ZEPHYR ZRB6-CT140	BS,BD,SI,SFC	SEE NOTES

* BS-BIRDSCREEN; BD-BACKDRAFT DAMPER; SI-INLET SCREEN; SFC-SOLID-STATE FAN SPEED CONTROL.

EXHAUST FAN SCHEDULE NOTES:

1. PROVIDE REQUIRED CEILING MOUNTING SUPPORTS & FRAMES, BRACKET HARDWARE, VIBRATION ISOLATORS, SQUARE TO ROUND TRANSITION, BACKDRAFT DAMPER & SPEED CONTROLLER MOUNTED IN CASING. SELECT DIRECT DRIVE, ECM TYPE MOTOR. PROVIDE WALL MOUNTED HUMIDITY SENSORS AND MOTION SENSOR CONTROLS.
2. STYLE AND COLOR OF GRILLE FOR UNIT TO BE APPROVED AND SELECTED BY ARCHITECT/ENGINEER AND OWNER PRIOR TO RELEASE.
3. PROVIDE FIELD CONVERSION KIT, UNIT SHALL BE TOP DISCHARGE FOR INTERCONNECTION TO EXISTING EXHAUST DUCTWORK.
4. UNIT SHALL BE INTERLOCKED WITH LIGHT SWITCH. AFTER OCCUPANTS LEAVE SPACE, FAN SHALL OPERATE FOR DESIRED TIME(20 MIN. - ADJUSTABLE) TO ENSURE ALL ODOR IS ELIMINATED AND HUMIDITY SET POINTS ARE MET.
5. OR APPROVED EQUAL.

CABINET UNIT HEATER SCHEDULE

TAG	SERVICE	COIL	CONFIGURATION	HEATING COIL CAPACITY				ELECTRICAL		UNIT DIMENSIONS (DxLxH, IN)	BASIS OF DESIGN		REMARKS
				KW	BTU/H	CFM	FINAL AIR TEMP	V/PH/HZ	AMPS		MAKE	MODEL	
CUH-1	STAIRWELL	ELECTRIC	FLOOR MOUNTED	5.0	17065.0	250	123°F	208/1/60	25	9.75 x 35 x 26.375	MARLEY	CU935	SEE NOTES

CABINET UNIT HEATER SCHEDULE NOTES:

1. REFER TO SPEC 235413 FOR ADDITIONAL INFORMATION.
2. VERIFY AND CONFIRM FINISH WITH ARCHITECT AND OWNER PRIOR TO RELEASE.

AIR OUTLETS SCHEDULE

TAG	SERVICE	TYPE	FACE SIZE (IN)	NECK SIZE (IN)	MOUNTING	# OF SLOTS	MAX. NOISE CRITERIA (NC)	BASIS OF DESIGN		REMARKS
								MFR.	MODEL #	
SD	SUPPLY	SQUARE PLAQUE DIFFUSER	24x24	SEE PLANS	LAY IN	-	25	NAILOR	UNI TYPE PL	1, 2, 3, 4, 5
SG	SUPPLY	STEEL SUPPLY REGISTER	SEE PLANS	-	DUCT MOUNTED	-	25	NAILOR	61SH	2, 3, 4, 5
R-1	RETURN	STEEL RETURN REGISTER	24x24	-	LAY IN	-	25	NAILOR	6145H	3, 4, 5
R-2	RETURN	STEEL RETURN REGISTER	NK + 1.75"	SEE PLANS	DUCT MOUNTED	-	25	NAILOR	6145H-O	2, 3, 4, 5

AIR OUTLETS SCHEDULE NOTES:

1. NECK SIZES ARE INDICATED ON THE PLANS.
2. PROVIDE OPPOSED BLADE VOLUME DAMPERS FROM MANUFACTURER.
3. COORDINATE FINISH, BORDER TYPE, AND INSTALLATION WITH ARCHITECTURAL PLANS.
4. SEE SPEC 233713 FOR MORE INFO
5. OR APPROVED EQUAL

No.	Date	Revisions
0	02-18-25	RFP SET

Drawn by WM
Checked by PC/ERF
Project No. 40034G
Scale NONE
Date 02/18/2025

Mechanical, Electrical & Structural Engineer: GREENMAN PEDERSEN, INC
2 EXECUTIVE BOULEVARD
SUITE 206
SUFFERN, NY 10901

Civil Engineer: ATZL,NASHER,& ZIGLER
234 North Main Street
New City, NY 10956

RENOVATION OF ROCKLAND GREEN ADMINISTRATIVE HEADQUARTERS AND CONSTRUCTION OF AN IMMERSIVE THEATRE EXPERIENCE

172 MAIN STREET
NANUET, NY 10954

TOWN OF CLARKSTOWN
COUNTY OF ROCKLAND

MICHAEL SHILALE ARCHITECTS, L.L.P.
140 Park Avenue New City, NY 10956 Tel 845-708-9200
www.shilale.com

© COPYRIGHT, MICHAEL SHILALE ARCHITECTS, ALL RIGHTS RESERVED.

Drawing Title
SCHEDULES

Drawing No.
M004

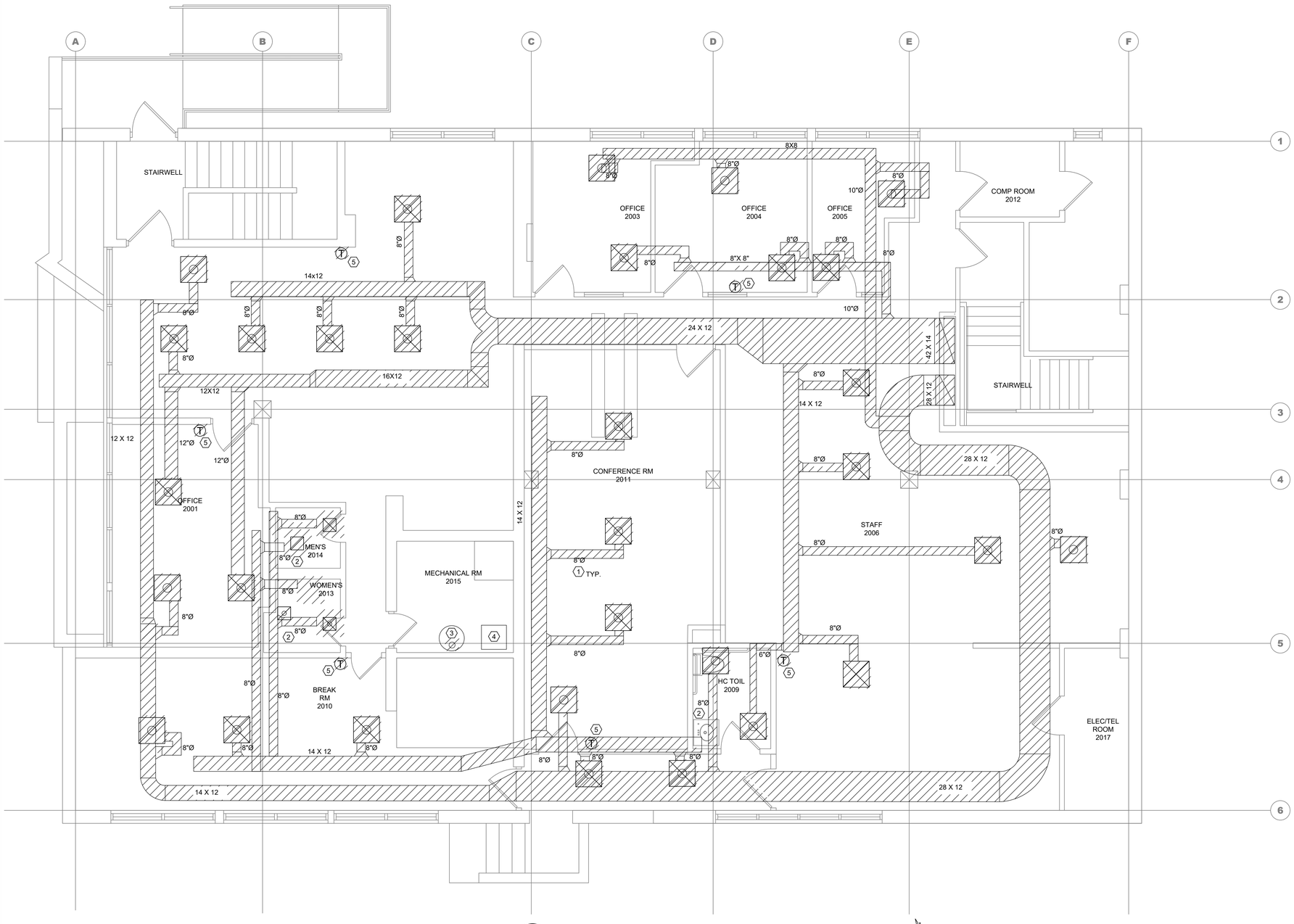

1 MD-101 MECHANICAL FIRST FLOOR PLAN - DEMOLITION

SCALE: 1/4" = 1'-0"

PLAN NORTH

KEYED NOTES:

1. DEMOLISH ALL SUPPLY AND RETURN DUCTWORK, DIFFUSERS, REGISTERS, GRILLES, DAMPERS, TERMINAL UNITS AND ALL SUPPORTS THROUGHOUT.
2. DEMOLISH CEILING TOILET EXHAUST FAN. EXHAUST DUCTWORK TO REMAIN.
3. DISCONNECT EXISTING BREECHING AT DOMESTIC HOT WATER HEATER TO REMAIN. FOR COMPLETE REMOVALS, REFER TO PLUMBING DRAWINGS.
4. EXISTING BOILER TO REMAIN.
5. DEMOLISH THERMOSTATS AND ASSOCIATED CONTROL WIRING FOR ZONE VALVES AND ROOFTOP UNITS IN ITS ENTIRETY.

GENERAL NOTES:

1. SEE HVAC REMOVAL NOTES ON DRAWING M001 FOR ADDITIONAL INFORMATION.
2. COORDINATE REMOVALS OF EQUIPMENT WITH ARCHITECTURAL PLANS.
3. CONTRACTOR RESPONSIBLE TO COORDINATE REMOVAL WORK WITH ALL TRADES AS SHOWN ON ALL PLANS.

0 1/2 1
IF THIS BAR DOES NOT MEASURE 1", THEN DRAWING IS NOT TO FULL SCALE

No.	Date	Revisions
0	02-18-25	RFP SET

Drawn by WM/AW
Checked by PC/ERF
Project No. 40034G
Scale AS SHOWN
Date 02/18/2025

Mechanical, Electrical & Structural Engineer: GREENMAN PEDERSEN, INC
2 EXECUTIVE BOULEVARD
SUITE 202
SUFFERN, NY 10901

Civil Engineer: ATZL, NASHER, & ZIGLER
234 North Main Street
New City, NY 10956

RENOVATION OF ROCKLAND GREEN ADMINISTRATIVE HEADQUARTERS AND CONSTRUCTION OF AN IMMERSIVE THEATRE EXPERIENCE

TOWN OF CLARKSTOWN
COUNTY OF ROCKLAND
178 MAIN STREET
NANUET, NY 10954

MICHAEL SHILALE ARCHITECTS, L.L.P.
140 Park Avenue New City, NY 10956 Tel 845-708-9200
www.shilale.com

© COPYRIGHT, MICHAEL SHILALE ARCHITECTS, ALL RIGHTS RESERVED.

Drawing Title
MECHANICAL FIRST FLOOR PLAN - DEMOLITION

Drawing No.
MD101

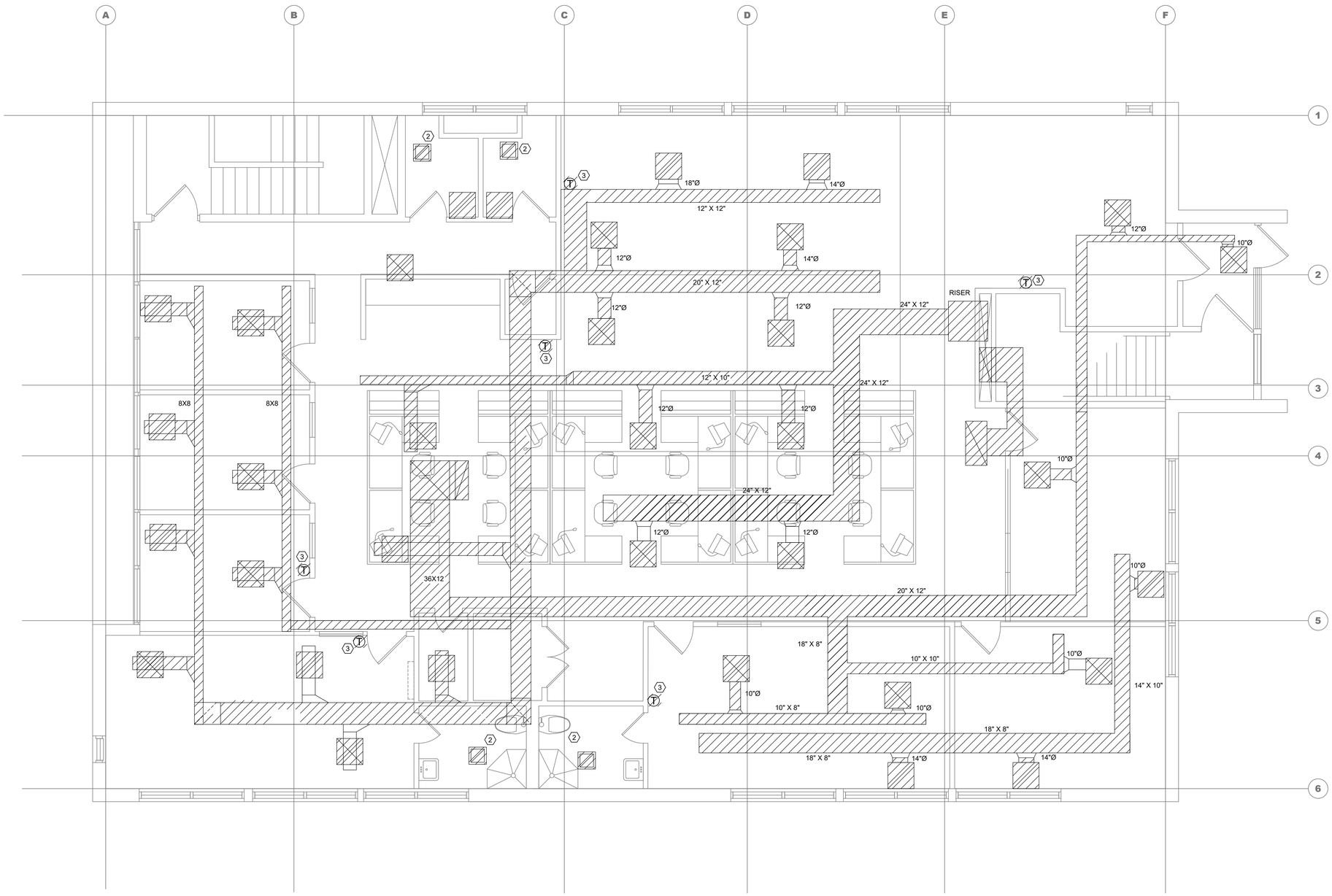

1 MD-102 MECHANICAL SECOND FLOOR PLAN - DEMOLITION

SCALE: 1/4" = 1'-0"

0 4' 8' 16'

PLAN NORTH

KEYED NOTES:

1. DEMOLISH ALL SUPPLY AND RETURN DUCTWORK, DIFFUSERS, REGISTERS, GRILLES, DAMPERS, TERMINAL UNITS AND ALL SUPPORTS THROUGHOUT.
2. DEMOLISH CEILING TOILET EXHAUST FAN. EXHAUST DUCTWORK TO REMAIN FOR REPLACEMENT.
3. DEMOLISH THERMOSTATS AND ASSOCIATED CONTROL WIRING FOR ZONE VALVES AND ROOFTOP UNITS IN ITS ENTIRETY.

0 1/2 1

IF THIS BAR DOES NOT MEASURE 1", THEN DRAWING IS NOT TO FULL SCALE

GENERAL NOTES:

1. SEE HVAC REMOVAL NOTES ON DRAWING M001 FOR ADDITIONAL INFORMATION.
2. COORDINATE REMOVALS OF EQUIPMENT WITH ARCHITECTURAL PLANS.
3. CONTRACTOR RESPONSIBLE TO COORDINATE REMOVAL WORK WITH ALL TRADES AS SHOWN ON ALL PLANS.

No.	Date	Revisions
0	02-18-25	RFP SET

Drawn by WM/AW
Checked by PC/ERF
Project No. 40034G
Scale AS SHOWN
Date 02/18/2025

GREENMAN PEDERSEN, INC
8 EXECUTIVE BOULEVARD
SUFFERN, NY
SUFFERN, NY 10901

Mechanical, Electrical & Structural Engineer:

ATZL, NASHER, & ZIGLER
234 North Main Street
New City, NY 10956

Civil Engineer:

RENOVATION OF ROCKLAND GREEN ADMINISTRATIVE HEADQUARTERS AND CONSTRUCTION OF AN IMMERSIVE THEATRE EXPERIENCE

172 MAIN STREET
NANUET, NY 10954

TOWN OF CLARKSTOWN
COUNTY OF ROCKLAND

MICHAEL SHILALE ARCHITECTS, L.L.P.
140 Park Avenue New City, NY 10956 Tel 845-708-9200
www.shilale.com

© COPYRIGHT, MICHAEL SHILALE ARCHITECTS, ALL RIGHTS RESERVED.

Drawing Title
MECHANICAL SECOND FLOOR PLAN - DEMOLITION

Drawing No.
MD102

GENERAL NOTES:

1. SEE HVAC REMOVAL NOTES ON DRAWING M001 FOR ADDITIONAL INFORMATION.
2. COORDINATE REMOVALS OF EQUIPMENT WITH ARCHITECTURAL PLANS.
3. CONTRACTOR RESPONSIBLE TO COORDINATE REMOVAL WORK WITH ALL TRADES AS SHOWN ON ALL PLANS.

0 1/2 1
IF THIS BAR DOES NOT MEASURE 1", THEN DRAWING IS NOT TO FULL SCALE

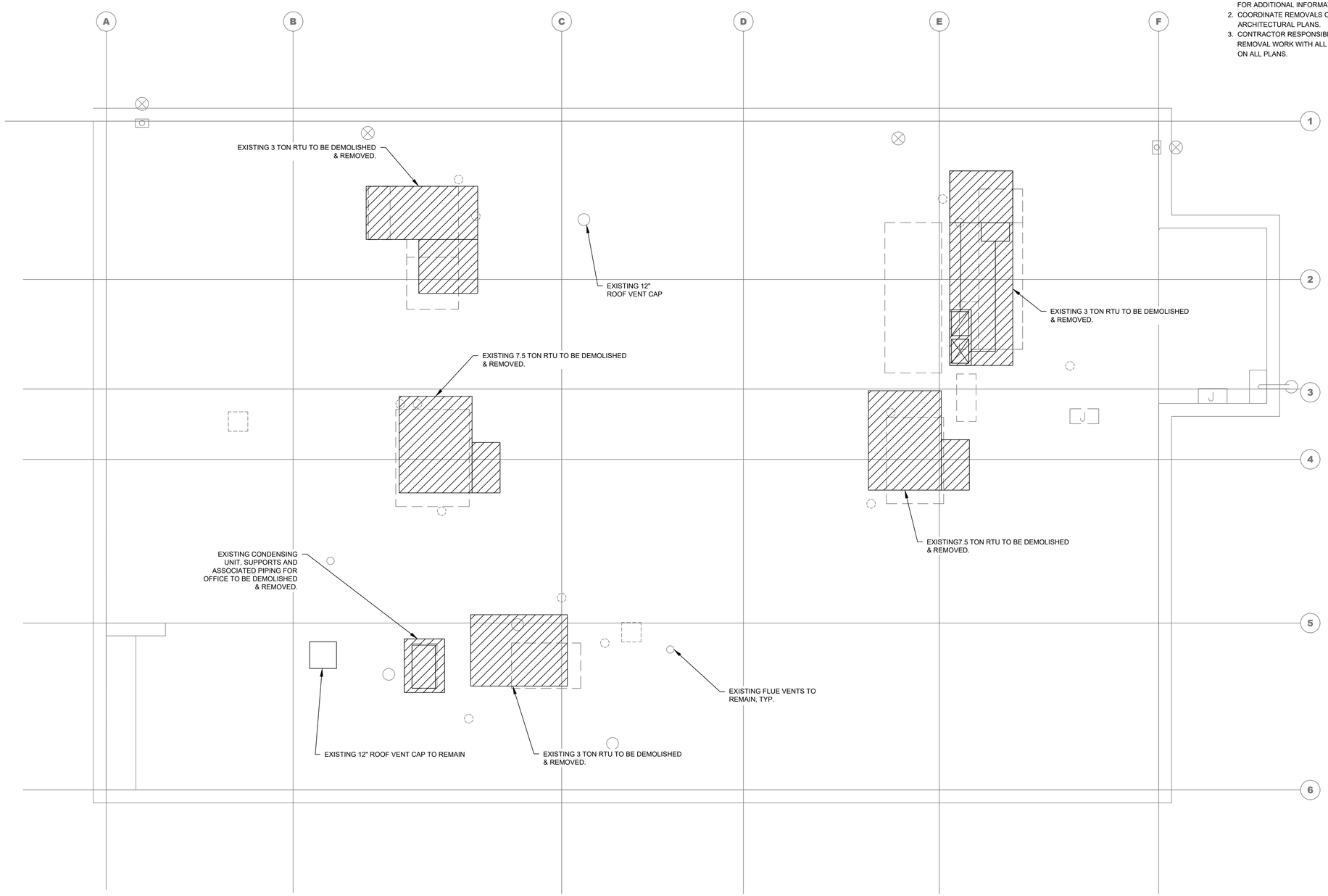

1 / MD-103 MECHANICAL ROOF PLAN - DEMOLITION
SCALE: 1/4" = 1'-0"

PLAN NORTH

No.	Date	Revisions
0	02-18-25	RFP SET

Drawn by WM/AW
Checked by PC/ERF
Project No. 40034G
Scale AS SHOWN
Date 02/18/2025

Mechanical, Electrical & Structural Engineer: GREENMAN PEDERSEN, INC
2 EXECUTIVE BOULEVARD
SUITE 206
SUFFERN, NY 10901

Civil Engineer: ATZL, NASHER, & ZIGLER
234 North Main Street
New City, NY 10956

RENOVATION OF ROCKLAND GREEN ADMINISTRATIVE HEADQUARTERS AND CONSTRUCTION OF AN IMMERSIVE THEATRE EXPERIENCE

172 MAIN STREET
NYACK, NY 10994

TOWN OF CLARKSTOWN
COUNTY OF ROCKLAND

MICHAEL SHILALE ARCHITECTS, L.L.P.
140 Park Avenue New City, NY 10956 Tel 845-709-9200
www.shilale.com

© COPYRIGHT, MICHAEL SHILALE ARCHITECTS, ALL RIGHTS RESERVED.

Drawing Title
MECHANICAL ROOF PLAN - DEMOLITION

Drawing No.
MD103

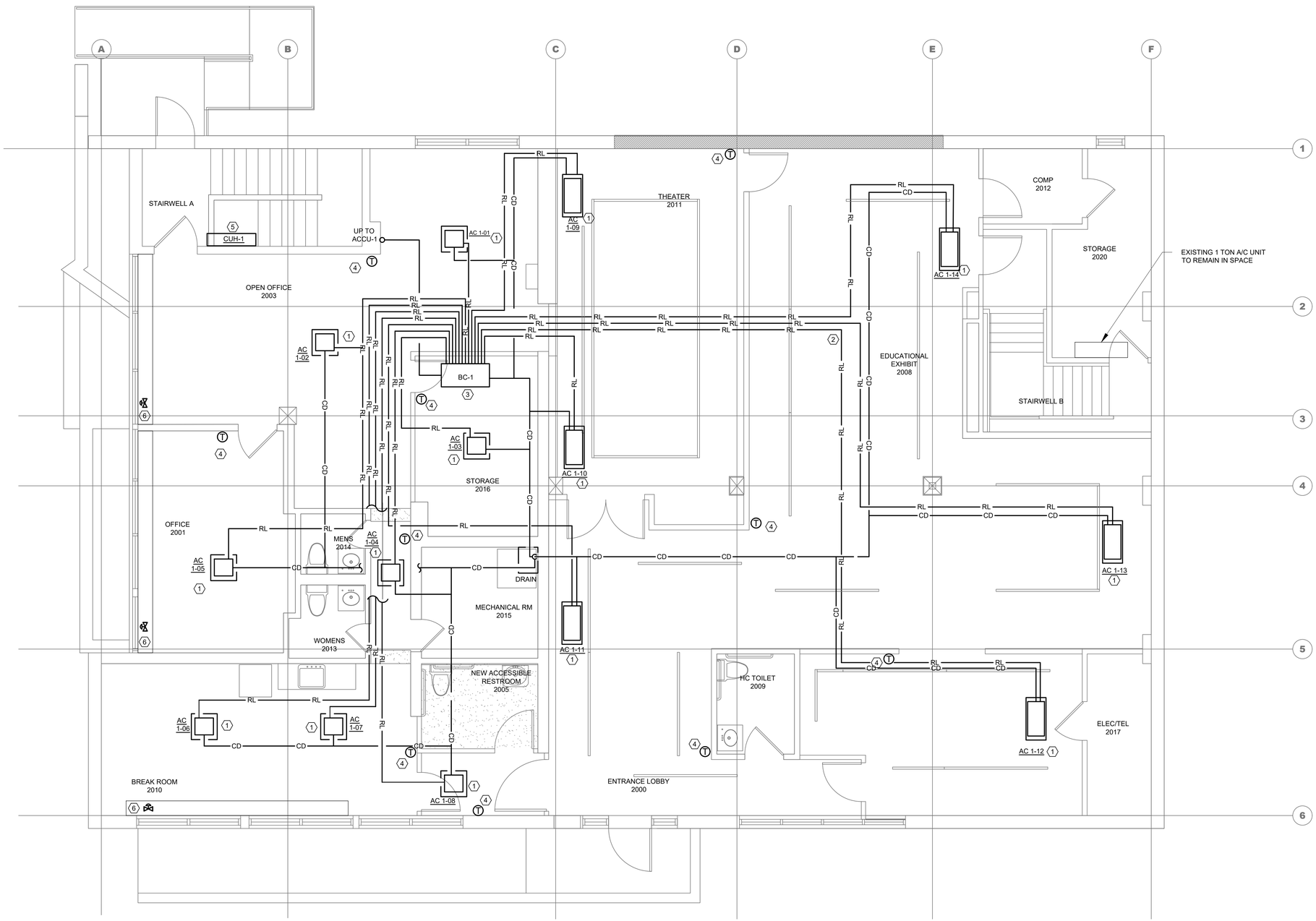

1 M-101 MECHANICAL FIRST FLOOR PIPING

SCALE: 1/4"" = 1'-0"

PLAN NORTH

0 1/2 1

IF THIS BAR DOES NOT MEASURE 1", THEN DRAWING IS NOT TO FULL SCALE

KEYED NOTES:

1. PROVIDE INDOOR VRF CEILING CASSETTE UNIT INCLUDING HANGERS AND SUPPORTS, REFER TO VRF INDOOR UNIT SCHEDULE ON DRAWING M003. REFER TO MANUFACTURER FOR INSTALLATION DETAILS. REFER TO DIVISION 23 SPECIFICATIONS FOR ADDITIONAL INFORMATION.
2. PROVIDE REFRIGERANT LIQUID/SUCTION PIPING, CONDENSATE DRAIN PIPING AND INSULATION FOR EACH INDOOR UNIT INCLUDING HANGERS AND SUPPORTS. SEE MANUFACTURER'S IOM MANUAL AND MECHANICAL DETAILS DRAWINGS FOR ADDITIONAL INFORMATION.
3. PROVIDE BRANCH CONTROLLER BOX, REFER TO MANUFACTURER'S IOM MANUAL FOR ADDITIONAL INFORMATION. SEE DRAWING M003 AND SPECIFICATIONS FOR ADDITIONAL INFORMATION.
4. PROVIDE WALL MOUNTED THERMOSTAT FOR CONTROL OF VRF INDOOR UNIT IN EACH SPACE.
5. PROVIDE CABINET UNIT HEATER, REFER TO CABINET UNIT HEATER SCHEDULE ON DRAWING M004. SEE MECHANICAL DETAILS AND SPECIFICATIONS FOR ADDITIONAL INFORMATION.
6. PROVIDE NEW ZONE VALVE AT EXISTING BASEBOARD HEATER. REFER TO MECHANICAL DETAILS FOR ADDITIONAL INFORMATION. REFER TO SEQUENCE OF OPERATION FOR INTERLOCK OF ZONE VALVE WITH NEW VRF SYSTEM.

GENERAL NOTES:

1. CONTRACTOR TO SUBMIT SHOP DRAWING FOR REVIEW AND APPROVAL PRIOR TO PERFORMING THE WORK.
2. ALL PIPING IS TO BE ROUTED ABOVE CEILING, COORDINATE WORK WITH ALL TRADES.

No.	Date	Revisions
0	02-18-25	RFP SET

Drawn by WM/AW
Checked by PC/ERF
Project No. 400346
Scale AS SHOWN
Date 02/18/2025

Mechanical, Electrical & Structural Engineer:
GREENMAN PEDERSEN, INC
2 EXECUTIVE BOULEVARD
SUITE 202
SUFFERN, NY 10901

Civil Engineer:
ATZL, NASHER, & ZIGLER
234 North Main Street
New City, NY 10956

RENOVATION OF ROCKLAND GREEN ADMINISTRATIVE HEADQUARTERS AND CONSTRUCTION OF AN IMMERSIVE THEATRE EXPERIENCE

TOWN OF CLARKSTOWN
COUNTY OF ROCKLAND

176 MAIN STREET
NYACK, NY 10994

MICHAEL SHILALE ARCHITECTS, L.L.P.
140 Park Avenue New City, NY 10956 Tel 845-708-9200
www.shilale.com

© COPYRIGHT, MICHAEL SHILALE ARCHITECTS, ALL RIGHTS RESERVED.

Drawing Title
MECHANICAL FIRST FLOOR PIPING INSTALLATIONTION

Drawing No.
M101

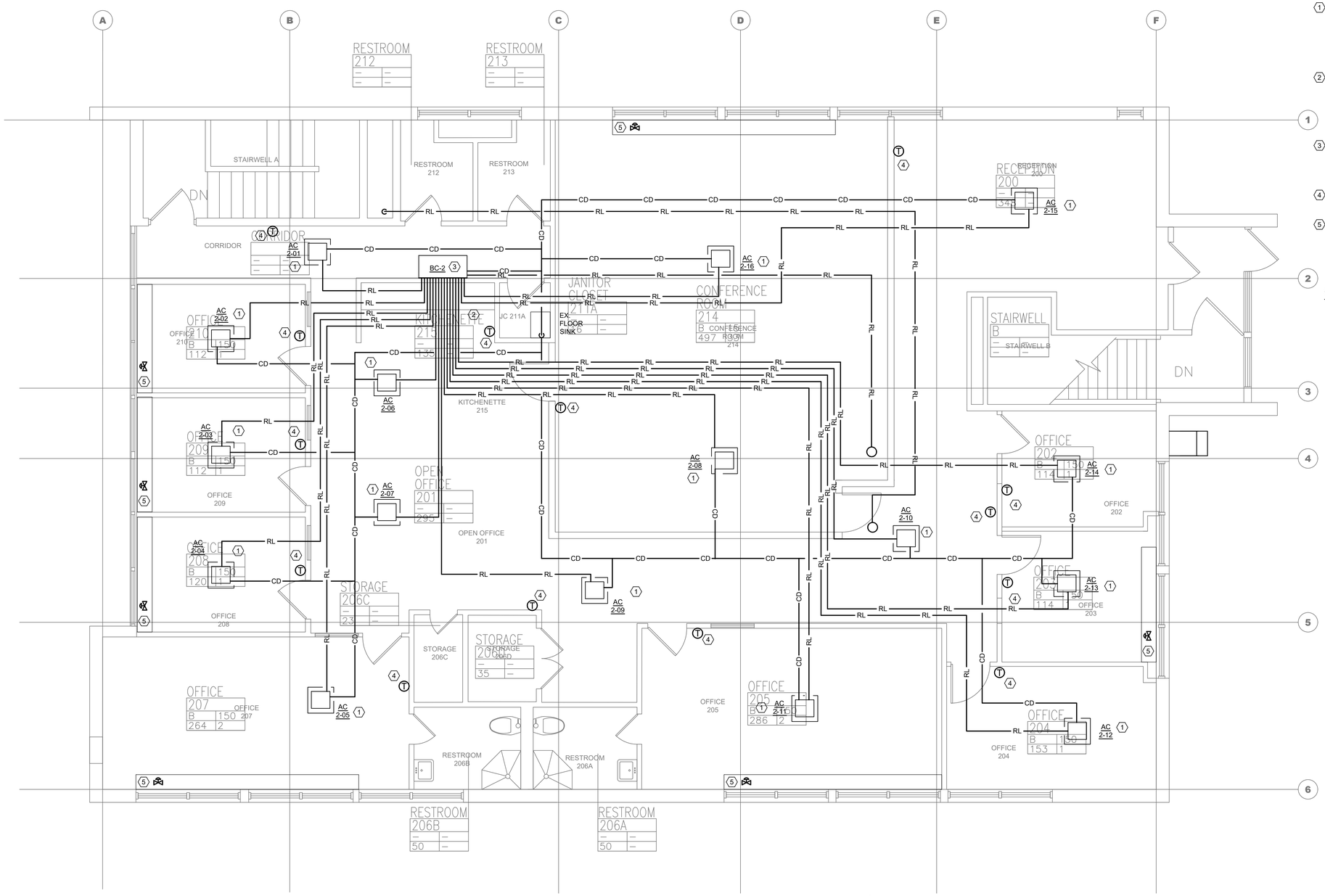

1 M-102 MECHANICAL SECOND FLOOR PLAN - PIPING

SCALE: 1/4" = 1'-0"

PLAN NORTH

KEYED NOTES:

1. PROVIDE INDOOR VRF CEILING CASSETTE UNIT INCLUDING HANGERS AND SUPPORTS, REFER TO VRF INDOOR UNIT SCHEDULE ON DRAWING M003. REFER TO MANUFACTURER FOR INSTALLATION DETAILS. REFER TO DIVISION 23 SPECIFICATIONS FOR ADDITIONAL INFORMATION.
2. PROVIDE REFRIGERANT LIQUID/SUCTION PIPING, CONDENSATE DRAIN PIPING AND INSULATION FOR EACH INDOOR UNIT INCLUDING HANGERS AND SUPPORTS. SEE MANUFACTURER'S IOM MANUAL AND MECHANICAL DETAILS DRAWINGS FOR ADDITIONAL INFORMATION.
3. PROVIDE BRANCH CONTROLLER BOX, REFER TO MANUFACTURER'S IOM MANUAL FOR ADDITIONAL INFORMATION. SEE DRAWING M003 AND SPECIFICATIONS FOR ADDITIONAL INFORMATION.
4. PROVIDE WALL MOUNTED THERMOSTAT FOR CONTROL OF VRF INDOOR UNIT IN EACH SPACE.
5. PROVIDE NEW ZONE VALVE AT EXISTING BASEBOARD HEATER. REFER TO MECHANICAL DETAILS FOR ADDITIONAL INFORMATION. REFER TO SEQUENCE OF OPERATION FOR INTERLOCK OF ZONE VALVE WITH NEW VRF SYSTEM.

GENERAL NOTES:

1. CONTRACTOR TO SUBMIT SHOP DRAWING FOR REVIEW AND APPROVAL PRIOR TO PERFORMING THE WORK.
2. ALL PIPING IS TO BE ROUTED ABOVE CEILING, COORDINATE WORK WITH ALL TRADES.

0 1/2 1
IF THIS BAR DOES NOT MEASURE 1", THEN DRAWING IS NOT TO FULL SCALE

No.	Date	Revisions
0	02-18-25	RFP SET

Drawn by	WM/AW
Checked by	PC/ERF
Project No.	40034G
Scale	AS SHOWN
Date	02/18/2025

Mechanical, Electrical & Structural Engineer: GREENMAN PEDERSEN, INC
2 EXECUTIVE BOULEVARD
SUITE 202
SUFFERN, NY 10901

Civil Engineer: ATZL, NASHER, & ZIGLER
234 North Main Street
New City, NY 10956

RENOVATION OF ROCKLAND GREEN ADMINISTRATIVE HEADQUARTERS AND CONSTRUCTION OF AN IMMERSIVE THEATRE EXPERIENCE

TOWN OF CLARKSTOWN
COUNTY OF ROCKLAND

172 MAIN STREET
NANUET, NY 10954

MICHAEL SHILALE ARCHITECTS, L.L.P.
140 Park Avenue New City, NY 10956 Tel 845-708-9200
www.shilale.com

© COPYRIGHT, MICHAEL SHILALE ARCHITECTS, ALL RIGHTS RESERVED.

Drawing Title
MECHANICAL SECOND FLOOR PIPING INSTALLATION

Drawing No.
M102

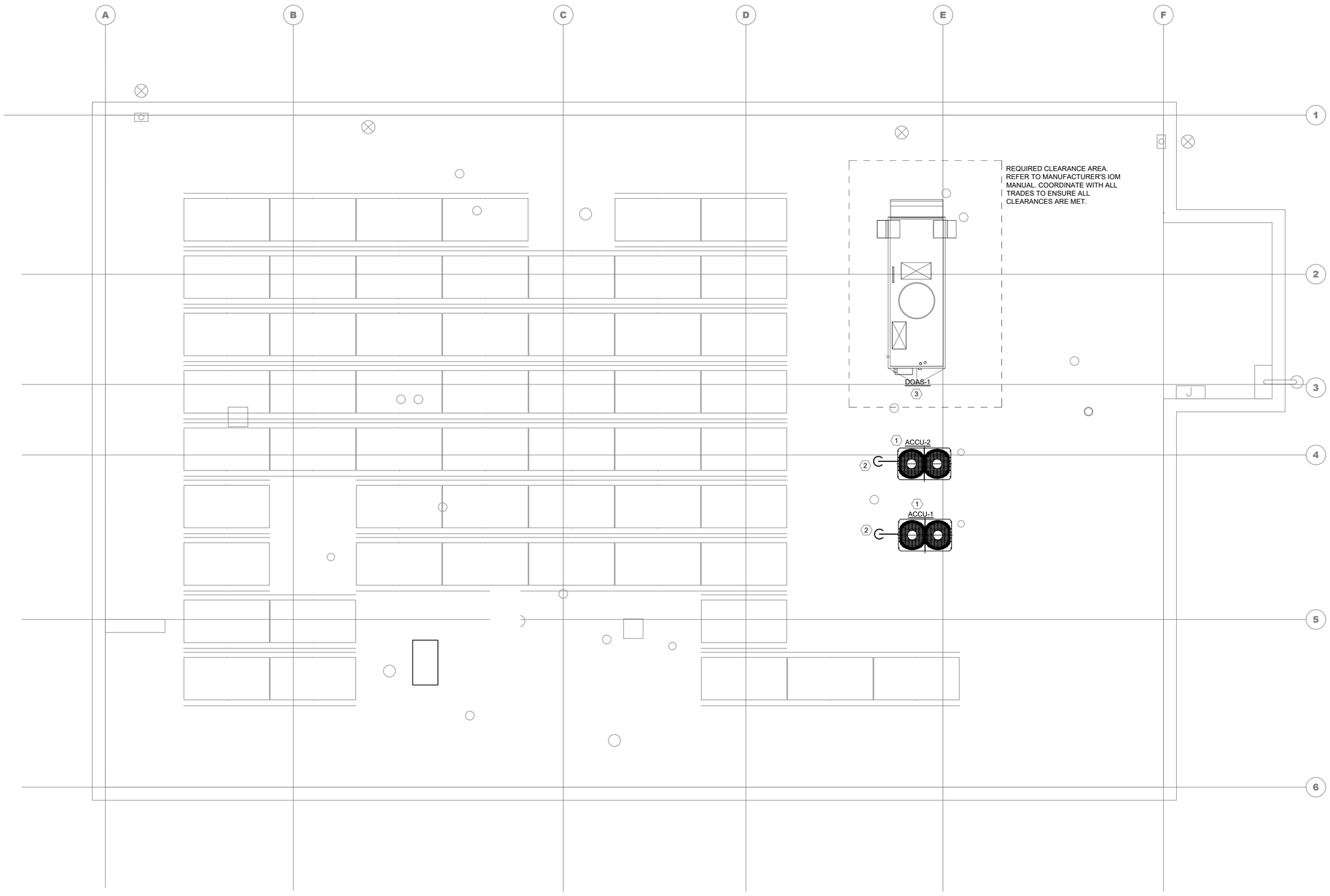

1 / M-103 MECHANICAL ROOF PLAN - HVAC

SCALE: 1/4" = 1'-0"

PLAN NORTH

KEYED NOTES:

1. PROVIDE OUTDOOR VRF CONDENSING UNITS, REFER TO OUTDOOR VRF UNIT SCHEDULE ON DRAWING M003. REFER TO MANUFACTURER FOR INSTALLATION INSTRUCTIONS AND DETAILS ON M501, M503, M503. SUPPORT UNIT ON EQUIPMENT RAILS. REFER TO DIVISION 23 SPECIFICATIONS FOR ADDITIONAL INFORMATION.
2. PROVIDE ALL REQUIRED REFRIGERANT LIQUID/SUCTION PIPING DOWN TO BRANCH CONTROLLER BOX. FOR ROOF PENETRATION DETAILS, SEE DETAILS ON M501, M502 AND M503. REFER TO ARCHITECTURAL PLANS FOR REQUIRED ROOF WORK.
3. PROVIDE ROOFTOP DOAS UNIT ON NEW ROOF CURB, REFER TO DEDICATED OUTDOOR AIR SYSTEM SCHEDULE ON DRAWING M002. REFER TO MANUFACTURER'S IOM MANUAL FOR ADDITIONAL INFORMATION. SEE DETAILS ON M501, M502 AND M503. REFER TO ARCHITECTURAL PLANS FOR ROOF WORK.

0 1/2 1

IF THIS BAR DOES NOT MEASURE 1", THEN DRAWING IS NOT TO FULL SCALE

GENERAL NOTES:

1. CONTRACTOR TO SUBMIT SHOP DRAWING FOR REVIEW AND APPROVAL PRIOR TO PERFORMING THE WORK.
2. COORDINATE WORK WITH ALL TRADES.

No.	Date	Revisions
0	02-18-25	RFP SET

Drawn by WM/AW
Checked by PC/ERF
Project No. 40034G
Scale AS SHOWN
Date 02/18/2025

GREENMAN PEDERSEN, INC
2 EXECUTIVE BOULEVARD
SUITE 202
SUFFERN, NY 10901

Mechanical, Electrical & Structural Engineer:

ATZL, NASHER, & ZIGLER
234 North Main Street
New City, NY 10956

Civil Engineer:

RENOVATION OF ROCKLAND GREEN ADMINISTRATIVE HEADQUARTERS AND CONSTRUCTION OF AN IMMERSIVE THEATRE EXPERIENCE

172 MAIN STREET
NANUET, NY 10954

TOWN OF CLARKSTOWN
COUNTY OF ROCKLAND

MICHAEL SHILALE ARCHITECTS, L.L.P.
140 Park Avenue New City, NY 10956 Tel 845-708-9200
www.shilale.com

© COPYRIGHT, MICHAEL SHILALE ARCHITECTS, ALL RIGHTS RESERVED.

Drawing Title
MECHANICAL ROOF PLAN - INSTALLATION

Drawing No.
M103

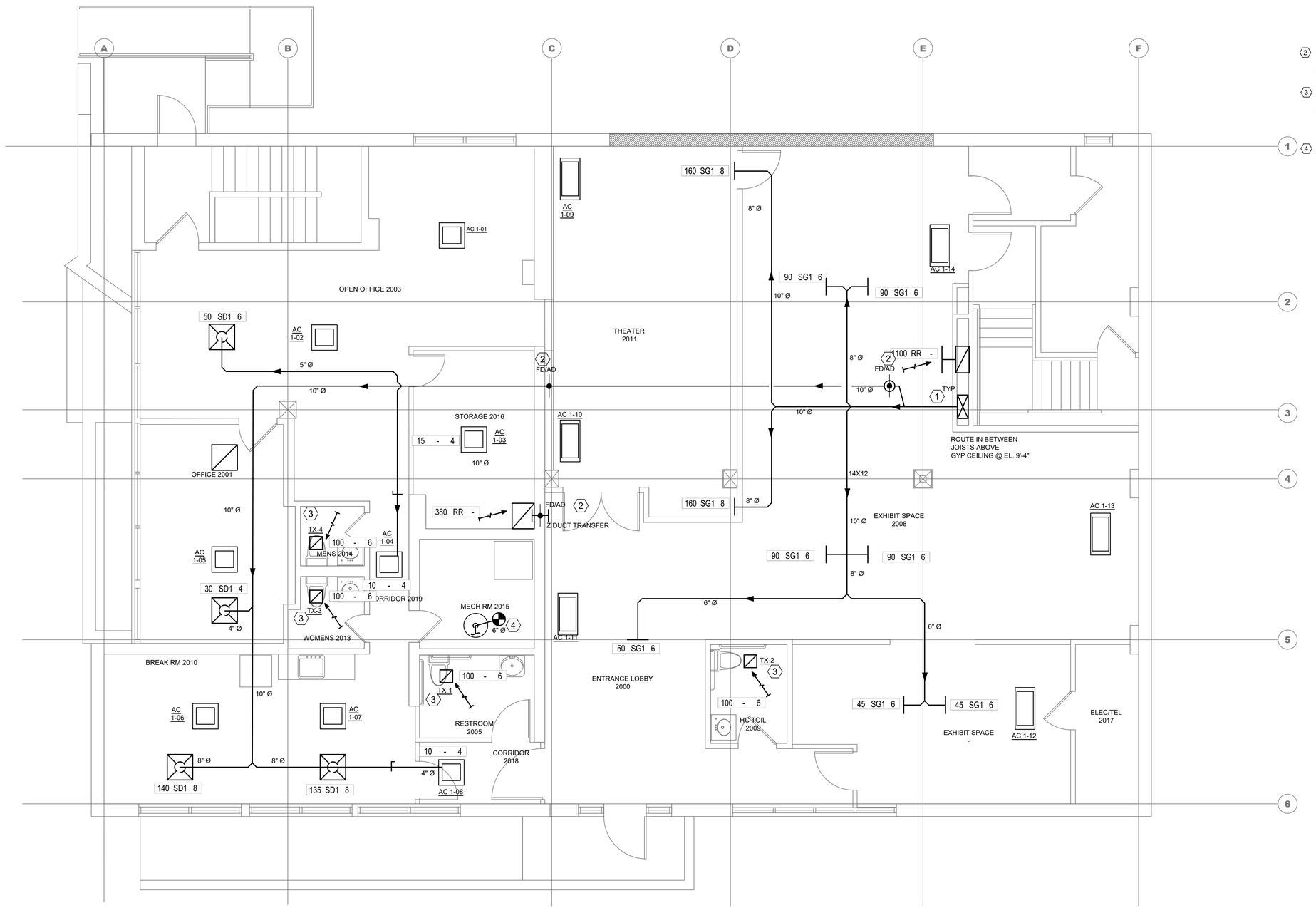

1 M-201 MECHANICAL FIRST FLOOR DUCTWORK

SCALE: 1/4" = 1'-0"

PLAN NORTH

KEYED NOTES:

1. PROVIDE METAL DUCTWORK, INSULATION, HANGERS/SUPPORTS AND AIR INLETS/OUTLETS AS SHOWN. FOR SIZES, SEE FLOOR PLANS AND SCHEDULE ON M004. REFER TO DIVISION 23 SPECIFICATIONS FOR ADDITIONAL INFORMATION.
2. FOR DUCTWORK PENETRATIONS THROUGH FIRE RATED ASSEMBLIES, SEE MECHANICAL DETAILS DRAWINGS.
3. PROVIDE NEW TOILET EXHAUST FAN, SEE FAN SCHEDULE ON M004. CONNECT EXHAUST DUCTWORK TO EXISTING TO VENT UP TO ROOF. REFER TO DIVISION 23 SPECIFICATIONS FOR ADDITIONAL INFORMATION.
4. PROVIDE TYPE B FLUE GAS VENT AND SUPPORTS. CONNECT TO EXISTING 10" Ø TYPE B FLUE FOR GAS FIRED DOMESTIC HOT WATER HEATER, COORDINATE WITH PLUMBING.

0 1/2 1
IF THIS BAR DOES NOT MEASURE 1", THEN DRAWING IS NOT TO FULL SCALE

No.	Date	Revisions
0	02-18-25	RFP SET

Drawn by WM/AW
Checked by PC/ERF
Project No. 40034G
Scale AS SHOWN
Date 02/18/2025

Mechanical, Electrical & Structural Engineer: GREENMAN PEDERSEN, INC
2 EXECUTIVE BOULEVARD
SUFFERN, NY 10901

Civil Engineer: ATZL, NASHER, & ZIGLER
234 North Main Street
New City, NY 10956

RENOVATION OF ROCKLAND GREEN ADMINISTRATIVE HEADQUARTERS AND CONSTRUCTION OF AN IMMERSIVE THEATRE EXPERIENCE

TOWN OF CLARKSTOWN
COUNTY OF ROCKLAND
172 MAIN STREET
NYACK, NY 10994

MICHAEL SHILALE ARCHITECTS, L.L.P.
140 Park Avenue New City, NY 10956 Tel 845-708-9200
www.shilale.com

© COPYRIGHT, MICHAEL SHILALE ARCHITECTS, ALL RIGHTS RESERVED.

Drawing Title
MECHANICAL FIRST FLOOR DUCTWORK INSTALLATION

Drawing No.
M201

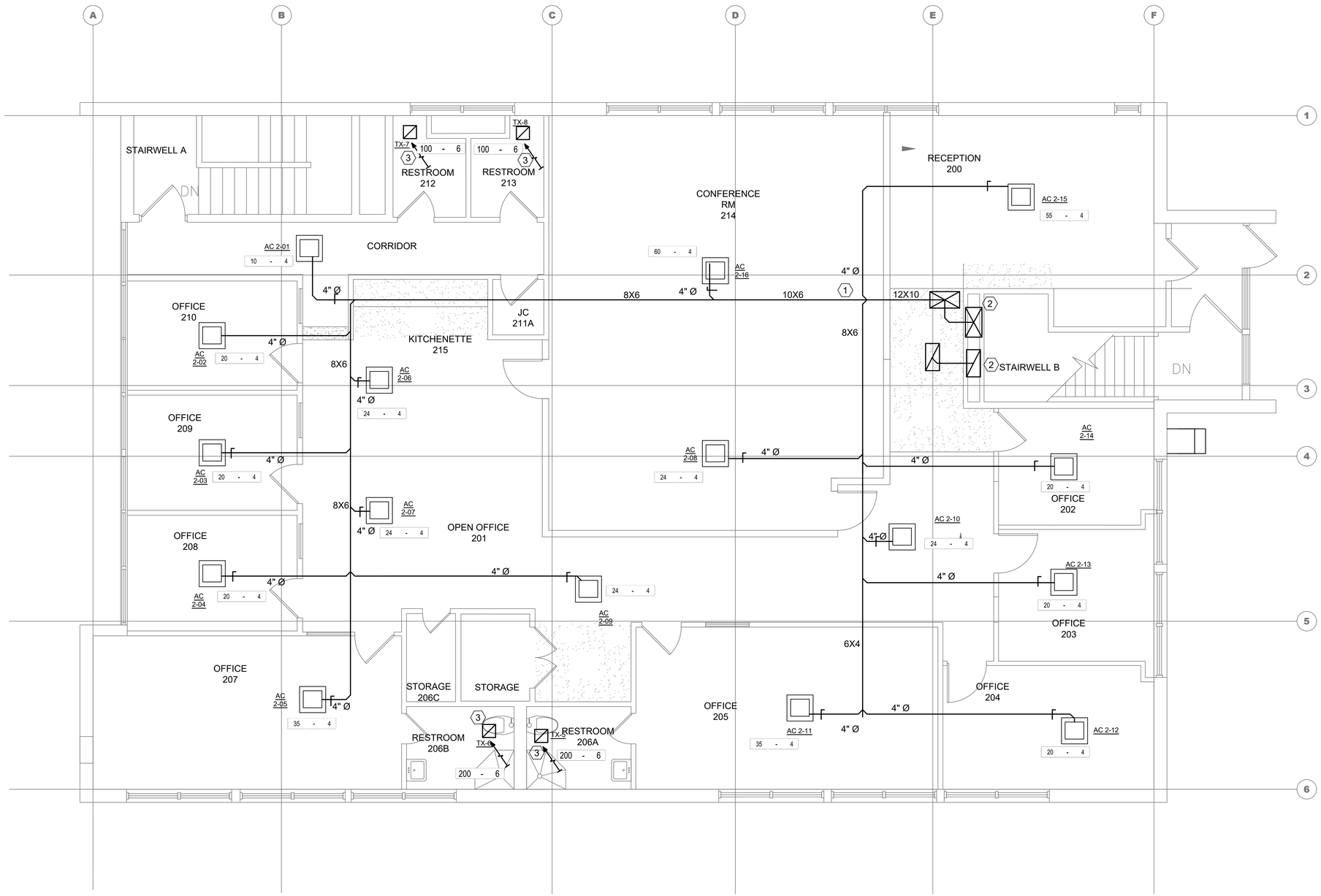

1 M-202 MECHANICAL SECOND FLOOR DUCTWORK

SCALE: 1/4" = 1'-0"

PLAN NORTH

KEYED NOTES:

1. PROVIDE METAL DUCTWORK, INSULATION, HANGERS/SUPPORTS AND AIR INLETS/OUTLETS AS SHOWN. FOR SIZES, SEE FLOOR PLANS AND SCHEDULE ON M004. REFER TO DIVISION 23 SPECIFICATIONS FOR ADDITIONAL INFORMATION.
2. FOR DUCTWORK PENETRATIONS THROUGH FIRE RATED ASSEMBLIES, SEE MECHANICAL DETAILS DRAWINGS.
3. PROVIDE NEW TOILET EXHAUST FAN, SEE FAN SCHEDULE ON M004. CONNECT EXHAUST DUCTWORK TO EXISTING TO VENT UP TO ROOF. REFER TO DIVISION 23 SPECIFICATIONS FOR ADDITIONAL INFORMATION.

0 1/2 1
IF THIS BAR DOES NOT MEASURE 1", THEN DRAWING IS NOT TO FULL SCALE

No.	Date	Revisions
0	02-18-25	RFP SET

Drawn by WM/AW
Checked by PC/ERF
Project No. 40034G
Scale AS SHOWN
Date 02/18/2025

GREENMAN PEDERSEN, INC
2 EXECUTIVE BOULEVARD
SUITE 202
SUFFERN, NY 10901

Mechanical, Electrical & Structural Engineer:

ATZL, NASHER, & ZIGLER
224 North Main Street
New City, NY 10956

Civil Engineer:

RENOVATION OF ROCKLAND GREEN ADMINISTRATIVE HEADQUARTERS AND CONSTRUCTION OF AN IMMERSIVE THEATRE EXPERIENCE

TOWN OF CLARKSTOWN
COUNTY OF ROCKLAND

172 MAIN STREET
NANUET, NY 10954

MICHAEL SHILALE ARCHITECTS, L.L.P.
140 Park Avenue New City, NY 10956 Tel 845-708-9200
www.shilale.com

© COPYRIGHT, MICHAEL SHILALE ARCHITECTS, ALL RIGHTS RESERVED.

Drawing Title
MECHANICAL SECOND FLOOR DUCTWORK INSTALLATION

Drawing No.
M202

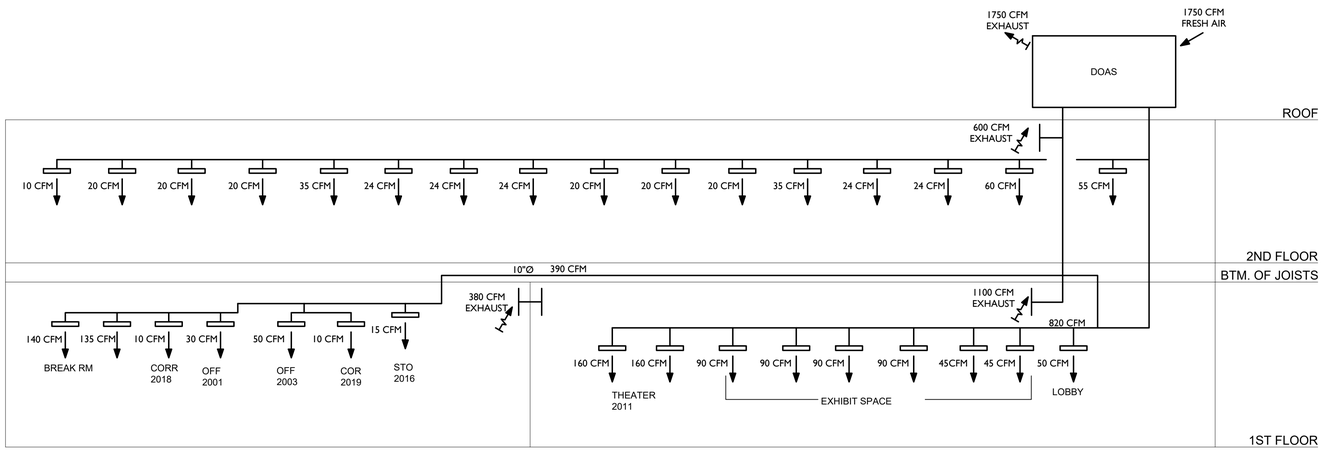

1 M301 VENTILATION RISER DIAGRAM
SCALE: NONE

Mechanical, Electrical & Structural Engineer:	GREENMAN PEDERSEN, INC 2 EXECUTIVE BOULEVARD SUITE 202 SUFFERN, NY 10901
Civil Engineer:	ATZL, NASHER, & ZIGLER 234 North Main Street New City, NY 10956

Drawn by	WM
Checked by	PC
Project No.	40034G
Scale	NONE
Date	02/18/2025

No.	Date	Revisions
0	02-18-25	RFP SET

RENOVATION OF ROCKLAND GREEN ADMINISTRATIVE HEADQUARTERS AND CONSTRUCTION OF AN IMMERSIVE THEATRE EXPERIENCE

TOWN OF CLARKSTOWN
COUNTY of ROCKLAND

172 MAIN STREET
NANUET, NY 10954

MICHAEL SHILALE ARCHITECTS, L.L.P.
140 Park Avenue New City, NY 10956 Tel 845-709-9200
www.shilale.com

© COPYRIGHT, MICHAEL SHILALE ARCHITECTS, ALL RIGHTS RESERVED.

Drawing Title
AIR RISER DIAGRAM

Drawing No.
M301

Design View Piping Diagrams

Quick Results

Connection Summary

Indoor Units:	14 / 1 to 30	
Capacity:	133 / 60 to 180 (110.8%)	
* Connectable capacity is not actual capacity.		
Total Pipe Length:	/ 1968.5	feet
Furthest Actual:	/ 541.0	feet
Furthest Equiv.:	/ 623.0	feet
Furthest IU from BC Actual:	/ 194.3	feet
Furthest IU from BC Equiv.:	/ 194.3	feet
Furthest IU from BC Thru Sub BC Actual:	0.0 / 0.0	feet
Furthest IU from BC Thru Sub BC Equiv.:	0.0 / 0.0	feet

Refrigerant

System Refrigerant: **R410A**
Additional Field-Charge: **25.89 lb**
Total System Charge: **43.52 lb**

Correction Factors

	Cooling	Heating
Outdoor Unit Capacity:	1.03	1.01
Outdoor Temperature:	1.04	0.92
Piping Length:	0.96	0.99
Defrosting:	-	0.95
User Derate:	1.00	1.00
Outdoor Altitude:	1.00	1.00
	1.03	**0.87**

Conditions

Cooling		Heating	
Indoor Dry Bulb	80.0 °F	Indoor Dry Bulb	70.0 °F
Indoor Wet Bulb	67.0 °F		
Indoor Humidity	51.8 %	Outdoor Dry Bulb	9.0 °F
		Outdoor Wet Bulb	7.9 °F
Outdoor Dry Bulb	86.5 °F	Outdoor Humidity	72.0 %

Quick Results

Connection Summary

Indoor Units:	16 / 1 to 24	
Capacity:	110 / 48 to 144 (114.6%)	
* Connectable capacity is not actual capacity.		
Total Pipe Length:	/ 1804.5	feet
Furthest Actual:	/ 541.0	feet
Furthest Equiv.:	/ 623.0	feet
Furthest IU from BC Actual:	/ 195.7	feet
Furthest IU from BC Equiv.:	/ 195.7	feet
Furthest IU from BC Thru Sub BC Actual:	0.0 / 0.0	feet
Furthest IU from BC Thru Sub BC Equiv.:	0.0 / 0.0	feet

Refrigerant

System Refrigerant: **R410A**
Additional Field-Charge: **27.33 lb**
Total System Charge: **44.96 lb**

Correction Factors

	Cooling	Heating
Outdoor Unit Capacity:	1.04	1.01
Outdoor Temperature:	1.03	0.92
Piping Length:	0.97	0.99
Defrosting:	-	0.95
User Derate:	1.00	1.00
Outdoor Altitude:	1.00	1.00
	1.03	**0.87**

Conditions

Cooling		Heating	
Indoor Dry Bulb	80.0 °F	Indoor Dry Bulb	70.0 °F
Indoor Wet Bulb	67.0 °F		
Indoor Humidity	51.8 %	Outdoor Dry Bulb	9.0 °F
		Outdoor Wet Bulb	7.9 °F
Outdoor Dry Bulb	86.5 °F	Outdoor Humidity	72.0 %

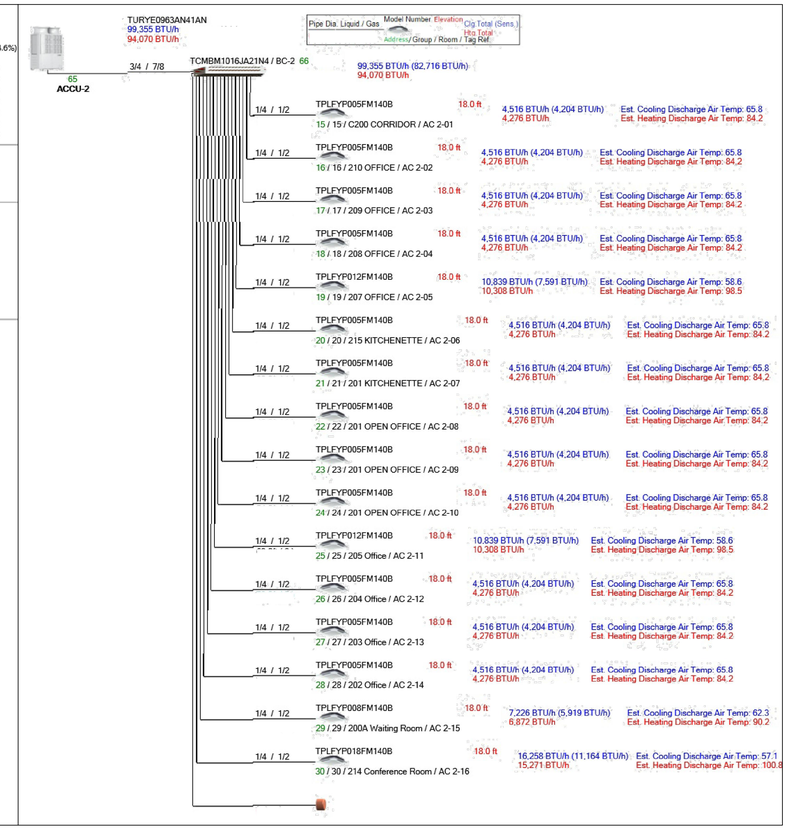

1 / M302 VRF PIPING RISER DIAGRAM
SCALE: NONE

No.	Date	Revisions
0	02-18-25	RFP SET

Drawn by WM
Checked by PC
Project No. 40034G
Scale NONE
Date 02/18/2025

GREENMAN PEDERSEN, INC
2 EXECUTIVE BOULEVARD
SUITE 202
SUFFERN, NY 10901

Mechanical, Electrical & Structural Engineer:

ATZL, NASHER, & ZIGLER
234 North Main Street
New City, NY 10956

Civil Engineer:

RENOVATION OF ROCKLAND GREEN ADMINISTRATIVE HEADQUARTERS AND CONSTRUCTION OF AN IMMERSIVE THEATRE EXPERIENCE

TOWN OF CLARKSTOWN
COUNTY OF ROCKLAND

172 MAIN STREET
NANUET, NY 10954

MICHAEL SHILALE ARCHITECTS, L.L.P.
140 Park Avenue New City, NY 10956 Tel 845-709-8200
www.shilale.com

© COPYRIGHT, MICHAEL SHILALE ARCHITECTS, ALL RIGHTS RESERVED.

Drawing Title
PIPING RISER DIAGRAMS

Drawing No.
M302

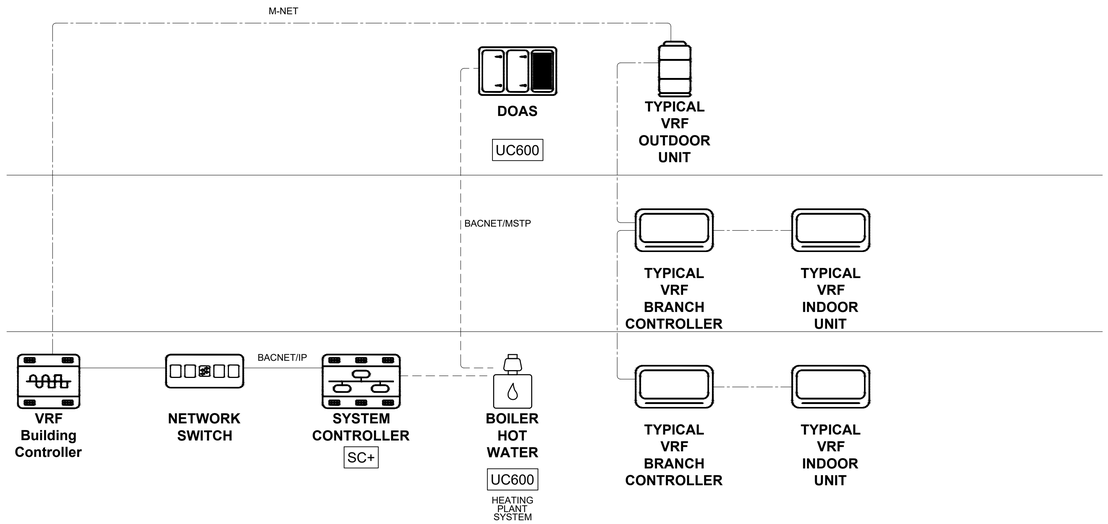

1 BMS OVERALL CONTROL DIAGRAM

SCALE: N.T.S.

NOTE:
1. CONTRACTOR SHALL HAVE MEETING WITH OWNER TO VERIFY AND CONFIRM LOCATION FOR ALL NEW CONTROLLERS, NETWORK SWITCH, THERMOSTATS PRIOR TO FURNISHING AND INSTALLING EQUIPMENT.
2. REFER TO SEQUENCE OF OPERATIONS SPECIFICATION SECTION 230993 FOR ADDITIONAL INFORMATION.

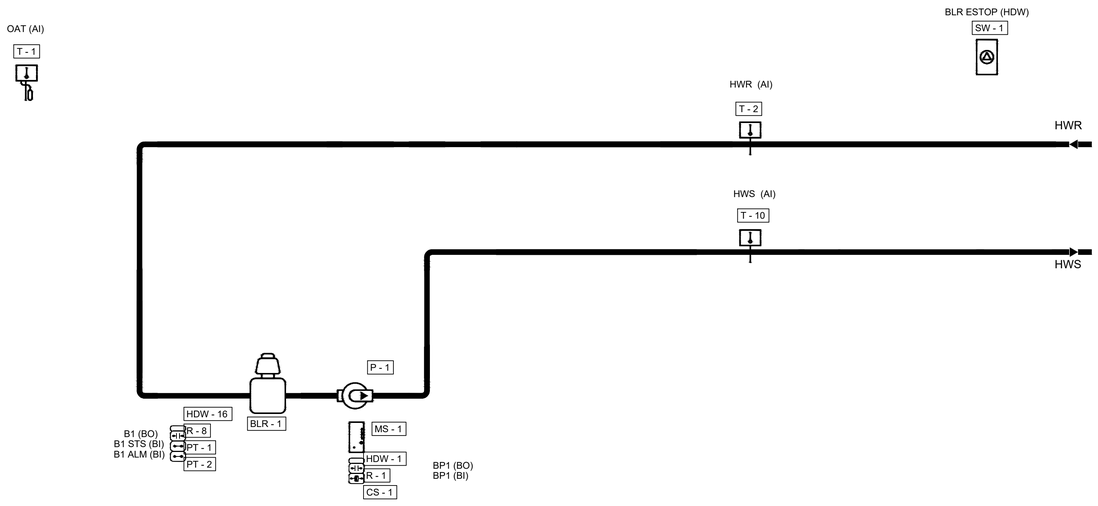

2 HEATING PLANT SYSTEM CONTROL DIAGRAM

SCALE: N.T.S.

NOTE:
1. REFER TO SEQUENCE OF OPERATIONS SPECIFICATION SECTION 230993 FOR ADDITIONAL INFORMATION.

CONTROLS ABBREVIATIONS

AI	ANALOG INPUT
AO	ANALOG OUTPUT
ALM	ALARM
ACT	ACTUATOR
B, BLR	BOILER
BI	BINARY INPUT
BO	BINARY OUTPUT
BP	BOILER PUMP
BYPD	BYPASS DAMPER
CMP	COMPRESSOR
CND	CONDENSATE
CO2	CARBON DIOXIDE
CS	CLOSED SWITCH
CV	CONTROL VALVE
DA	DISCHARGE AIR
DPS	DIFFERENTIAL PRESSURE SWITCH
DPT	DIFFERENTIAL PRESSURE TRANSMITTER
DX	DIRECT EXPANSION (REFRIGERANT)
EW	ENERGY WHEEL
FTR	FINNED TUBE RADIATOR
FIL	FILTER
FROSTAT	FREEZESTAT
FS	FREEZESTAT SENSOR
GH	GAS HEAT
H	HUMIDITY
HDSCO	HIGH DISCHARGE PRESSURE CUTOUT
HDW	HARDWARE
HGRH	HOT GAS REHEAT
LAT	LEAVING AIR TEMPERATURE
MAT	MIXED AIR TEMPERATURE
MS	MOTOR STARTER
OA	OUTSIDE AIR
OAT	OUTSIDE AIR TEMPERATURE
OAH	OUTSIDE AIR HUMIDITY
OAD	OUTSIDE AIR DAMPER
OVRFL	OVERFLOW
P	PUMP
R	RELAY
RA	RETURN AIR
RAT	RETURN AIR TEMPERATURE
RAH	RETURN AIR HUMIDITY
RAD	RETURN AIR DAMPER
RLF	RELIEF
REV	REVERSING
SA	SUPPLY AIR
SAF	SUPPLY AIR FAN
SD	SMOKE DETECTOR
SPT	SPACE TEMPERATURE
SP	SETPOINT
STS	STATUS
VLV	VALVE
VFD	VARIABLE FREQUENCY DRIVE
VRF	VARIABLE REFRIGERANT FLOW
VN DIR	VANE DIRECTION

CONTROLS SYMBOLS

- OUTSIDE AIR TEMPERATURE
- VARIABLE FREQUENCY DRIVE
- EMERGENCY STOP SWITCH
- MOTOR STARTER
- BOILER
- PUMP
- DUCT PRESSURE
- DUCT HIGH PRESSURE CUTOUT
- DUCT DIFFERENTIAL PRESSURE
- DX COIL
- GAS HEAT
- 2 WAY VALVE
- HOT GAS REHEAT
- DUCT CO2
- DUCT HUMIDITY
- DUCT TEMPERATURE
- DISCHARGE VANES
- BASEBOARD HEATER
- DAMPER ACTUATOR
- DUCT SMOKE DETECTOR
- FAN, SUPPLY OR RETURN
- AIR FILTER
- HEAT PUMP COIL
- VRF WALL CONTROLLER
- BAROMETRIC DAMPER
- PARALLEL DAMPER
- DUCT AVERAGING TEMPERATURE
- ENERGY WHEEL
- CONDENSATE OVERFLOW
- FREEZESTAT
- REVERSING VALVE
- RELAY SOCKET
- RELAY
- CURRENT SENSOR
- UNIVERSAL POINT

No.	Date	Revisions
0	02-18-25	RFP SET

Drawn by WM/AW
Checked by PC/ERF
Project No. 40034G
Scale AS SHOWN
Date 02/18/2025

GREENMAN PEDERSEN, INC
2 EXECUTIVE BOULEVARD
SUITE 202
SUFFERN, NY 10901

Mechanical, Electrical & Structural Engineer:

ATZL, NASHER, & ZIGLER
234 North Main Street
New City, NY 10956

Civil Engineer:

RENOVATION OF ROCKLAND GREEN ADMINISTRATIVE HEADQUARTERS AND CONSTRUCTION OF AN IMMERSIVE THEATRE EXPERIENCE

TOWN OF CLARKSTOWN
COUNTY OF ROCKLAND

172 MAIN STREET
NANUET, NY 10954

MICHAEL SHILALE ARCHITECTS, L.L.P.
140 Park Avenue New City, NY 10956 Tel 845-709-9200
www.shilale.com

© COPYRIGHT, MICHAEL SHILALE ARCHITECTS, ALL RIGHTS RESERVED.

Drawing Title
CONTROL ABBREV, SYMBOLS, BMS OVERALL & HTG PLNT CONTROL DIAGRAMS

Drawing No.
M401

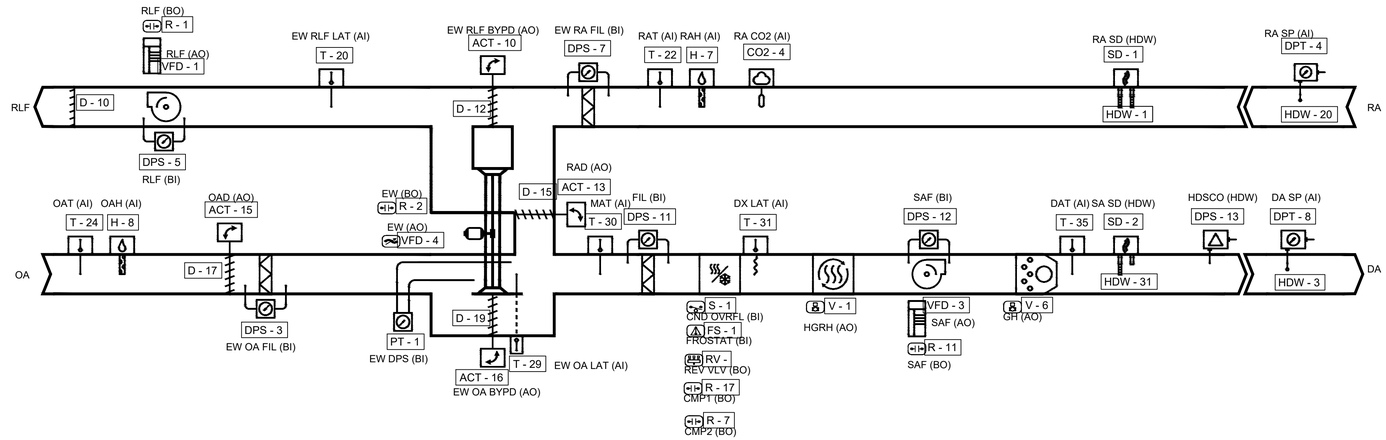

1 DOAS CONTROL DIAGRAM

SCALE: N.T.S.

NOTE:
1. REFER TO SEQUENCE OF OPERATIONS SPECIFICATION SECTION 230993 FOR ADDITIONAL INFORMATION.
2. TYPICAL CONTROL DIAGRAM PROVIDED. CONTRACTOR TO COORDINATE EXACT WIRING SIZES AND CONNECTIONS WITH MANUFACTURER.

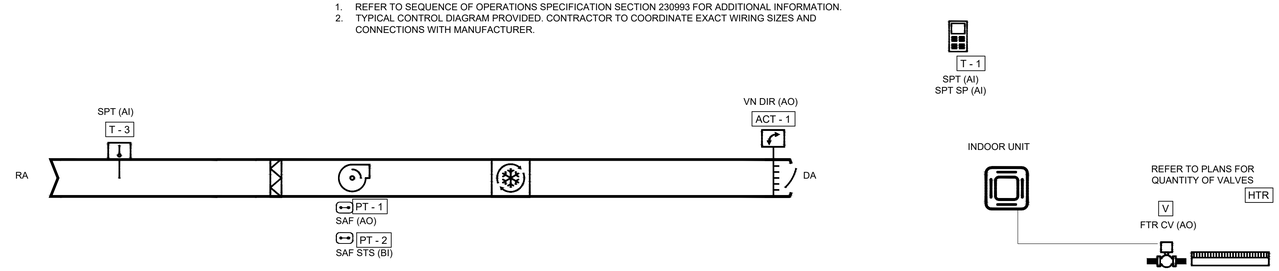

2 TYPICAL VRF INDOOR UNIT CONTROL DIAGRAM

SCALE: N.T.S.

NOTE:
1. REFER TO SEQUENCE OF OPERATIONS SPECIFICATION SECTION 230993 FOR ADDITIONAL INFORMATION
2. TYPICAL CONTROL DIAGRAM PROVIDED. CONTRACTOR TO COORDINATE EXACT WIRING SIZES AND CONNECTIONS WITH MANUFACTURER.

1) OUTDOOR UNITS, INDOOR UNITS, AND BRANCH CONTROLLER ICONS ARE REPRESENTATIVE ONLY. ACTUAL EQUIPMENT MAY APPEAR DIFFERENTLY.

2) CONNECT RED WIRE ON M1, BLACK WIRE ON M2, AND SHIELD ON S.

3) REMOTE CONTROLLERS CAN BE WIRED 3 WAYS. SEE SCHEDULE FOR INDOOR UNIT REMOTE CONTROLLER WIRING METHOD.
A) WIRED TO THE INDOOR UNIT'S REMOTE CONTROLLER TERMINALS 1 AND 2 (METHOD A).
B) WIRED TO THE INDOOR UNIT'S TRANSMISSION TERMINALS M1 AND M2 (METHOD B).
C) WITHOUT A REMOTE CONTROLLER; NO REMOTE CONTROLLER WIRING (NOT SHOWN).

METHOD A:

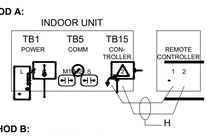

METHOD B:

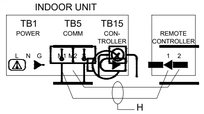

3 VRF OUTDOOR WIRING DIAGRAM

SCALE: N.T.S.

NOTE:
1. CONTRACTOR TO COORDINATE EXACT WIRING SIZES AND CONNECTIONS WITH MANUFACTURER.

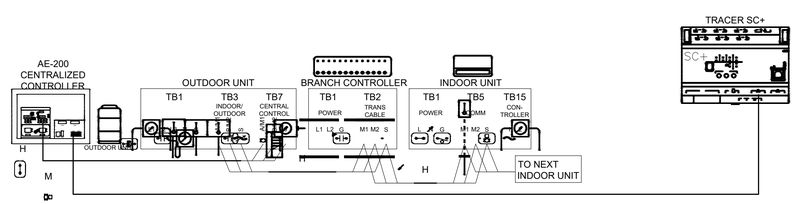

3 TYPICAL VRF OUTDOOR UNIT CONTROL WIRING

SCALE: N.T.S.

NOTE:
1. REFER TO SEQUENCE OF OPERATIONS SPECIFICATION SECTION 230993 FOR ADDITIONAL INFORMATION.
2. TYPICAL CONTROL DIAGRAM PROVIDED. CONTRACTOR TO COORDINATE EXACT WIRING SIZES AND CONNECTIONS WITH MANUFACTURER.

No.	Date	Revisions
0	02-18-25	RFP SET

Drawn by WM/AW
Checked by PC/ERF
Project No. 40034G
Scale AS SHOWN
Date 02/18/2025

GREENMAN PEDERSEN, INC
2 EXECUTIVE BOULEVARD
SUITE 202
SUFFERN, NY 10901

Mechanical, Electrical & Structural Engineer:

ATZL, NASHER, & ZIGLER
234 North Main Street
New City, NY 10956

Civil Engineer:

RENOVATION OF ROCKLAND GREEN ADMINISTRATIVE HEADQUARTERS AND CONSTRUCTION OF AN IMMERSIVE THEATRE EXPERIENCE

TOWN OF CLARKSTOWN
COUNTY OF ROCKLAND

175 MAIN STREET
NANUET, NY 10954

MICHAEL SHILALE ARCHITECTS, L.L.P.
140 Park Avenue New City, NY 10956 Tel 845-708-8200
www.shilale.com

© COPYRIGHT, MICHAEL SHILALE ARCHITECTS, ALL RIGHTS RESERVED.

Drawing Title
DOAS AND VRF CONTROL DIAGRAMS

Drawing No.
M402

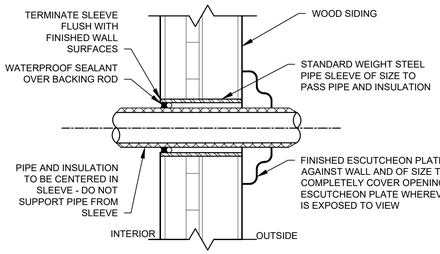

1 EXTERIOR WALL PIPE PENETRATION
SCALE: NONE

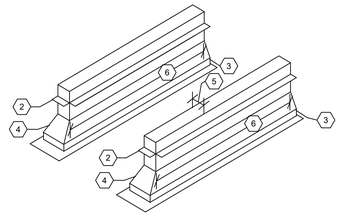

1. NOT USED
2. COUNTER FLASHING OVER TREATED WOOD NAILER
3. GALVANIZED STEEL, MIN. 18 GAGE WITH WELDED SEAMS
4. RAIL (PROVIDED BY DIV. 15)
5. MINIMUM 7 ½"
6. VERIFY DIMENSION WITH EQUIPMENT MANUFACTURER

2 ROOF MOUNTED EQUIPMENT RAIL SUPPORT
SCALE: NONE

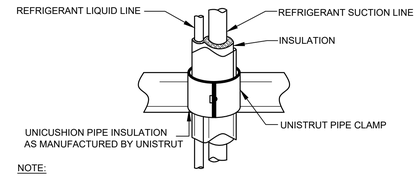

NOTE:
1. LIQUID AND SUCTION LINES MAY BE ROUTED TOGETHER FOR CONVENIENCE, BUT MUST BE COMPLETELY INSULATED FROM EACH OTHER. DO NOT SOLDER LIQUID AND SUCTION LINES TOGETHER. DO NOT ALLOW METAL TO METAL CONTACT.
2. LINES SHOULD BE INSTALLED WITH AS FEW BENDS AS POSSIBLE, ALLOWING SERVICE ACCESS TO THE INDOOR COIL.
3. SLOPE HORIZONTAL SUCTION LINES 1 INCH EVERY 20 FEET TOWARD THE OUTDOOR UNIT.
4. USE LONG RADIUS ELBOWS WHEREVER POSSIBLE, EXCEPT IN OIL RETURN TRAPS, WHERE SHORT RADIUS ELBOWS SHOULD BE USED.

3 REFRIGERANT PIPING SUPPORT
SCALE: NONE

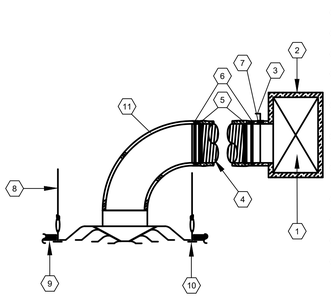

1. SUPPLY DUCT
2. DUCT INSULATION (AS SPECIFIED)
3. VOLUME DAMPER WITH LOCKING QUADRANT
4. ROUND INSULATED FLEXIBLE RUNOUT (3' MAX..)
5. HEAVY DUTY NYLON DUCT STRAP/CLAMP AROUND INNER DUCT LINER
6. HEAVY DUTY NYLON DUCT STRAP/CLAMP AROUND OUTER DUCT LINER
7. PROVIDE RAISED HAT CHANNEL ON INSULATED DUCTWORK
8. HANGER WIRE
9. CEILING TILE
10. STEEL GRID TEE
11. INSULATED METAL ROUND ELBOW SCREW ATTACHED TO DIFFUSER NECK

NOTES:
1. SUPPLY DIFFUSER IS SHOWN, RETURN AND EXHAUST ARE SIMILAR.

4 DIFFUSER/ GRILL CONNECTION DETAIL
SCALE: N.T.S.

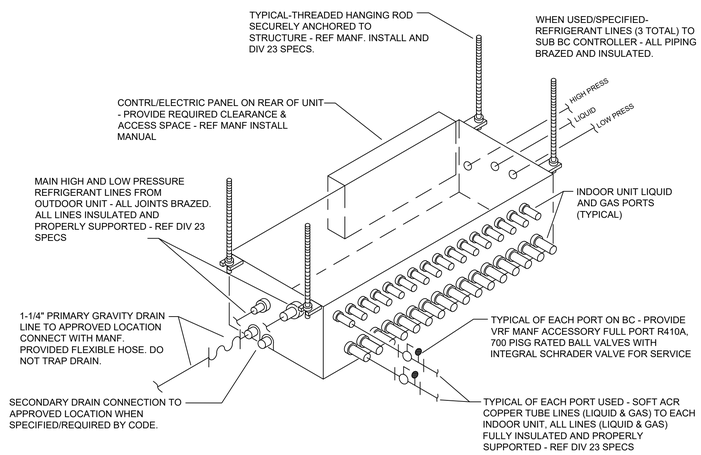

5 BC CONTROLLER DETAIL
SCALE: N.T.S.

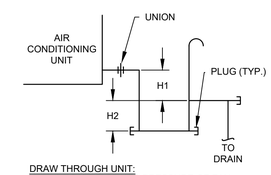

DRAW THROUGH UNIT:
H1= NEGATIVE STATIC PRESSURE OF FAN + 1" MIN.
H2= H1

6 CONDENSATE DRAIN TRAP SIZING
SCALE: NONE

NOTE:
1. MC RESPONSIBLE TO VERIFY AND COMPLY WITH MANUFACTURERS INSTALLATION INSTRUCTIONS FOR PROPER TRAP SIZING.

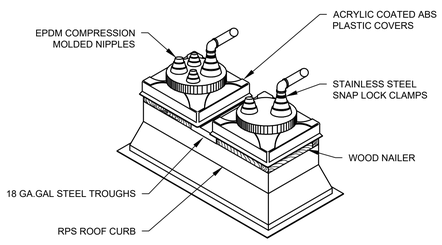

7 PIPE PORTAL AT ROOF PENETRATION
SCALE: N.T.S.

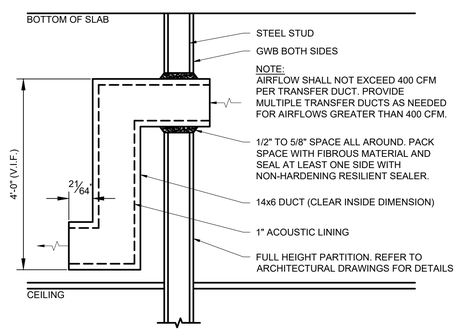

8 RETURN AIR TRANSFER DUCT DETAIL
SCALE: N.T.S.

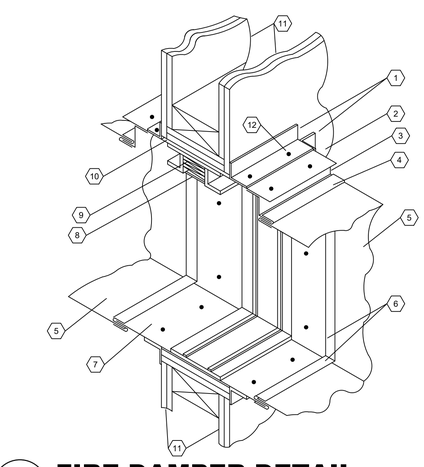

1. RETAINING ANGLE
2. STEEL SLEEVE
3. COLLAR EXTENSION
4. "S" SLIP BREAKAWAY CONNECTION
5. SHEET METAL DUCT
6. "S" SLIP CONNECTION
7. TYPICAL SLEEVE ATTACHMENT TO RETAINING ANGLE
8. FUSIBLE LINK
9. CURTAIN TYPE BLADES
10. CLEARANCE FOR EXPANSION
11. RATED SEPARATION
12. RETAINING ANGLE FASTENERS. (FASTENERS SPACED 8" APART) (MINIMUM 2 FASTENERS ON ALL 4 SIDES)

NOTES:
REFER TO SMACNA FIRE DAMPER GUIDE FOR CONSTRUCTION DETAILS

DAMPERS TO BE INSTALLED IN ACCORDANCE WITH MANUFACTURES PRINTED INSTRUCTIONS

PROVIDE DUCT ACCESS DOOR MINIMUM 16"X16" OR DUCT WIDTH BY 16" AT EACH FIRE DAMPER. LABEL EACH DOOR WITH ½" TALL LETTERS "FD". POSITION ACCESS DOOR TO PROVIDE SERVICE ACCESS OF THE FIRE DAMPER TO INCLUDE FUSIBLE LINK REPLACEMENT.

9 FIRE DAMPER DETAIL
SCALE: N.T.S.

No.	Date	Revisions
0	02-18-25	RFP SET

Drawn by WM/AW
Checked by PC/ERF
Project No. 40034G
Scale AS SHOWN
Date 02/18/2025

Mechanical, Electrical & Structural Engineer: GREENMAN PEDERSEN, INC
2 EXECUTIVE BOULEVARD
SUFFERN, NY 10901

Civil Engineer: ATZL, NASHER, & ZIGLER
234 North Main Street
New City, NY 10956

RENOVATION OF ROCKLAND GREEN ADMINISTRATIVE HEADQUARTERS AND CONSTRUCTION OF AN IMMERSIVE THEATRE EXPERIENCE
TOWN OF CLARKSTOWN
CITY OF ROCKLAND
170 MAIN STREET
NYACK, NY 10994

MICHAEL SHILALE ARCHITECTS, L.L.P.
140 Park Avenue New City, NY 10956 Tel 845-708-9200
www.shilale.com

© COPYRIGHT, MICHAEL SHILALE ARCHITECTS, ALL RIGHTS RESERVED.

Drawing Title
MECHANICAL DETAILS - 1

Drawing No.
M501

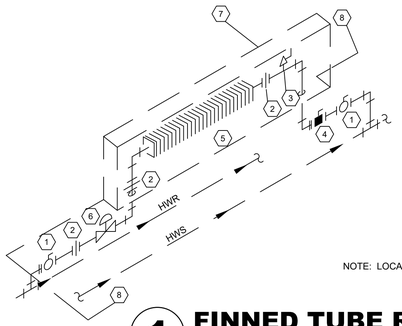

1. BALL VALVE
2. UNION
3. MANUAL AIR VENT
4. CALIBRATED BALANCING VALVE
5. FINNED ELEMENT
6. TWO-WAY CONTROL VALVE (ELECTRIC)
7. FIN RADIATION ENCLOSURE
8. FINISHED FLOOR

NOTE: LOCATE VALVES INSIDE BASEBOARD ENCLOSURE

1 FINNED TUBE RADIATOR
SCALE: NONE

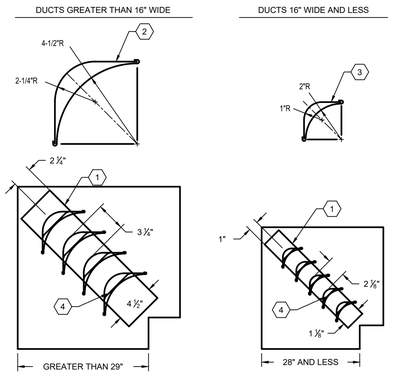

1. 22 GA VANE RUNNER BOLTED, SCREWED OR WELDED TO DUCT
2. LARGE DOUBLE VANE, MIN 24 GA, 72" MAX UNSUPPORTED VANE LENGTH
3. SMALL DOUBLE VANE, MIN 26 GA, 48" MAX UNSUPPORTED VANE LENGTH
4. TURNING VANE MOUNTED ON EACH TAB OF RUNNER. EVERY RUNNER TAB MUST RECEIVE A TURNING VANE.

2 DUCT ELBOW WITH TURNING VANES
SCALE: N.T.S.

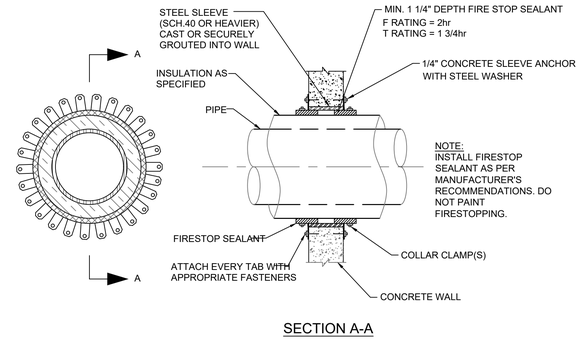

SECTION A-A

3 PIPE THRU WALL (FIRE RATED)
SCALE: N.T.S.

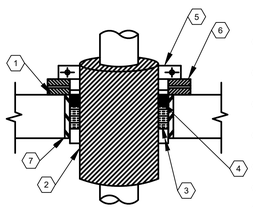

1. WOOD FLOOR.
2. STEEL, IRON OR COPPER PIPE WITH UP TO 2" THICK FIBERGLASS INSULATION.
3. TIGHTLY PACKED MINERAL WOOL, NOMINAL 4 PCF, TO A 3" DEPTH.
4. SEALANT INSTALLED TO A 1" DEPTH. ANNULUS RANGING FROM 1/4" MINIMUM TO 3" MAXIMUM.
5. STANDARD PIPE CLAMP.
6. STEEL BEARING PLATE.
7. STEEL SLEEVE

4 PIPE THRU FLOOR
SCALE: N.T.S.

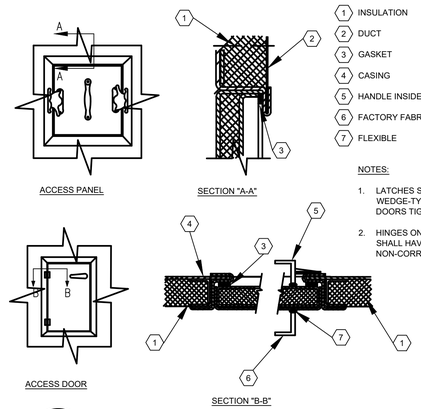

ACCESS PANEL

SECTION "A-A"

ACCESS DOOR

SECTION "B-B"

1. INSULATION
2. DUCT
3. GASKET
4. CASING
5. HANDLE INSIDE
6. FACTORY FABRICATED LATCH
7. FLEXIBLE

NOTES:

1. LATCHES SHALL BE OF THE WEDGE-TYPE TO CLOSE DOORS TIGHTLY
2. HINGES ON ACCESS DOORS SHALL HAVE NON-CORROSIVE PINS

5 DUCT ACCESS DOOR DETAIL
SCALE: N.T.S.

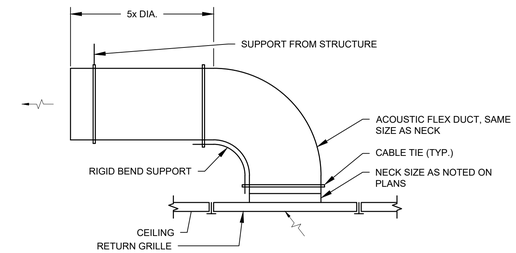

6 RETURN GRILL FOR RETURN PLENUM
SCALE: N.T.S.

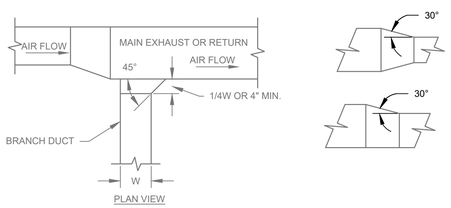

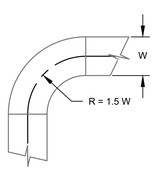

NOTE: ELBOWS 8" AND SMALLER SHALL BE RADIUS ELBOW TYPE ONLY. SEE DETAIL 2 ON THIS DRAWING FOR DUCT ELBOW WITH TURNING VANES.

7 TYPICAL DUCTWORK DETAILS
SCALE: N.T.S.

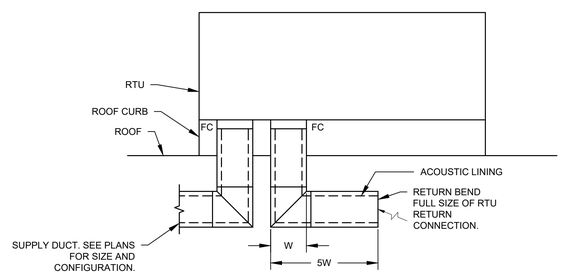

NOTE:
SYSTEM WITH PLENUM RETURN IS SHOWN. DUCTED RETURNS ARE SIMILAR.

8 ROOFTOP UNIT DUCTWORK DETAIL
SCALE: N.T.S.

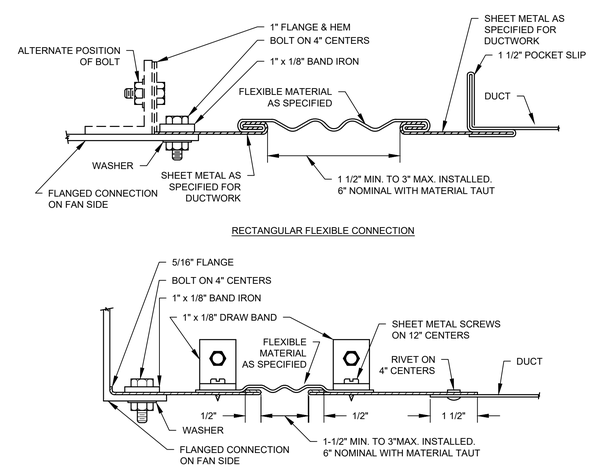

RECTANGULAR FLEXIBLE CONNECTION

ROUND FLEXIBLE CONNECTION

9 DUCT FLEXIBLE CONNECTOR
SCALE: N.T.S.

No.	Date	Revisions
0	02-18-25	RFP SET

Drawn by WM
Checked by PC
Project No. 40034G
Scale NONE
Date 02/18/2025

GREENMAN PEDERSEN, INC
2 EXECUTIVE BOULEVARD
SUITE 202
SUFFERN, NY 10901

Mechanical, Electrical & Structural Engineer:

ATZL, NASHER, & ZIGLER
234 North Main Street
New City, NY 10956

Civil Engineer:

RENOVATION OF ROCKLAND GREEN ADMINISTRATIVE HEADQUARTERS AND CONSTRUCTION OF AN IMMERSIVE THEATRE EXPERIENCE

TOWN OF CLARKSTOWN
COUNTY OF ROCKLAND

175 MAIN STREET
NYACK, NY 10994

MICHAEL SHILALE ARCHITECTS, L.L.P.
140 Park Avenue New City, NY 10956 Tel 845-708-9200
www.shilale.com

© COPYRIGHT, MICHAEL SHILALE ARCHITECTS, ALL RIGHTS RESERVED.

Drawing Title
MECHANICAL DETAILS - 2

Drawing No.
M502

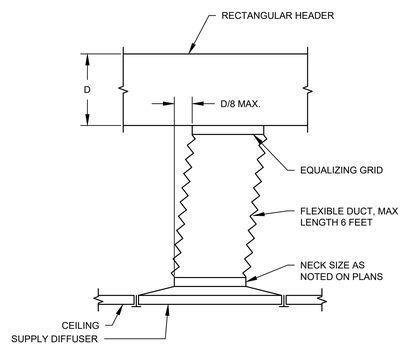

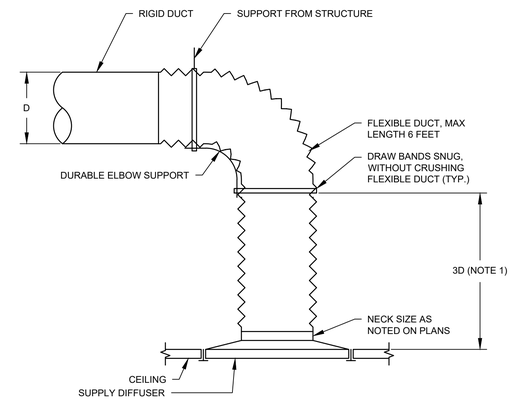

NOTES:
1. THE LENGTH OF STRAIGHT DUCT UPSTREAM OF DIFFUSER SHALL NOT BE LESS THAN 1D. WHEN THE LENGTH OF STRAIGHT DUCT UPSTREAM OF THE DIFFUSER IS LESS THAN 3D, PROVIDE AN EQUALIZING GRID.
2. VOLUME DAMPERS ARE NOT SHOWN IN THIS DETAIL. PROVIDE WHERE INDICATED ON THE PLANS OR AS OTHERWISE SPECIFIED.
3. SUPPLY DIFFUSERS ARE SHOWN, RETURN GRILLES ARE SIMILAR.

1 AIR OUTLET CONNECTION DETAIL
SCALE: N.T.S.

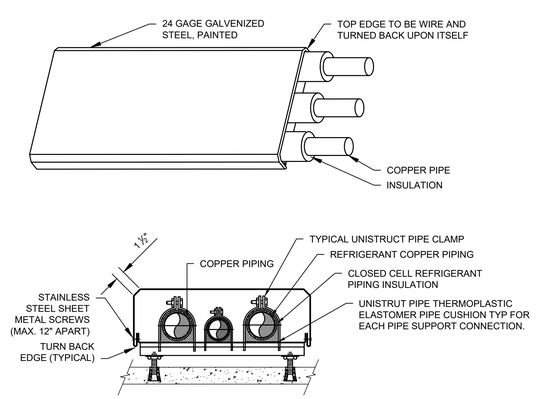

NOTES:
1. PROVIDE SUPPORT 6 FT ON CENTER
2. ALL PIPING JOINTS TO BE BRAZED

2 REFRIGERANT AND CONDENSATE PIPING
SCALE: N.T.S.

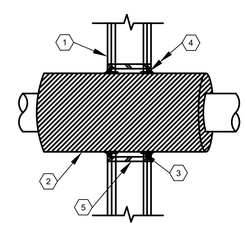

1. GYPSUM WALL BOARD
2. STEEL OR IRON PIPE TO 12" OR COPPER PIPE UP TO 6" WITH UP TO 3" FIBERGLASS OR MINERAL WOOL INSULATION
3. WRAP STRIP. WRAP PRODUCT AROUND PIPE, SECURE WITH STEEL TIE WIRE, AND RECESS 1-¾" INTO WALL CAVITY
4. SEALANT. INSTALL ½" BEAD AROUND WRAP STRIP/INSULATION INTERSTICES. ANNULUS AFTER INSTALLATION OF WRAP STRIP(S) SHALL RANGE FROM POINT CONTACT TO ½" MAXIMUM
5. STEEL SLEEVE

3 PIPE THRU GWB WALL
SCALE: N.T.S.

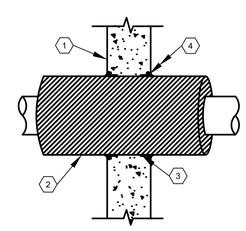

1. CONCRETE OR CONCRETE BLOCK WALL
2. STEEL OR IRON PIPE TO 12" OR COPPER PIPE UP TO 6" WITH UP TO 3" FIBERGLASS OR MINERAL WOOL INSULATION
3. WRAP STRIP. WRAP PRODUCT AROUND PIPE, SECURE WITH STEEL TIE WIRE, AND RECESS 1-3/4" INTO WALL CAVITY
4. SEALANT. INSTALL 1/4" BEAD AROUND WRAP STRIP/INSULATION INTERSTICES. ANNULUS AFTER INSTALLATION OF WRAP STRIP(S) SHALL RANGE FROM POINT CONTACT TO 1/4" MAXIMUM

4 PIPE THRU MASONRY WALL
SCALE: N.T.S.

No.	Date	Revisions
0	02-18-25	RFP SET

Drawn by WM
Checked by PC
Project No. 40034G
Scale NONE
Date 02/18/2025

GREENMAN PEDERSEN, INC
2 EXECUTIVE BOULEVARD
SUFFERN, NY 10901
Mechanical, Electrical & Structural Engineer:

ATZL, NASHER, & ZIGLER
234 North Main Street
New City, NY 10956
Civil Engineer:

RENOVATION OF ROCKLAND GREEN ADMINISTRATIVE HEADQUARTERS AND CONSTRUCTION OF AN IMMERSIVE THEATRE EXPERIENCE
TOWN OF CLARKSTOWN
COUNTY OF ROCKLAND
175 MAIN STREET
NANUET, NY 10954

MICHAEL SHILALE ARCHITECTS, L.L.P.
140 Park Avenue New City, NY 10956 Tel 845-708-9200
www.shilale.com

© COPYRIGHT, MICHAEL SHILALE ARCHITECTS, ALL RIGHTS RESERVED.

Drawing Title
MECHANICAL DETAILS - 3

Drawing No.
M503

PLUMBING LEGEND AND ABBREVIATIONS

	EXISTING TO BE REMOVED	A.F.F.	ABOVE FINISHED FLOOR
		A.H.J.	AUTHORITY HAVING JURISDICTION
	SANITARY PIPING	CL OR ℄	CENTER LINE
		CLG.	CEILING
	VENT PIPING	COL.	COLUMN
		CONN.	CONNECTION
	COLD WATER PIPING	CONT.	CONTINUED
		DIA., Ø	DIAMETER
	HOT WATER PIPING	DN.	DOWN
		DWG.	DRAWING
		ELEV.	ELEVATION
	GATE VALVE	F.F./FIN. FLR.	FINISHED FLOOR
		FLR.	FLOOR
	CHECK VALVE	G.P.M.	GALLONS PER MINUTE
		G.P.H.	GALLONS PER HOUR
	BALL VALVE	MAX.	MAXIMUM
		MIN.	MINIMUM
FS		NC	NORMALLY CLOSED
	FLOW SENSOR/SWITCH	N.I.C.	NOT IN CONTRACT
		PRESS.	PRESSURE
	CONNECT TO EXISTING	P.S.I.	POUNDS PER SQUARE INCH
		S.F./SQ. FT.	SQUARE FEET
		STD.	STANDARD
	PIPE DROPPING DOWN	TYP.	TYPICAL
		D	DRAIN PIPE
	PIPE RISING UP	HP	HORSE POWER
		OD	OUTSIDE DIAMETER
	PIPE BOTTOM CONNECTION	TYP.	TYPICAL
		V.I.F.	VERIFY IN FIELD
		OC	ON CENTER
	PIPE TOP CONNECTION	TMV	THERMOSTATIC MIXING VALVE
		WHA	WATER HAMMER ARRESTOR
G	NATURAL GAS PIPE		

PLUMBING DEMOLITION NOTES:

1. THE CONTRACTOR SHALL BE RESPONSIBLE FOR THE DEMOLITION OF ALL MATERIALS, PIPING AND APPURTENANCES AS DEPICTED ON THE DEMOLITION DRAWINGS. ADDITIONALLY THE CONTRACTOR SHALL ALSO BE RESPONSIBLE FOR THE DEMOLITION OF ANY ADDITIONAL MATERIALS, EQUIPMENT, PIPING ETC. NOT ACCURATELY OR COMPLETELY SHOWN ON THE DEMOLITION DRAWINGS THAT MAKE UP OR ARE AN APPURTENANCE OR COMPONENT OR THE MAJOR EQUIPMENT, SYSTEM, PIPING, ETC. DESIGNATED TO BE DEMOLISHED.
2. ALL PIPING AND APPURTENANCES DEPICTED ON THE DEMOLITION DRAWINGS THAT ARE NOT PART OF THE ACTUAL DEMOLITION WORK ARE SHOWN FOR REFERENCE ONLY. THE CONTRACTOR SHALL VERIFY ALL DEMOLITION WORK IN THE FIELD PRIOR COMMENCEMENT OF DEMOLITION, AND REPORT ANY AND ALL DISCREPANCIES TO THE SITE CONSTRUCTION MANAGER
3. THE CONTRACTOR WILL OBTAIN THE OWNER'S PERMISSION IN WRITING PRIOR TO DISPOSING OF ANY SALVAGEABLE MATERIALS.
4. THE CONTRACTOR SHALL BE RESPONSIBLE FOR THE ERECTION OF ALL TEMPORARY SCAFFOLDING, DUNNAGE STEEL, MATERIAL CHUTES, ETC.
5. THE CONTRACTOR SHALL BE RESPONSIBLE FOR THE REMOVAL AND TEMPORARY STORAGE OF ALL EQUIPMENT, PIPING, COMPONENTS AND APPURTENANCES OF ALL DEMOLISHED MATERIALS. THE CONTRACTOR SHALL DETERMINE THE SEQUENCE OF REMOVAL, MEANS OF EQUIPMENT EGRESS, AS WELL TEMPORARY LAY DOWN AREAS.
6. THE CONTRACTOR SHALL BE RESPONSIBLE FOR OBTAINING ANY AND ALL PERMITS REQUIRED FOR REMOVAL AND/OR STORAGE OF THE DEMOLISHED MATERIALS (INCLUDING ALL HAZARDOUS MATERIALS). ALL DEBRIS SHALL BE LEGALLY DISPOSED. THE CONTRACTOR WILL PROVIDE ALL DEMOLITION CONTAINERS AND DUMPSTERS AS REQUIRED.
7. CONTRACTOR SHALL MAINTAIN THE CONSTRUCTION AREA IN ACLEAN AND ORDERLY CONDITION WITH DAILY REMOVAL OF ALL DEBRIS. NO DEBRIS SHALL BE ALLOWED TO ACCUMULATE.
8. THE CONTRACTOR SHALL BE RESPONSIBLE FOR THE PROTECTION OF ALL EXISTING EQUIPMENT, PIPING, COMPONENTS, ETC. NOT DESIGNATED FOR DEMOLITION.
9. THE CONTRACTOR SHALL BE RESPONSIBLE FOR ALL TEMPORARY SUPPORTS, ELECTRICAL AND WATER SERVICES AS REQUIRED TO PERFORM THE DEMOLITION WORK.
10. THE CONTRACTOR SHALL BE RESPONSIBLE TO ERECT ALL BARRIERS, BRACING, DUSTPROOF PARTITIONS, FENCES AND WARNINGS SIGNS AS REQUIRED TO ENSURE THE SAFETY AND PREVENT INJURY AND INCONVENIENCE TO THE GENERAL PUBLIC.
11. THE PLUMBING CONTRACTOR SHALL BE RESPONSIBLE FOR ALL CUTTING AND PATCHING REQUIRED FOR THE INSTALLATION OF ALL PLUMBING WORK ON THIS PROJECT. CUTTING AND PATCHING METHODS SHALL CONFORM TO THE REQUIREMENTS OF THE OWNER AND THE ARCHITECT. PATCHES IN FIRE RATED DEMISING WALLS, CEILING OR FLOORS SHALL MAINTAIN THE FIRE RATING OF THOSE BARRIERS BY THE USE OF APPROVED MATERIALS INCLUDING SPECIAL FIRE RATED SEALING COMPOUNDS OR MATERIALS IDENTICAL TO THE BARRIER MATERIALS.

GENERAL NOTES:

1. CONTRACTOR TO COMPLY WITH THE 2020 NYS BUILDING CODE AND ADAPTED APPENDICES, LOCAL PLUMBING CODES AND ALL AUTHORITIES HAVING JURISDICTION.
2. PROVIDE LABOR, MATERIALS, TOOLS, MACHINERY, EQUIPMENT, AND SERVICES NECESSARY TO COMPLETE THE WORK UNDER THIS CONTRACT. ALL SYSTEMS AND EQUIPMENT SHALL BE COMPLETE IN EVERY ASPECT AND ALL ITEMS OF MATERIAL, EQUIPMENT AND LABOR SHALL BE PROVIDED FOR A FULLY OPERATIONAL SYSTEM AND READY FOR USE. COORDINATE THE WORK WITH THE WORK OF THE OTHER TRADES IN ORDER TO RESOLVE ALL CONFLICTS WITHOUT IMPEDING THE JOB PROGRESS.
3. EXAMINE THE DRAWINGS AND OTHER DIVISIONS, AND SECTIONS OF THE SPECIFICATIONS IN ORDER TO DETERMINE THE EXTENT OF THE WORK REQUIRED TO BE COMPLETED UNDER THIS DIVISION. FAILURE TO EXAMINE ALL THE CONTRACT DOCUMENTS FOR THIS PROJECT WILL NOT RELIEVE THIS SECTION AND ANY OTHER SECTIONS OF THEIR RESPONSIBILITIES TO PERFORM THE WORK REQUIRED FOR A COMPLETE FULLY OPERATIONAL AND SATISFACTORY INSTALLATION.
4. THE WORK INCLUDES BUT IS NOT LIMITED TO THE FOLLOWING SYSTEMS, EQUIPMENT AND SERVICES, AS SPECIFIED HEREBY. START-UP SERVICES SHALL BE INCLUDED IN THE BID.
5. ALL SYSTEMS, EQUIPMENT AND SERVICES SPECIFIED HEREIN SHALL BE PROVIDED COMPLETE AND READY FOR USE. ALL EQUIPMENT, PIPING, ARE NEW, FURNISHED AND INSTALLED BY THIS CONTRACTOR, UNLESS OTHERWISE NOTED.
6. INSTALL ACCESS FOR SERVICING AND MAINTENANCE. COORDINATE THE FINAL LOCATION OF CONCEALED EQUIPMENT AND DEVICES REQUIRING ACCESS WITH FINAL LOCATION OF ACCESS PANELS AND DOORS. ALLOW AMPLE SPACE FOR REMOVAL OF ALL PARTS THAT REQUIRE REPLACEMENT OR SERVICING.
7. VERIFY FINAL LOCATIONS FOR ROUGH WORK WITH FIELD MEASUREMENTS AND WITH THE REQUIREMENTS OF THE ACTUAL EQUIPMENT BEING CONNECTED.
8. PIPING ARE SHOWN DIAGRAMMATICALLY AND DOES NOT SHOW ALL OFFSETS, DROPS AND RISES OF RUNS. THE CONTRACTOR SHALL ALLOW IN HIS PRICE FOR ROUTING OF PIPING TO AVOID OBSTRUCTIONS. EXACT LOCATIONS ARE SUBJECT TO APPROVAL OF ARCHITECT. COORDINATION WITH THE EXISTING SERVICES, INCLUDING THOSE OF OTHER TRADES IS REQUIRED.
9. ARRANGE FOR CHASES, SLOTS, AND OPENINGS IN OTHER AND ALL COMPONENTS TO ALLOW FOR INSTALLATIONS.
10. COORDINATE THE INSTALLATION OF REQUIRED SUPPORTING DEVICES AND SIZE OF SLEEVES TO BE SET IN POURED CONCRETE AND OTHER STRUCTURAL COMPONENTS AS THEY ARE CONSTRUCTED.
11. COORDINATE THE INSTALLATION OF MATERIALS AND EQUIPMENT ABOVE GRADE WITH MECHANICAL AND SUPPRESSION SYSTEM, LIGHT FIXTURES, AND ALL OTHER INSTALLATIONS AND ACCESSORIES.
12. PROVIDE EQUIPMENT AND SYSTEMS THAT, AS DEFINED HEREIN, SHALL BE QUIET AND FREE OF APPARENT VIBRATION IN OPERATIONS.
13. INSTALL WORK SO AS TO BE READILY ACCESSIBLE FOR OPERATION, MAINTENANCE AND REPAIR. MINOR DEVIATIONS FROM DRAWINGS MAY BE MADE TO ACCOMPLISH THIS, BUT CHANGES INVOLVING EXTRA COST SHALL NOT BE MADE WITHOUT APPROVAL.
14. THE CONTRACTOR SHALL KEEP ALL EQUIPMENT AND MATERIALS, AND ALL PARTS OF THE BUILDING, EXTERIOR SPACE AND ADJACENT STREETS, SIDEWALKS AND PAVEMENTS, FREE FROM MATERIAL AND DEBRIS RESULTING FROM THE EXECUTION OF THIS WORK. EXCESS MATERIALS WILL NOT BE PERMITTED TO ACCUMULATE EITHER IN THE INTERIOR OR THE EXTERIOR.
15. ALL PRESENT MATERIAL, EQUIPMENT AND CONSTRUCTION DEBRIS TO BE REMOVED UNDER THIS CONTRACT SHALL BECOME THE PROPERTY OF THE CONTRACTOR WITH THE EXCEPTION OF SPECIFIC EQUIPMENT AND APPARATUS REQUESTED BY THE BUILDING REPRESENTATIVE, ARCHITECT OR AS NOTED TO BE RELOCATED ON THE DRAWINGS SHALL BE PROPERLY DISPOSED OF BY THIS CONTRACTOR.
16. THE FINAL ACCEPTANCE WILL BE MADE AFTER THE CONTRACTOR HAS ADJUSTED HIS EQUIPMENT, BALANCED THE VARIOUS SYSTEMS, DEMONSTRATED THAT IT FULFILLS THE REQUIREMENTS OF THE DRAWINGS AND SPECIFICATIONS AND HAS FURNISHED ALL THE REQUIRED CERTIFICATES OF INSPECTION AND APPROVAL.
17. CONTRACTOR TO SUBMIT SHOP DRAWING FOR APPROVAL FOR ALL SYSTEMS.
18. PRESSURE TEST WATER SUPPLY SYSTEM 1 1/2 TIMES WORKING PRESSURE FOR 2 HR MIN.
19. ALL TRENCHING, EXCAVATION, BACKFILLING, AND SLAB REPAIR, ALL CORE DRILLING, SLEEVING, AND FIRESTOPPING, ALL CUTTING AND PATCHING SHALL BE PERFORMED BY EACH TRADE UTILIZING QUALIFIED CONTRACTORS FOR THE WORK. REFER TO DEMOLITION GENERAL NOTES ON DRAWING AD.101 FOR ADDITIONAL REQUIREMENTS FOR CUTTING AND PATCHING, REMOVALS, SALVAGE, AND REPAIRS. THE CONTRACTOR SHALL PATCH AND REPAIR ALL FLOORS, WALLS, CEILINGS, ETC. DAMAGED OR EXPOSED DUE TO WORK OR REMOVALS AND FINISH TO MATCH ADJOINING SURFACES.

PLUMBING INSTALLATION NOTES:

1. CONTRACTOR SHALL VERIFY ALL EXISTING CONDITIONS PRIOR TO STARTING WORK. REFER PROBLEMATIC CONDITIONS TO ENGINEER.
2. DRAWINGS ARE DIAGRAMMATIC AND INDICATE GENERAL ARRANGEMENT OF WORK. BASIC DESIGN CONCEPTS INDICATED ARE MINIMAL AND MUST BE FOLLOWED OR BETTERED. DO NOT SCALE DRAWINGS.
3. WORK IS NOT SHOWN IN FINITE DETAIL BUT IS INTENDED TO INCLUDE ITEMS NECESSARY FOR COMPLETION AND PROPER OPERATION.
4. PROVIDE REQUIRED SUPPORTS AND HANGERS FOR PIPING, FIXTURES AND EQUIPMENT, SO LOADING WILL NOT EXCEED ALLOWABLE LOADINGS.
5. ALL SYSTEMS SHALL BE LEFT IN PERFECT WORKING ORDER UPON COMPLETION OF ALL NEW WORK.
6. FIXTURES (GENERAL): TO COMPLETE WITH TRIMMINGS AND FITTINGS, INCLUDING FAUCETS, SUPPLIES, STOPS, TRAPS, TAILPIECES, WASTE PLUGS, CASINGS, HANGERS, PLATES, BRACKETS, ANCHORS, SUPPORTS, HARDWARE AND FASTENING DEVICES.
7. WHERE FIXTURES OR TRIM ARE DAMAGED OR BROKEN DURING THE INSTALLATION, THEY SHALL BE REPLACED WITH NEW FIXTURES.
8. EXAMINE ROUGH-IN WORK OF POTABLE WATER AND WASTE PIPING SYSTEMS TO VERIFY ACTUAL LOCATIONS OF PIPING CONNECTIONS PRIOR TO INSTALLING FIXTURES. CORRECT ANY INCORRECT LOCATION OF PIPING, AND OTHER UNSATISFACTORY CONDITIONS FOR INSTALLATION OF PLUMBING FIXTURES.
9. EXERCISE CARE IN HANDLING OF FIXTURES, TRIM, PIPE, AND FITTINGS. USE TOOLS DESIGNED TO PREVENT DAMAGE TO SURFACE FINISHES.
10. SET FIXTURES LEVEL AND UNIFORMLY, WITH CONNECTIONS AT RIGHT ANGLES TO WALL AND PROPERLY CENTERED. LAY OUT ROUGHING ACCURATELY AND IN COORDINATION WITH SPACE AND FINISH REQUIREMENTS. IF FIELD CUT-OUTS AND HOLES ARE REQUIRED, USE PROPER CUTTING AND DRILLING TOOLS TO MAINTAIN INTEGRITY OF FINISHED SURFACE.
11. LOCATE WASTE OUTLETS AND WATER SUPPLIES AT CONSTANT HORIZONTAL LEVELS, WITH WASTE OUTLET CENTERED ON FIXTURE DRAIN CONNECTION AND WATER SUPPLIES SPACED EQUALLY RIGHT.
12. SUPPORT WALL HUNG FIXTURES RIGIDLY FROM BUILDING CONSTRUCTION, NOT FROM PIPING, BY MEANS OF CONCEALED METAL SUPPORTING MEMBERS DESIGNED TO CARRY WEIGHT OF FIXTURE UNDER CONDITIONS OF UNUSUAL LOADING, WITH NO STRESS PLACED ON WASTE CONNECTION OR ANY OTHER PART OF SYSTEM.
13. SECURE FLOOR MOUNT SUPPORTS TO SLAB. SECURE WALL MOUNT SUPPORTS TO I/4" THICK METAL BACKUP PLATE SECURED TO WALL CONSTRUCTION. DO NOT USE WIRE, NAILS, OR OTHER MAKESHIFT DEVICES TO SECURE SUPPORTING MEMBERS.
14. USE VANDAL PROOF DEVICES TO SECURE FIXTURES, TRIMMINGS AND FITTINGS TO DETER UNAUTHORIZED REMOVAL. PROVIDE CHROME PLATED BRASS WASHERS AND CAP NUTS FOR EXPOSED BOLT ENDS.
15. PROVIDE ESCUTCHEONS, THREADED OR HELD IN PLACE WITH THREADED PART OR SET SCREW, ON PIPING AND FIXTURE SUPPORTS PROTRUDING FROM WALL OR FLOOR, AND ON VISIBLE CONNECTIONS TO FIXTURES.
16. MAKE CONNECTION BETWEEN INTEGRAL TRAPPED FIXTURES AND DRAINAGE PIPING GAS AND WATERTIGHT, WITH CLOSET COUPLING OR FLANGE, CLOSET RING GASKET AND NON-CORROSIVE BOLTING MATERIALS.
17. USE SPACING DEVICES TO SUPPORT AND STABILIZE WATER PIPING.
18. PAINT NON-CORROSIVE FERROUS METAL SURFACES OF FIXTURES, INCLUDING BRACKETS, HANGERS, AND PLATES WITH PRIME COAT OF PAINT.
19. UPON COMPLETION OF WORK, REMOVE PROTECTIVE COVERS AND THOROUGHLY CLEAN SURFACES, TRAPS AND STRAINERS. CHECK ALL ITEMS FOR PROPER OPERATION.
20. ADJUST FLUSH VALVES TO PROVIDE MINIMUM FLOW CONSISTENT WITH CLEANING REQUIREMENTS OF FIXTURES. ADJUST SUPPLIES TO PROVIDE ADEQUATE FLOW WITHOUT SPLASHING, AND WITH FLOW RATE OF HOT AND COLD WATER EQUAL IN VELOCITY, EXCEPT AS OTHERWISE REQUIRED.
21. TEST PLUMBING SYSTEMS TO SATISFACTION OF BUILDING OFFICIAL. DO NOT CLOSE IN, CONCEAL, OR COVER UP ANY PLUMBING WORK UNTIL IT HAS BEEN TESTED, INSPECTED AND APPROVED.
22. FLUSH PIPING, PRIOR TO TESTING, TO REMOVE FOREIGN MATERIALS WHICH MAY HAVE ENTERED DURING COURSE OF INSTALLATION. CLEAN FILTERS AND STRAINERS AFTER FLUSHING.
23. ALL PIPING PENETRATIONS THRU NEW RATED WALLS SHALL BE SEALED WITH LISTED FIREPROOFING MATERIALS.
24. ITEMS NEEDING SAWCUTTING AND PATCHING SHALL BE COORDINATED BETWEEN TRADES. ONLY MAJOR PIECES ARE SHOWN ON DRAWINGS AND DO NOT INDICATE ALL LOCATIONS. PLUMBER SHALL BE RESPONSIBLE FOR CONCEALING ALL NEW WORK, UNLESS NOTED OTHERWISE.
25. SET AND CONNECT ALL FIXTURES WITH HOT AND COLD WATER, VENT AND DRAINAGE AS REQUIRED AND PROTECT FIXTURES UNTIL FINAL ACCEPTANCE AND TEST.
26. FIXTURES SHALL BE COMPLETE WITH CHROME PLATING ON EXPOSED IRON ON PIPE, TRAPS, ANCHOR BOLTS, HANGERS, STRAINERS, STOP VALVES AT EVERY FIXTURE AND OTHER INCIDENTAL ITEMS FURNISHED AS STANDARD.
27. ALL FIXTURES SHALL BE CAULKED TIGHT TO WALLS AND FINISHED SURFACES SO THAT NO VOIDS SHALL REMAIN.
28. FLOOR DRAINS SHALL RECEIVE WATER FROM TRAP PRIMER VALVES (TYP.) SEE DETAIL DRAWING.
29. ALL PLUMBING FIXTURE'S BACK PLATES AND ESCUTCHEONS RECTANGULAR IN NATURE SHALL BE INSTALLED FLUSH WITH THE WALL SURFACE. THE VERTICAL EDGE SHALL BE INSTALLED IN A VERTICAL POSITION PERPENDICULAR TO A HORIZONTAL PLANE AND THE HORIZONTAL EDGE SHALL BE INSTALLED IN A HORIZONTAL (LEVEL) POSITION.
30. PROVIDE ACCESSIBLE CLEANOUTS AT BASE OF EACH VERTICAL WASTE OR SOIL STACK AND STORM LEADERS; AT ENDS OF HORIZONTAL DRAINAGE PIPING RUNS AND AT EACH CHANGE IN DIRECTION GREATER THAN 45 DEGREES; NOT MORE THAN 50 FEET APART ON PIPING 4" AND SMALLER AND NOT MORE THAN 100 FEET APART ON PIPING LARGER THAN 4"; AT JUNCTION OF BUILDING DRAIN WITH BUILDING SEWER.
31. TERMINATE VENT PIPING AT LEAST 12" ABOVE ROOF SURFACE GENERALLY; AT LEAST 24" ABOVE ANY WINDOW, DOOR, OR OTHER VENTILATING OPENING WITHIN 10 FEET HORIZONTALLY OF SUCH VENT; AT LEAST 7 FEET ABOVE ROOF ADJACENT TO WALKWAYS AND OTHER HABITABLE AREAS.
32. LOCATE WALL HYDRANTS AND LAWN FAUCETS AT LEAST 18" ABOVE GRADE.
33. ALL EQUIPMENT SHOWN ON THESE DRAWINGS AND IN PROJECT SPECIFICATION IS BASED UPON SPECIFIED MANUFACTURERS. ANY MODIFICATION AND/OR SUBSTITUTION OF SAID EQUIPMENT IS SUBJECT TO COMPLETE COORDINATION OF ALL CONNECTIONS, SERVICES, OPENING SIZES AND OTHER CONSTRUCTION RELATED REQUIREMENTS BY THE TRADE CONTRACTOR PROVIDING THE EQUIPMENT.

PLUMBING FIXTURE SCHEDULE

SYMBOLS	DESCRIPTION	SOIL OR WASTE	VENT	COLD WATER	HOT WATER	REMARKS	SPECIFICATIONS
P-1	WATER CLOSET, FLOOR MOUNTED ACCESSIBLE	4"	2"	1"	-	SET AT REQUIRED ACCESSIBLE HEIGHT. SEE ARCHITECTURAL PLANS	AMERICAN STANDARD "MADERA" 3461001.020 WHITE VITREOUS CHINA, 1.28 GALLONS PER FLUSH, FLOOR MOUNTED, ELONGATED BOWL DESIGN, SIPHON JET FLUSHING WITH 1½" TOP SPUD. INSTALL WITH SLOAN 111-1.28E ROYAL FLUSHOMETER, OPEN FRONT SEAT WITH CHECK HINGE.
P-2	LAVATORY, WALL MOUNTED ACCESSIBLE	1-1/2"	1-1/2"	1/2"	1/2"	SET AT REQUIRED ACCESSIBLE HEIGHT. SEE ARCHITECTURAL PLANS	AMERICAN STANDARD "LUCERNE" 0355.012 WALL HUNG VITREOUS CHINA LAVATORY WITH 4" CENTERS, CONCEALED ARM SUPPORT, 17 GAUGE CAST BRASS P-TRAP WITH CLEANOUT PLUG AND GRID STRAINER. AMERICAN STANDARD 1340.225 4" CENTERSET METERING FAUCET. HOT AND COLD SELECTION. INSTALL WITH WATER CONSERVING 1.5 GPM PRESSURE-COMPENSATING VANDAL-RESISTANT AERATOR.
FS	FLOOR SINK	3"	2"	-	-		WADE MODEL W-9112 CAST IRON 8" SQUARE GRATE FLOOR SINK WITH 6" DEEP SUMP, PLASTIC DOME BOTTOM STRAINER, CLAMP DEVICE, AND SECURITY SCREWS, 3" PIPE SIZE.
KS	BREAK ROOM SINK	1-1/2"	1-1/2"	1/2"	1/2"		ELKAY LR2522 22" x 25" x 12" SINGLE COMPARTMENT COUNTER TOP STAINLESS STEEL SINK. 18GAGE, TYPE 302 3 HOLE PUNCH. LK-35 STRAINER WITH 1½" TAILPIECE AND 17GAGE CAST BRASS P-TRAP WITH CLEANOUT PLUG. SPEAKMAN COMMANDER SC-3084-LD SPOUT-5 GOOSENECK FAUCET WITH 4" WRISTBLADE HANDLES.

HOT WATER HEATER SCHEDULE

DESIGNATION	NO. REQUIRED	MANUFACTURER AND MODEL NUMBER	STORAGE WATER TEMPERATURE (DEG.F)	VOLUME/HEATER (GALS.)	RECOVERY/HEATER (GPH)	TEMPERATURE RISE (100 DEG. F PER GPH RISE)	ELECTRIC LOAD (K.W.)	VOLTS	PHASE	HERTZ	A.S.M.E. CONSTRUCTION	REMARKS	DRAWING NO.
HWH-1	1	BRADFORD WHITE MODEL NO. ULG2DV50H453N	140	48	83	43	13.2	208	1	60	X	(OR APPROVED EQUAL)	P-101

SUMMARY OF WORK:

1. REMOVE GAS DISTRIBUTION PIPING TO EXISTING ROOFTOP EQUIPMENT UNITS.
2. REPLACE GAS FIRED DOMESTIC HOT WATER HEATER.
3. REMOVE PLUMBING FIXTURES AND ASSOCIATED PIPING AND SUPPORTS BACK TO MAIN.
4. PROVIDE NEW PLUMBING FIXTURES, SUPPORTS, PIPING AND CONNECT TO EXISTING MAINS.
5. PROVIDE NEW GAS DISTRIBUTION PIPE TO GENERATOR AND DOAS.
6. COORDINATE GAS WORK WITH THE UTILITY.

No.	Date	Revisions
0	02-18-25	RFP SET

Drawn by WM
Checked by JH/ERF
Project No. 40034G
Scale AS SHOWN
Date 02/18/2025

Mechanical, Electrical & Structural Engineer:
GREENMAN PEDERSEN, INC
8 EXECUTIVE BOULEVARD
SUITE 202
SUFFERN, NY 10901

Civil Engineer:
ATZL, NASHER, & ZIGLER
234 North Main Street
New City, NY 10956

RENOVATION OF ROCKLAND GREEN ADMINISTRATIVE HEADQUARTERS AND CONSTRUCTION OF AN IMMERSIVE THEATRE EXPERIENCE
TOWN OF CLARKSTOWN
COUNTY OF ROCKLAND
10B MAIN STREET
NEW CITY, NY 10954

MICHAEL SHILALE ARCHITECTS, L.L.P.
140 Park Avenue New City, NY 10956 Tel 845-708-9200
www.shilale.com

© COPYRIGHT, MICHAEL SHILALE ARCHITECTS, ALL RIGHTS RESERVED.

Drawing Title
PLUMBING GENERAL NOTES

Drawing No.
P001

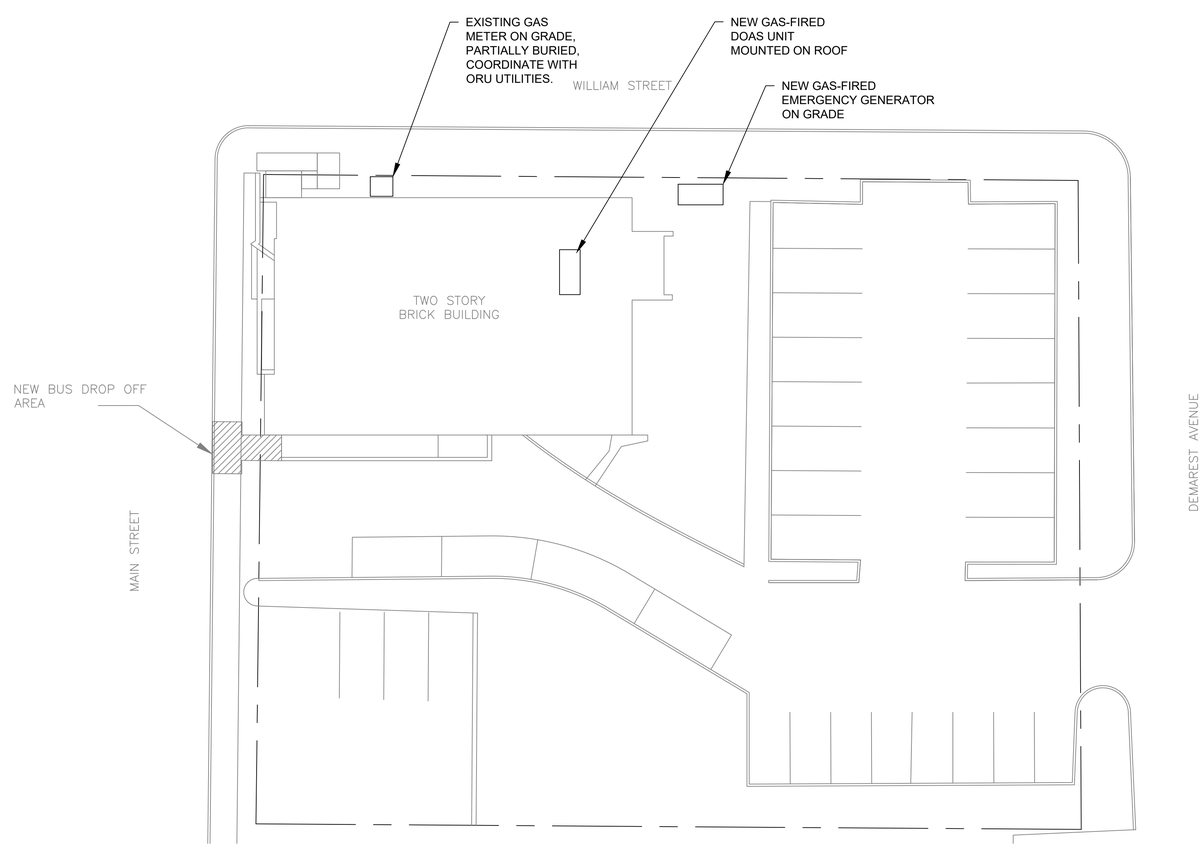

1 P-002 PLUMBING SITE PLAN

SCALE: 1/16" = 1'-0"

PLAN NORTH

GAS LOAD SCHEDULE

LOAD ITEM	LOCATION	USAGE (CFH)	PRESS (W.C.)	STATUS
RTU	ROOF	180	MIN. 4.0", MAX 13"	REMOVE
RTU	ROOF	80	MIN. 4.5", MAX 11"	REMOVE
RTU	ROOF	80	MIN. 4.5", MAX 11"	REMOVE
RTU	ROOF	72	MIN. 4.0", MAX 13"	REMOVE
RTU	ROOF	180	MIN. 4.0", MAX 13"	REMOVE
WATER HEATER	MECHANICAL RM	40	MIN. 5.0", MAX 14"	REPLACE
BOILER	MECHANICAL RM	130	MIN. 4.5", MAX 14"	EXISTING TO REMAIN
DOAS	ROOF	125	MIN. 4.5", MAX 14"	NEW
GENERATOR	GRADE	1915	MIN. 6.0", MAX 13"	NEW
TOTAL		2210		

0 1/2 1
IF THIS BAR DOES NOT MEASURE 1", THEN DRAWING IS NOT TO FULL SCALE

No.	Date	Revisions
0	02-18-25	RFP SET

Drawn by WM
Checked by JH/ERF
Project No. 40034G
Scale AS SHOWN
Date 02/18/2025

Mechanical, Electrical & Structural Engineer: GREENMAN PEDERSEN, INC
2 EXECUTIVE BOULEVARD
SUITE 202
SUFFERN, NY 10901

Civil Engineer: ATZL, NASHER, & ZIGLER
234 North Main Street
New City, NY 10956

RENOVATION OF ROCKLAND GREEN ADMINISTRATIVE HEADQUARTERS AND CONSTRUCTION OF AN IMMERSIVE THEATRE EXPERIENCE

172 MAIN STREET
NANUET, NY 10954

TOWN OF CLARKSTOWN
COUNTY OF ROCKLAND

MSA
MICHAEL SHILALE ARCHITECTS, L.L.P.
140 Park Avenue New City, NY 10956 Tel 845-709-9200
www.shilale.com

© COPYRIGHT, MICHAEL SHILALE ARCHITECTS, ALL RIGHTS RESERVED.

Drawing Title
PLUMBING SITE PLAN

Drawing No.
P002

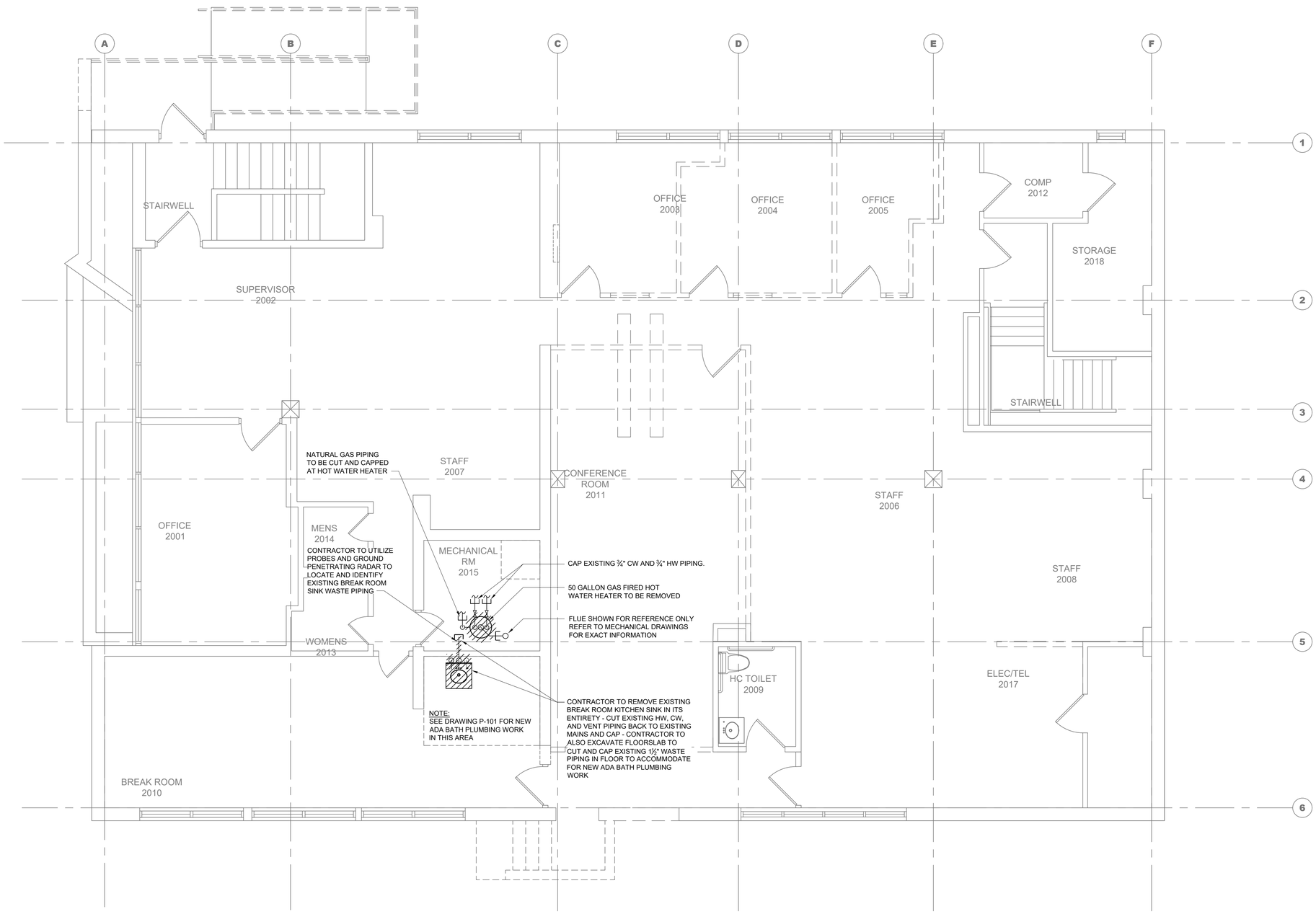

1 PD-101 PLUMBING FIRST FLOOR - DEMOLITION

SCALE: 1/4" = 1'-0"

PLAN NORTH

0 1/2 1

IF THIS BAR DOES NOT MEASURE 1", THEN DRAWING IS NOT TO FULL SCALE

No.	Date	Revisions
0	02-18-25	RFP SET

Drawn by WM

Checked by JH/ERF

Project No. 40034G

Scale AS SHOWN

Date 02/18/2025

GREENMAN PEDERSEN, INC
2 EXECUTIVE BOULEVARD
SUFFERN, NY 10901

Mechanical, Electrical & Structural Engineer:

ATZL, NASHER, & ZIGLER
234 North Main Street
New City, NY 10956

Civil Engineer:

RENOVATION OF ROCKLAND GREEN ADMINISTRATIVE HEADQUARTERS AND CONSTRUCTION OF AN IMMERSIVE THEATRE EXPERIENCE

172 MAIN STREET
NYACK, NY 10994

TOWN OF CLARKSTOWN
COUNTY OF ROCKLAND

MICHAEL SHILALE ARCHITECTS, L.L.P.
140 Park Avenue New City, NY 10956 Tel 845-708-9200
www.shilale.com

© COPYRIGHT, MICHAEL SHILALE ARCHITECTS, ALL RIGHTS RESERVED.

Drawing Title
PLUMBING FIRST FLOOR DEMOLITION

Drawing No.
PD101

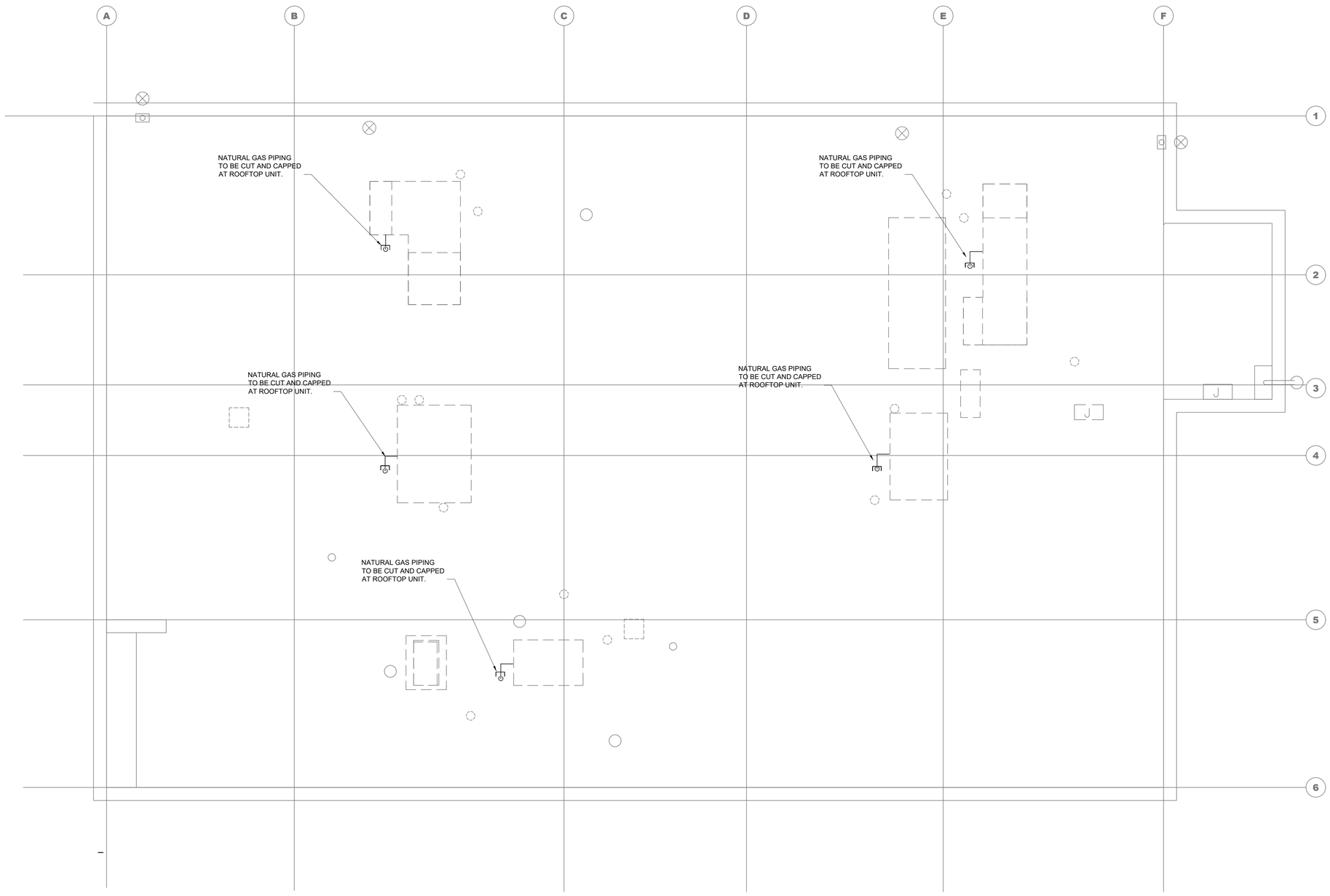

1 PD-103 PLUMBING ROOF PLAN - DEMOLITION

SCALE: 1/4" = 1'-0"

PLAN NORTH

0 1/2 1

IF THIS BAR DOES NOT MEASURE 1", THEN DRAWING IS NOT TO FULL SCALE

No.	Date	Revisions
0	02-18-25	RFP SET

Drawn by WM/JM

Checked by ERF

Project No. 40034G

Scale AS SHOWN

Date 02/18/2025

Mechanical, Electrical & Structural Engineer:
GREENMAN PEDERSEN, INC
2 EXECUTIVE BOULEVARD
SUITE 202
SUFFERN, NY 10901

Civil Engineer:
ATZL, NASHER, & ZIGLER
234 North Main Street
New City, NY 10956

RENOVATION OF ROCKLAND GREEN ADMINISTRATIVE HEADQUARTERS AND CONSTRUCTION OF AN IMMERSIVE THEATRE EXPERIENCE

TOWN OF CLARKSTOWN
COUNTY OF ROCKLAND

178 MAIN STREET
NANUET, NY 10954

MICHAEL SHILALE ARCHITECTS, L.L.P.
140 Park Avenue New City, NY 10956 Tel 845-708-9200
www.shilale.com

© COPYRIGHT, MICHAEL SHILALE ARCHITECTS, ALL RIGHTS RESERVED.

Drawing Title
PLUMBING ROOF PLAN - DEMO

Drawing No.
PD103

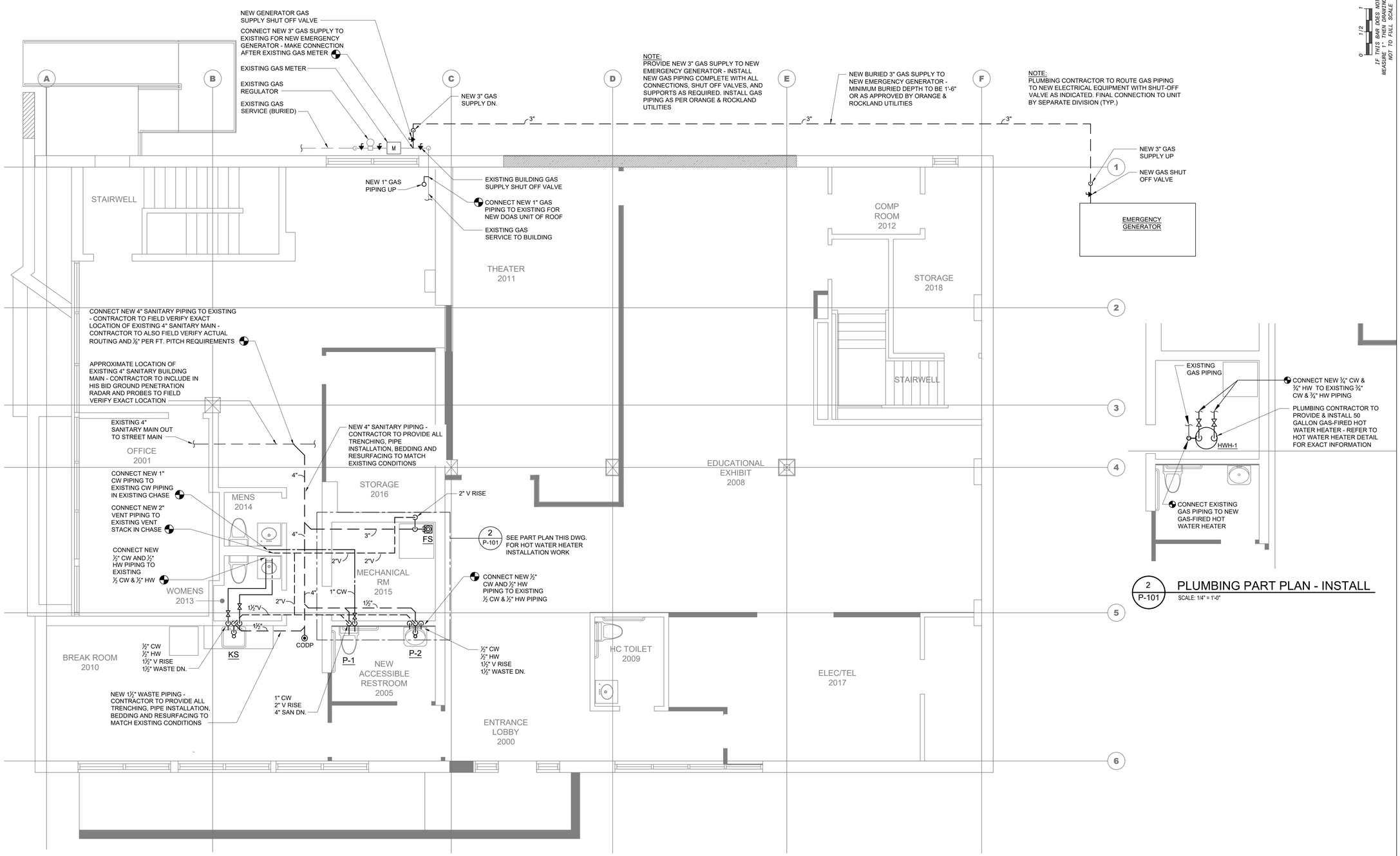

1 P-101 PLUMBING FIRST FLOOR PLAN - INSTALL

SCALE: 1/4" = 1'-0"

2 P-101 PLUMBING PART PLAN - INSTALL

SCALE: 1/4" = 1'-0"

IF THIS BAR DOES NOT MEASURE 1", THEN DRAWING IS NOT TO FULL SCALE

0 1/2 1

No.	Date	Revisions
0	02-18-25	RFP SET

Drawn by WM
Checked by JH/ERF
Project No. 40034G
Scale AS SHOWN
Date 02/18/2025

GREENMAN PEDERSEN, INC
8 EXECUTIVE BOULEVARD
SUFFERN, NY 10901

Mechanical, Electrical & Structural Engineer:

ATZL, NASHER, & ZIGLER
234 North Main Street
New City, NY 10956

Civil Engineer:

RENOVATION OF ROCKLAND GREEN ADMINISTRATIVE HEADQUARTERS AND CONSTRUCTION OF AN IMMERSIVE THEATRE EXPERIENCE

172 MAIN STREET
HAVERSTRAW, NY 10927

TOWN OF CLARKSTOWN
COUNTY OF ROCKLAND

MICHAEL SHILALE ARCHITECTS, L.L.P.
140 Park Avenue New City, NY 10956 Tel 845-708-9200
www.shilale.com

© COPYRIGHT, MICHAEL SHILALE ARCHITECTS, ALL RIGHTS RESERVED.

Drawing Title
PLUMBING FIRST FLOOR INSTALLATION PLAN

Drawing No.
P101

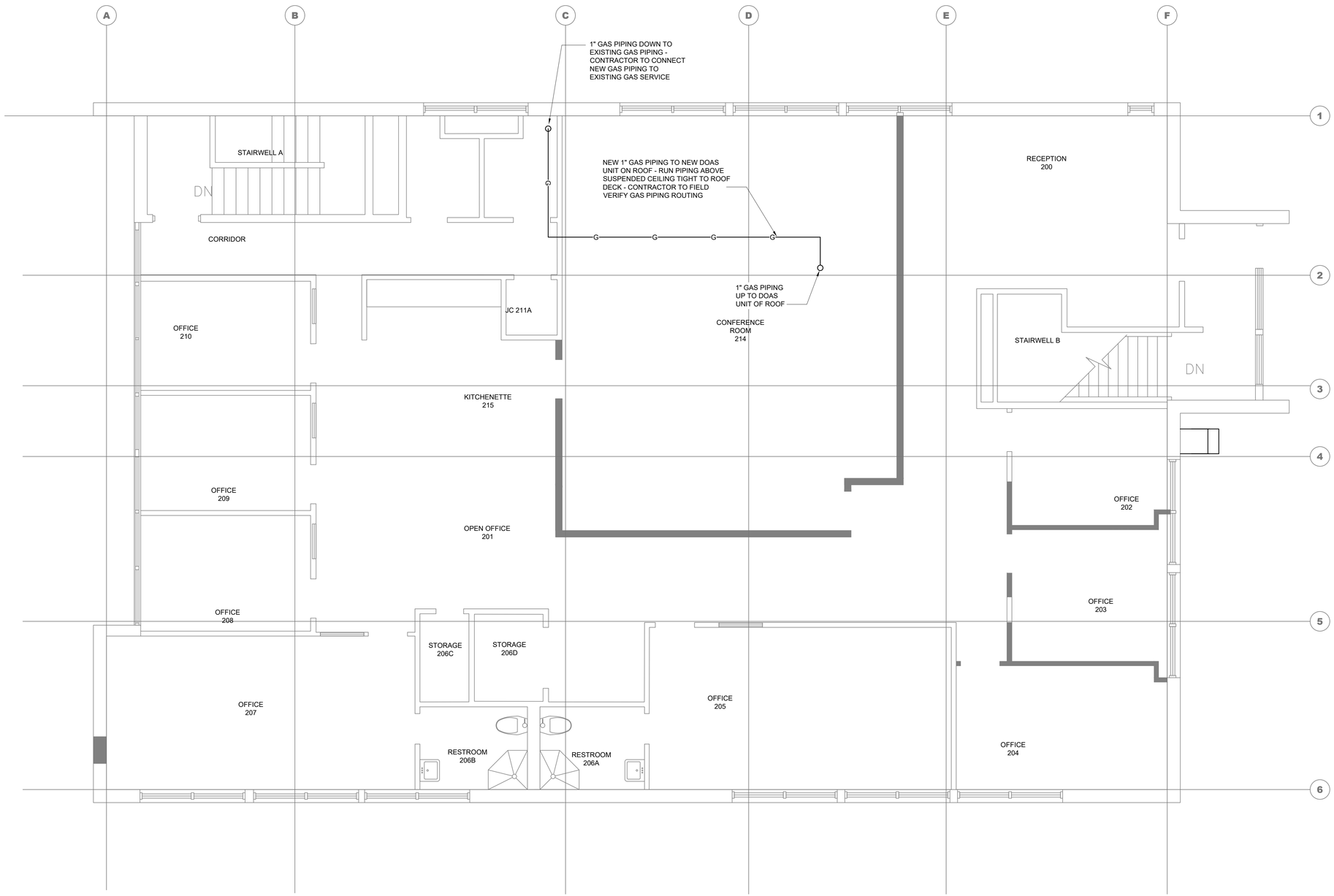

1 / P-102 PLUMBING SECOND FLOOR PLAN - INSTALL

SCALE: 1/4" = 1'-0"

PLAN NORTH

0 1/2 1
IF THIS BAR DOES NOT MEASURE 1", THEN DRAWING IS NOT TO FULL SCALE

No.	Date	Revisions
0	02-18-25	RFP SET

Drawn by WM
Checked by JH/ERF
Project No. 40034G
Scale AS SHOWN
Date 02/18/2025

GREENMAN PEDERSEN, INC
8 EXECUTIVE BOULEVARD
SUFFERN, NY 10901

ATZL, NASHER, & ZIGLER
234 North Main Street
New City, NY 10956

Mechanical, Electrical & Structural Engineer:

Civil Engineer:

RENOVATION OF ROCKLAND GREEN ADMINISTRATIVE HEADQUARTERS AND CONSTRUCTION OF AN IMMERSIVE THEATRE EXPERIENCE

TOWN OF CLARKSTOWN
COUNTY OF ROCKLAND

172 MAIN STREET
NANUET, NY 10954

MICHAEL SHILALE ARCHITECTS, L.L.P.
140 Park Avenue New City, NY 10956 Tel 845-708-9200
www.shilale.com

© COPYRIGHT, MICHAEL SHILALE ARCHITECTS, ALL RIGHTS RESERVED.

Drawing Title
PLUMBING SECOND FLOOR - INSTALLATION

Drawing No.
P102

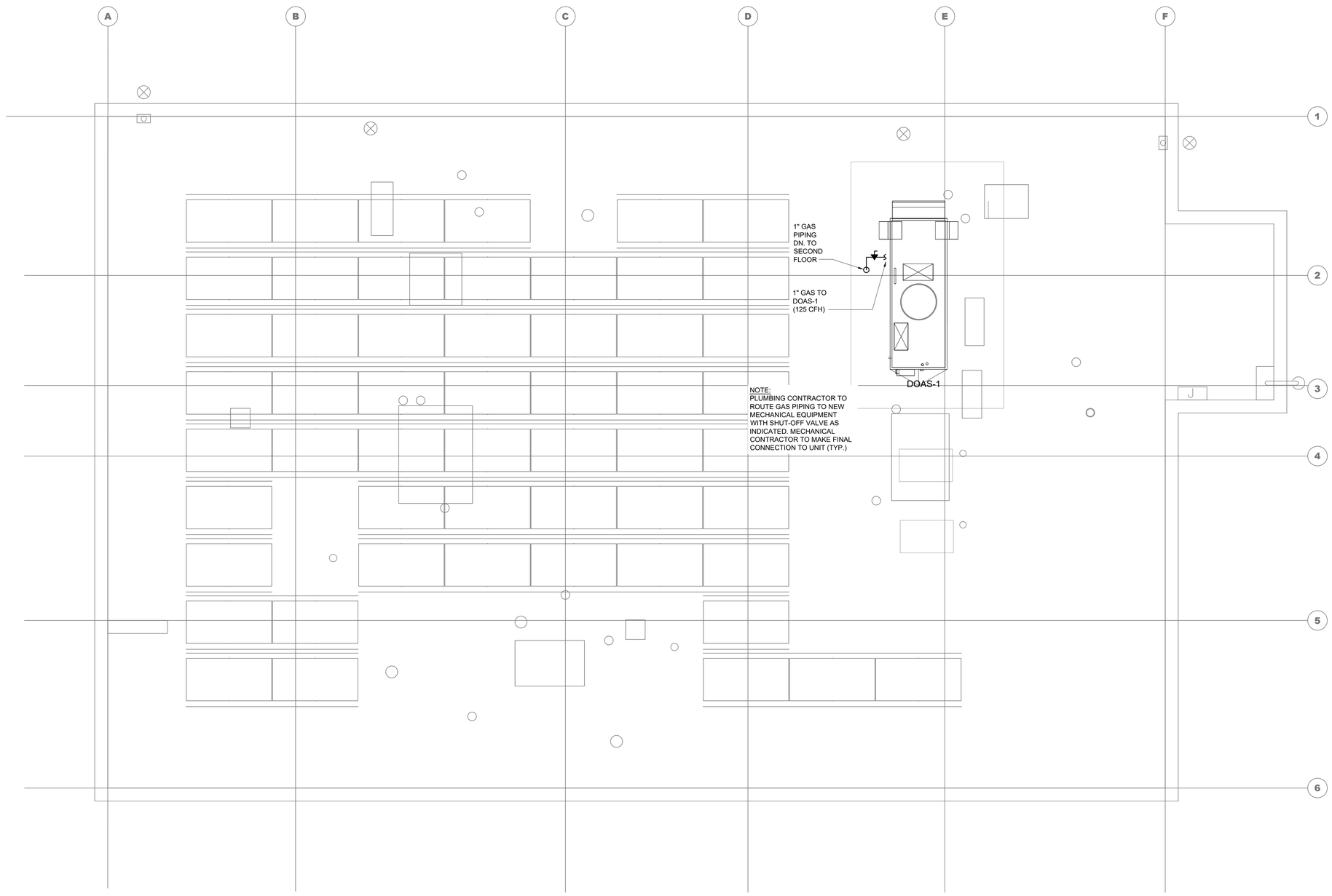

1 / P-103 PLUMBING ROOF PLAN - INSTALL

SCALE: 1/4" = 1'-0"

PLAN NORTH

0 1/2 1

IF THIS BAR DOES NOT MEASURE 1", THEN DRAWING IS NOT TO FULL SCALE

No.	Date	Revisions
0	02-18-25	RFP SET

Drawn by WM

Checked by JH/ERF

Project No. 40034G

Scale AS SHOWN

Date 02/18/2025

GREENMAN PEDERSEN, INC
2 EXECUTIVE BOULEVARD
SUITE 202
SUFFERN, NY 10901

Mechanical, Electrical & Structural Engineer:

ATZL, NASHER, & ZIGLER
234 North Main Street
New City, NY 10956

Civil Engineer:

RENOVATION OF ROCKLAND GREEN ADMINISTRATIVE HEADQUARTERS AND CONSTRUCTION OF AN IMMERSIVE THEATRE EXPERIENCE

TOWN OF CLARKSTOWN
COUNTY OF ROCKLAND

178 MAIN STREET
NANUET, NY 10954

MICHAEL SHILALE ARCHITECTS, L.L.P.
140 Park Avenue New City, NY 10956 Tel 845-708-9200
www.shilale.com

© COPYRIGHT, MICHAEL SHILALE ARCHITECTS, ALL RIGHTS RESERVED.

Drawing Title
PLUMBING ROOF PLAN - INSTALLATION

Drawing No.
P103

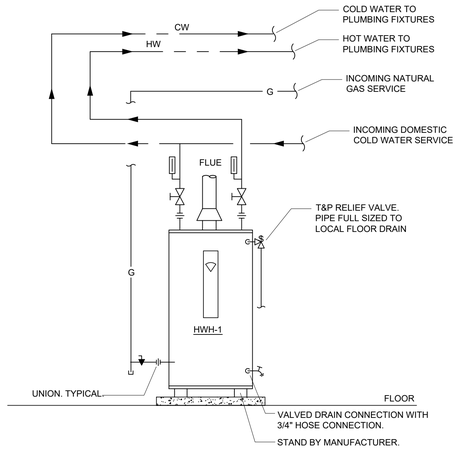

1 GAS-FIRED HOT WATER HEATER DETAIL
SCALE: N.T.S.

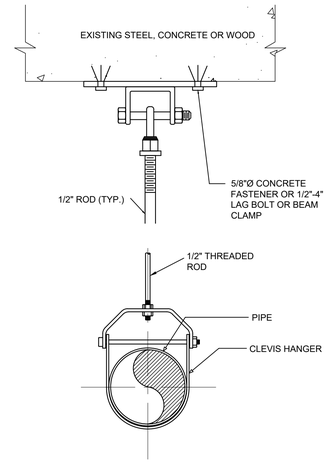

2 CLEVIS HANGER
SCALE: N.T.S.

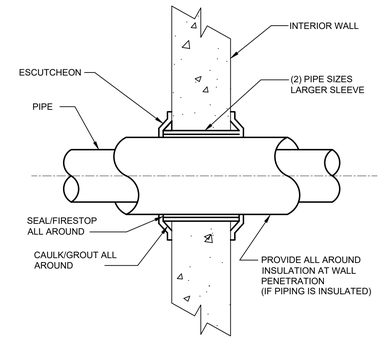

3 WALL PENETRATION (TYP.)
SCALE: N.T.S.

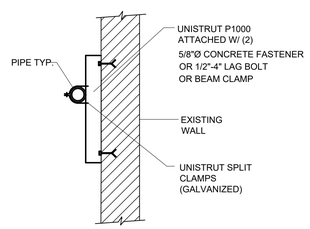

4 WALL SUPPORT
SCALE: N.T.S.

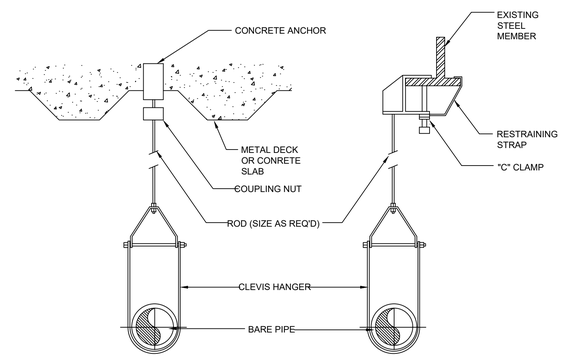

NOTE:
CLEVIS HANGERS REQUIRED ON PIPING LARGER THAN 1", GENERAL PURPOSE HANGERS MAY BE USED ON 1" PIPING ONLY.

5 PIPE HANGER DETAIL
SCALE: N.T.S.

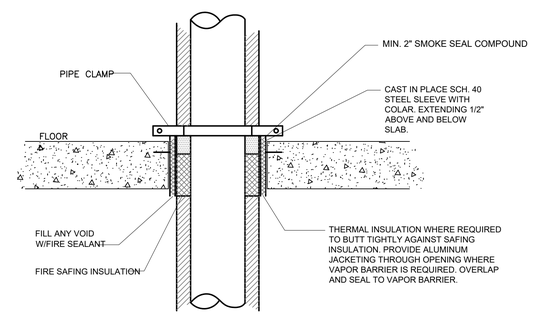

NOTE:
SLEEVES TO BE SIZED AS REQUIRED FOR OVERALL PIPE DIAMETER. (INCLUDING INSULATION, WHERE APPLICABLE)

6 FLOOR PENETRATION DETAIL
SCALE: N.T.S.

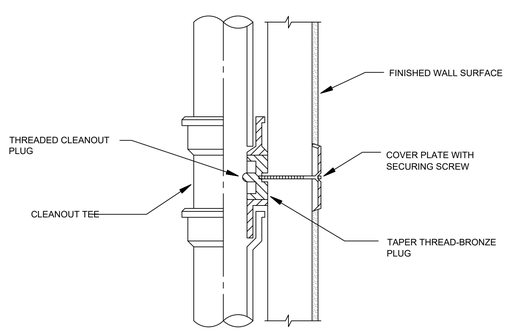

7 WALL CLEANOUT DETAIL
SCALE: N.T.S.

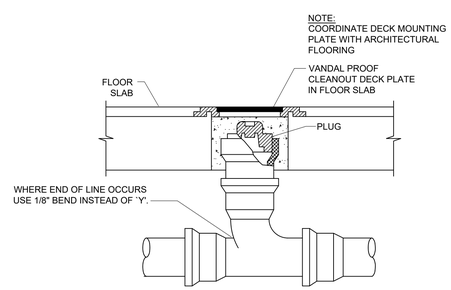

NOTE:
COORDINATE DECK MOUNTING PLATE WITH ARCHITECTURAL FLOORING

8 FLOOR CLEAN-OUT DETAIL
SCALE: N.T.S.

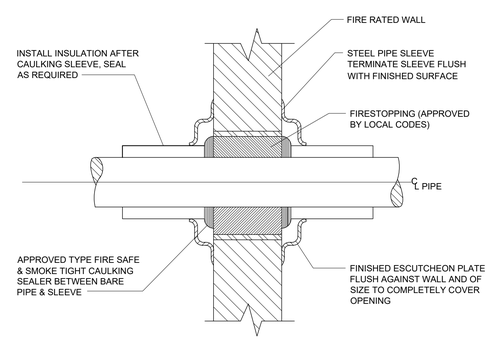

9 PIPE SLEEVE FIRE RATED WALL DETAIL
SCALE: N.T.S.

No.	Date	Revisions
0	02-18-25	RFP SET

Drawn by WM
Checked by JH/ERF
Project No. 400346
Scale AS SHOWN
Date 02/18/2025

GREENMAN PEDERSEN, INC
8 EXECUTIVE BOULEVARD
SUITE 202
SUFFERN, NY 10901

Mechanical, Electrical & Structural Engineer:

ATZL, NASHER, & ZIGLER
234 North Main Street
New City, NY 10956

Civil Engineer:

RENOVATION OF ROCKLAND GREEN ADMINISTRATIVE HEADQUARTERS AND CONSTRUCTION OF AN IMMERSIVE THEATRE EXPERIENCE

TOWN OF CLARKSTOWN
COUNTY OF ROCKLAND

175 MAIN STREET
NANUET, NY 10954

MICHAEL SHILALE ARCHITECTS, L.L.P.
140 Park Avenue New City, NY 10956 Tel 845-708-9200
www.shilale.com

© COPYRIGHT, MICHAEL SHILALE ARCHITECTS, ALL RIGHTS RESERVED.

Drawing Title
DETAILS

Drawing No.
P501

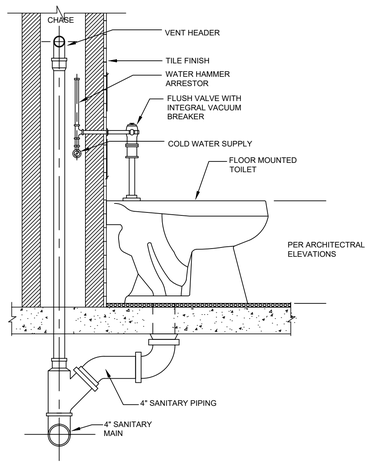

1 FLOOR MTD. WATER CLOSET DETAIL (TYP.)
SCALE: N.T.S.

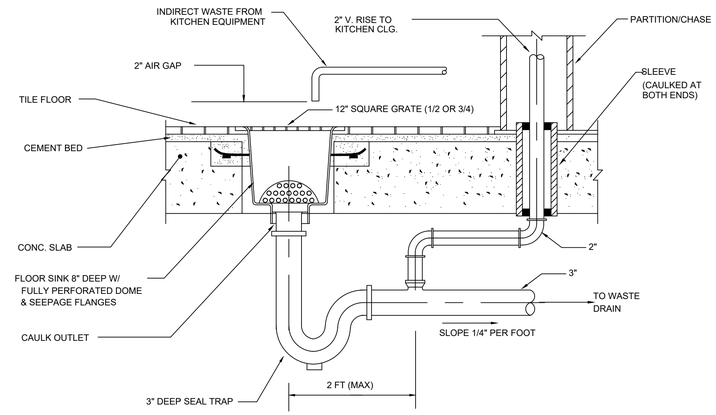

2 FLOOR SINK DETAIL
SCALE: N.T.S.

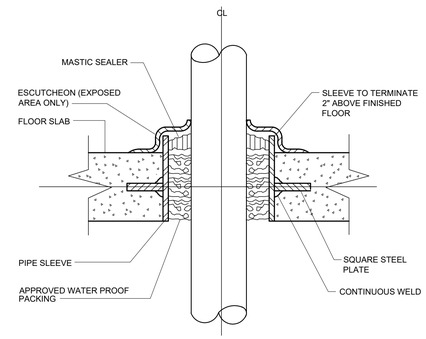

3 PIPE SLEEVE THRU WATERPROOF SLAB
SCALE: N.T.S.

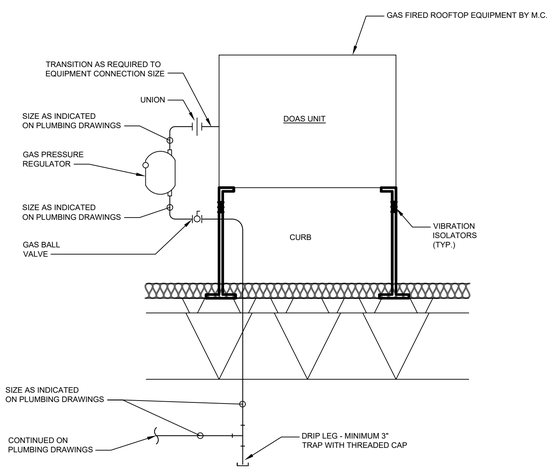

4 FLOOR MTD. WATER CLOSET DETAIL (TYP.)
SCALE: N.T.S.

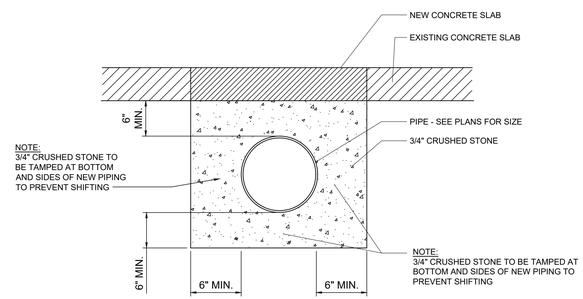

5 PIPE TRENCH DETAIL
SCALE: N.T.S.

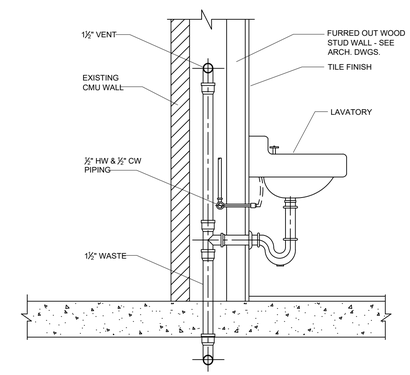

6 LAVATORY PIPING DETAIL (TYP.)
SCALE: N.T.S.

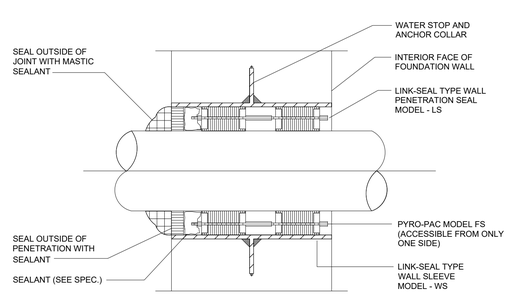

7 PIPE SLEEVE THRU EXTERIOR FOUNDATION WALL DETAIL
SCALE: N.T.S.

No.	Date	Revisions
0	02-18-25	RFP SET

Drawn by WM
Checked by JH/ERF
Project No. 40034G
Scale AS SHOWN
Date 02/18/2025

GREENMAN PEDERSEN, INC
2 EXECUTIVE BOULEVARD
SUFFERN, NY 10901
Mechanical, Electrical & Structural Engineer:

ATZL, NASHER, & ZIGLER
234 North Main Street
New City, NY 10956
Civil Engineer:

RENOVATION OF ROCKLAND GREEN ADMINISTRATIVE HEADQUARTERS AND CONSTRUCTION OF AN IMMERSIVE THEATRE EXPERIENCE
TOWN OF CLARKSTOWN
COUNTY OF ROCKLAND
175 MAIN STREET
NANUET, NY 10954

MICHAEL SHILALE ARCHITECTS, L.L.P.
140 Park Avenue New City, NY 10956 Tel 845-708-9200
www.shilale.com

© COPYRIGHT, MICHAEL SHILALE ARCHITECTS, ALL RIGHTS RESERVED.

Drawing Title
DETAILS

Drawing No.
P502

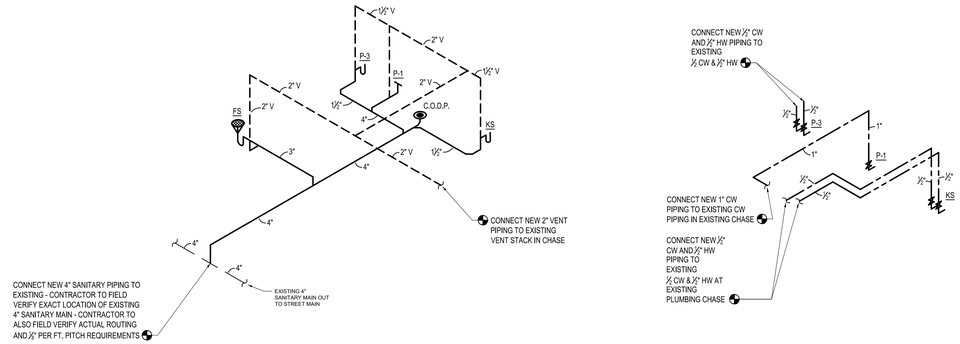

1 PLUMBING SANITARY & DOMESTIC WATER RISER DIAGRAMS

SCALE: N.T.S.

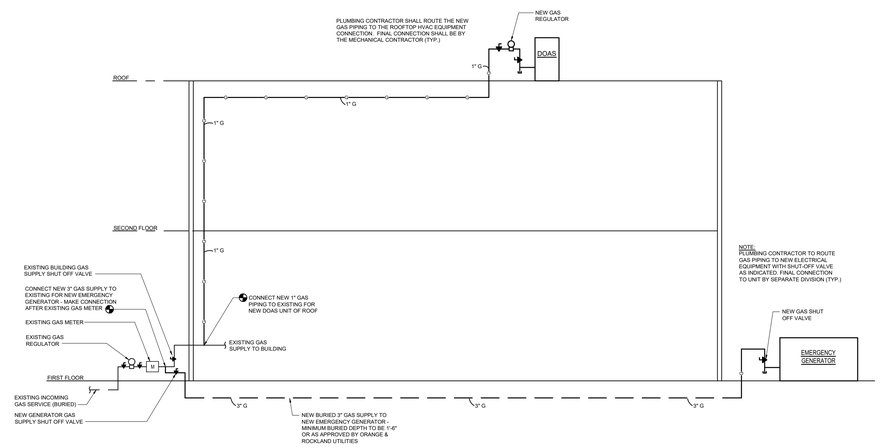

2 PLUMBING GAS RISER DIAGRAM

SCALE: N.T.S.

No.	Date	Revisions
0	02-18-25	RFP SET

Drawn by WM
Checked by JH/ERF
Project No. 40034G
Scale AS SHOWN
Date 02/18/2025

Mechanical, Electrical & Structural Engineer: GREENMAN PEDERSEN, INC
2 EXECUTIVE BOULEVARD
SUITE 202
SUFFERN, NY 10901

Civil Engineer: ATZL, NASHER, & ZIGLER
234 North Main Street
New City, NY 10956

RENOVATION OF ROCKLAND GREEN ADMINISTRATIVE HEADQUARTERS AND CONSTRUCTION OF AN IMMERSIVE THEATRE EXPERIENCE

172 MAIN STREET
NANUET, NY 10954

TOWN OF CLARKSTOWN
COUNTY OF ROCKLAND

MICHAEL SHILALE ARCHITECTS, L.L.P.
140 Park Avenue New City, NY 10956 Tel 845-708-9200
www.shilale.com

© COPYRIGHT, MICHAEL SHILALE ARCHITECTS, ALL RIGHTS RESERVED.

Drawing Title
PLUMBING RISER DIAGRAMS

Drawing No.
P503

ELECTRICAL GENERAL NOTES:

1. ALL WORK SHALL BE PERFORMED IN STRICT ACCORDANCE WITH THE REQUIREMENTS OF THE 2020 NATIONAL ELECTRICAL CODE (NEC), STATE OF NEW YORK UNIFORM CONSTRUCTION CODES, THE 2020 INTERNATIONAL BUILDING CODE, 2018 IECC, AND ALL GOVERNING LOCAL CODES, LAWS, AND REGULATIONS.
2. PROVIDE A COMPLETE OPERABLE SYSTEM IN A NEAT AND SKILLFUL MANNER. OUTLINE DESCRIPTION AND EQUIPMENT; DO NOT LIMIT CONTRACTOR'S LIABILITY FOR THE INSTALLATION OF A COMPLETE OPERABLE SYSTEM.
3. VISIT THE SITE AND BECOME FAMILIAR WITH ALL EXISTING CONDITIONS THAT MAY AFFECT THE WORK. NO ADDITIONAL COMPENSATION WILL BE DUE FOR FAILURE TO DO SO.
4. CONTRACTOR TO BE RESPONSIBLE FOR REVIEWING THE FULL SET OF BID DOCUMENTS TO BE AWARE OF THE TOTAL SCOPE PRIOR TO SUBMITTING BID. ALL WORK SHOWN ON THE DRAWINGS NOT SPECIFICALLY CALLED OUT AS EXISTING SHALL BE CONSIDERED WORK TO BE PERFORMED UNDER THIS CONTRACT.
5. BIDDERS, BEFORE SUBMITTING A PROPOSAL, SHALL VISIT AND CAREFULLY EXAMINE THE SITE TO BECOME FAMILIAR WITH THE EXISTING CONDITIONS AND WITH THE DIFFICULTIES THAT WILL ATTEND THE EXECUTION OF THIS WORK. SUBMISSION OF A PROPOSAL WILL BE CONSTRUED AS EVIDENCE THAT SUCH EXAMINATION HAS BEEN MADE. LATER CLAIMS WILL NOT BE RECOGNIZED FOR EXTRA LABOR, EQUIPMENT OR MATERIALS REQUIRED BECAUSE OF DIFFICULTIES ENCOUNTERED WITHOUT FIRST SECURING SUFFICIENT PROOF IN SUPPORT OF EVIDENCE OF SUCH EXTRA CLAIMS. IT IS THE CONTRACTORS RESPONSIBILITY TO IDENTIFY AREAS WHERE INSUFFICIENT INFORMATION IS AVAILABLE, OR WHERE IT CAN BE DOCUMENTED WITH PHOTOS, AND OTHER SUPPORTING INFORMATION THAT SUCH EVIDENCE WAS BEYOND THE MEANS OF THE CONTRACTOR AS JUDGED BY THE OWNER. FINAL JUDGEMENT FOR SUCH CLAIMS SHALL BE BY THE OWNER. NO ALLOWANCE WILL SUBSEQUENTLY BE MADE TO THE CONTRACTOR BY REASON OF ANY ERROR DUE TO THE CONTRACTOR'S NEGLECT TO COMPLY WITH THIS REQUIREMENT. REPORT ANY DISCREPANCIES BETWEEN DRAWINGS AND FIELD CONDITIONS TO THE ENGINEER, ARCHITECT AND OWNER.
6. BEFORE COMMENCING WORK, THE CONTRACTOR SHALL FILE ALL REQUIRED CERTIFICATES OF INSURANCE WITH THE BUILDING DEPARTMENT. OBTAIN ALL REQUIRED PERMITS AND PAY ALL FEES REQUIRED.
7. UPON COMPLETION OF ALL ELECTRICAL WORK, ELECTRICAL CONTRACTOR SHALL ADJUST AND TEST ALL CIRCUITS, DEVICES AND ANY OTHER ELECTRICAL ITEMS INSTALLED. ANY DEFECTIVE ITEMS SHALL BE IMMEDIATELY REPAIRED OR REPLACED WITH NEW EQUIPMENT OR MATERIALS AND THAT PORTION OF THE SYSTEM SHALL BE RETESTED. ALL SUCH REMEDIAL WORK SHALL BE PROVIDED AT NO ADDITIONAL COST TO THE OWNER.
8. ALL NOTATIONS OF "SCALE" ARE INTENDED AS APPROXIMATIONS. THE CONTRACTOR SHALL BE RESPONSIBLE TO ASCERTAIN THE EXACT DIMENSIONS IN FIELD.
9. ELECTRICAL DRAWINGS ARE DIAGRAMMATIC, SIZES AND LOCATION OF EQUIPMENT AND WIRING ARE SHOWN TO SCALE WHERE POSSIBLE, BUT MAY BE DISTORTED FOR CLARITY ON THE DRAWINGS. LOCATIONS SHOWN ARE TO INDICATE INTENT AND SHALL BE FIELD VERIFIED.
10. UNLESS OTHERWISE NOTED, ELECTRICAL EQUIPMENT INCLUDING BUT NOT LIMITED TO PULL BOXES, JUNCTION BOXES, LOW VOLTAGE SYSTEMS DEVICES, ETC. WHERE INDICATED ON DRAWINGS, SHALL BE CONSIDERED SHOWN AT THEIR APPROXIMATE LOCATION. THE CONTRACTOR SHALL LOCATE THESE ITEMS AS FIELD CONDITIONS DICTATE AND AS APPROVED BY THE ARCHITECT OR OWNER.
11. ALL CONDUIT RUNS, WHEN SHOWN ON THE DRAWINGS, ARE SHOWN DIAGRAMMATICALLY TO OUTLINE THE GENERAL ROUTING OF MAJOR FEEDERS AND BRANCH WIRING. IT IS NOT WITHIN THE SCOPE OF THESE DRAWINGS TO SHOW ALL NECESSARY BENDS, OFFSETS, PULL BOXES AND OBSTRUCTIONS. IT SHALL BE THE RESPONSIBILITY OF THE CONTRACTOR TO INSTALL HIS WORK TO CONFORM TO THE REQUIREMENTS OF THE NATIONAL ELECTRICAL CODE.
12. ADDITIONAL PULL AND JUNCTION BOXES NOT SHOWN ON DRAWINGS SHALL BE PROVIDED WHERE REQUIRED BY APPLICABLE CODE REQUIREMENTS OR WHERE CALLED FOR BY FIELD CONDITIONS. PULL AND JUNCTION BOXES SHALL BE SURFACE MOUNTED THROUGHOUT.
13. CONDUIT RUNS SHALL CLEAR ALL ARCHITECTURAL FEATURES (DOORS, WINDOWS, ETC) AND STRUCTURAL MEMBERS. CONDUIT INSTALLATION SHALL ALSO BE MADE TO AVOID OBSTRUCTION AND CLEAR ACCESS WITH PIPES, DUCTS, OR OTHER EQUIPMENT CORRESPONDING TO OTHER TRADES, INCLUDING BUT NOT LIMITED TO MECHANICAL, ELECTRICAL, PLUMBING AND FIRE PROTECTION. SHALL ANY OF THESE ELEMENTS PREVENT THE INSTALLATION OF RACEWAY AS DELINEATED ON THE CONTRACT DOCUMENTS, DEVIATION MUST BE APPROVED BY THE ENGINEER PRIOR TO INSTALLATION. ANY VARIATION DUE TO FIELD CONDITIONS SHALL NOT REPRESENT AN ADDITIONAL COST TO OWNER.
14. ALL CONDUITS BEING INSTALLED AS PART OF THIS PROJECT ARE EXPOSED EXCEPT IN AREAS WITH ACCESSIBLE HUNG CEILING. WHEN EXPOSED, CONDUIT AND BOXES SHALL BE PAINTED. PAINTING SHALL CONSIST OF A PRIME COAT AND A FINISH COAT, COLOR AS SELECTED BY ARCHITECT OR TO MATCH SURROUNDING SURFACES. FACTORY PAINTING WILL BE ACCEPTED AS A PRIME COAT. CONDUIT SHALL BE RUN ABOVE HUNG CEILING WHERE AVAILABLE.
25. MINIMUM SIZE OF CONDUITS SHALL BE 3/4", UNLESS OTHERWISE NOTED. PROVIDE 2#12, 1#12G IN 3/4" CONDUIT TO 20A CIRCUIT BREAKERS IN PANELS INDICATED, UNLESS OTHERWISE NOTED.
26. PROVIDE OUTLET BOXES AND ENCLOSURES APPROPRIATE FOR THE PURPOSE AT ALL LOCATIONS WHERE THE DRAWINGS REQUIRE THE INSTALLATION OF ELECTRICAL DEVICES OR ELECTRICAL EQUIPMENT.
27. ALL OPENINGS BETWEEN FLOORS, THROUGH RATED FIRE AND SMOKE WALLS, CREATED BY THE CONTRACTOR FOR CABLE OR CONDUIT PASS THROUGH SHALL BE SEALED WITH A FIRE STOPPING MATERIAL. FIRE STOPPING MATERIAL AND ITS APPLICATION SHALL BE ACCOMPLISHED IN SUCH A MANNER THAT IS ACCEPTABLE TO THE LOCAL FIRE AND BUILDING AUTHORITIES HAVING JURISDICTION OVER THIS WORK. ANY OPENINGS CREATED BY OR FOR THE CONTRACTOR AND LEFT UNUSED SHALL ALSO BE SEALED AS PART OF THIS WORK.
28. ALL EXPOSED NONCURRENT-CARRYING METAL PARTS OF ELECTRICAL EQUIPMENT AND RACEWAYS SHALL BE GROUNDED. A SEPARATE GROUND CONDUCTOR SHALL BE RUN IN ALL CONDUITS IN ALL CASES. ENSURE CONTINUITY OF THE GROUNDING CIRCUIT FROM THE SUPPLYING PANELBOARD GROUNDING BUS TO THE LOAD GROUND TERMINAL. THE RESISTANCE FROM THE SERVICE EQUIPMENT GROUND BUS TO ANY LOAD GROUND TERMINAL SHALL NOT EXCEED 1 OHM.
29. NO LOW VOLTAGE WIRING SHALL BE PERMITTED IN THE SAME RACEWAY AS POWER WIRING.
30. ALL ELECTRICAL EQUIPMENT AND ACCESSORIES INSTALLED OUTSIDE OR EXPOSED TO WEATHER SHALL HAVE NEMA 3R ENCLOSURES AND SHALL BE TIGHTLY GASKETED FOR A COMPLETE RAINTIGHT INSTALLATION.
31. ALL EQUIPMENT SHALL HAVE COPPER CURRENT CARRYING PARTS INCLUDING GROUND BUS AND TERMINALS.
32. REMOVE ALL DEBRIS RESULTING FROM REMOVAL AND/OR INSTALLATION OF ELECTRICAL WORK FROM THE PREMISES.
33. UNLESS OTHERWISE NOTED, "INSTALL" MEANS TO BE PROVIDED AND INSTALLED BY THIS CONTRACTOR.
34. CONTRACTOR TO BE RESPONSIBLE FOR ALL RESTORATION, SEALING, WATERPROOFING, PENETRATIONS, CORE DRILLING, CUTTING, PATCHING, AND PAINTING FOR THE COMPLETE CONTRACT WORK INDICATED. ALL RESTORATION WORK PERFORMED BY CONTRACTOR SHALL RESTORE DISTURBED SURFACES TO MATCH ALL SURROUNDING CONSTRUCTION.
35. IF DURING THE COURSE OF THE PROJECT, ASBESTOS OR OTHER HAZARDOUS MATERIAL CONTAMINATION IS ENCOUNTERED OR SUSPECTED, THE CONTRACTOR SHALL NOTIFY THE OWNER, THE PROJECT MANAGER, AND THE DESIGN PROFESSIONAL IMMEDIATELY (WITHIN 24 HRS.) IN WRITING. CONTRACTOR WILL SUSPEND WORK IN THE AFFECTED AREA UNTIL SUCH TIME THAT THE SAID AREA IS CERTIFIED AS CONTAMINATION FREE.

ELECTRICAL DEMOLITION NOTES:

1. THE DEMOLITION WORK SHALL BE CARRIED ON IN EVERY RESPECT IN A THOROUGH AND NEAT AND SKILLFUL MANNER.
2. ALL DEMOLITION, REMOVAL, AND DISPOSAL WORK SHALL BE IN COMPLIANCE WITH THE REQUIREMENTS OF THE BUILDING CODE AND WITH ALL STATE AND FEDERAL REGULATIONS.
3. REMOVE ALL DEBRIS NOT EXPLICITLY DESIGNATED TO BE SALVAGED (TO REMAIN) FROM THE PREMISES AND LEGALLY DISPOSE OF AWAY FROM PREMISES.
4. ITEMS INDICATED TO BE SALVAGED SHALL BE REMOVED EITHER BEFORE DEMOLITION OR DURING THE PROCESS OF THE WORK, STORED AND PROTECTED ON THE SITE IN A LOCATION DESIGNATED BY THE OWNER'S REPRESENTATIVE. THESE ITEMS WILL BE IDENTIFIED AND RETAINED BY THE OWNER.
5. CAREFULLY REMOVE AND PROTECT ALL ITEMS TO BE SAVED AND REUSED AS INDICATED ON DRAWINGS. REPLACE ANY ITEMS THAT ARE DAMAGED BY REMOVAL AT YOUR OWN COST. NOTIFY THE OWNER IN WRITING OF ANY ITEM THAT IS DAMAGED PRIOR TO REMOVAL SO THAT THEY MAY ASCERTAIN THE ITEM'S CONDITION.
6. PROTECT MATERIALS, SURFACES AND STRUCTURE, WHICH ARE TO REMAIN, FROM DAMAGE; IF DAMAGE OCCURS, REPAIR OR REPLACEMENT SHALL BE MADE BY THE CONTRACTOR, TO THE SATISFACTION OF THE OWNER, AND AT THE EXPENSE OF THE CONTRACTOR.
7. DISCONNECT, REMOVE AND RELOCATE ANY ELECTRICAL EQUIPMENT NOT SHOWN ON THESE DRAWINGS AS PART OF THIS CONTRACT, BUT INTERFERES WITH THE WORK UNDER THIS CONTRACT. THIS WORK SHALL NOT BE CONSIDERED EXTRA AND SHALL BE DONE AT NO ADDITIONAL COST TO THE OWNER.
8. VISIT AND EXAMINE CAREFULLY THE AREAS AFFECTED BY THIS WORK TO BECOME FAMILIAR WITH EXISTING CONDITIONS AND WITH THE DIFFICULTIES THAT ATTEND THE EXECUTION OF THIS WORK. LATER CLAIMS WILL NOT BE RECOGNIZED FOR EXTRA LABOR, EQUIPMENT, OR MATERIALS REQUIRED BECAUSE OF DIFFICULTIES ENCOUNTERED.
9. RELOCATE AND/OR ALTER THE EXISTING BUILDING COMPONENTS AS DIRECTED BY OWNER'S REPRESENTATIVE. ALL RELOCATION OR ALTERATIONS TO BUILDING SHALL BE RESTORED TO THEIR ORIGINAL WORKING CONDITIONS AFTER SUCH RELOCATION OR ALTERATION WORK.
10. AT THE COMPLETION OF DEMOLITION WORK, ALL RUBBISH, DEBRIS AND WASTE MATERIALS SHALL BE REMOVED BY THE CONTRACTOR AND THE PREMISES SHALL BE LEFT IN CLEAN CONDITION.
11. THE CONTRACTOR SHALL DISCONNECT THE CIRCUIT WIRING NOT IN USE AND SHALL REMOVE ALL NECESSARY WIRING MATERIALS, INCLUDING EXPOSED CONDUITS AND JUNCTION BOXES WHICH IMPEDE THE NEW WORK.
12. MAINTAIN CONTINUITY FOR ALL EQUIPMENT TO REMAIN. PROVIDE ALL REQUIRED ACCESSORIES, WIRING AND CONDUIT AS REQUIRED.
13. SUBSTANTIAL JOB COMPLETION INCORPORATES DEMOLITION OF EXISTING SYSTEMS IN CONTRACT.
14. THE BUILDING FA SYSTEM SHALL BE REMOVED AND REPLACED WITH NEW. THE EXISTING FIRE ALARM SYSTEM SHALL REMAIN OPERATIONAL AT ALL TIMES DURING CONSTRUCTION UNTIL NEW SYSTEM IS INSTALLED AND APPROVED.
15. CONTRACTOR TO PROVIDE ALL PHYSICAL PROTECTION REQUIRED TO PROTECT ALL EQUIPMENT DURING CONSTRUCTION.
16. ALL HOLES MADE BY THE CONTRACTOR DURING CONSTRUCTION SHALL BE PROPERLY PATCHED AND REPAIRED. ALL CONDUIT PENETRATIONS THROUGH FLOORS AND WALLS SHALL BE SEALED.
17. THE CONTRACTOR SHALL PERFORM ALL CUTTING, PATCHING AND REPAIRING AS REQUIRED TO COMPLETE ALL WORK INDICATED ON THE DRAWINGS, AND ALL OTHER WORK THAT MAY BE REQUIRED TO COMPLETE THE JOB.

DRAWING LIST

Sheet Number	Sheet Title
E001	ELECTRICAL GENERAL NOTES & SYMBOLS
ED101	ELECTRICAL FIRST FLOOR - DEMOLITION
ED102	ELECTRICAL SECOND FLOOR - DEMOLITION
ED103	ELECTRICAL ROOF - DEMOLITION
E101	ELECTRICAL FIRST FLOOR - INSTALLATION
E111	ELECTRICAL FIRST FLOOR EQUIPMENT - INSTALLATION
E102	ELECTRICAL SECOND FLOOR - INSTALLATION
E112	ELECTRICAL SECOND FLOOR EQUIPMENT - INSTALLATION
E103	ELECTRICAL ROOF PLAN - INSTALLATION
E104	ELECTRICAL SITE PLAN
E201	ELECTRICAL FIRST FLOOR RCP -INSTALLATION
E202	ELECTRICAL SECOND FLOOR RCP -INSTALLATION
E203	ELECTRICAL LIGHTING CONTROLS
E204	ELECTRICAL AV CONTROLS
E301	ELECTRICAL POWER RISER
E302	ELECTRICAL SYSTEMS PARTIAL RISERS
E401	ELECTRICAL PANEL SCHEDULES SHEET NO.1
E402	ELECTRICAL PANEL SCHEDULES SHEET NO.2
E501	ELECTRICAL DETAILS

ABBREVIATIONS

A	AMPERE
AC	ALTERNATING CURRENT
AFF	ABOVE FINISHED FLOOR
AWG	AMERICAN WIRE GAUGE
A/C	AIR CONDITIONING
C	CONDUIT
CB	CIRCUIT BREAKER
CKT(S)	CIRCUIT(S)
CLG	CEILING
COL	COLUMN
CONT	CONTINUATION
DACT	DIGITAL ALARM COMMUNICATOR TRANSMITTER
DISC	DISCONNECT
DN	DOWN
DWG	DRAWING
EC	EMPTY CONDUIT
ELEC	ELECTRIC
EM	EMERGENCY
ER	EXISTING TO BE RELOCATED
EQ.	EQUAL
EXH	EXHAUST
EXIST,EX,E	EXISTING
FA	FIRE ALARM
FACP	FIRE ALARM CONTROL PANEL
FL	FLOOR
G,GND	GROUND
GFI	GROUND FAULT INTERRUPTER
HP	HORSE POWER
IG	ISOLATED GROUND
J	JUNCTION BOX
KCMIL	THOUSAND CIRCULAR MILS
KVA	KILOVOLT AMPERE
KW	KILOWATT
LTG	LIGHTING
MCB	MAIN CIRCUIT BREAKER
MLO	MAIN LUG ONLY
MTD	MOUNTED
N	NEUTRAL
N.C	NORMALLY CLOSED
NIC	NOT IN CONTRACT
N.O	NORMALLY OPEN
NTS	NOT TO SCALE
PB	PULL BOX
PNL	PANEL
ϕ, P	PHASE
PWR	POWER
R	EXISTING TO REMOVED
RE	EXIST TO BE REMOVED/ RETURNED
REC	RECEPTACLE
SP	SPARE
SW	SWITCH
SWBD	SWITCHBOARD
TYP	TYPICAL
U.O.N	UNLESS OTHERWISE NOTED
V	VOLT, VOLTAGE
VIF	VERIFY IN FIELD
W	WATT
WAP	WIRELESS ACCESS POINT
WP	WEATHER PROOF
XFMR	TRANSFORMER
1P, 2P, 3P	SINGLE POLE, TWO POLE, THREE POLE

POWER SYMBOLS

S^{3}_{a}	SINGLE POLE SWITCH 2 = DOUBLE POLE 3 = THREE-WAY V = VARIABLE SWITCH a = CONTROLS SWITCH LEG 'a' MO = MOMENTARY CONTACT M,2P = DISCONNECT SWITCH - TOGGLE TYPE MOTOR RATED, 20A, 2P, UON.
a	NEMA 5-20R, 20A, 125V DUPLEX RECEPTACLE - FLUSH WALL MOUNTED CONTROLLED FROM WALL SWITCH 'a'
S	NEMA 5-20R, 20A, 125V QUAD RECEPTACLE COMBINATION HDMI, USB, CAT6, VGA - FLUSH WALL MOUNTED OUTLET
	NEMA 5-20R, 20A, 125V DUPLEX, ISOLATED GROUND COMPUTER RECEPTACLE - FLUSH WALL MOUNTED; PROVIDE WITH ORANGE TRIAGE ON FACEPLATE OF RECEPTACLE PER CODE.
GFI	NEMA 5-20R, 20A, 125V DEDICATED DUPLEX RECEPTACLE - FLUSH WALL MOUNTED. GFI DENOTES GROUND FAULT INTERRUPTER.
	NEMA 5-20R, 20A, 125V QUAD RECEPTACLE - FLUSH WALL MOUNTED
	NEMA 5-20R, 20A, 125V DEDICATED QUADRUPLEX RECEPTACLE - FLUSH WALL MOUNTED
A	SINGLE SPECIAL PURPOSE RECEPTACLE - FLUSH WALL MOUNTED LETTER = TYPE 'A' - (15A) NEMA CONFIG. 6-15R, 250V, 2P, 3W, GROUNDED 'B' - (20A) NEMA CONFIG. 6-20R 'C' - (30A) NEMA CONFIG. 6-30R 'D' - (50A) NEMA CONFIG. 6-50R
GFI	COORDINATE MOUNTING HEIGHTS OF DEVICES WITH ARCHITECT AND FURNITURE INSTALLATIONS.
5 3 1	HOMERUN-NUMERAL WHERE USED INDICATES CIRCUIT NUMBER FOR REFERENCE ONLY. 2#12+1#12G-3/4"C FOR ONE CKT. HOMERUN, U.O.N. 3#12+1#12G-3/4"C FOR TWO CKT. HOMERUN, U.O.N. 4#12+1#12G-3/4"C FOR THREE CKT. HOMERUN, U.O.N.
J	JUNCTION BOX
100/60 J 3P	FUSED DISCONNECT SWITCH, VOLTAGE RATING AS REQUIRED '100' -DENOTES SWITCH SIZE '60' -DENOTES FUSE SIZE IF INDICATED '3P' -DENOTES NUMBER OF POLES
30A,3P WP	NON-FUSED DISCONNECT SWITCH. VOLTAGE RATING AS REQUIRED BRANCH CIRCUIT PROTECTIVE DEVICE '30A' - DENOTES SWITCH SIZE '3P' -DENOTES NUMBER OF POLES
30A J	VARIABLE FREQUENCY DRIVE/MOTOR STARTER. VOLTAGE RATING AS REQUIRED BRANCH CIRCUIT PROTECTIVE DEVICE '30A' - DENOTES AMPERAGE RATING
W	METER
	SURFACE MOUNTED LIGHTING/POWER PANELBOARD
	RECESSED MOUNTED LIGHTING/POWER PANELBOARD
C P	EXISTING CONDUIT STUB UPS TO FURNITURE TO REMAIN.
A	FLUSH FLOOR MOUNTED FIRE RATED COMBINATION FLOOR BOX. PROVIDE COMBINATION/TYPE OF RECEPTACLES AND/OR TELECOMMUNICATIONS OUTLETS AS INDICATED BY SYMBOLS. COORDINATE COMPONENT REQUIREMENTS WITH CLIENT. VIF CONDUIT ROUTING/LOCATION OF DEVICE. COORDINATE WITH MANUFACTURER TO PROVIDE ALL COMPONENTS REQUIRED FOR A COMPLETE SYSTEM INSTALLATION. PROVIDE LEGRAND, MODEL EFB8S, OR APPROVED EQUIVALENT. RUN 3/4"C FOR POWER AND 1-1/4"C FOR COMMUNICATIONS. TERMINATE ENDS WITH BUSHING.
P C	FLUSH WALL MOUNTED JUNCTION BOX FOR POWER WIRING TO FURNITURE RACEWAY SYSTEM. PROVIDE FLEXIBLE CONDUIT CONNECTION FROM THE JUNCTION BOX TO RACEWAY SYSTEM; 3/4" C FOR POWER FEED
C C	FLUSH WALL MOUNTED JUNCTION BOX FOR COMMUNICATION WIRING TO FURNITURE RACEWAY SYSTEM. PROVIDE FLEXIBLE CONDUIT CONNECTION FROM THE JUNCTION BOX TO RACEWAY SYSTEM AND 1-1/4" EMPTY CONDUIT WITH (2) PULL STRINGS STUBBED 6" ABOVE ACCESSIBLE HUNG CEILING AND TERMINATED WITH BUSHING. PROVIDE WITH (2) DATA DROPS PER WORKSTATION.
GND "TP"	WALL MOUNTED GROUND BUS BAR
	EXISTING CONDUIT/EQUIPMENT TO REMAIN
	CONDUIT TRENCHED IN SLAB
	CONDUIT STUBBED UP
	CONDUIT OPENING OUT TO FLOOR
	CONDUIT END WITH BUSHING

COMMUNICATION SYMBOLS

	WALL MOUNTED OUTLET IN DOUBLE GANG BOX WITH SINGLE GANG REDUCER PLATE AND 1" EMPTY CONDUIT WITH (2) PULL STRINGS STUBBED 6" ABOVE ACCESSIBLE HUNG CEILING IN A 90 DEGREE BEND AND TERMINATED WITH BUSHING. PROVIDE WITH 2 DATA JACKS.
	WALL MOUNTED DATA OUTLET IN DOUBLE GANG BOX WITH SINGLE GANG REDUCER PLATE AND 1" EMPTY CONDUIT WITH (2) PULL STRINGS STUBBED 6" ABOVE ACCESSIBLE HUNG CEILING IN A 90 DEGREE BEND AND TERMINATED WITH BUSHING.
	WALL MOUNTED DATA OUTLET IN DOUBLE GANG BOX AND 1" EMPTY CONDUIT WITH (2) PULL STRINGS STUBBED 6" ABOVE ACCESSIBLE HUNG CEILING IN A 90 DEGREE BEND AND TERMINATED WITH BUSHING.
	WALL MOUNTED AUDIO/VISUAL OUTLET IN DOUBLE GANG BOX AND 1-1/4" EMPTY CONDUIT WITH (2) PULL STRINGS STUBBED 6" ABOVE ACCESSIBLE HUNG CEILING IN A 90 DEGREE BEND AND TERMINATED WITH BUSHING.
T	WALL MOUNTED THERMOSTAT; PROVIDE DOUBLE GANG BOX, 1" EMPTY CONDUIT WITH PULL STRING STUBBED 6" ABOVE ACCESSIBLE HUNG CEILING IN A 90 DEGREE BEND AND TERMINATED WITH BUSHING. COORDINATE INSTALLATIONS WITH MECHANICAL CONTRACTOR.
WAP	WIRELESS ACCESS POINT
	CEILING MOUNTED PA SPEAKER
	CEILING MOUNTED OUTLET IN DOUBLE GANG BOX WITH SINGLE GANG REDUCER PLATE. HORIZONTAL CAT6 CABLES TO BE SUPPORTED VIA J-HOOKS. VERTICAL RUNS SHALL BE IN 1" CONDUIT WITH (2) PULL STRINGS STUBBED 6" ABOVE ACCESSIBLE HUNG CEILING IN A 90 DEGREE BEND AND TERMINATED WITH BUSHING. PROVIDE WITH OUTLET WITH 2 DATA JACKS.
	CEILING MOUNTED OUTLET IN DOUBLE GANG BOX WITH SINGLE GANG REDUCER PLATE. HORIZONTAL CAT6 CABLES TO BE SUPPORTED VIA J-HOOKS. VERTICAL RUNS SHALL BE IN 1" CONDUIT WITH (2) PULL STRINGS STUBBED 6" ABOVE ACCESSIBLE HUNG CEILING IN A 90 DEGREE BEND AND TERMINATED WITH BUSHING. PROVIDE WITH OUTLET WITH 1 DATA JACK.
FA	DACT DEDICATED PHONE CONNECTION TO FIRE ALARM. REFER TO FIRE ALARM DRAWINGS.
FF #X	SYSTEMS RISER SYMBOL: REFER TO FLUSH FLOOR MOUNTED COMBINATION POKE-THRU SYMBOL DESCRIPTION. SUPERSCRIPT "FF" DENOTES FLOOR MOUNTED FURNITURE WHIPS SUPERSCRIPT "PT" DENOTES FLOOR MOUNTED OUTLET. FOR SUBSCRIPT "#X", LETTER DENOTES QTY OF DATA RUNS.
SP	WALL MOUNTED SPEAKER; SUBSCRIPT "SP" DENOTES SPEAKER FOR THEATER; SUBSCRIPT "SW" DENOTES SUBWOOFER FOR THEATER
MDR	MAIN DATA RACK
RACK	THEATER 21 U RACK

LIGHTING SYMBOLS

'A' NL a 'A' NL a NL 'A'	2'x4'/2'x2'/1'x4' FLUORESCENT CEILING MOUNTED FIXTURE 'A' = FIXTURE TYPE 'a' = CONTROLLED BY SWITCH 'a' NS = NOT SWITCHED NL = NIGHT LIGHT
'A' a	SIMILAR TO ABOVE WITH EMERGENCY BACKUP 'A' = FIXTURE TYPE 'a' = CONTROLLED BY SWITCH 'a'
'A'	CEILING MOUNTED EXIT LIGHT - DIRECTIONAL ARROWS WHERE INDICATED - SHADED AREAS INDICATE ILLUMINATED FACE/FACES 'A' = FIXTURE TYPE
EXIT	EXIT SIGN WITH EMERGENCY LIGHT
OS	CEILING MOUNTED SENSOR; 'OC' DENOTES OCCUPANCY SENSOR; 'VS' DENOTES VACANCY SENSOR; 'DL' DENOTES PHOTO SENSOR, " a" DENOTES ZONE CONTROL
J PP	POWER PACKS; FINAL OPTION PER APPROVED MANUFACTURER. PD DENOTES FOR DAYLIGHT ZONE DIMMING) PP DENOTES (DIMMING OPTION) P1 DENOTES (NON-DIMMING OPTION) EM DENOTES (EMERGENCY OPTION)
HUB	HUB
S^{b}_{OS}	WALL MOUNTED TWO-ZONE RAISE/LOWER SWITCH. PROVIDE NECESSARY APPURTENANCES FOR A COMPLETE INSTALLATION.
$S^{b}_{OS,\#}$	WALL MOUNTED SINGLE/MULTI-ZONE RAISE/LOWER SWITCH FOR OPEN AREA ZONE CONTROL. PROVIDE NECESSARY APPURTENANCES FOR A COMPLETE INSTALLATION. LETTER(S) DENOTES LIGHTING ZONE DESIGNATION. REFER TO DWG. E203.
$S^{b,c}_{MS,\#}$	WALL MOUNTED MAIN AREA, CORRIDOR AND OPEN AREA SWITCH. LETTER DENOTES LIGHTING ZONE DESIGNATION. REFER TO DWG. E203 FOR SWITCH TYPE AND LIGHTING CONTROL PACKAGE.
S^{b}_{O}	WALL MOUNTED TWO ZONE RAISE/LOWER SWITCH(ES) TO SUIT APPLICATION.
$S_{OS,D}$	WALL MOUNTED LINE-VOLTAGE SINGLE-ZONE RAISE/LOWER SWITCH WITH OCCUPANCY SENSOR.
S_{OS}	WALL MOUNTED LINE-VOLTAGE OCCUPANCY SENSOR SWITCH. LETTER DENOTES LIGHTING ZONE DESIGNATION.
S_{VS}	WALL MOUNTED LINE-VOLTAGE VACANCY SENSOR SWITCH. LETTER DENOTES LIGHTING ZONE DESIGNATION.
A #	SECTION A # = DRAWING NUMBER

No.	Date	Revisions
0	02-18-25	RFP SET

Drawn by JL
Checked by SH
Project No. 40034G
Scale NONE
Date 02/18/2025

GREENMAN PEDERSEN, INC
8 EXECUTIVE BOULEVARD
SUITE 202
SUFFERN, NY 10901
Mechanical, Electrical & Structural Engineer:

ATZL, NASHER, & ZIGLER
234 North Main Street
New City, NY 10956
Civil Engineer:

RENOVATION OF ROCKLAND GREEN ADMINISTRATIVE HEADQUARTERS AND CONSTRUCTION OF AN IMMERSIVE THEATRE EXPERIENCE

TOWN OF CLARKSTOWN
COUNTY OF ROCKLAND
172 MAIN STREET
NEW CITY, NY 10954

MICHAEL SHILALE ARCHITECTS, L.L.P.
140 Park Avenue New City, NY 10956 Tel 845-708-9200
www.shilale.com

© COPYRIGHT, MICHAEL SHILALE ARCHITECTS, ALL RIGHTS RESERVED.

Drawing Title
ELECTRICAL GENERAL NOTES & SYMBOLS

Drawing No.
E001

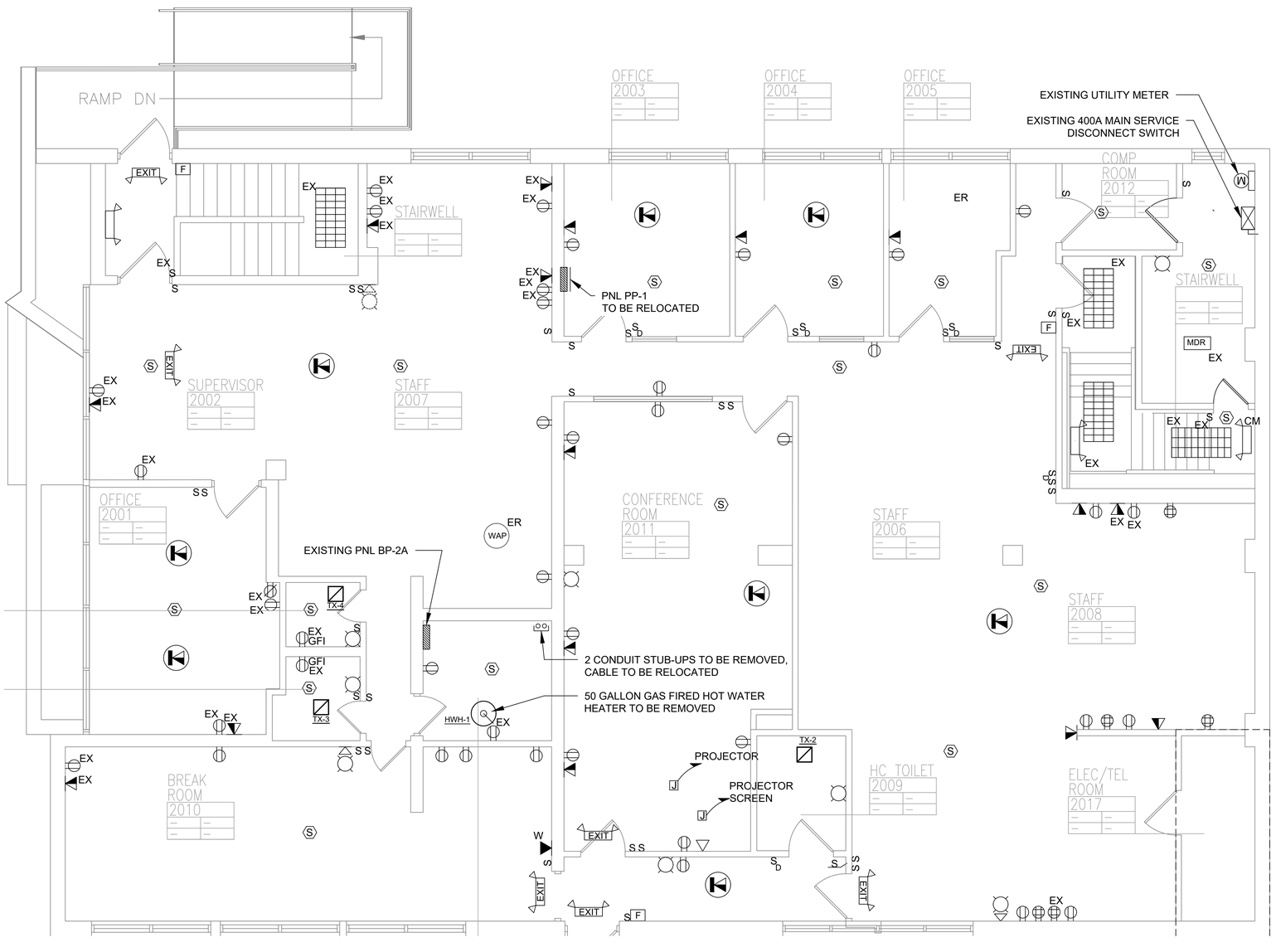

1 ED101 ELECTRICAL FIRST FLOOR PLAN - DEMOLITION

SCALE: 1/4" = 1'-0"

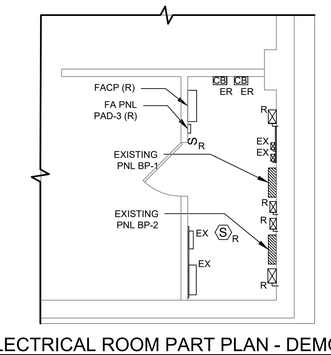

2 ED101 ELECTRICAL ROOM PART PLAN - DEMOLITION

SCALE: 3/16" = 1'-0"

PLAN NOTES:

1. FOR ELECTRICAL DEMOLITION NOTES, ABBREVIATIONS AND ELECTRICAL SYMBOLS; REFER TO DWG. E001.
2. CONTRACTOR SHALL MAINTAIN CONTINUITY TO ALL EXISTING CIRCUITRY TO REMAIN WHICH ARE AFFECTED BY THE SCOPE OF WORK; CONTRACTOR SHALL FURNISH ALL NECESSARY JUNCTION BOXES, CONDUIT, AND WIRES AS REQUIRED TO KEEP CONTINUITY.
3. ALL DEVICES INDICATED ON PLAN SHALL BE REMOVED UNLESS IDENTIFIED AS EXISTING TO REMAIN "EX" / EXISTING TO BE RELOCATED "ER". REFER TO NOTE 12.
4. WIRING AND CONDUITS OF EXISTING EQUIPMENT/DEVICES INDICATED TO BE REMOVED SHALL BE DISCONNECTED AND REMOVED BACK TO SOURCE, U.O.I. WHERE FEASIBLE, EXISTING CONDUITS CAN BE REUSED.
5. DISCONNECT ANY POWER TO MECHANICAL EQUIPMENT TO BE REMOVED BY MECHANICAL CONTRACTOR BACK TO SOURCE. COORDINATE REMOVAL SCOPE WITH MECHANICAL CONTRACTOR.
6. EXPOSED CONDUITS NOT BEING REUSED DURING THE INSTALLATION PHASE, SHALL BE REMOVED. CONCEALED CONDUITS NOT BEING REUSED SHALL REMAIN IN PLACE AND SHALL BE CAPPED AT BOTH ENDS, U.O.N.
7. CONTRACTOR IS RESPONSIBLE FOR RESTORING ALL DISTURBED SURFACES (I.E. PATCH, PAINT, ETC.) TO MATCH EXISTING CONDITIONS AFTER THE REMOVAL OF DEVICES/EQUIPMENT.
8. ALL OPENINGS SHALL BE SEALED AND PATCHED WITH AN APPROVED FIRE RATING MATERIAL. FIRE RATING TO MATCH EXISTING.
9. UPDATE ALL EXISTING PANEL DIRECTORIES AFFECTED BY NEW WORK.
10. EXISTING FIRE ALARM SYSTEM AND ITS ASSOCIATED DEVICES, WIRING AND CONDUITS SHALL BE REMOVED AND REPLACED WITH NEW SYSTEM. REFER TO NEW WORK PLANS.
11. WHERE PARTITIONS ARE BEING MODIFIED AS PART OF THE ARCHITECTURAL WORK, ALL DEVICES TO REMAIN THAT INTERFERE WITH THE NEW PARTITIONS SHALL BE RELOCATED TO THE NEAREST WALL, UNLESS OTHERWISE INDICATED ON PLANS.
12. WHERE CEILINGS ARE BEING MODIFIED, ALL CEILING MOUNTED DEVICES TO REMAIN SHOWN/NOT SHOWN ON PLAN (I.E. PA SPEAKERS, WAP, ETC.) SHALL BE TEMPORARILY REMOVED AND REPLACED IN NEW CEILING. UTILIZE EXISTING CABLING AND CONDUITS WHERE APPLICABLE. PROVIDE NEW COMMUNICATION CABLES FROM SOURCE TO DEVICE WHERE REQUIRED.
13. DISCONNECT CABLING FROM DATA AND COMMUNICATION DEVICES INDICATED TO BE REMOVED. CABLING AND CONDUITS SHALL BE REMOVED BACK TO SOURCE. REFER TO NEW WORK PLANS FOR ADDITIONAL INFORMATION.

0 1/2 1
IF THIS BAR DOES NOT MEASURE 1" THEN DRAWING IS NOT TO FULL SCALE

No.	Date	Revisions
0	02-18-25	RFP SET

Drawn by JL
Checked by SH
Project No. 40034G
Scale
Date 02/18/2025

GREENMAN PEDERSEN, INC
2 EXECUTIVE BOULEVARD SUITE 202
SUFFERN, NY 10901
Mechanical, Electrical & Structural Engineer:

ATZL,NASHER,& ZIGLER
254 North Main Street
New City, NY 10956
Civil Engineer:

RENOVATION OF ROCKLAND GREEN ADMINISTRATIVE HEADQUARTERS AND CONSTRUCTION OF AN IMMERSIVE THEATRE EXPERIENCE
172 MAIN STREET
NANUET, NY 10954
TOWN OF CLARKSTOWN
COUNTY OF ROCKLAND

MSA
MICHAEL SHILALE ARCHITECTS, L.L.P.
140 Park Avenue New City, NY 10956 Tel 845-708-9200
www.mshlaa.com

© COPYRIGHT, MICHAEL SHILALE ARCHITECTS, ALL RIGHTS RESERVED.

Drawing Title
ELECTRICAL FIRST FLOOR - DEMOLITION

Drawing No.
ED101

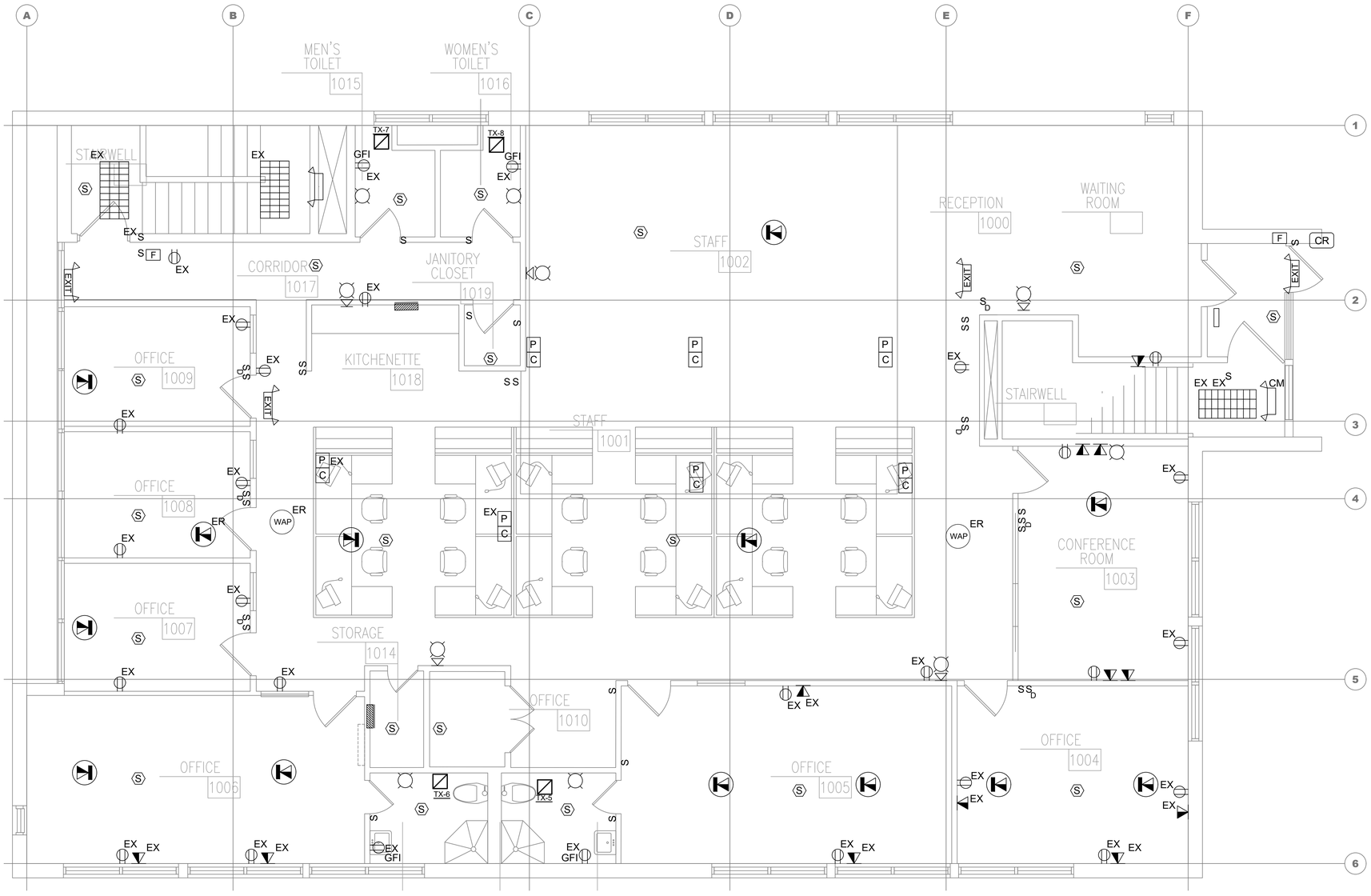

1 ED102 ELECTRICAL SECOND FLOOR PLAN - DEMOLITION

SCALE: 1/4" = 1'-0"

PLAN NORTH

PLAN NOTES:

1. FOR ELECTRICAL DEMOLITION NOTES, ABBREVIATIONS AND ELECTRICAL SYMBOLS; REFER TO DWG. E001.
2. CONTRACTOR SHALL MAINTAIN CONTINUITY TO ALL EXISTING CIRCUITRY TO REMAIN WHICH ARE AFFECTED BY THE SCOPE OF WORK; CONTRACTOR SHALL FURNISH ALL NECESSARY JUNCTION BOXES, CONDUIT, AND WIRES AS REQUIRED TO KEEP CONTINUITY.
3. ALL DEVICES INDICATED ON PLAN SHALL BE REMOVED UNLESS IDENTIFIED AS EXISTING TO REMAIN "EX" / EXISTING TO BE RELOCATED "ER". REFER TO NOTE 12.
4. WIRING AND CONDUITS OF EXISTING EQUIPMENT/DEVICES INDICATED TO BE REMOVED SHALL BE DISCONNECTED AND REMOVED BACK TO SOURCE, U.O.I. WHERE FEASIBLE, EXISTING CONDUITS CAN BE REUSED.
5. DISCONNECT ANY POWER TO MECHANICAL EQUIPMENT TO BE REMOVED BY MECHANICAL CONTRACTOR BACK TO SOURCE. COORDINATE REMOVAL SCOPE WITH MECHANICAL CONTRACTOR.
6. EXPOSED CONDUITS NOT BEING REUSED DURING THE INSTALLATION PHASE, SHALL BE REMOVED. CONCEALED CONDUITS NOT BEING REUSED SHALL REMAIN IN PLACE AND SHALL BE CAPPED AT BOTH ENDS, U.O.N.
7. CONTRACTOR IS RESPONSIBLE FOR RESTORING ALL DISTURBED SURFACES (I.E. PATCH, PAINT, ETC.) TO MATCH EXISTING CONDITIONS AFTER THE REMOVAL OF DEVICES/EQUIPMENT.
8. ALL OPENINGS SHALL BE SEALED AND PATCHED WITH AN APPROVED FIRE RATING MATERIAL. FIRE RATING TO MATCH EXISTING.
9. UPDATE ALL EXISTING PANEL DIRECTORIES AFFECTED BY NEW WORK.
10. EXISTING FIRE ALARM SYSTEM AND ITS ASSOCIATED DEVICES, WIRING AND CONDUITS SHALL BE REMOVED AND REPLACED WITH NEW SYSTEM. REFER TO NEW WORK PLANS.
11. WHERE PARTITIONS ARE BEING MODIFIED AS PART OF THE ARCHITECTURAL WORK, ALL DEVICES TO REMAIN THAT INTERFERE WITH THE NEW PARTITIONS SHALL BE RELOCATED TO THE NEAREST WALL, UNLESS OTHERWISE INDICATED ON PLANS.
12. WHERE CEILINGS ARE BEING MODIFIED, ALL CEILING MOUNTED DEVICES TO REMAIN SHOWN/NOT SHOWN ON PLAN (I.E. PA SPEAKERS, WAP, ETC.) SHALL BE TEMPORARILY REMOVED AND REPLACED IN NEW CEILING. UTILIZE EXISTING CABLING AND CONDUITS WHERE APPLICABLE. PROVIDE NEW COMMUNICATION CABLES FROM SOURCE TO DEVICE WHERE REQUIRED.
13. DISCONNECT CABLING FROM DATA AND COMMUNICATION DEVICES INDICATED TO BE REMOVED. CABLING AND CONDUITS SHALL BE REMOVED BACK TO SOURCE. REFER TO NEW WORK PLANS FOR ADDITIONAL INFORMATION.

0 1/2 1
IF THIS BAR DOES NOT MEASURE 1", THEN DRAWING IS NOT TO FULL SCALE

No.	Date	Revisions
0	02-18-25	RFP SET

Drawn by JL
Checked by SH
Project No. 40034G
Scale
Date 02/18/2025

GREENMAN PEDERSEN, INC
2 EXECUTIVE BOULEVARD
SUITE 202
SUFFERN, NY 10901
Mechanical, Electrical & Structural Engineer:

ATZL, NASHER, & ZIGLER
234 North Main Street
New City, NY 10956
Civil Engineer:

RENOVATION OF ROCKLAND GREEN ADMINISTRATIVE HEADQUARTERS AND CONSTRUCTION OF AN IMMERSIVE THEATRE EXPERIENCE
172 MAIN STREET
NANUET, NY 10954
TOWN OF CLARKSTOWN
COUNTY OF ROCKLAND

MICHAEL SHILALE ARCHITECTS, L.L.P.
140 Park Avenue New City, NY 10956 Tel 845-708-9200
www.shilale.com

© COPYRIGHT, MICHAEL SHILALE ARCHITECTS, ALL RIGHTS RESERVED.

Drawing Title
ELECTRICAL SECOND FLOOR - DEMOLITION

Drawing No.
ED102

PLAN NOTES:

1. FOR ELECTRICAL DEMOLITION NOTES, ABBREVIATIONS AND ELECTRICAL SYMBOLS; REFER TO DWG. E001.
2. CONTRACTOR SHALL MAINTAIN CONTINUITY TO ALL EXISTING CIRCUITRY TO REMAIN WHICH ARE AFFECTED BY THE SCOPE OF WORK; CONTRACTOR SHALL FURNISH ALL NECESSARY JUNCTION BOXES, CONDUIT, AND WIRES AS REQUIRED TO KEEP CONTINUITY.
3. WIRING AND CONDUITS OF EXISTING EQUIPMENT/DEVICES INDICATED TO BE REMOVED SHALL BE DISCONNECTED AND REMOVED BACK TO SOURCE, U.O.I. WHERE FEASIBLE, EXISTING CONDUITS CAN BE REUSED.
4. DISCONNECT ANY POWER TO MECHANICAL EQUIPMENT TO BE REMOVED BY MECHANICAL CONTRACTOR BACK TO SOURCE. COORDINATE REMOVAL SCOPE WITH MECHANICAL CONTRACTOR.
5. EXPOSED CONDUITS NOT BEING REUSED DURING THE INSTALLATION PHASE, SHALL BE REMOVED. CONCEALED CONDUITS NOT BEING REUSED SHALL REMAIN IN PLACE AND SHALL BE CAPPED AT BOTH ENDS, U.O.N.
6. CONTRACTOR IS RESPONSIBLE FOR RESTORING ALL DISTURBED SURFACES (I.E. PATCH, PAINT, ETC.) TO MATCH EXISTING CONDITIONS AFTER THE REMOVAL OF DEVICES/EQUIPMENT.
7. ALL OPENINGS SHALL BE SEALED TO WATER TIGHT CONDITION AND RESTORED TO MATCH EXISTING FIRE RATING.
8. UPDATE ALL EXISTING PANEL DIRECTORIES AFFECTED BY REMOVAL WORK.

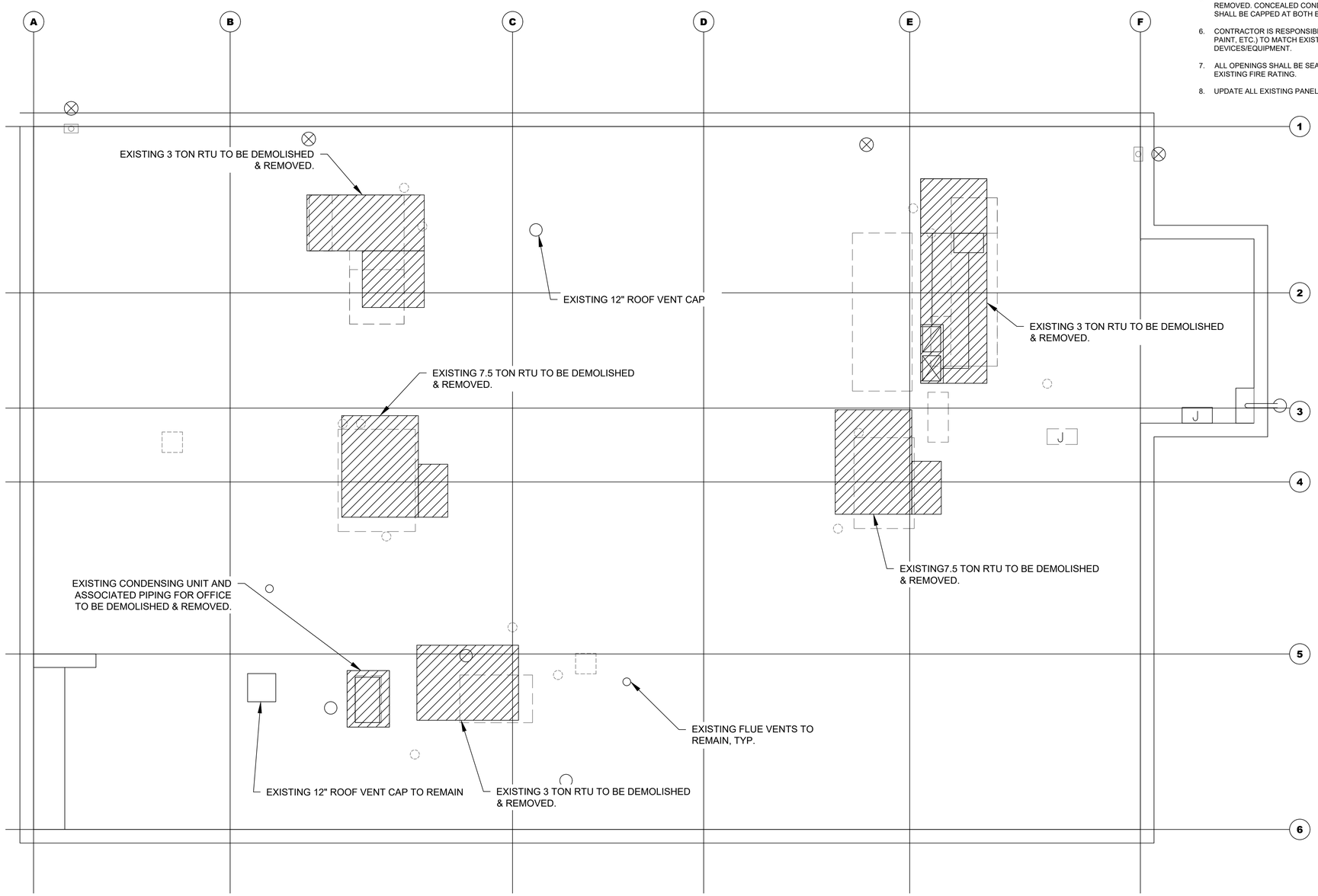

1 / ED103 ELECTRICAL ROOF PLAN - DEMOLITION

SCALE: 1/4" = 1'-0"

PLAN NORTH

IF THIS BAR DOES NOT MEASURE 1", THEN DRAWING IS NOT TO FULL SCALE

0 1/2 1

No.	Date	Revisions
0	02-18-25	RFP SET

Drawn by JL

Checked by SH

Project No. 40034G

Scale

Date 02/18/2025

GREENMAN PEDERSEN, INC
2 EXECUTIVE BOULEVARD
SUITE 202
SUFFERN, NY 10901

Mechanical, Electrical & Structural Engineer:

ATZL, NASHER, & ZIGLER
234 North Main Street
New City, NY 10956

Civil Engineer:

RENOVATION OF ROCKLAND GREEN ADMINISTRATIVE HEADQUARTERS AND CONSTRUCTION OF AN IMMERSIVE THEATRE EXPERIENCE

TOWN OF CLARKSTOWN
COUNTY OF ROCKLAND

175 MAIN STREET
NANUET, NY 10954

MICHAEL SHILALE ARCHITECTS, L.L.P.
140 Park Avenue New City, NY 10956 Tel 845-709-8200
www.shilale.com

© COPYRIGHT, MICHAEL SHILALE ARCHITECTS, ALL RIGHTS RESERVED.

Drawing Title
ELECTRICAL ROOF - DEMOLITION

Drawing No.
ED103

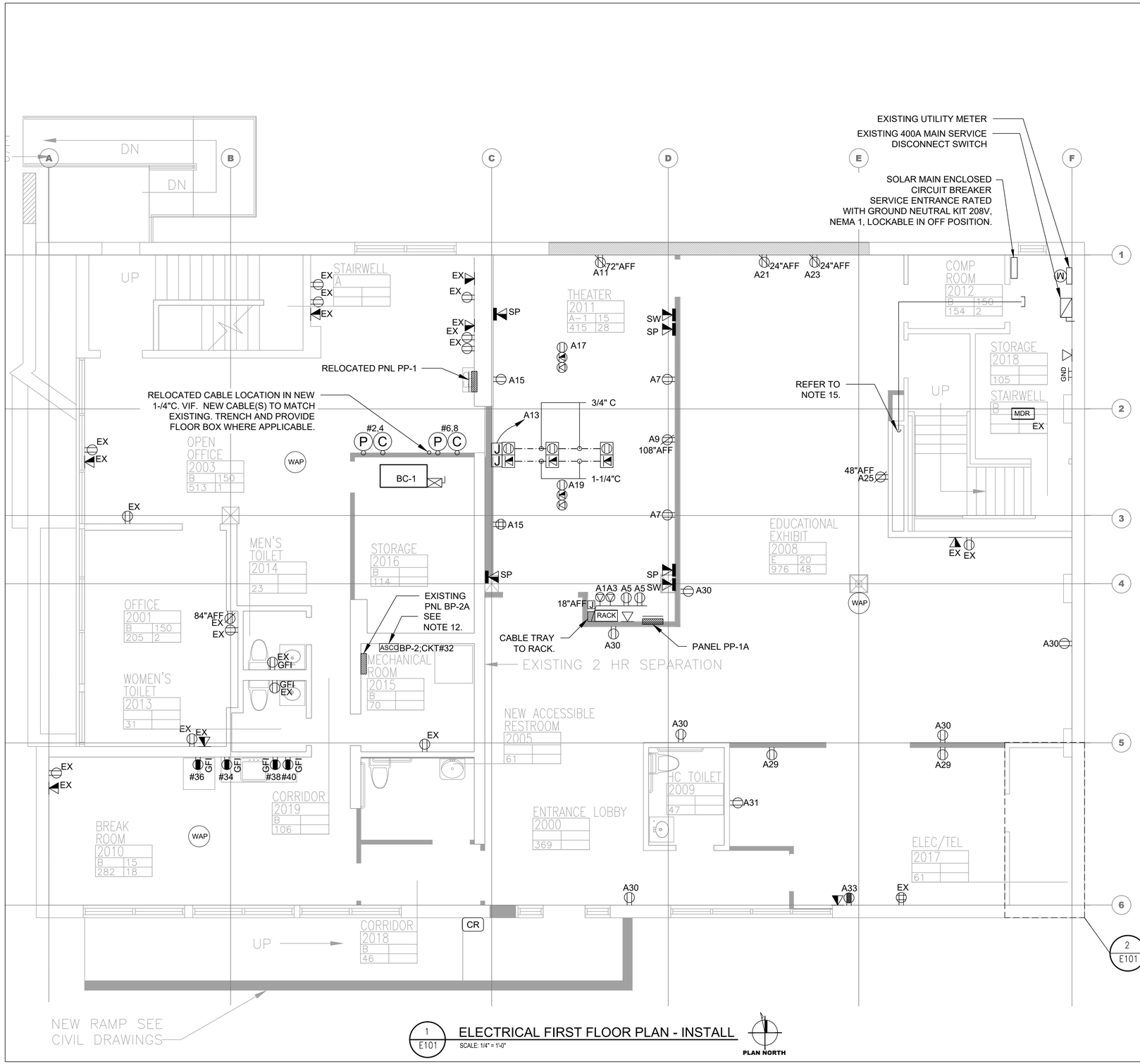

1 E101 ELECTRICAL FIRST FLOOR PLAN - INSTALL

SCALE: 1/4" = 1'-0"

PLAN NOTES:

1. FOR GENERAL NOTES, ABBREVIATIONS AND ELECTRICAL SYMBOLS, REFER TO DWG. E001.
2. COORDINATE LOCATION OF BASE BUILDING ELECTRICAL PANELS WITH PROPERTY MANAGER.
3. ALL WIRING SHALL BE 2#12 AWG, 1#12 AWG GND IN 3/4" C, U.O.N.
4. CIRCUIT NUMBERS ARE FOR IDENTIFICATION PURPOSES ONLY.
5. UPDATE ALL EXISTING PANELBOARD DIRECTORIES AFFECTED BY NEW WORK. REFER TO PANELBOARD DESIGNATION LEGEND FOR IDENTIFICATION OF PANELBOARDS AND CIRCUITS.
6. CONTRACTOR SHALL MAINTAIN CONTINUITY TO ALL EXISTING CIRCUITRY TO REMAIN WHICH ARE AFFECTED BY THE SCOPE OF WORK; CONTRACTOR SHALL FURNISH ALL NECESSARY JUNCTION BOXES, CONDUIT, AND WIRES ARE REQUIRED.
7. ALL OUTLET LOCATION AND MOUNTING HEIGHTS ARE PER ARCHITECT PLANS AND FIELD CONDITIONS, COORDINATE WITH ARCHITECT.
8. REFER TO MECHANICAL AND PLUMBING PLANS FOR EQUIPMENT TO BE SUPPLIED BY OTHER TRADES AND INSTALLED/WIRED UNDER THIS SECTION. COORDINATE WITH MECHANICAL CONTRACTOR FOR THERMOSTAT LOCATIONS.
9. REFER TO E111, E112, E103 AND E104 FOR POWER CONNECTIONS TO MECHANICAL AND/OR PLUMBING EQUIPMENT TO BE SUPPLIED BY OTHER TRADES AND INSTALLED/WIRED UNDER THIS SECTION. COORDINATE WITH MECHANICAL CONTRACTOR FOR THERMOSTAT LOCATIONS.
10. ALL TEL/DATA CABLING TO BE BY SYSTEMS VENDOR; COORDINATE LOCATIONS/ROUTING WITH SYSTEMS VENDOR.
11. PROVIDE DATA CONNECTIONS TO AUDIO VISUAL EQUIPMENT AS PER AUDIO RISER DIAGRAM. COORDINATE WORK WITH AV VENDOR.
12. PROVIDE ALL OUTLETS WITHIN 6FT. OF SINK WITH GFI RECEPTACLES AS PER NEC REQUIREMENTS.
13. UTILIZE PANEL PP-1 (#XX) AND PANEL PP-1A (A##) TO POWER CIRCUITS INDICATED WITHIN THE AREA OF WORK, UON.
14. ASCO TO SHUT DOWN WATER HEATER LOCATED IN ROOM 2015. WHERE REQUIRED. RUN 3#12 IN 3/4"C TO PANEL BP-2 TO POWER ASCO.VERIFY LOCATION OF DEVICE IN FIELD.
15. PROVIDE 2" EC TO SECOND FLOOR CEILING FOR VERTICAL DATA CABLE RUNS FROM MDR RACK TO SERVE NEW DATA OUTLETS ON THE SECOND FLOOR.VERIFY LOCATION OF CONDUIT IN FIELD. UTILIZE J-HOOKS FOR HORIZONTAL CABLE RUNS IN SECOND FLOOR CEILING, U.O.N..
16. DATA CABLES SHALL NOT BE VISIBLE IN EXHIBIT 2008 CEILING. RUN CABLES IN CONDUIT TO NEAREST ACCESSIBLE HUNG CEILING OR DOWN DIRECTLY TO OUTLET IN FULL HEIGHT PARTITIONS.
17. PROVIDE CABLE TRAY FOR CABLE RUNS TO THEATER RACK. COORDINATE REQUIREMENTS WITH WHIRLWIND AND ARCHITECT.
18. REFER TO WHIRLWIND AUDIO/VISUAL DRAWINGS FOR POWER AND COMMUNICATION REQUIREMENTS FOR THEATER AND EXHIBIT SPACE. PROVIDE ALL NECESSARY ANCILLARY COMPONENTS AS REQUIRED FOR A FULLY FUNCTIONAL SYSTEM INSTALLATION. PROVIDE CABLES, POWER, CONDUITS, ROUGH-INS, ETC. COORDINATE LOCATIONS AND REQUIREMENTS WITH WHIRLWIND AND THE ARCHITECT.

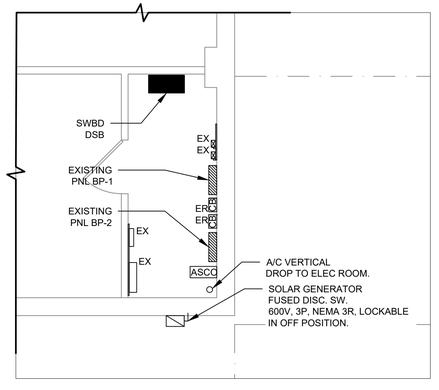

2 E101 ELECTRICAL ROOM PART PLAN - INSTALL

SCALE: 1/4" = 1'-0"

IF THIS BAR DOES NOT MEASURE 1", THEN DRAWING IS NOT TO FULL SCALE

No.	Date	Revisions
0	02-18-25	RFP SET

Drawn by JL
Checked by SH
Project No. 40034G
Scale
Date 02/18/2025

GREENMAN PEDERSEN, INC
2 EXECUTIVE BOULEVARD
SUITE 202
SUFFERN, NY 10901

Mechanical, Electrical & Structural Engineer:

ATZL, NASHER, & ZIGLER
234 North Main Street
New City, NY 10956

Civil Engineer:

RENOVATION OF ROCKLAND GREEN ADMINISTRATIVE HEADQUARTERS AND CONSTRUCTION OF AN IMMERSIVE THEATRE EXPERIENCE

TOWN OF CLARKSTOWN
COUNTY OF ROCKLAND

172 MAIN STREET
NEW HAVEN, CT 06504

MICHAEL SHILALE ARCHITECTS, L.L.P.
140 Park Avenue New City, NY 10956 Tel 845-709-8200
www.shilale.com

© COPYRIGHT, MICHAEL SHILALE ARCHITECTS, ALL RIGHTS RESERVED.

Drawing Title
ELECTRICAL FIRST FLOOR - INSTALLATION

Drawing No.
E101

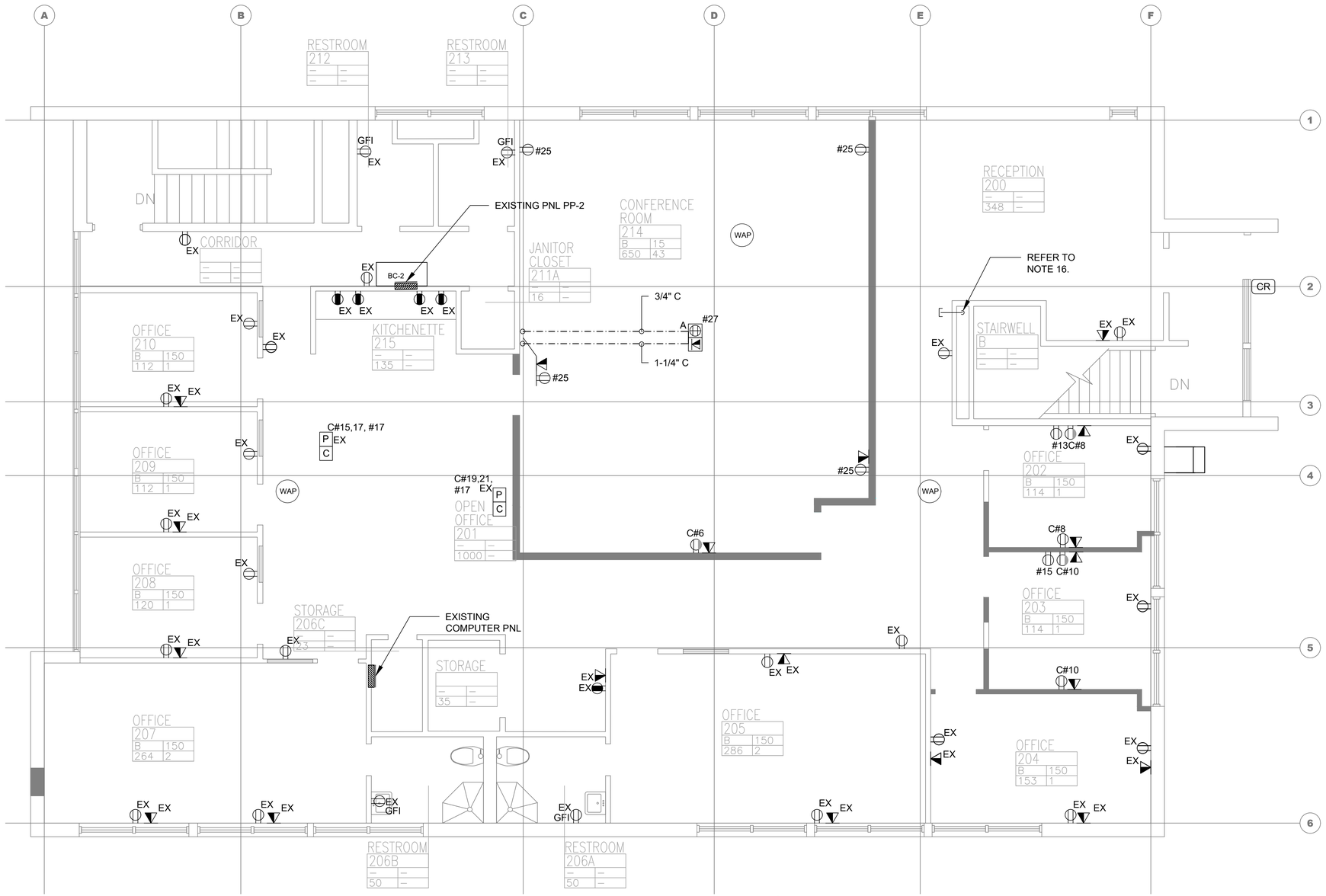

1 E102 ELECTRICAL SECOND FLOOR PLAN - INSTALL

SCALE: 1/4" = 1'-0"

PLAN NOTES:

3. ALL WIRING SHALL BE 2#12 AWG, 1#12 AWG GND IN 3/4" C, U.O.N.
4. CIRCUIT NUMBERS ARE FOR IDENTIFICATION PURPOSES ONLY.
5. UPDATE ALL EXISTING PANELBOARD DIRECTORIES AFFECTED BY NEW WORK. REFER TO PANELBOARD DESIGNATION LEGEND FOR IDENTIFICATION OF PANELBOARDS AND CIRCUITS.
6. CONTRACTOR SHALL MAINTAIN CONTINUITY TO ALL EXISTING CIRCUITRY TO REMAIN WHICH ARE AFFECTED BY THE SCOPE OF WORK; CONTRACTOR SHALL FURNISH ALL NECESSARY JUNCTION BOXES, CONDUIT, AND WIRES ARE REQUIRED.
7. ALL OUTLET LOCATION AND MOUNTING HEIGHTS ARE PER ARCHITECT PLANS AND FIELD CONDITIONS, COORDINATE WITH ARCHITECT.
8. REFER TO MECHANICAL AND PLUMBING PLANS FOR EQUIPMENT TO BE SUPPLIED BY OTHER TRADES AND INSTALLED/WIRED UNDER THIS SECTION. COORDINATE WITH MECHANICAL CONTRACTOR FOR THERMOSTAT LOCATIONS.
9. REFER TO E111, E112, E103 AND E104 FOR POWER CONNECTIONS TO MECHANICAL AND/OR PLUMBING EQUIPMENT TO BE SUPPLIED BY OTHER TRADES AND INSTALLED/WIRED UNDER THIS SECTION. COORDINATE WITH MECHANICAL CONTRACTOR FOR THERMOSTAT LOCATIONS.
10. ALL TEL/DATA CABLING TO BE BY SYSTEMS VENDOR; COORDINATE LOCATIONS/ROUTING WITH SYSTEMS VENDOR.
11. PROVIDE DATA CONNECTIONS TO AUDIO VISUAL EQUIPMENT AS PER AUDIO RISER DIAGRAM. COORDINATE WORK WITH AV VENDOR.
12. PROVIDE ALL OUTLETS WITHIN 6FT. OF SINK WITH GFI RECEPTACLES AS PER NEC REQUIREMENTS.
13. UTILIZE COMPUTER PANEL (C#XX) TO POWER CIRCUITS INDICATED WITHIN THE AREA OF WORK, UON.
14. PROVIDE 120V CKT CONNECTIONS TO AWNING SIGNAGE. REFER TO ARCHITECTURAL PLANS FOR OUTLET INSTALLATION LOCATIONS. COORDINATE WITH VENDOR TO VERIFY ALL COMPONENTS REQUIRED FOR A COMPLETE INSTALLATION.
15. PROVIDE EACH WORK STATION WITH THE FOLLOWING: (1) DUPLEX REC FROM PANEL PP-2, (1) DEDICATED DUPLEX RECEPTACLE FROM "COMPUTER PANEL", (2) DATA JACKS.
16. 2" EC WITH (2) PULL STRINGS STUBBED 6" ABOVE ACCESSIBLE HUNG 2ND FLOOR CEILING IN A 90 DEGREE BEND AND TERMINATED CONDUIT ENDS WITH BUSHING.

0 1/2 1
IF THIS BAR DOES NOT MEASURE 1", THEN DRAWING IS NOT TO FULL SCALE

No.	Date	Revisions
0	02-18-25	RFP SET

Drawn by JL
Checked by SH
Project No. 40034G
Scale
Date 02/18/2025

GREENMAN PEDERSEN, INC
2 EXECUTIVE BOULEVARD
SUITE 202
SUFFERN, NY 10901

Mechanical, Electrical & Structural Engineer:

ATZL, NASHER, & ZIGLER
234 North Main Street
New City, NY 10956

Civil Engineer:

RENOVATION OF ROCKLAND GREEN ADMINISTRATIVE HEADQUARTERS AND CONSTRUCTION OF AN IMMERSIVE THEATRE EXPERIENCE

TOWN OF CLARKSTOWN
COUNTY OF ROCKLAND

172 MAIN STREET
NEW CITY, NY 10956

MICHAEL SHILALE ARCHITECTS, L.L.P.
140 Park Avenue New City, NY 10956 Tel 845-708-9200
www.shilale.com

© COPYRIGHT, MICHAEL SHILALE ARCHITECTS, ALL RIGHTS RESERVED.

Drawing Title
ELECTRICAL SECOND FLOOR - INSTALLATION

Drawing No.
E102

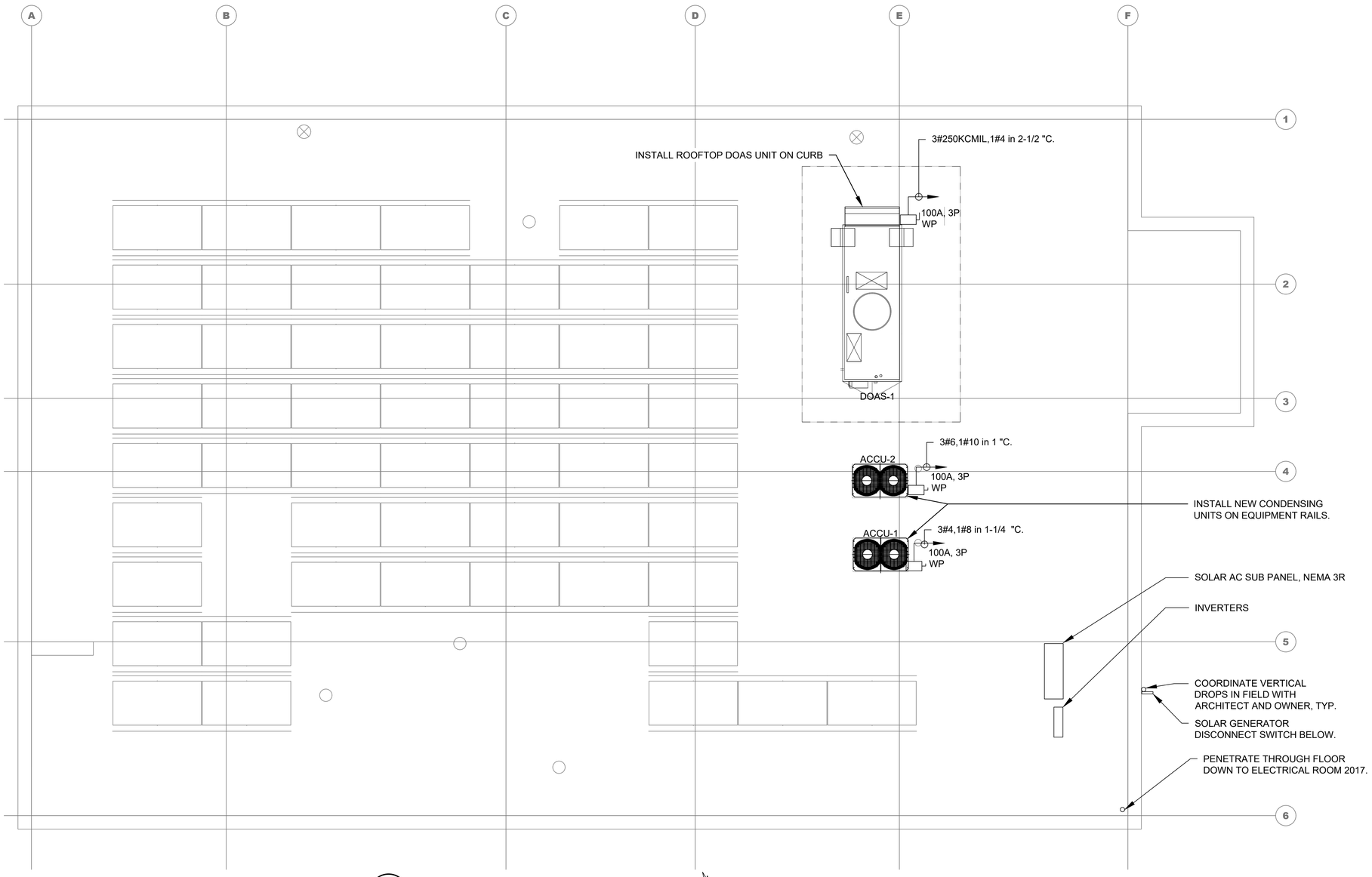

1 / E103 ELECTRICAL ROOF PLAN - INSTALL

SCALE: 1/4" = 1'-0"

PLAN NORTH

PLAN NOTES:

IF THIS BAR DOES NOT MEASURE 1", THEN DRAWING IS NOT TO FULL SCALE

0 1/2 1

1. FOR GENERAL NOTES, ABBREVIATIONS AND ELECTRICAL SYMBOLS, REFER TO DWG. E001.
2. COORDINATE LOCATION OF BASE BUILDING ELECTRICAL PANELS WITH PROPERTY MANAGER.
3. ALL WIRING SHALL BE 2#12 AWG, 1#12 AWG GND IN 3/4" C, U.O.N.
4. CIRCUIT NUMBERS ARE FOR IDENTIFICATION PURPOSES ONLY.
5. UPDATE ALL EXISTING PANELBOARD DIRECTORIES AFFECTED BY NEW WORK. REFER TO PANELBOARD DESIGNATION LEGEND FOR IDENTIFICATION OF PANELBOARDS AND CIRCUITS.
6. CONTRACTOR SHALL MAINTAIN CONTINUITY TO ALL EXISTING CIRCUITRY TO REMAIN WHICH ARE AFFECTED BY THE SCOPE OF WORK; CONTRACTOR SHALL FURNISH ALL NECESSARY JUNCTION BOXES, CONDUIT, AND WIRES ARE REQUIRED.
7. ALL OUTLET LOCATION AND MOUNTING HEIGHTS ARE PER ARCHITECT PLANS AND FIELD CONDITIONS, COORDINATE WITH ARCHITECT.
8. REFER TO MECHANICAL AND PLUMBING PLANS FOR EQUIPMENT TO BE SUPPLIED BY OTHER TRADES AND INSTALLED/WIRED UNDER THIS SECTION. COORDINATE WITH MECHANICAL CONTRACTOR FOR THERMOSTAT LOCATIONS.
9. ALL PENETRATIONS THROUGH FIRE RATED WALLS OR FLOORS SHALL BE SEALED TO PREVENT THE SPREAD OF SMOKE AND FIRE. THE FIRE RATING OF THE PENETRATION SEALING METHOD SHALL MATCH THE RATING OF THE WALL OR FLOOR. USE AN APPROVED SEALING METHOD WHICH IS ACCEPTABLE TO LOCAL JURISDICTION AND APPROVED BY UL.
10. ALL NEW CONDUITS SHALL BE INSTALLED WITH AESTHETICS IN MIND. PAINT ALL NEW EXPOSED CONDUIT AND BOXES TO MATCH EXISTING CONDITIONS.
11. PROVIDE DURA-BLOCK ROOF MOUNTED CONDUIT SUPPORTS OR APPROVED EQUIV.
12. COORDINATE FINAL LOCATION OF ROOF RECEPTACLES IN FIELD WITH MECHANICAL INSTALLATIONS.

SOLAR SYSTEM NOTES:

1. THE PROPOSED SOLAR PANEL LAYOUT IS FOR REFERENCE ONLY. CONTRACTOR SHALL VERIFY THAT THE SOLAR PANEL LAYOUT SHOWN MATCHES LATEST DESIGN GIVEN BY PHOTOVOLTAIC CONTRACTOR.
2. IN THE EVENT THE PROPOSED LAYOUT SHOWN IS DIFFERENT THAN SHOWN, AMENDED, OR ALTERED BY SOLAR PANEL CONTRACTOR, CONTRACTOR SHALL NOTIFY GPI ENGINEERS TO VERIFY ALLOWABLE LOADS ON EXISTING STRUCTURE.
3. REFER TO PANELCLAW PLANS/STRUCTURAL DRAWINGS FOR CALCULATED ADDITIONAL ALLOWABLE DEAD LOADS TO ASSIST IN THE DESIGN OF THE SOLAR PANEL LAYOUT. IN ADDITIONAL LOAD IS REQUIRED, GPI ENGINEERS SHALL BE NOTIFIED IMMEDIATELY.
4. SOLAR PANELS REQUIRING MECHANICAL ATTACHMENTS SHALL BE FASTENED WITH OMG HEAVY DUTY ROOFING FASTENER (#14) SCREWS OR ENGINEER APPROVED EQUIVALENT. LENGTH SHALL BE ASSUMED TO BE 7", BUT SHALL BE FIELD VERIFIED TO FULLY ENGAGE ROOF DECK FOR EACH ATTACHMENT. CONTRACTOR SHALL REFER TO PANELCLAW DRAWINGS FOR DETAILS FOR SOLAR PANEL SUPPORTS & LAYOUT. CONTRACTOR SHALL FIELD TEST OMG HEAVY DUTY ROOFING FASTENER #14 WITH OMG FIELD REPRESENTATIVES FOR ADEQUATE PULL STRENGTH (>300 LBS) PRIOR TO COMPLETING INSTALLATION OF MECHANICAL ATTACHMENTS. IF PULL STRENGTH IS LESS THAN 300 LBS, GPI ENGINEERS SHALL BE NOTIFIED IMMEDIATELY.
5. REFER TO PUREPOWER AND PANELCLAW ROOFTOP SOLAR PHOTOVOLTAIC SYSTEM DRAWINGS FOR ALL POWER DISTRIBUTION ONE LINE AND THREE LINE DRAWINGS. PROVIDE AND INSTALL ALL CONDUIT, WIRING, AND AUXILIARY COMPONENTS NECESSARY FOR A COMPLETE CODE COMPLIANT, FUNCTIONAL SYSTEM INSTALLATION.
6. REFER TO ROOFTOP SOLAR LAYOUT DRAWINGS FOR THE SOLAR ARRAY LAYOUTS.
7. COORDINATE ALL ROOF EQUIPMENT LAYOUT WITH PUREPOWER, THEIR SUB-CONSULTANTS AND THE OWNER PRIOR TO COMMENCING ANY WORK.
8. ALL LABELING AND IDENTIFICATION OF THE NEW SOLAR ELECTRICAL EQUIPMENT SHALL BE PROVIDED AS PER NEC REQUIREMENTS.
9. COORDINATE WITH THE ELECTRICAL UTILITY COMPANY FOR THE REPLACEMENT OF EXISTING UTILITY METER WITH NEW BIDIRECTIONAL METER, AS NECESSARY.
10. PROVIDE POWER SUPPLY FOR THE DAS SYSTEM. UTILIZE A 1P, 20A CIRCUIT IN COMPUTER PANEL LOCATED IN STORAGE 206C.

No.	Date	Revisions
0	02-18-25	RFP SET

Drawn by JL
Checked by SH
Project No. 40034G
Scale
Date 02/18/2025

GREENMAN PEDERSEN, INC
2 EXECUTIVE BOULEVARD
SUITE 202
SUFFERN, NY 10901

Mechanical, Electrical & Structural Engineer:

ATZL, NASHER, & ZIGLER
234 North Main Street
New City, NY 10956

Civil Engineer:

RENOVATION OF ROCKLAND GREEN ADMINISTRATIVE HEADQUARTERS AND CONSTRUCTION OF AN IMMERSIVE THEATRE EXPERIENCE

TOWN OF CLARKSTOWN
COUNTY OF ROCKLAND

175 MAIN STREET
NYACK, NY 10994

MICHAEL SHILALE ARCHITECTS, L.L.P.
140 Park Avenue New City, NY 10956 Tel 845-708-9200
www.shilale.com

© COPYRIGHT, MICHAEL SHILALE ARCHITECTS, ALL RIGHTS RESERVED.

Drawing Title
ELECTRICAL ROOF PLAN - INSTALLATION

Drawing No.
E103

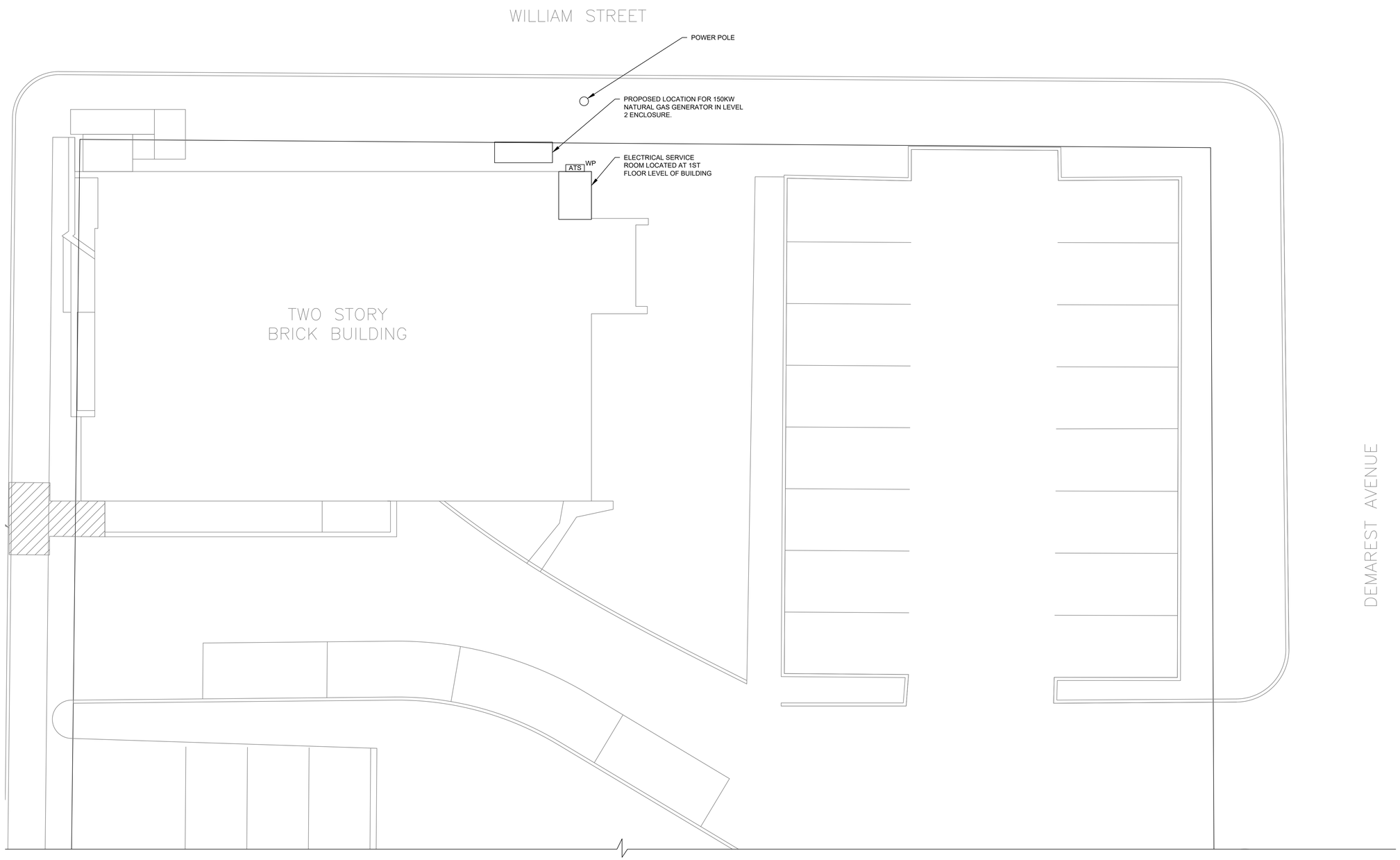

1 / E104 ELECTRICAL SITE PLAN - INSTALL

SCALE: 1/8" = 1'-0"

PLAN NORTH

PLAN NOTES:

1. ANY UTILITY SHOWN ON PLANS ARE BASED ON OBSERVATION AT THE SURFACE LEVEL ONLY. THE CONTRACTOR SHALL PROVIDE TONE-OUT/UTILITY LOCATING SERVICES PRIOR TO COMMENCING EXCAVATION IN ANY WORK AREAS.

0 1/2 1
IF THIS BAR DOES NOT MEASURE 1", THEN DRAWING IS NOT TO FULL SCALE

No.	Date	Revisions
0	02-18-25	RFP SET

Drawn by JL
Checked by SH
Project No. 40034G
Scale AS SHOWN
Date 02/18/2025

Mechanical, Electrical & Structural Engineer: GREENMAN PEDERSEN, INC
2 EXECUTIVE BOULEVARD
SUFFERN, NY 10901

Civil Engineer: ATZL, NASHER, & ZIGLER
234 North Main Street
New City, NY 10956

RENOVATION OF ROCKLAND GREEN ADMINISTRATIVE HEADQUARTERS AND CONSTRUCTION OF AN IMMERSIVE THEATRE EXPERIENCE

TOWN OF CLARKSTOWN
COUNTY OF ROCKLAND

175 MAIN STREET
NANUET, NY 10954

MICHAEL SHILALE ARCHITECTS, L.L.P.
140 Park Avenue New City, NY 10956 Tel 845-708-8200
www.shilale.com

© COPYRIGHT, MICHAEL SHILALE ARCHITECTS, ALL RIGHTS RESERVED.

Drawing Title
ELECTRICAL SITE PLAN

Drawing No.
E104

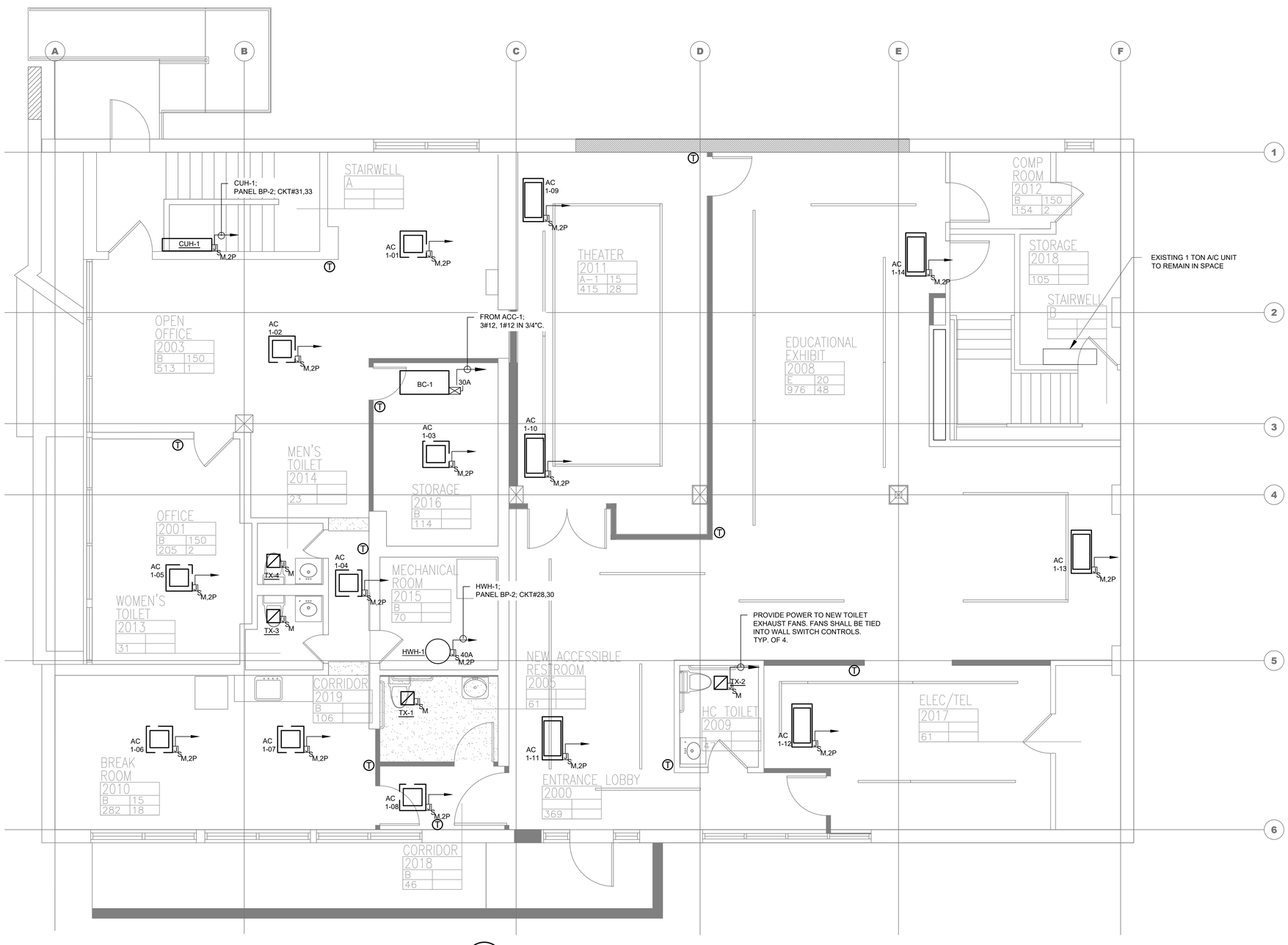

1 / E111 ELECTRICAL FIRST FLOOR PLAN - INSTALL

SCALE: 1/4" = 1'-0"

PLAN NOTES:

1. FOR GENERAL NOTES, ABBREVIATIONS AND ELECTRICAL SYMBOLS, REFER TO DWG. E001.
2. COORDINATE LOCATION OF BASE BUILDING ELECTRICAL PANELS WITH PROPERTY MANAGER.
3. ALL WIRING SHALL BE 2#12 AWG, 1#12 AWG GND IN 3/4" C, U.O.N.
4. CIRCUIT NUMBERS ARE FOR IDENTIFICATION PURPOSES ONLY.
5. UPDATE ALL EXISTING PANELBOARD DIRECTORIES AFFECTED BY NEW WORK. REFER TO PANELBOARD DESIGNATION LEGEND FOR IDENTIFICATION OF PANELBOARDS AND CIRCUITS.
6. CONTRACTOR SHALL MAINTAIN CONTINUITY TO ALL EXISTING CIRCUITRY TO REMAIN WHICH ARE AFFECTED BY THE SCOPE OF WORK; CONTRACTOR SHALL FURNISH ALL NECESSARY JUNCTION BOXES, CONDUIT, AND WIRES ARE REQUIRED.
7. ALL OUTLET LOCATION AND MOUNTING HEIGHTS ARE PER ARCHITECT PLANS AND FIELD CONDITIONS, COORDINATE WITH ARCHITECT.
8. REFER TO MECHANICAL AND PLUMBING PLANS FOR EQUIPMENT TO BE SUPPLIED BY OTHER TRADES AND INSTALLED/WIRED UNDER THIS SECTION. COORDINATE WITH MECHANICAL CONTRACTOR FOR THERMOSTAT LOCATIONS.
9. PROVIDE 120V CKT FOR CONTROL PANEL SERVING MECHANICAL EQUIPMENT.
10. REFER TO MECHANICAL SCHEDULES AND ELECTRICAL PANEL SCHEDULES FOR POWER REQUIREMENTS TO EQUIPMENT ON PLAN.

0 1/2 1
IF THIS BAR DOES NOT MEASURE 1", THEN DRAWING IS NOT TO FULL SCALE

No.	Date	Revisions
0	02-18-25	RFP SET

Drawn by JL
Checked by AL
Project No. 40034G
Scale
Date 02/18/2025

GREENMAN PEDERSEN, INC
2 EXECUTIVE BOULEVARD
SUITE 202
SUFFERN, NY 10901

Mechanical, Electrical & Structural Engineer:

ATZL, NASHER, & ZIGLER
234 North Main Street
New City, NY 10956

Civil Engineer:

RENOVATION OF ROCKLAND GREEN ADMINISTRATIVE HEADQUARTERS AND CONSTRUCTION OF AN IMMERSIVE THEATRE EXPERIENCE

TOWN OF CLARKSTOWN
COUNTY OF ROCKLAND

175 MAIN STREET
NYACK, NY 10994

MICHAEL SHILALE ARCHITECTS, L.L.P.
140 Park Avenue New City, NY 10956 Tel 845-709-8200
www.shilale.com

© COPYRIGHT, MICHAEL SHILALE ARCHITECTS, ALL RIGHTS RESERVED.

Drawing Title
ELECTRICAL FIRST FLOOR EQUIPMENT - INSTALLATION

Drawing No.
E111

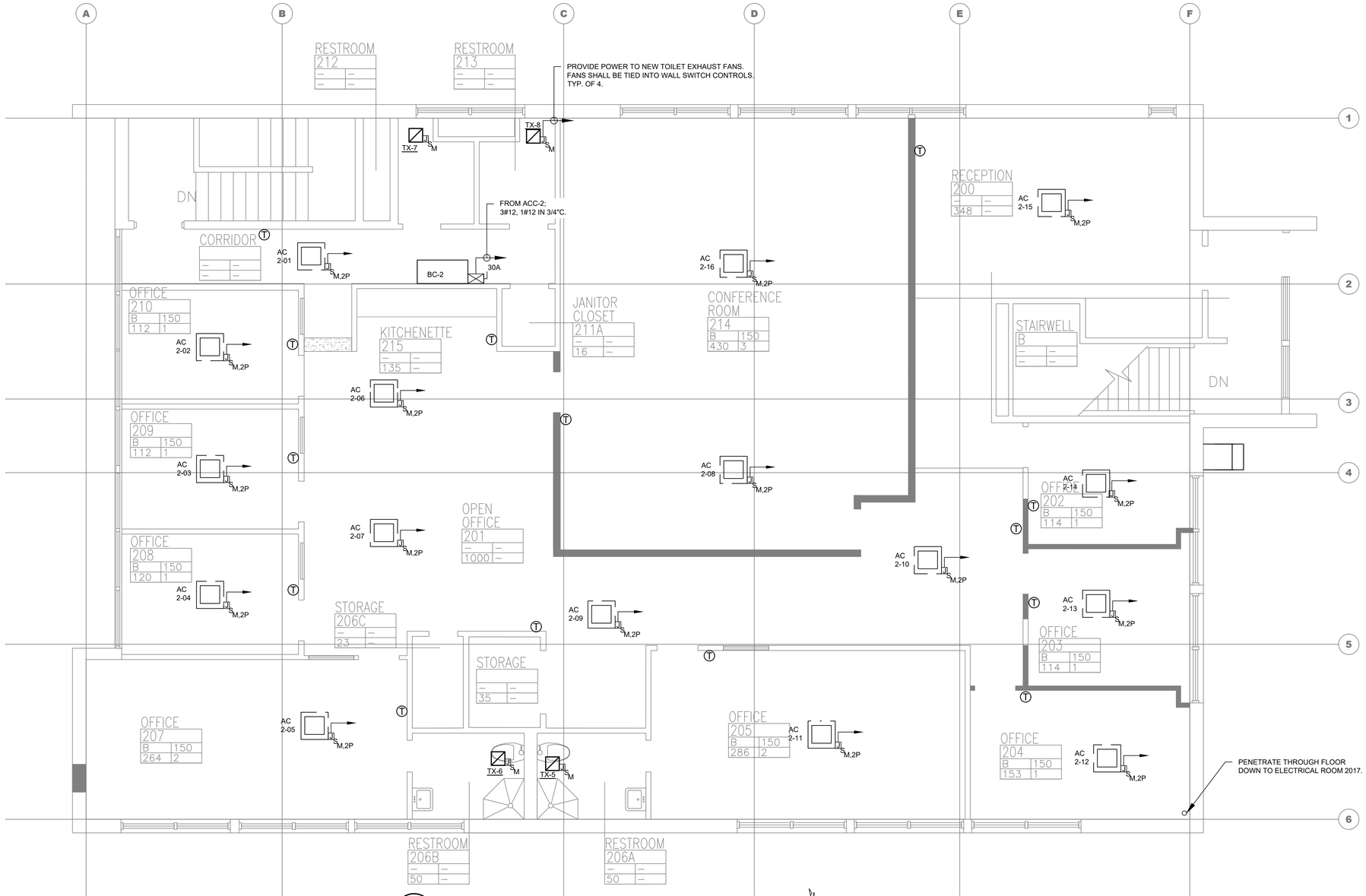

1 / E112 ELECTRICAL SECOND FLOOR PLAN - INSTALL

SCALE: 1/4" = 1'-0"

PLAN NOTES:

1. FOR GENERAL NOTES, ABBREVIATIONS AND ELECTRICAL SYMBOLS, REFER TO DWG. E001.
2. COORDINATE LOCATION OF BASE BUILDING ELECTRICAL PANELS WITH PROPERTY MANAGER.
3. ALL WIRING SHALL BE 2#12 AWG, 1#12 AWG GND IN 3/4" C, U.O.N.
4. CIRCUIT NUMBERS ARE FOR IDENTIFICATION PURPOSES ONLY.
5. UPDATE ALL EXISTING PANELBOARD DIRECTORIES AFFECTED BY NEW WORK. REFER TO PANELBOARD DESIGNATION LEGEND FOR IDENTIFICATION OF PANELBOARDS AND CIRCUITS.
6. CONTRACTOR SHALL MAINTAIN CONTINUITY TO ALL EXISTING CIRCUITRY TO REMAIN WHICH ARE AFFECTED BY THE SCOPE OF WORK; CONTRACTOR SHALL FURNISH ALL NECESSARY JUNCTION BOXES, CONDUIT, AND WIRES ARE REQUIRED.
7. ALL OUTLET LOCATION AND MOUNTING HEIGHTS ARE PER ARCHITECT PLANS AND FIELD CONDITIONS, COORDINATE WITH ARCHITECT.
8. REFER TO MECHANICAL AND PLUMBING PLANS FOR EQUIPMENT TO BE SUPPLIED BY OTHER TRADES AND INSTALLED/WIRED UNDER THIS SECTION. COORDINATE WITH MECHANICAL CONTRACTOR FOR THERMOSTAT LOCATIONS.
9. PROVIDE 120V CKT FOR CONTROL PANEL SERVING MECHANICAL EQUIPMENT.
10. REFER TO MECHANICAL SCHEDULES AND ELECTRICAL PANEL SCHEDULES FOR POWER REQUIREMENTS TO EQUIPMENT ON PLAN.

0 1/2 1
IF THIS BAR DOES NOT MEASURE 1", THEN DRAWING IS NOT TO FULL SCALE

No.	Date	Revisions
0	02-18-25	RFP SET

Drawn by JL
Checked by AL
Project No. 40034G
Scale
Date 02/18/2025

Mechanical, Electrical & Structural Engineer: GREENMAN PEDERSEN, INC
2 EXECUTIVE BOULEVARD
SUITE 202
SUFFERN, NY 10901

Civil Engineer: ATZL, NASHER, & ZIGLER
234 North Main Street
New City, NY 10956

RENOVATION OF ROCKLAND GREEN ADMINISTRATIVE HEADQUARTERS AND CONSTRUCTION OF AN IMMERSIVE THEATRE EXPERIENCE

TOWN OF CLARKSTOWN
COUNTY OF ROCKLAND

175 MAIN STREET
HAVERSTRAW, NY 10927

MICHAEL SHILALE ARCHITECTS, L.L.P.
140 Park Avenue New City, NY 10956 Tel 845-708-9200
www.shilale.com

© COPYRIGHT, MICHAEL SHILALE ARCHITECTS, ALL RIGHTS RESERVED.

Drawing Title
ELECTRICAL SECOND FLOOR EQUIPMENT - INSTALLATION

Drawing No.
E112

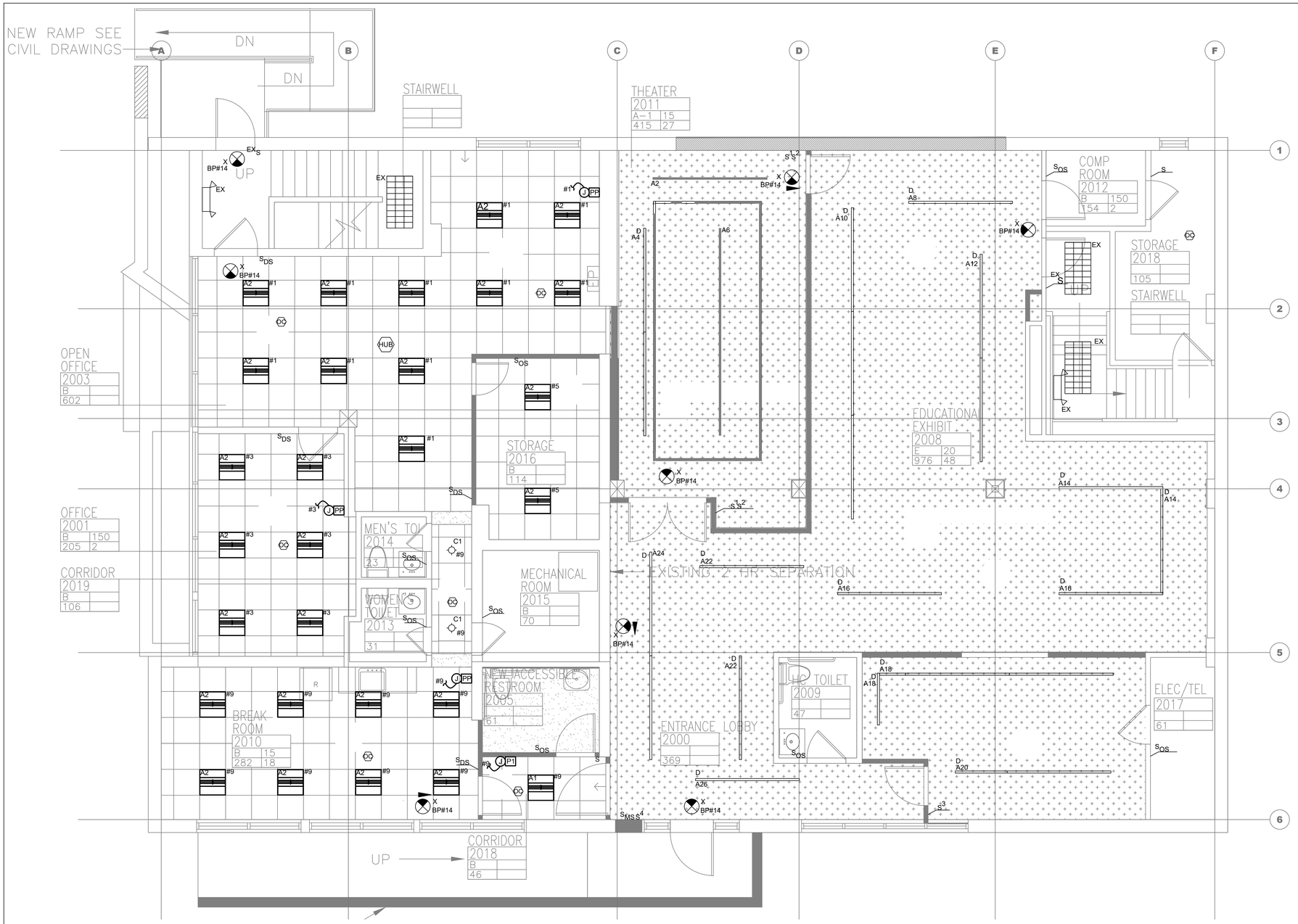

1 E201 ELECTRICAL FIRST FLOOR PLAN - INSTALL

SCALE: 1/4" = 1'-0"

PLAN NORTH

PLAN NOTES:

1. FOR GENERAL NOTES, ABBREVIATIONS AND ELECTRICAL SYMBOLS, REFER TO DWG. E001.
2. COORDINATE LOCATION OF BASE BUILDING ELECTRICAL PANELS WITH PROPERTY MANAGER.
3. ALL WIRING SHALL BE 2#12 AWG, 1#12 AWG GND IN 3/4" C, U.O.N.
4. CIRCUIT NUMBERS ARE FOR IDENTIFICATION PURPOSES ONLY.
5. UPDATE ALL EXISTING PANELBOARD DIRECTORIES AFFECTED BY NEW WORK. REFER TO PANELBOARD DESIGNATION LEGEND FOR IDENTIFICATION OF PANELBOARDS AND CIRCUITS.
6. CONTRACTOR SHALL MAINTAIN CONTINUITY TO ALL EXISTING CIRCUITRY TO REMAIN WHICH ARE AFFECTED BY THE SCOPE OF WORK; CONTRACTOR SHALL FURNISH ALL NECESSARY JUNCTION BOXES, CONDUIT, AND WIRES ARE REQUIRED.
7. ALL OUTLET LOCATION AND MOUNTING HEIGHTS ARE PER ARCHITECT PLANS AND FIELD CONDITIONS, COORDINATE WITH ARCHITECT.
8. ALL DATA CABLING TO BE BY SYSTEMS VENDOR; COORDINATE LOCATIONS/ROUTING WITH CABLING VENDOR. REFER TO DWG. E203 FOR LIGHTING CONTROL DEVICE WIRING DIAGRAM INFORMATION. REFER TO WHIRLWIND CREATIVE WIRING DIAGRAM FOR THEATER AND EXHIBIT SPACE LIGHTING REQUIREMENTS.
9. EXTERIOR 150KW GENERATOR SHALL PROVIDE POWER THE ENTIRE BUILDING (INCLUDING LIGHTING) IN THE EVENT OF POWER LOSS. PROVIDE ALL EXIT SIGNS ON SAME CKT.
10. UTILIZE PANEL PP-1 (#X) AND PANEL BP-1(BP#X) TO ENERGIZE ALL LIGHTING CIRCUIT(S) IN AREA OF WORK, U.O.N. PROVIDE NEW LIGHTING CONTROLS AS INDICATED.
11. PROVIDE DAYLIGHT HARVESTING CONTROLS WHERE REQUIRED. NEW CONTROLS SHALL BE WIRELESS. CONTRACTOR SHALL PROVIDE SYSTEM THAT INCLUDES A HUB, CEILING MOUNTED OCCUPANCY/VACANCY/PHOTO SENSORS, POWER PACKS, WALL SWITCHES AND ALL ANCILLARY COMPONENTS AS REQUIRED FOR A COMPLETE SYSTEM INSTALLATION. COORDINATE ADDITIONAL REQUIREMENTS WITH APPROVED SYSTEM MANUFACTURER. REFER TO E203 FOR ADDITIONAL INFORMATION.

0 1/2 1
IF THIS BAR DOES NOT MEASURE 1", THEN DRAWING IS NOT TO FULL SCALE

LIGHT FIXTURE SCHEDULE						
SYMBOL	DESCRIPTION	MANUFACTURER	MODEL NUMBER	WATTS	LUMENS	LLF
A1	2 X 2 LINEAR LED LIGHT FIXTURE	ELITE	22-EDGE-LED-4000L-DIM10-MVOLT-35K-85	41.3	4261	0.900
A2	2 X 2 LINEAR LED LIGHT FIXTURE	ELITE	22-EDGE-LED-3000L-DIM10-MVOLT-35K-85	29.6	3196	0.900
A3	2 X 2 LINEAR LED LIGHT FIXTURE	ELITE	22-EDGE-LED-2000L-DIM10-MVOLT-35K-85	19.1	2086	0.900
B1	4" DIA. RECESSED DOWNLIGHT	ELITE	HH4-LED-1500L-DIM10-MVOLT-WD-35K-90-HH4-4501-CL-WH	20	1494	0.850
C1	6" DIA. RECESSED DOWNLIGHT	ELITE	HH6-LED-2000L-DIM10-MVOLT-WD-40K-90-HH6-6501-CL-WH	22.7	2013	0.900
D	TRACK LIGHTING	TIME SQUARE LIGHTING TIME SQUARE LIGHTING VIVID	TRACK: SINGLE CIRCUIT 120V TRACK TRACK LIGHT: SB30 LAMP: SORRA VIVID PAR30S, E26 LAMP	18.5 / LAMP		
X	EDGE-LIT LED EXIT SIGN (GREEN)	COMPASS	CEL-R1/R2-G-NE	2.94		

ADDITIONAL NOTES:
1. CONTRACTOR TO VERIFY QUANTITY AND TYPE OF ALL FIXTURES AND ASSOCIATED DRIVERS IN FIELD.
2. COORDINATE WITH MANUFACTURERS FOR ALL ANCILLARY COMPONENTS REQUIRED FOR FIXTURES WITH 0-10V DIMMING REQUIREMENTS.
3. PROVIDE FIXTURE D WITH ALL ANCILLARY COMPONENTS REQUIRED FOR FULL TRACK LIGHT FIXTURE INSTALLATION. PROVIDE LAMP WITH ECOSENSE SNAP SYSTEM ACCESSORIES; COORDINATE REQUIREMENTS WITH ARCHITECT.

No.	Date	Revisions
0	02-18-25	RFP SET

Drawn by JL
Checked by SH
Project No. 40034G
Scale
Date 02/18/2025

GREENMAN PEDERSEN, INC
2 EXECUTIVE BOULEVARD
SUITE 202
SUFFERN, NY 10901
Mechanical, Electrical & Structural Engineer:

ATZL, NASHER, & ZIGLER
234 North Main Street
New City, NY 10956
Civil Engineer:

RENOVATION OF ROCKLAND GREEN ADMINISTRATIVE HEADQUARTERS AND CONSTRUCTION OF AN IMMERSIVE THEATRE EXPERIENCE
TOWN OF CLARKSTOWN
COUNTY OF ROCKLAND
175 MAIN STREET
NEW HAVEN, CT 07004

MICHAEL SHILALE ARCHITECTS, L.L.P.
140 Park Avenue New City, NY 10956 Tel 845-709-8200
www.shilale.com

© COPYRIGHT, MICHAEL SHILALE ARCHITECTS, ALL RIGHTS RESERVED.

Drawing Title
ELECTRICAL FIRST FLOOR RCP -INSTALLATION

Drawing No.
E201

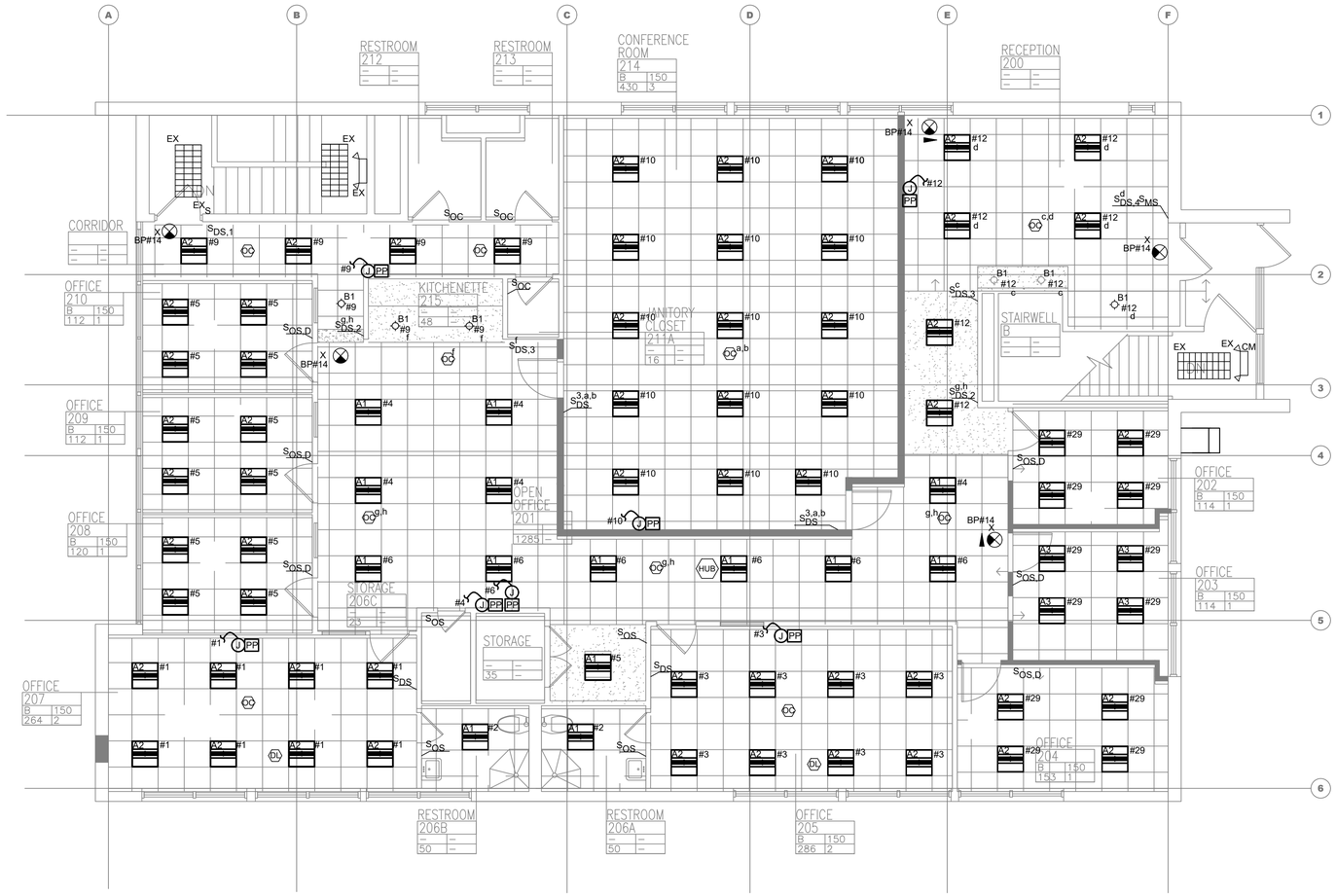

1 / E202 ELECTRICAL SECOND FLOOR PLAN - INSTALL

SCALE: 3/16" = 1'-0"

PLAN NORTH

PLAN NOTES:

1. FOR GENERAL NOTES, ABBREVIATIONS AND ELECTRICAL SYMBOLS, REFER TO DWG. E001.
2. COORDINATE LOCATION OF BASE BUILDING ELECTRICAL PANELS WITH PROPERTY MANAGER.
3. ALL WIRING SHALL BE 2#12 AWG, 1#12 AWG GND IN 3/4" C, U.O.N.
4. CIRCUIT NUMBERS ARE FOR IDENTIFICATION PURPOSES ONLY.
5. UPDATE ALL EXISTING PANELBOARD DIRECTORIES AFFECTED BY NEW WORK. REFER TO PANELBOARD DESIGNATION LEGEND FOR IDENTIFICATION OF PANELBOARDS AND CIRCUITS.
6. CONTRACTOR SHALL MAINTAIN CONTINUITY TO ALL EXISTING CIRCUITRY TO REMAIN WHICH ARE AFFECTED BY THE SCOPE OF WORK; CONTRACTOR SHALL FURNISH ALL NECESSARY JUNCTION BOXES, CONDUIT, AND WIRES ARE REQUIRED.
7. ALL OUTLET LOCATION AND MOUNTING HEIGHTS ARE PER ARCHITECT PLANS AND FIELD CONDITIONS, COORDINATE WITH ARCHITECT.
8. ALL DATA CABLING TO BE BY SYSTEMS VENDOR; COORDINATE LOCATIONS/ROUTING WITH CABLING VENDOR. REFER TO DWG. E203 FOR LIGHTING CONTROL DEVICE WIRING DIAGRAM INFORMATION.
9. EXTERIOR 150KW GENERATOR SHALL PROVIDE POWER THE ENTIRE BUILDING (INCLUDING LIGHTING) IN THE EVENT OF POWER LOSS. PROVIDE ALL EXIT SIGNS ON SAME CKT.
10. UTILIZE PANEL PP-2 (#X) AND PANEL BP-1(BP#X) TO ENERGIZE ALL LIGHTING CIRCUIT(S) IN AREA OF WORK, U.O.N. PROVIDE NEW LIGHTING CONTROLS AS INDICATED.
11. PROVIDE DAYLIGHT HARVESTING CONTROLS WHERE REQUIRED. NEW CONTROLS SHALL BE WIRELESS. CONTRACTOR SHALL PROVIDE SYSTEM THAT INCLUDES A HUB, CEILING MOUNTED OCCUPANCY/VACANCY/PHOTO SENSORS, POWER PACKS, WALL SWITCHES AND ALL ANCILLARY COMPONENTS AS REQUIRED FOR A COMPLETE SYSTEM INSTALLATION. COORDINATE ADDITIONAL REQUIREMENTS WITH APPROVED SYSTEM MANUFACTURER. REFER TO E203 FOR ADDITIONAL INFORMATION.

0 1/2 1
IF THIS BAR DOES NOT MEASURE 1", THEN DRAWING IS NOT TO FULL SCALE

LIGHT FIXTURE SCHEDULE

SYMBOL	DESCRIPTION	MANUFACTURER	MODEL NUMBER	WATTS	LUMENS	LLF
A1	2 X 2 LINEAR LED LIGHT FIXTURE	ELITE	22-EDGE-LED-4000L-DIM10-MVOLT-35K-85	41.3	4261	0.900
A2	2 X 2 LINEAR LED LIGHT FIXTURE	ELITE	22-EDGE-LED-3000L-DIM10-MVOLT-35K-85	29.6	3196	0.900
A3	2 X 2 LINEAR LED LIGHT FIXTURE	ELITE	22-EDGE-LED-2000L-DIM10-MVOLT-35K-85	19.1	2086	0.900
B1	4" DIA. RECESSED DOWNLIGHT	ELITE	HH4-LED-1500L-DIM10-MVOLT-WD-35K-90-HH4-4501-CL-WH	20	1494	0.850
C1	6" DIA. RECESSED DOWNLIGHT	ELITE	HH6-LED-2000L-DIM10-MVOLT-WD-40K-90-HH6-6501-CL-WH	22.7	2013	0.900
X	EDGE-LIT LED EXIT SIGN (GREEN)	COMPASS	CEL-R1/R2-G-NE	2.94		

ADDITIONAL NOTES:
1. CONTRACTOR TO VERIFY QUANTITY AND TYPE OF ALL FIXTURES AND ASSOCIATED DRIVERS IN FIELD.
2. COORDINATE WITH MANUFACTURERS FOR ALL ANCILLARY COMPONENTS REQUIRED FOR FIXTURES WITH 0-10V DIMMING REQUIREMENTS.

No.	Date	Revisions
0	02-18-25	RFP SET

Drawn by JL
Checked by SH
Project No. 40034G
Scale
Date 02/18/2025

Mechanical, Electrical & Structural Engineer: GREENMAN PEDERSEN, INC
2 EXECUTIVE BOULEVARD
SUITE 202
SUFFERN, NY 10901

Civil Engineer: ATZL, NASHER, & ZIGLER
234 North Main Street
New City, NY 10956

RENOVATION OF ROCKLAND GREEN ADMINISTRATIVE HEADQUARTERS AND CONSTRUCTION OF AN IMMERSIVE THEATRE EXPERIENCE
TOWN OF CLARKSTOWN
COUNTY OF ROCKLAND
172 MAIN STREET
NANUET, NY 10954

MICHAEL SHILALE ARCHITECTS, L.L.P.
140 Park Avenue New City, NY 10956 Tel 845-708-9200
www.shilale.com

© COPYRIGHT, MICHAEL SHILALE ARCHITECTS, ALL RIGHTS RESERVED.

Drawing Title
ELECTRICAL SECOND FLOOR RCP -INSTALLATION

Drawing No.
E202

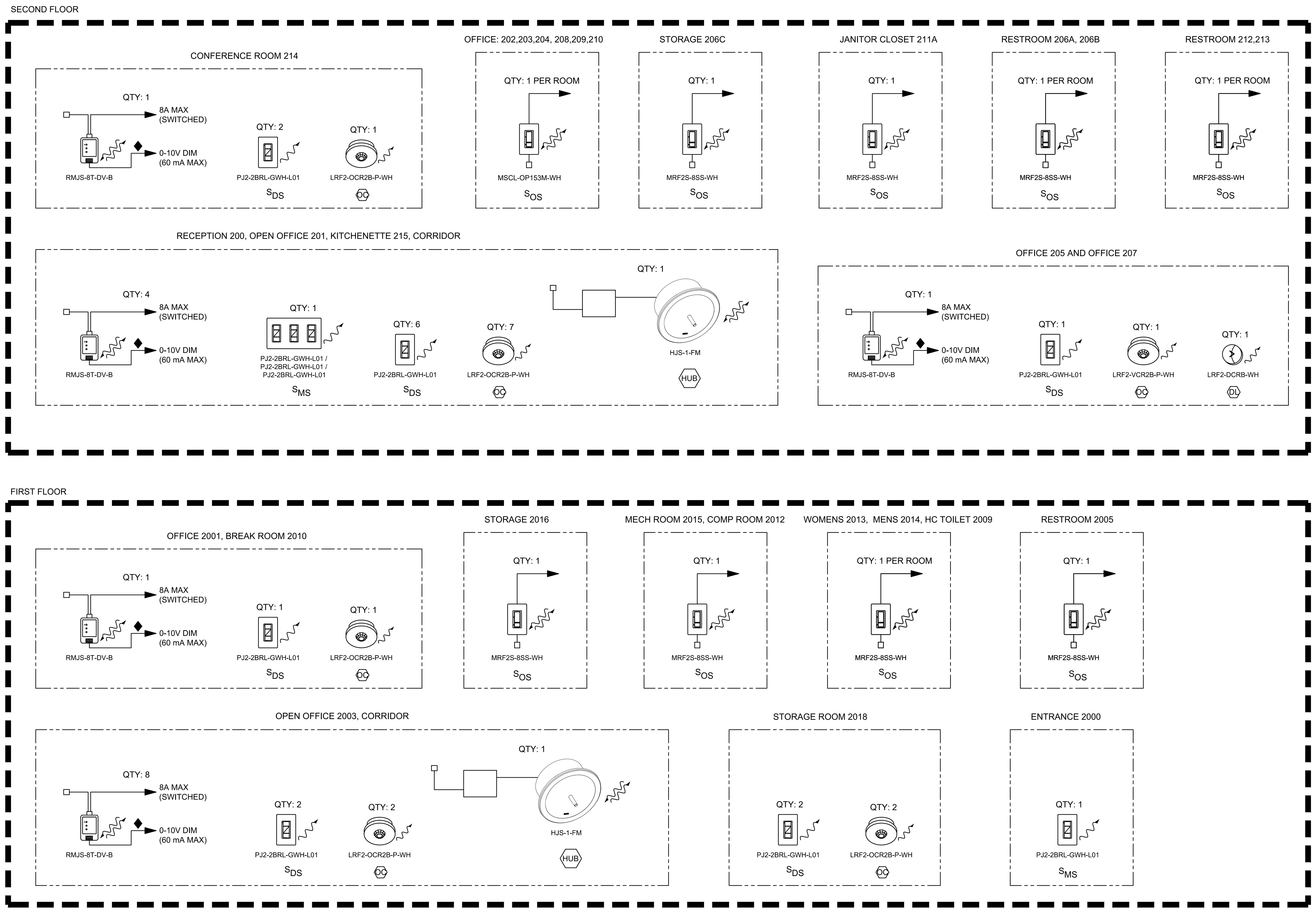

△Q DEVICES IN THE SAME DOTTED-LINE BOX ARE TO BE CONNECTED ON THE SAME QS CONTROL LINK. CONSULT THE ONE-LINE DIAGRAM FOR DETAILED DEVICE WIRING ORDER AND TOPOLOGY.

QS WIRING AS REQUIRED BY CONTROL LINK LENGTH
(REFER TO QS SMART PANEL POWER SUPPLY WIRING GUIDE FOR SHADE WIRING NOTES):

TOTAL CONTROL LINK LENGTH	WIRE GAUGE	AVAILABLE FROM LUTRON IN ONE CABLE:
LESS THAN 500ft (152,4 m)	POWER (TERMINALS 1&2): 1 PAIR 18 AWG (1,0 mm²)	GRX-CBL-346S (NON-PLENUM) OR GRX-PCBL-346S (PLENUM)
	DATA (TERMINALS 3&4): 1 PAIR 22 AWG (0.5 mm²), TWISTED AND SHIELDED*	
500ft (152.4 m) TO 2,000ft (610 m)**	POWER (TERMINALS 1&2): 1 PAIR 12 AWG (4.0 mm²)	GRX-CBL-46L (NON-PLENUM) OR GRX-PCBL-46L (PLENUM)
	DATA (TERMINALS 3&4): 1 PAIR 22 AWG (0.5 mm²), TWISTED AND SHIELDED*	

*ALTERNATE DATA-ONLY CABLE: USE APPROVED DATA LINK CABLE (22 AWG [0.5 mm²] TWISTED/SHIELDED) FROM BELDEN (MODEL # 9461).

**TOTAL LENGTH OF THE QS LINK MUST NOT EXCEED 2,000 ft (600 m).

- INPUT POWER (NORMAL-EMERGENCY)
- INPUT POWER (NORMAL)
- 2 #12AWG (4 mm²)
- 3 #12AWG (4 mm²)
- 0-10V SIGNAL: 2 #18AWG (1.0 mm
- CAT5E OR BETTER CABLE FOR LUTRON NETWORK TERMINATED WITH RJ45 CONNECTORS (TO BE PROVIDED BY OTHERS). 328 ft (100 m) MAXIMUM RUN.
- 1-WAY RF COMMUNICATION
- 2-WAY RF COMMUNICATION
- LUTRON SENSOR CABLE C-CBL-522S OTHERWISE USE 3 #22 AWG (1.0 mm²)
- LUTRON SENSOR CABLE C-CBL-522S OTHERWISE USE 4 #22 AWG (1.0 mm²)

Wiring Notes:

QS LINK RULES
THE FOLLOWING LINK RULES MUST BE OBSERVED FOR PROPER OPERATION:

- THIS IS A TOPOLOGY-FREE LINK (T-TAP, HOME-RUN, ETC. IS OK); REFER TO TABLE BELOW FOR WIRE RUN LIMITS.
- IF WIRED DIFFERENTLY THAN WHAT IS SHOWN, POWER DRAW UNIT REQUIREMENTS NEED TO BE CONFIRMED; SEE POWER DRAW UNITS (PDUs) SPECIFICATION SHEET INCLUDED IN THIS SUBMITTAL.
- MAXIMUM OF 512 OUTPUTS (BALLASTS, SHADES, CONTACT CLOSURES, ETC).
- MAXIMUM OF 100 OCCUPANCY SENSORS, 100 DAYLIGHT SENSORS/RADIO SHADOW SENSORS AND 100 KEYPADS.
- MAXIMUM OF 100 QS DEVICES (SUCH AS A GRAFIK EYE® QS, SEETOUCH® QS KEYPAD, SMART PANEL POWER SUPPLY [QSPS-Px-10-60], ESN, OR SIVOIA® QS SHADE / DRAPERY DRIVE UNIT). QUANTUM PROCESSOR COUNTS AS 1 DEVICE PER LINK.
- MAXIMUM OF 100 ZONES - SUCH AS A SIVOIA QS SHADE / DRAPERY DRIVE UNIT, OR A LIGHTING ZONE ON A GRAFIK EYE QS (DOES NOT APPLY TO QUANTUM SYSTEMS).
- THE 10 OUTPUTS ON A QSPS-Px-10-60 CANNOT EXCEED A COMBINED LENGTH OF 2,000 ft (600 m).

GENERATED RISER REPORT DOES NOT INCLUDE ANY POWER INFORMATION, THESE DETAILS CAN BE FOUND IN ONE-LINE REPORT.

CONCEPT DRAWING NOTES:
CONTROL SYSTEM DRAWING IS PROVIDED FOR CONCEPTUAL PURPOSES ONLY AND IS NOT INTENDED FOR CONSTRUCTION. EXACT EQUIPMENT REQUIREMENTS, INCLUDING LOCATIONS AND QUANTITIES, SHOULD BE VERIFIED IN ACCORDANCE WITH THE MOST UP-TO-DATE LIGHTING/ELECTRICAL REFLECTED CEILING PLANS, LIGHTING FIXTURE SCHEDULES, PANEL SCHEDULES, CONTROL INTENT AND SPECIFICATIONS. SHADE EQUIPMENT SHOULD BE VERIFIED IN ACCORDANCE WITH ARCHITECTURAL PLANS, SPECIFICATIONS AND WINDOW SCHEDULES/DETAILS.

LED DIMMING REQUIRES AN EXACT MATCH BETWEEN THE LED ARRAY, DRIVER AND CONTROL. LUTRON CANNOT GUARANTEE COMPATIBILITY OR PERFORMANCE WITHOUT TESTING THIS COMBINATION.

TO CONFIRM WHAT PRODUCTS LUTRON HAS AVAILABLE OR WHAT INTERFACES MAY BE REQUIRED, CALL 1-877-DIM-LED8 OR CHECK LUTRON'S PRODUCT COMPATIBILITY MATRIX ON-LINE AT WWW.LUTRON.COM/LED.

TO REQUEST THE TESTING OF AN LED PRODUCT BY LUTRON MANUFACTURERS CAN FILL OUT AN LED EVALUATION REQUEST FORM ON-LINE AT WWW.LUTRON.COM/LED OR CONTACT LEDS@LUTRON.COM.

LUTRON CAN GUARANTEE COMPATIBILITY AND PERFORMANCE OF LUTRON HI-LUME LED DRIVERS USED WITH APPROPRIATE LUTRON CONTROLS. PLEASE REFER TO THE SPECIFICATION SUBMITTAL SHEET FOR FURTHER INFORMATION.

IF USING UNTESTED, NON-LUTRON LED DRIVERS REQUIRING 0-10V CONTROL, PERFORMANCE AND COMPATIBILITY CANNOT BE GUARANTEED BY LUTRON. PRODUCTS FOLLOWING THE IEC STANDARD 60929 ARE MORE LIKELY TO PROVIDE ACCEPTABLE PERFORMANCE RESULTS. DETERMINATION OF RESULT ACCEPTABILITY IS UP TO THE USER'S DISCRETION.

IF USING UNTESTED, NON-LUTRON LED DRIVERS REQUIRING PHASE CONTROL, PERFORMANCE AND COMPATIBILITY CANNOT BE GUARANTEED BY LUTRON. HI-LUME OR ELV PRODUCTS PROVIDING HIGH END AND LOW END TRIM ADJUSTMENTS ARE MORE LIKELY TO PROVIDE ACCEPTABLE PERFORMANCE RESULTS. DETERMINATION OF RESULT ACCEPTABILITY IS UP TO THE USER'S DISCRETION.

1 / E203 — ELECTRICAL - LIGHTING CONTROL SYSTEM
SCALE: NONE

DYNAMIC RISER DIAGRAM

GENERAL NOTES

1. REFER TO SUBMITTAL SYSTEM LAYOUT REPORT AND ONE-LINE (IF AVAILABLE) FOR DEVICE WIRING INFORMATION AND DETAILS. OBTAIN DOCUMENTS FROM APPROVED SYSTEM MANUFACTURER.
2. REFER TO PANEL AND FIXTURE SCHEDULES FOR ADDITIONAL LOAD INFORMATION.
3. REFER TO SUBMITTAL SYSTEM LAYOUT OR LOOP SCHEDULE REPORTS FOR MORE INFORMATION ABOUT FIXTURES ON THE DIGITAL LOOP
4. PROVIDE LUTRON HOMEWORKS QSX PROCESSOR, OR MANUFACTURER RECOMMENDED DIMMING CONTROL PACKAGE COMPATIBLE FOR SEAMLESS INTEGRATION WITH CRESTRON SYSTEM CONTROLS FOR THE THEATER AND EXHIBIT SPACE. PROVIDE ALL REQUIRED SWITCHES, MODULES, AND ANCILLARY DEVICES AS REQUIRED FOR THEATER AND EXHIBIT SPACE LIGHTING CONTROLS. FINAL DIMMING CONTROLS PACKAGE SHALL BE BY LUTRON IN COLLABORATION WITH CRESTRON.

LUTRON SERVICES

QTY	SERVICE TITLE (MODEL NUMBER)	SERVICE DESCRIPTION
	THE QUANTITY OF SERVICES BELOW ARE TO BE INCLUDED AS PART OF THIS PROJECT'S SCOPE OF WORK AND SPECIFIED INTO THE WRITTEN SPEC DOCUMENTS	
	PRE-STARTUP ELECTIVE SERVICES	
	REMOTE PRE-WIRE SESSION (LSC-PREWIRE-RMTE)	A REMOTE SESSION WHERE THE LUTRON FIELD SERVICE ENGINEER REVIEWS THE LUTRON SUBMITTAL PACKAGE (PARTICULARLY THE ONE LINE AND DEVICE SPECIFICATIONS) WITH THE ELECTRICAL CONTRACTOR, ANSWERS QUESTIONS, AND REVIEWS THE CONSTRUCTION TIMELINE ALONG WITH BEST PRACTICES FOR INSTALLATION. THIS SESSION IS DELIVERED USING A VIRTUAL SCREEN SHARING PLATFORM AND SHOULD NOT EXCEED 4-HOURS.
1	ONSITE PRE-WIRE VISIT (LSC-PREWIRE-ONST)	AN ONSITE VISIT WHERE THE LUTRON FIELD SERVICE ENGINEER REVIEWS THE LUTRON SUBMITTAL PACKAGE (PARTICULARLY THE ONE LINE AND DEVICE SPECIFICATIONS) WITH THE ELECTRICAL CONTRACTOR, ANSWERS QUESTIONS, AND REVIEWS THE CONSTRUCTION TIMELINE ALONG WITH BEST PRACTICES FOR INSTALLATION.
	POST-WIRE TERMINATION VISIT (LSC-POSTWIRE-VST)	AN ON-SITE WALK THROUGH BY A LUTRON FIELD SERVICE ENGINEER WITH THE ELECTRICAL CONTRACTOR TO CONFIRM THE PROCESSORS ARE ONLINE, THE DEVICES ARE INSTALLED AND WIRED PROPERLY, AND THE SYSTEM IS COMMUNICATING EFFICIENTLY PRIOR TO LUTRON RETURNING TO SITE FOR THE PHYSICAL STARTUP OF THE SYSTEM. THIS VISIT IS INTENDED AS A HIGH LEVEL VERIFICATION/CONFIRMATION THAT THE LUTRON EQUIPMENT IS WIRED AND POWERED; IT DOES NOT INCLUDE WIRING TROUBLESHOOTING, OR VALIDATION THAT THE ENTIRE SYSTEM WAS INSTALLED PER THE APPROVED SUBMITTAL. LUTRON WILL WORK TO CONFIRM OVERALL WIRING READINESS AND BASIC SYSTEM FUNCTIONALITY PRIOR TO START-UP AND WILL NOTE ANY DEFICIENCIES FOR THE ELECTRICAL CONTRACTOR. THE LUTRON SYSTEM MUST BE WIRED AND POWERED PRIOR TO THIS SITE VISIT.
	SENSOR LAYOUT & TUNING (LSC-SENS-LT)	LUTRON WILL TAKE RESPONSIBILITY FOR LUTRON-PROVIDED SENSOR PLACEMENT AND PERFORMANCE BY CREATING SENSOR LAYOUTS AND COORDINATING SENSOR PLACEMENT BEFORE AND AFTER INSTALLATION. ONCE THE BUILDING IS OCCUPIED, LUTRON WILL RETURN UP TO TWO TIMES TO PERFORM SENSOR FINE-TUNING.
	SYSTEM & NETWORK INTEGRATION CONSULTATION (LSC-INT-VISIT)	A CONSULTATIVE VISIT WITH THIRD PARTY INTEGRATORS TO CONFIRM THE SPECIFIED SEQUENCE OF OPERATION AND DISCUSS INTEGRATION PROCEDURES NEEDED IN ORDER TO INTEGRATE WITH THE LUTRON EQUIPMENT. THIS MAY INCLUDE ANY OF THE FOLLOWING THIRD PARTY SYSTEMS: BMS, BAS, IT, NON-LUTRON SHADES, BACNET, AV, OR ENERGY DASHBOARDS.
	STARTUP ELECTIVE SERVICES (THESE SERVICES ARE ADDITIONAL TO YOUR SPECIFIED STARTUP BASED ON YOUR REQUIREMENTS)	
	ONSITE SCENE & LEVEL TUNING (LSC-AF-VISIT)	AN ONSITE VISIT WITH THE SPECIFIER OR CUSTOMER REPRESENTATIVE TO REVIEW THE DESIGN INTENT, FINE-TUNE THE SCENE LEVEL PROGRAMMING, AND MAKE ADJUSTMENTS TO TIMECLOCKS.
	DYNAMIC WHITE PROGRAMMING PACKAGE (LSC-DWP-PKG)	A SPECIFIER DRIVEN PACKAGE WHICH INCLUDES ONE (1) POST WIRE TERMINATION VISIT (FOR WIRE VERIFICATION), TWO (2) VISITS TO PERFORM FINE TUNING OF FIXTURES AND PROGRAMMING ADJUSTMENTS PER THE DIRECTION OF A LIGHTING DESIGNER AND/OR A PRE-DETERMINED SEQUENCE OF OPERATIONS PROVIDED BY THE SPECIFIER. THE FIRST FINE-TUNING VISIT IS DURING NORMAL BUSINESS HOURS AND THE SECOND VISIT IS AN AFTER HOUR SITE VISIT. ALSO INCLUDED IN THIS PACKAGE IS A TWO-HOUR REMOTE SESSION FOR MINOR ADJUSTMENTS. REMOTE NETWORK ACCESS IS REQUIRED FOR THE REMOTE TWO HOUR SESSION AND THE SYSTEM MUST BE ABLE TO CONNECT TO THE INTERNET.
	ONSITE PERFORMANCE-VERIFICATION WALKTHROUGH (LSC-WALK)	AN ONSITE WALKTHROUGH WITH FACILITY REPRESENTATIVES OR PROJECT COMMISSIONING AGENTS TO DEMONSTRATE THAT THE SYSTEM FUNCTIONALITY MEETS THE DESIGN INTENT. THIS MAY INCLUDE ANY OF THE FOLLOWING ONSITE ACTIVITIES – CONSULTATION/TRAINING DEMOS, FUNCTIONAL TESTING ASSISTANCE, OR INVENTORY OF LUTRON EQUIPMENT.
	SYSTEM PERFORMANCE-VERIFICATION DOCUMENTATION (LSC-SPV-DOC)	COMPLETION OF DOCUMENTATION WHICH PROVIDES PERFORMANCE VERIFICATION CERTIFYING THE LUTRON EQUIPMENT HAS BEEN THOROUGHLY TESTED. IT SUPPORTS THE DOCUMENTATION REQUIREMENTS OF MANY BUILDING STANDARDS.
	SYSTEM PERFORMANCE-VERIFICATION DOCUMENTATION TITLE 24 (LSC-SPV-DOC-T24)	DOCUMENTS THE TITLE 24 ACCEPTANCE TESTS REQUIRED FOR THE LIGHTING CONTROL SYSTEM AND THE TEST'S RESULTS. DOCUMENTATION IS TO BE FILLED OUT AS A SEPARATE VISIT AFTER ONSITE STARTUP BY LUTRON'S CALIFORNIA CERTIFIED CALCTP TECHNICIAN. UPON COMPLETION, A LUTRON SERVICES REPRESENTATIVE WILL SUPPLY THE JOB-SPECIFIC TITLE 24 DOCUMENTATION THAT SHOWS THE RESULTS OF THE LIGHTING CONTROL SYSTEM TESTING.
	AFTER HOURS STARTUP (LSC-AH-SU)	STARTUP PROVIDED BETWEEN THE HOURS OF 5:00PM – 7:00AM, MONDAY - FRIDAY. THIS SCOPE OF WORK DOES NOT INCLUDE HOLIDAY OR WEEKEND WORK. ADDITIONAL FEES MAY APPLY FOR WORK TO BE COMPLETED ON WEEKENDS (FRIDAY 5:00PM – MONDAY 7:00AM).
	POST-STARTUP ELECTIVE SERVICES	
	CUSTOMER SYSTEM ORIENTATION VISIT (LSC-CSO-VST)	AN ON-SITE VISIT WHERE THE LUTRON FIELD SERVICE ENGINEER COMES OUT 30-90 DAYS POST-OCCUPANCY TO GO OVER THE LUTRON SYSTEM COMPONENTS WITH THE SYSTEM USER AND PERFORMS A THOROUGH TRAINING. THE FIELD SERVICE ENGINEER WILL ENSURE THE SYSTEM USER KNOWS HOW TO NAVIGATE WITHIN THEIR SYSTEM AND MAKE APPROPRIATE ADJUSTMENTS. THEY WILL ALSO PROVIDE A LEAVE BEHIND SYSTEM OPTIMIZATION RECOMMENDATION REPORT.
	TRAINING VISIT (LSC-TRAINING-SP)	CUSTOMER-SITE SOLUTION TRAINING – THIS TRAINING VISIT IS PROVIDED BY A LUTRON SERVICES REPRESENTATIVE TO TEACH SYSTEM USERS HOW TO OPERATE AND MAINTAIN THE LIGHTING CONTROL SYSTEM. QUANTITY DICTATES THE NUMBER OF VISITS PURCHASED.
	SYSTEM OPTIMIZATION (LSC-SYSOPT-SP)	AN ONSITE CONSULTATIVE VISIT TO IDENTIFY AND IMPLEMENT LIGHTING CONTROL ADJUSTMENTS TO SAVE ADDITIONAL ENERGY AND CREATE A MORE PRODUCTIVE WORK ENVIRONMENT.
	PREVENTATIVE MAINTENANCE VISIT (LSC-SCHD-MAINT)	VISIT TO PERFORM PREVENTATIVE MAINTENANCE, MINOR REPROGRAMMING, AND CONDUCT SYSTEM TRAINING. THE LUTRON SERVICE REPRESENTATIVE WILL REVIEW SERVICE OPTIONS WITH THE END-USER PRIOR TO BEGINNING ANY WORK. THE END-USER WILL RECEIVE DOCUMENTATION THAT DESCRIBES THE WORK PERFORMED AND ANY RECOMMENDATIONS FOR FUTURE SERVICE. QUANTITY DICTATES THE NUMBER OF DAYS PURCHASED.
	ADDITIONAL DAY OF SERVICE (LSC-DAY-ADDL-CS)	ONSITE DAY OF SERVICE BY A LUTRON SERVICE REPRESENTATIVE.
	REMOTE SUPPLEMENTAL TRAINING (LSC-TRAIN-RMTE)	A SUPPLEMENTAL REMOTE TRAINING FOR SITE PERSONNEL. THIS SERVICE IS AVAILABLE FOR LUTRON QUANTUM AND ATHENA SYSTEMS. THIS TRAINING IS NOT TO EXCEED 4 HOURS. REMOTE NETWORK ACCESS IS REQUIRED FOR THIS VISIT AND THE SYSTEM MUST BE ABLE TO CONNECT TO THE INTERNET.
	REMOTE PROGRAMMING ASSISTANCE (LSC-PRG-AST-RMTE)	ONE 4-HOUR REMOTE PROGRAMMING ASSISTANCE SESSION TO MAKE PROGRAMMING ADJUSTMENTS PER THE DIRECTION OF A FACILITY MANAGER OR SPECIFIER. THIS SERVICE IS AVAILABLE FOR LUTRON QUANTUM AND ATHENA SYSTEMS. REMOTE NETWORK ACCESS IS REQUIRED FOR THIS VISIT AND THE SYSTEM MUST BE ABLE TO CONNECT TO THE INTERNET.
	MAINTENANCE & SUPPORT SERVICES	
	SOFTWARE MAINTENANCE AGREEMENT (LSC-SMA-SP)	PROVIDES COMPATIBILITY TESTING RESULTS OF QUANTUM WITH OPERATING SYSTEM PATCHES AND WEB BROWSER UPDATES. INCLUDES AN ELECTIVE FREE SOFTWARE UPGRADE LICENSE.
1	COMMERCIAL SYSTEMS 2-YEAR LIMITED WARRANTY (LSC-B2)	A 2-YEAR SYSTEM WARRANTY PROVIDING 100% REPLACEMENT PARTS AND 100% LUTRON DIAGNOSTIC LABOR COVERAGE WITH A FIRST-AVAILABLE RESPONSE TIME.
	ENHANCED SILVER (LSC-E8S)	YEARS 1-2 - 100% REPLACEMENT PARTS AND 100% LUTRON DIAGNOSTIC LABOR COVERAGE WITH A FIRST-AVAILABLE RESPONSE TIME; YEARS 3-5 - 50% PARTS ONLY COVERAGE; YEARS 6-8 - 25% PARTS ONLY COVERAGE.
	ENHANCED GOLD (LSC-E8G)	YEARS 1-2 - 100% REPLACEMENT PARTS AND 100% LUTRON DIAGNOSTIC LABOR COVERAGE WITH A 72-HOUR RESPONSE TIME AND AN ANNUAL (1-DAY) SCHEDULED PREVENTIVE MAINTENANCE VISIT; YEARS 3-5 - 50% PARTS ONLY COVERAGE; YEARS 6-8 - 25% PARTS ONLY COVERAGE.
	ENHANCED PLATINUM (LSC-E8P)	YEARS 1-2 - 100% REPLACEMENT PARTS AND 100% LUTRON DIAGNOSTIC LABOR COVERAGE WITH A 24-HOUR RESPONSE TIME AND AN ANNUAL (1-DAY) SCHEDULED PREVENTIVE MAINTENANCE VISIT; YEARS 3-5 - 50% PARTS ONLY COVERAGE; YEARS 6-8 - 25% PARTS ONLY COVERAGE.
	SILVER TECHNOLOGY SUPPORT PLAN (LSC-SILV-IW)	AN ANNUAL SERVICE PLAN THAT COVERS 100% REPLACEMENT PARTS AND 100% LUTRON DIAGNOSTIC LABOR WITH A FIRST-AVAILABLE ONSITE OR REMOTE RESPONSE TIME.
	GOLD TECHNOLOGY SUPPORT PLAN (LSC-GOLD-IW)	AN ANNUAL SERVICE PLAN THAT COVERS 100% REPLACEMENT PARTS AND 100% LUTRON LABOR WITH A 72-HOUR ONSITE OR REMOTE RESPONSE TIME. ALSO INCLUDES AN ANNUAL (1-DAY) SCHEDULED PREVENTIVE MAINTENANCE VISIT EACH YEAR.
	PLATINUM TECHNOLOGY SUPPORT PLAN (LSC-PLAT-IW)	AN ANNUAL SERVICE PLAN THAT COVERS 100% REPLACEMENT PARTS AND 100% LUTRON DIAGNOSTIC LABOR WITH A 24-HOUR ONSITE OR REMOTE RESPONSE TIME. ALSO INCLUDES AN ANNUAL (1-DAY) SCHEDULED PREVENTIVE MAINTENANCE VISIT EACH YEAR.
	PREVENTIVE MAINTENANCE VISIT(S) (LSC-SCH-MAINT)	SCHEDULED MAINTENANCE VISIT TO PERFORM PREVENTIVE MAINTENANCE, MINOR PROGRAMMING, AND CONDUCT SYSTEM TRAININGS. QUANTITY IS IN ADDITION TO ANY YEARLY VISITS SPECIFIED WITH AN ENHANCED WARRANTY OR TECHNOLOGY SUPPORT PLAN.

PLEASE GO TO WWW.LUTRON.COM/SERVICES FOR FURTHER INFORMATION.

No.	Date	Revisions
0	02-18-25	RFP SET

Drawn by JL
Checked by SH
Project No. 40034G
Scale NONE
Date 02/18/2025

Mechanical, Electrical & Structural Engineer: GREENMAN PEDERSEN, INC, 2 EXECUTIVE BOULEVARD, SUITE 202, SUFFERN, NY 10901

Civil Engineer: ATZL, NASHER, & ZIGLER, 234 North Main Street, New City, NY 10956

RENOVATION OF ROCKLAND GREEN ADMINISTRATIVE HEADQUARTERS AND CONSTRUCTION OF AN IMMERSIVE THEATRE EXPERIENCE

172 MAIN STREET
NANUET, NY 10954

TOWN OF CLARKSTOWN
COUNTY OF ROCKLAND

MICHAEL SHILALE ARCHITECTS, L.L.P.
140 Park Avenue New City, NY 10956 Tel 845-708-9200
www.shilale.com

© COPYRIGHT, MICHAEL SHILALE ARCHITECTS, ALL RIGHTS RESERVED.

Drawing Title
ELECTRICAL LIGHTING CONTROLS

Drawing No.
E203

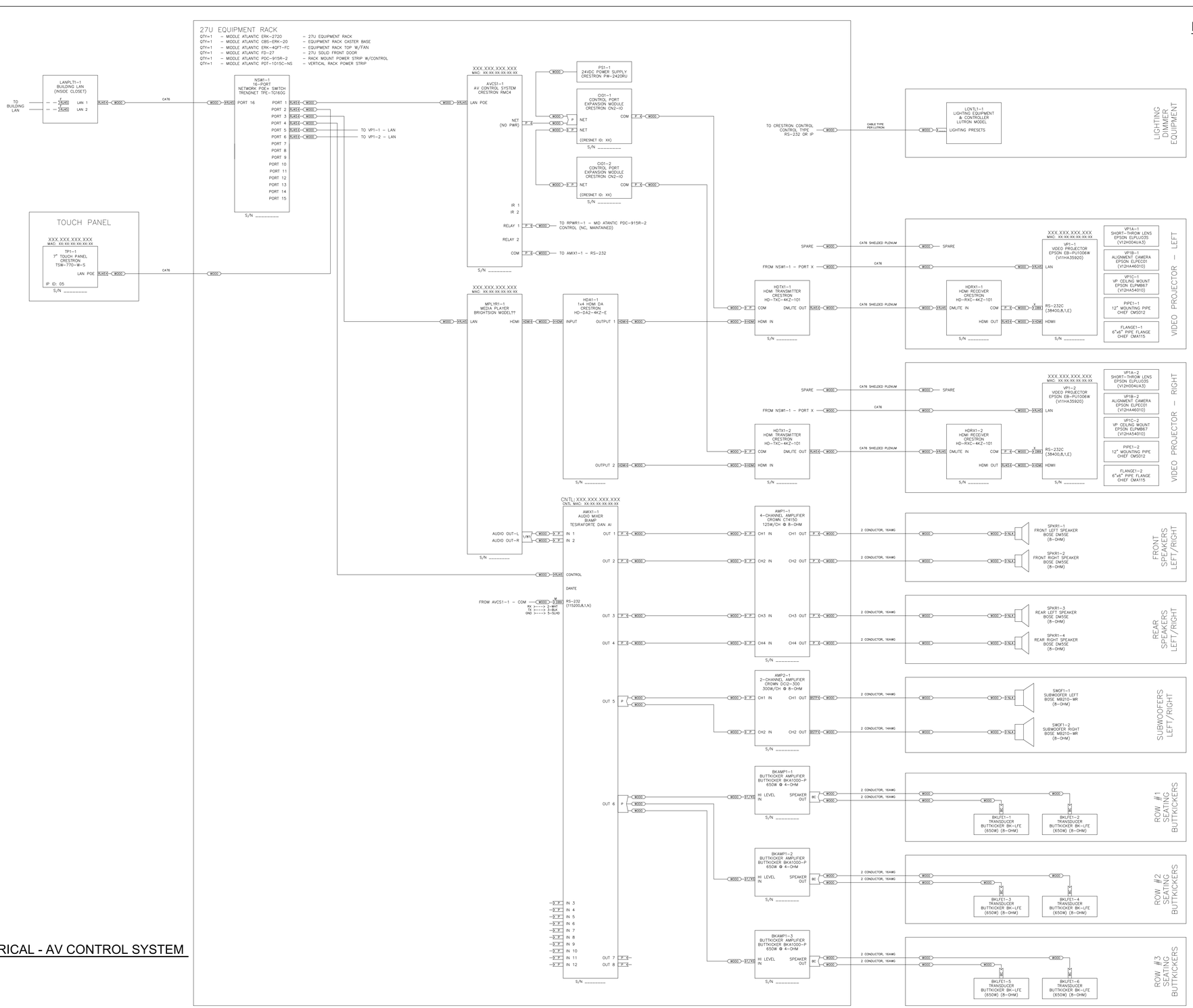

1
E204

ELECTRICAL - AV CONTROL SYSTEM

SCALE: NONE

PLAN NOTES:

1. DIAGRAM PROVIDED AS REFERENCE ONLY. FINAL AV RISER AND RACK EQUIPMENT PER WHIRLWIND.

No.	Date	Revisions
0	02-18-25	RFP SET

Drawn by	JL
Checked by	SH
Project No.	40034G
Scale	NONE
Date	02/18/2025

GREENMAN PEDERSEN, INC
2 EXECUTIVE BOULEVARD
SUITE 202
SUFFERN, NY 10901

Mechanical, Electrical & Structural Engineer:

ATZL, NASHER, & ZIGLER
234 North Main Street
New City, NY 10956

Civil Engineer:

RENOVATION OF ROCKLAND GREEN ADMINISTRATIVE HEADQUARTERS AND CONSTRUCTION OF AN IMMERSIVE THEATRE EXPERIENCE

TOWN OF CLARKSTOWN
COUNTY OF ROCKLAND

175 MAIN STREET
NANUET, NY 10954

MICHAEL SHILALE ARCHITECTS, L.L.P.
140 Park Avenue New City, NY 10956 Tel 845-708-9200
www.shilale.com

© COPYRIGHT, MICHAEL SHILALE ARCHITECTS, ALL RIGHTS RESERVED.

Drawing Title
ELECTRICAL AV CONTROLS

Drawing No.
E204

LEGEND:

DEMO	
EXISTING	
NEW	

PLAN NOTES:

1. PROVIDE 150KW NATURAL GAS GENERATOR IN LEVEL 2 SOUND ENCLOSURE; CUMMINS C150-N6.
2. PROVIDE 600AMP, 4-POLE SERVICE RATED AUTOMATIC-TRANSFER SWITCH, CUMMINS OTECC 600A IN NEMA TYPE 3R, OR APPROVED EQUIV.
3. REFER TO DISTRIBUTION BOARD DSB PANEL SCHEDULE FOR PANELBOARD FEEDER SIZES.

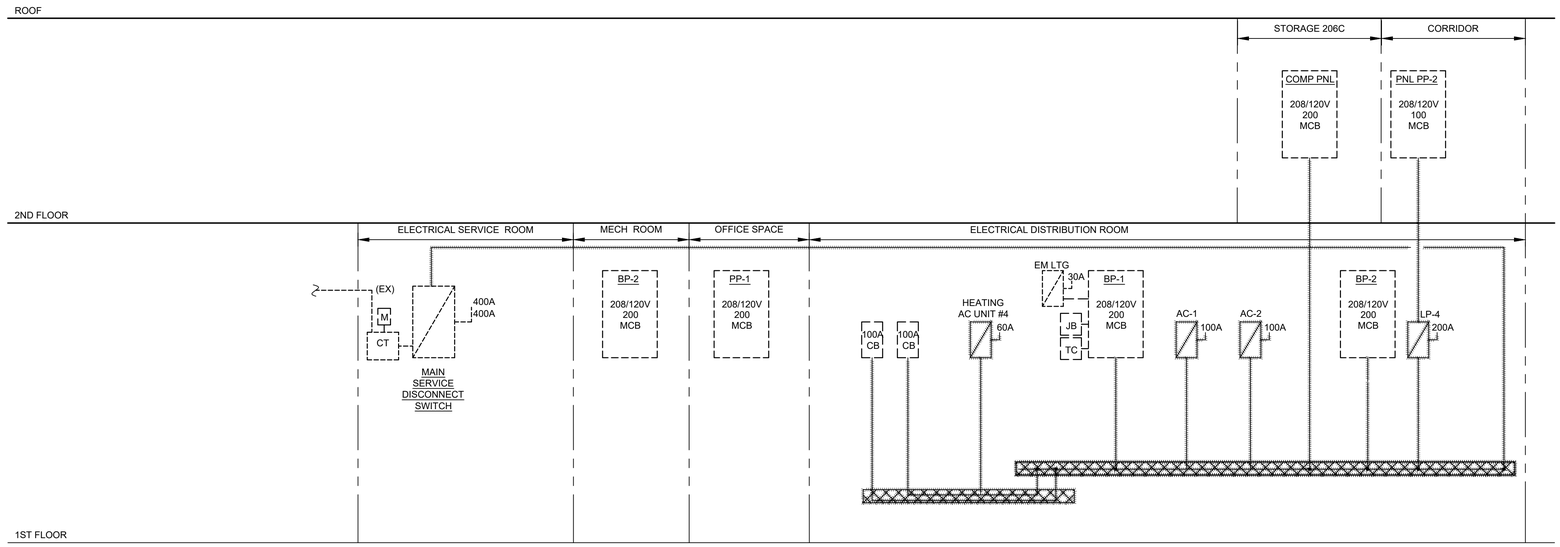

1 E301 ELECTRICAL RISER - EXISTING

SCALE: NONE

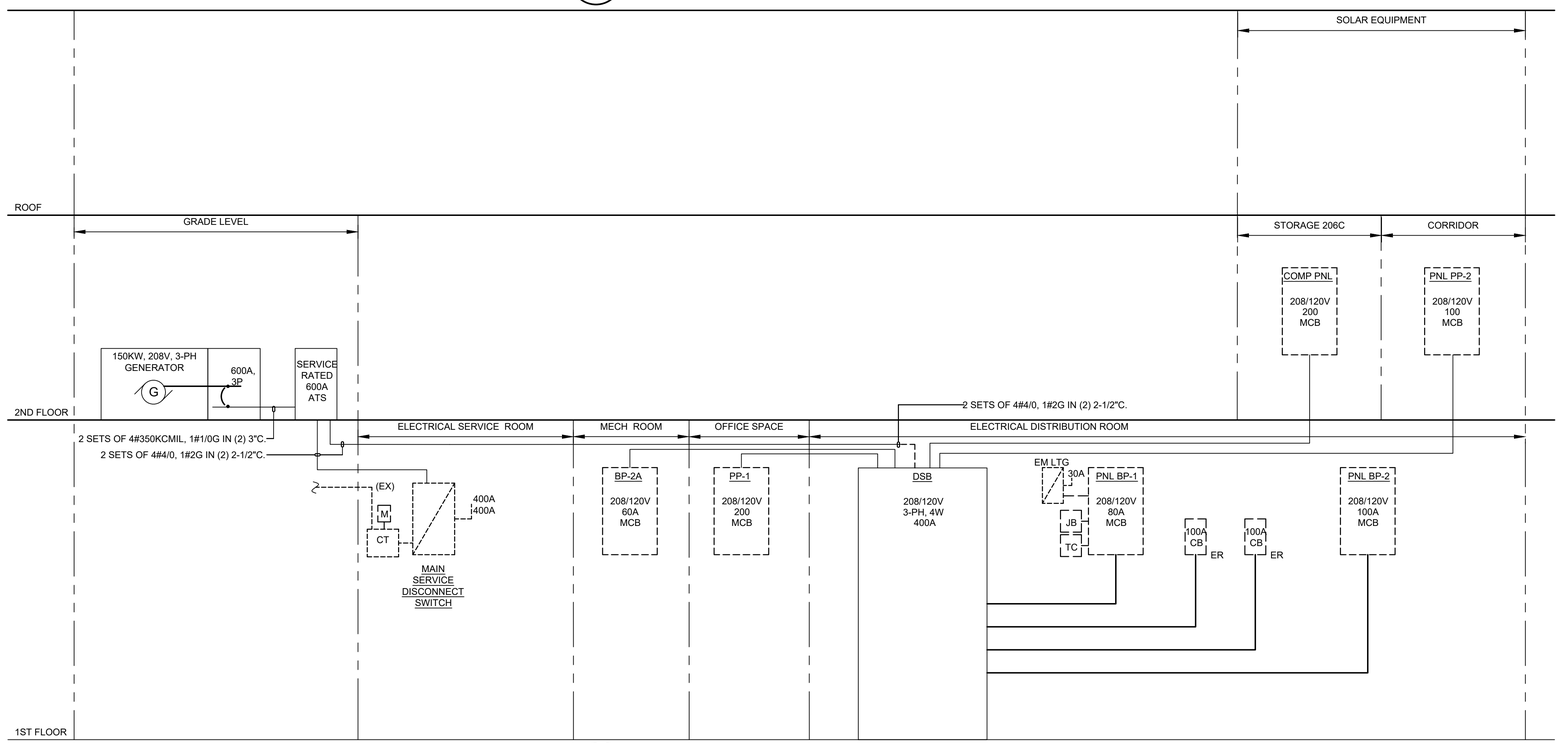

2 E301 ELECTRICAL RISER - INSTALL

SCALE: NONE

No.	Date	Revisions
0	02-18-25	RFP SET

Drawn by JL
Checked by SH
Project No. 40034G
Scale
Date 02/18/2025

GREENMAN PEDERSEN, INC
2 EXECUTIVE BOULEVARD
SUITE 202
SUFFERN, NY 10901

Mechanical, Electrical & Structural Engineer:

ATZL, NASHER, & ZIGLER
234 North Main Street
New City, NY 10956

Civil Engineer:

RENOVATION OF ROCKLAND GREEN ADMINISTRATIVE HEADQUARTERS AND CONSTRUCTION OF AN IMMERSIVE THEATRE EXPERIENCE

TOWN OF CLARKSTOWN
COUNTY OF ROCKLAND
172 MAIN STREET
NANUET, NY 10954

MICHAEL SHILALE ARCHITECTS, L.L.P.
140 Park Avenue New City, NY 10956 Tel 845-708-9200
www.shilale.com

© COPYRIGHT, MICHAEL SHILALE ARCHITECTS, ALL RIGHTS RESERVED.

Drawing Title
ELECTRICAL POWER RISER

Drawing No.
E301

SYSTEM RISER PLAN NOTES:

1. RISER DIAGRAMS PRESENTED ARE NOT POINT- TO - POINT WIRING DIAGRAMS. CONTRACTOR SHALL OBTAIN PROPER POINT- TO- POINT WIRING DIAGRAM FROM RESPECTIVE SYSTEM MANUFACTURER.

2. CIRCUITING/ LOOPS OF SYSTEM DEVICES ARE SHOWN FOR REFERENCE ONLY. FIELD CONDITIONS PREVAIL. EXACT CIRCUITING/LOOPS OF DEVICES MIGHT DIFFER FROM REFERENCES INDICATED. FIELD VERIFY AND COORDINATE WITH MANUFACTURER FOR EXACT CIRCUITING/LOOPS AND ADDITIONAL INFORMATION.

LEGEND:

DEMO	
EXISTING	
NEW	

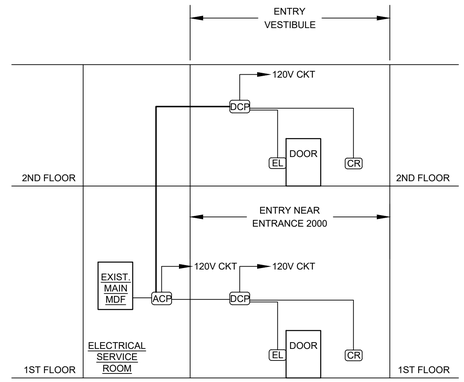

1 E302 SECURITY ACCESS CONTROL DETAIL

SCALE: NONE

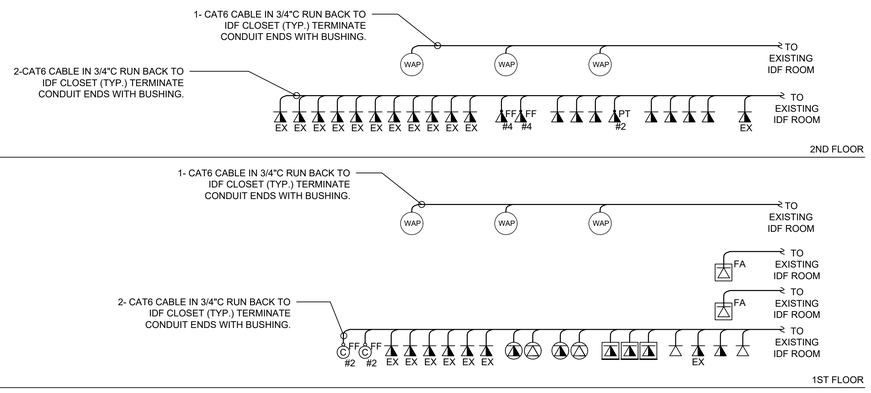

2 E302 PARTIAL DATA RISER

SECURITY SYSTEM NOTES:

1. RISER DIAGRAM IS FOR SCHEMATIC DESIGN PURPOSE ONLY. FINAL QUANTITIES ARE INDICATED ON FLOOR PLANS. COORDINATE WITH EXISTING SYSTEM VENDOR FOR ALL ANCILLARY COMPONENTS REQUIRED FOR THE INSTALLATION OF ADDITIONAL DEVICES INTO THE EXISTING COMMUNICATIONS DATA SYSTEM.
2. CIRCUITING OF SYSTEM DEVICES ARE SHOWN FOR REFERENCE ONLY; FIELD CONDITIONS PREVAIL. FIELD VERIFY AND COORDINATE WITH MANUFACTURER FOR EXACT CIRCUITING AND ADDITIONAL INFORMATION.
3. VERIFY LOCATION OF EXISTING SYSTEM RACKS AND MAIN CONTROL PANELS TO SERVE NEW EQUIPMENT AND THEIR ASSOCIATED COMPONENTS.
4. ALL DATA CONDUIT ENDS SHALL BE TERMINATED WITH BUSHINGS.
5. UTILIZE COMPRESSION TYPE FITTINGS WITH EMT CONDUIT INSTALLATIONS; SET SCREW TYPE IS NOT PERMITTED.
6. ALL NEW DEVICE WIRING SHALL RUN IN 3/4" EMT TO BACKBOX; U.O.N.
7. COORDINATE WITH EXISTING SECURITY SYSTEM VENDOR FOR TERMINATION OF CABLES TO NEW MAIN ACCESS CONTROL PANEL. SECURITY VENDOR TO PROGRAM SYSTEM TO ACCOMMODATE CHANGES. VERIFY LOCATION OF MAIN ACCESS CONTROL PANEL IN FIELD WITH BUILDING REPRESENTATIVE.
8. CAT6 CABLES AND FIBER OPTIC CABLES SHALL BE TESTED AND TERMINATED WHERE INSTALLED.
9. PROVIDE 6"X6"X4" DEEP JUNCTION BOX SURFACE MOUNTED ABOVE DOOR ABOVE ACCESSIBLE CEILING ON SECURE SIDE OF DOOR.
10. STUB CONDUIT INTO HEAD OF DOOR FRAME 6" FROM STRIKE SIDE OF FRAME FOR DOOR POSITION SWITCH; WHERE APPLICABLE.
11. PROVIDE 15/16" DIA. X 1-5/8" DEEP HOLE IN TOP OF DOOR FOR CONCEALED DOOR POSITION SWITCH MAGNET.
12. WHERE ELECTRIC STRIKE IS INSTALLED, STUB CONDUIT DOWN FRAME TO 2" ABOVE CUT OUT FOR ELECTRIC STRIKE INSTALLATION.
13. PROVIDE 4"X4" X2-1/8" DEEP BOX WITH SINGLE GANG REDUCER PLATE FLUSH MOUNTED 3'-2" A.F.F FOR CARD READER; FINAL HEIGHT PER ARCHITECTURAL DRAWINGS.
14. PROVIDE CONDUITS AND ROUGH-INS FOR SECURITY ACCESS CONTROL SYSTEM. PROVIDE CABLING AND TERMINATIONS AS REQUIRED.

TELE/DATA SYSTEM PLAN NOTES:

1. ALL NEW DEVICE WIRING (CAT6 CABLE) SHALL RUN IN 3/4" EMT TO A SURFACE-MOUNTED METALLIC RACEWAY WHEN MOUNTED UNDER FURNITURE; DEVICE WIRING SHALL RUN VIA CABLE TRAY WHEN RAN ABOVE CEILING.
2. RISER DIAGRAM IS FOR SCHEMATIC DESIGN PURPOSE ONLY. FINAL QUANTITIES ARE INDICATED ON FLOOR PLANS. COORDINATE WITH EXISTING SYSTEM VENDOR FOR ALL ANCILLARY COMPONENTS REQUIRED FOR THE INSTALLATION OF ADDITIONAL DEVICES INTO THE EXISTING COMMUNICATIONS DATA SYSTEM.
3. VERIFY LOCATION IN FIELD OF PANELS, HUBS, ETC. SERVING EXISTING REMOVED DEVICES, UTILIZE NEAREST AVAILABLE PATCH PANELS TO SERVE DEVICES.
4. VERIFY LOCATION OF IDF RACK IN FIELD SERVING RELOCATED EQUIPMENT.
5. SUPERSCRIPT "FF" DENOTES FURNITURE FEED. SUBSCRIPT "#X" DENOTES QTY OF DATA DROPS TO FURNITURE FEED.
6. SUPERSCRIPT "PT" DENOTES FLOOR MOUNTED POKE-THRU DEVICE.
7. SUPERSCRIPT "FA" DENOTES DEDICATED FIRE ALARM PHONE LINES CONNECTED TO THE FIRE ALARM DACT.

No.	Date	Revisions
0	02-18-25	RFP SET

Drawn by	JL
Checked by	SH
Project No.	40034G
Scale	NONE
Date	02/18/2025

GREENMAN PEDERSEN, INC
2 EXECUTIVE BOULEVARD
SUITE 202
SUFFERN, NY 10901

Mechanical, Electrical & Structural Engineer:

ATZL, NASHER, & ZIGLER
234 North Main Street
New City, NY 10956

Civil Engineer:

RENOVATION OF ROCKLAND GREEN ADMINISTRATIVE HEADQUARTERS AND CONSTRUCTION OF AN IMMERSIVE THEATRE EXPERIENCE

175 MAIN STREET
NANUET, NY 10954

TOWN OF CLARKSTOWN
COUNTY OF ROCKLAND

MICHAEL SHILALE ARCHITECTS, L.L.P.
140 Park Avenue New City, NY 10956 Tel 845-708-9200
www.shilale.com

© COPYRIGHT, MICHAEL SHILALE ARCHITECTS, ALL RIGHTS RESERVED.

Drawing Title
ELECTRICAL SYSTEMS PARTIAL RISERS

Drawing No.
E302

PANEL SCHEDULE

PANEL NAME:	DSB	**LOCATION:**	ELECTRICAL DISTRIBUTION ROOM 2017	**MOUNTING:**	FREE STANDING
VOLTAGE/PHASE:	208/120V, 3-PH, 4W	**PANEL (AMP)**	400A	**FREQUENCY:**	60 Hz
PANEL SHORT CIRCUIT RATING(KA):	200 KAIC	**FEEDER SIZE**	2 SETS 4#4/0, 1#2 GND IN (2) 2"C.	**FEEDING SOURCE:**	400A MAIN DISC. SW
MAIN BREAKER TYPE	MLO	**MAIN BREAKER RATING (A):**	-	**BRANCH C.B TYPE**	BOLT-ON

Load Designation	Wiring	C/B	CT NO	Phase Load in VA AØ	BØ	CØ	CT NO	C/B	Wiring	Load Designation
ACCU-1	3#2, 1#6G IN 1-1/2"C.	90	1	6725			2	70	3#2, 1#6G IN 1-1/2"C.	ACCU-2
				5284						
			3		6725		4			
					5284					
			5			6725	6			
						5284				
PP-1A	4#2, 1#6G IN 1-1/2"C.	100	7	2550			8	80	3#2, 1#6G IN 1-1/2"C.	DOAS-1
				6365						
			9		2935.5		10			
					6365					
			11			3154	12			
						6365				
EXISTING CIRCUIT BREAKER	4#2, 1#6G IN 1-1/2"C.	100	13	3000			14	100	4#2, 1#6G IN 1-1/2"C.	EXISTING CIRCUIT BREAKER
				4320						
			15		3000		16			
					4320					
			17			3000	18			
						4320				
EXISTING PANEL BP-2A (MECH ROOM 2015)	4#4, 1#8G IN 1-1/4"C.	60	19	2400			20	100	4#2, 1#6G IN 1-1/2"C.	EXISTING PANEL PP-2 (2ND FLR CORRIDOR)
				4256						
			21		1520		22			
					4366.4					
			23			2100	24			
						4203.8				
EXISTING PANEL BP-1	4#2, 1#6G IN 1-1/2"C.	100	25	6442			26	100	4#2, 1#6G IN 1-1/2"C.	EXISTING PANEL BP-2
				8784						
			27		5602		28			
					9556					
			29			7504	30			
						9624				
PANEL PP-1 (RELOCATED RECESSED)	4#4/0, 1#4G IN 2-1/2"C.	200	31	6442			32	200	4#4/0, 1#4G IN 2-1/2"C.	EXISTING COMPUTER PANEL (2ND FLR CLOSET)
				8784						
			33		5602		34			
					9556					
			35			7504	36			
						9624				
SPARE		200	37				38	200		SPARE
			39				40			
			41				42			

CONNECTED LOAD PER PHASE IN VA	65352	64831	69407	**PANEL TYPE: NEMA 1** **MOUNTING: FREE STANDING**
TOTAL CONNECTED LOAD IN KVA	199.590437			**COPPER BUS, EQUIP. GROUND BAR, & CLASS B SURGE PROTECTOR**
TOTAL DEMAND LOAD IN AMPS	360.12			

PANEL SCHEDULE

PANEL NAME:	BP-1 (EXISTING)	**LOCATION:**	ELECTRICAL DISTRIBUTION ROOM 2017	**MOUNTING:**	SURFACE
VOLTAGE/PHASE:	208/120V	**PANEL (AMP)**	200A	**FREQUENCY:**	60 Hz
PANEL SHORT CIRCUIT RATING(KA):	EXISTING	**FEEDER SIZE**	**4#2,1#6 GND IN 1-1/2"C.**	**FEEDING SOURCE:**	DSB
MAIN BREAKER TYPE	MCB	**MAIN BREAKER RATING (A):**	**100A****	**BRANCH C.B TYPE**	BOLT-ON

Load Designation	Wiring	C/B (A)	CT NO	Phase Load in VA AØ	BØ	CØ	CT NO	C/B (A)	Wiring	Load Designation
SUB-PANEL	EXISTING TO REMAIN	100	1	500			2			SPACE
			3		500		4			SPACE
EXISTING LOAD	EXISTING TO REMAIN	20	5			270	6	40	EXISTING TO REMAIN	EXISTING LOAD
						1560				
EXISTING LOAD	EXISTING TO REMAIN	20	7	540			8			
				1650						
EXISTING LOAD	EXISTING TO REMAIN	20	9		300		10	20	2#12,1#12G-3/4"C	CARD READER SYSTEM
					300					
EXISTING LOAD	EXISTING TO REMAIN	20	11			360	12	20	EXISTING TO REMAIN	EXISTING LOAD
						540				
EXISTING LOAD	EXISTING TO REMAIN	20	13	270			14	20	EXISTING TO REMAIN	EXIT SIGNS
				30						
EXISTING LOAD	EXISTING TO REMAIN	20	15		360		16	20	EXISTING TO REMAIN	EXISTING LOAD
					360					
EXISTING LOAD	EXISTING TO REMAIN	20	17			360	18	20	EXISTING TO REMAIN	EXISTING LOAD
						270				
EXISTING LOAD	EXISTING TO REMAIN	20	19	360			20	20	EXISTING TO REMAIN	EXISTING LOAD
				270						
EXISTING LOAD	EXISTING TO REMAIN	20	21		360		22	20	EXISTING TO REMAIN	EXISTING LOAD
					270					
EXISTING LOAD	EXISTING TO REMAIN	20	23			360	24	20	EXISTING TO REMAIN	COMPUTER ROOM AC UNIT
						1352				
EXISTING LOAD	EXISTING TO REMAIN	20	25	360			26			
				1352						
SUMP PUMP	EXISTING TO REMAIN	20	27		300		28	20	EXISTING TO REMAIN	COMPUTER ROOM AC UNIT
					1352					
EXISTING LOAD	EXISTING TO REMAIN	20	29			360	30			
						1352				
EXISTING LOAD	EXISTING TO REMAIN	20	31	360			32	20	EXISTING TO REMAIN	EXISTING LOAD
				270						
FIRE ALARM	EXISTING TO REMAIN	20*	33		300		34	20	EXISTING TO REMAIN	EXISTING LOAD
					720					
EXISTING LOAD	EXISTING TO REMAIN	20	35			360	36	20	EXISTING TO REMAIN	EXISTING LOAD
						360				
TIME CLK - OUTSIDE LTG	EXISTING TO REMAIN	20	37	300			38	20	EXISTING TO REMAIN	EXISTING LOAD
				180						
TIME CLK - NIGHT LTG	EXISTING TO REMAIN	20	39		300		40	20	EXISTING TO REMAIN	REC. TEL - UTILITY ROOM
					180					

CONNECTED LOAD PER PHASE IN VA	6442	5602	7504	**PANEL TYPE: NEMA 1** **MOUNTING: SURFACE**
TOTAL CONNECTED LOAD IN KVA	19.548			**"*" DENOTES TO PROVIDE WITH LOCKABLE CIRCUIT BREAKER.**
TOTAL DEMAND LOAD IN AMPS	54.26			**"**" DENOTES TO PROVIDE WITH NEW MAIN CB.**

PANEL SCHEDULE

PANEL NAME:	BP-2A (EXISTING)	**LOCATION:**	MECH ROOM 2015	**MOUNTING:**	SURFACE
VOLTAGE/PHASE:	208/120V	**PANEL (AMP)**	200A	**FREQUENCY:**	60 Hz
PANEL SHORT CIRCUIT RATING(KA):	EXISTING	**FEEDER SIZE**	EXISTING	**FEEDING SOURCE:**	DSB
MAIN BREAKER TYPE	MCB	**MAIN BREAKER RATING (A):**	**60A***	**BRANCH C.B TYPE**	BOLT-ON

Load Designation	Wiring	C/B (A)	CT NO	Phase Load in VA AØ	BØ	CØ	CT NO	C/B (A)	Wiring	Load Designation
EXISTING LOAD	EXISTING TO REMAIN	20	1	200			2	15	EXISTING TO REMAIN	EXISTING LOAD
				200						
REC - GEN. OFFICE	EXISTING TO REMAIN	15	3		200		4	15	EXISTING TO REMAIN	REC - GENERAL USE
					200					
REC - GEN. OFFICE	EXISTING TO REMAIN	20	5			200	6	15	EXISTING TO REMAIN	EXISTING LOAD
						200				
LTG - TIME CLOCK	EXISTING TO REMAIN	15	7	200			8	15	EXISTING TO REMAIN	EXISTING LOAD
				200						
COMPUTER TERMINAL	EXISTING TO REMAIN	15	9		200		10	20	EXISTING TO REMAIN	EXISTING LOAD
					720					
EXISTING LOAD	EXISTING TO REMAIN	20	11			300	12	20	EXISTING TO REMAIN	EXISTING LOAD
						1000				
GENERAL USE	EXISTING TO REMAIN	15	13	200			14			
				1000						
EXISTING LOAD	EXISTING TO REMAIN	20	15				16	30	EXISTING TO REMAIN	EXISTING LOAD
					200					
IBM	EXISTING TO REMAIN	20	17			200	18	20	EXISTING TO REMAIN	EXISTING LOAD
						200				
IBM	EXISTING TO REMAIN	15	19	200			20	15	EXISTING TO REMAIN	EXISTING LOAD
				200						

CONNECTED LOAD PER PHASE IN VA	2400	1520	2100	**PANEL TYPE: NEMA 1** **MOUNTING: SURFACE**
TOTAL CONNECTED LOAD IN KVA	6.02			**COPPER BUS, EQUIP. GROUND BAR**
TOTAL DEMAND LOAD IN AMPS	15.04			**"*" DENOTES REPLACE MAIN CB WITH NEW 60CB.**

PANEL SCHEDULE

PANEL NAME:	BP-2 (EXISTING)	**LOCATION:**	ELECTRICAL DISTRIBUTION ROOM 2017	**MOUNTING:**	SURFACE
VOLTAGE/PHASE:	208/120V	**PANEL (AMP)**	200A	**FREQUENCY:**	60 Hz
PANEL SHORT CIRCUIT RATING(KA):	EXISTING	**FEEDER SIZE**	**4#2,1#6 GND IN 1-1/2"C.**	**FEEDING SOURCE:**	DSB
MAIN BREAKER TYPE	MCB	**MAIN BREAKER RATING (A):**	**100A****	**BRANCH C.B TYPE**	BOLT-ON

Load Designation	Wiring	C/B (A)	CT NO	Phase Load in VA AØ	BØ	CØ	CT NO	C/B (A)	Wiring	Load Designation
SPARE		100	1				2			SPACE
			3				4			SPACE
SPARE		50	5			676	6	20	EXISTING TO REMAIN	EXISTING LOAD
			7				8			
				676						
SPARE		40	9		1352		10	20	EXISTING TO REMAIN	EXISTING LOAD
			11			1352	12	20	EXISTING TO REMAIN	EXISTING LOAD
						676				
UPS 1 & 2		30	13				14			
				676						
			15				16	20	EXISTING TO REMAIN	EXISTING LOAD
					676					
EXISTING LOAD	EXISTING TO REMAIN	15	17			540	18			
						676				
EXISTING LOAD	EXISTING TO REMAIN	20	19	676			20	40	EXISTING TO REMAIN	EXISTING LOAD
				1352						
			21		676		22			
					1352					
EXISTING LOAD	EXISTING TO REMAIN	50	23			1690	24	30	EXISTING TO REMAIN	EXISTING LOAD
						1014				
			25	1690			26			
				1014						
SPACE			27				28	40*	2#8, 1#10 IN 3/4"C.	HWH-1
					3000					
SPACE			29				30			
						3000				
CUH-1	2#10,1#10G-3/4"C	35*	31	2500			32	20*	2#12, 1#12G-3/4"C.	ASCO
				200						
			33		2500		34			SPACE
SPARE		80	35				36			SPACE
			37				38			SPACE
			39				40			SPACE

CONNECTED LOAD PER PHASE IN VA	8784	9556	9624	**PANEL TYPE: NEMA 1** **MOUNTING: SURFACE**
TOTAL CONNECTED LOAD IN KVA	27.964			**" * " DENOTES TO PROVIDE NEW CB.**
TOTAL DEMAND LOAD IN AMPS	58.22			**" ** " DENOTES TO PROVIDE WITH NEW MAIN CB.**

PLAN NOTES:

1. FOR GENERAL NOTES, ABBREVIATIONS AND ELECTRICAL SYMBOLS; REFER TO DWG. E001.
2. UPDATE ALL EXISTING PANEL DIRECTORIES AFFECTED BY NEW WORK.
3. GFCI CIRCUIT BREAKER(S) TO BE RATED 30mA.

No.	Date	Revisions
0	02-18-25	RFP SET

Drawn by JL
Checked by SH
Project No. 40034G
Scale
Date 02/18/2025

GREENMAN PEDERSEN, INC
2 EXECUTIVE BOULEVARD
SUITE 202
SUFFERN, NY 10901
Mechanical, Electrical & Structural Engineer:

ATZL, NASHER, & ZIGLER
234 North Main Street
New City, NY 10956
Civil Engineer:

RENOVATION OF ROCKLAND GREEN ADMINISTRATIVE HEADQUARTERS AND CONSTRUCTION OF AN IMMERSIVE THEATRE EXPERIENCE

172 MAIN STREET
HAVERSTRAW, NY 10927

TOWN OF CLARKSTOWN
COUNTY OF ROCKLAND

MICHAEL SHILALE ARCHITECTS, L.L.P.
140 Park Avenue New City, NY 10956 Tel 845-708-9200
www.shilale.com

© COPYRIGHT, MICHAEL SHILALE ARCHITECTS, ALL RIGHTS RESERVED.

Drawing Title
ELECTRICAL PANEL SCHEDULES SHEET NO.1

Drawing No.
E401

PANEL SCHEDULE

PANEL NAME:	PP-1 (EXISTING)	**LOCATION:**	STAFF 2007	**MOUNTING:**	RECESSED
VOLTAGE/PHASE:	208/120V	**PANEL (AMP)**	200A	**FREQUENCY:**	60 Hz
PANEL SHORT CIRCUIT RATING(KA):	EXISTING	**FEEDER SIZE**	EXISTING	**FEEDING SOURCE:**	DSB
MAIN BREAKER TYPE	MCB	**MAIN BREAKER RATING (A):**	200A	**BRANCH C.B TYPE**	BOLT-ON

Load Designation	Wiring	C/B (A)	CT NO	Phase Load in VA AØ	BØ	CØ	CT NO	C/B (A)	Wiring	Load Designation
LTG – OPEN OFFICE 2003	2#12, 1#12G–3/4"C.	20	1	322.3			2	20	2#12, 1#12G–3/4"C.	REC– OPEN OFFICE 2003
				455						
LTG – OFFICE 2001	2#12, 1#12G–3/4"C.	20	3		175.8		4	20	2#12, 1#12G–3/4"C.	REC– OPEN OFFICE 2003
					455					
LTG – STORAGE	2#12, 1#12G–3/4"C.	20	5			58.6	6	20	2#12, 1#12G–3/4"C.	REC– OPEN OFFICE 2003
						455				
LTG – TOILET 2013/2014	2#12, 1#12G–3/4"C.	20	7	29.3			8	20	2#12, 1#12G–3/4"C.	REC– OPEN OFFICE 2003
				455						
LTG – BREAK ROOM/CORR	2#12, 1#12G–3/4"C.	20	9		309.1		10	20		SPARE
LTG – TOILET 2005, 2009	2#12, 1#12G–3/4"C.	20	11			500	12	20		SPARE
SPARE		20	13				14	20		SPARE
SPARE		20	15				16	20		SPARE
SPARE		20	17			445	18	20	EXISTING TO REMAIN	REC – OPEN OFFICE 2003
SPARE		20	19	360			20	20	EXISTING TO REMAIN	REC – CORRIDOR
REC – OPEN OFFICE 2003	EXISTING TO REMAIN	20	21		445		22	20	EXISTING TO REMAIN	REC – CORRIDOR
					360					
REC – OPEN OFFICE 2003	EXISTING TO REMAIN	20	23			445	24	20	EXISTING TO REMAIN	REC – CORRIDOR
						360				
REC – BATHROOM	EXISTING TO REMAIN	20	25	180			26	20	EXISTING TO REMAIN	REC – LIEBERT 2001
				445						
REC – BATHROOM	EXISTING TO REMAIN	20	27		180		28	20		SPARE
REC – BATHROOM	EXISTING TO REMAIN	20	29			180	30	20	2#12, 1#12G–3/4"C.	REC – VENDING MACHINE
						1000				
LTG – TOILET 2005	2#12, 1#12G–3/4"C.	20	31	77			32	20	2#12, 1#12G–3/4"C.	REC – VENDING MACHINE
				1000						
BOILER CIRC PUMPS	EXISTING TO REMAIN	20	33		200		34	20	2#12, 1#12G–3/4"C.	REC – MICROWAVE
					1200					
BOILER CIRC PUMPS	EXISTING TO REMAIN	20	35			200	36	20	2#12, 1#12G–3/4"C.	REC – REFRIGERATOR
						500				
BOILER CIRC PUMPS	EXISTING TO REMAIN	20	37	200			38	20	2#12, 1#12G–3/4"C.	REC – KITCHEN 129 GFI
				1680						
SPARE		20	39		300		40	20	2#12, 1#12G–3/4"C.	REC – KITCHEN 129 GFI
SPARE		20	41			300	42	20	2#12, 1#12G–3/4"C.	REC – KITCHEN 129 GFI
CONNECTED LOAD PER PHASE IN VA				5204	3625	4144				
TOTAL CONNECTED LOAD IN KVA				12.9721						
TOTAL DEMAND LOAD IN AMPS				32.41						

PANEL TYPE: NEMA 1 **MOUNTING: RECESSED**
COPPER BUS, EQUIP. GROUND BAR

PANEL SCHEDULE

PANEL NAME:	PP-2	**LOCATION:**	CORRIDOR 1017	**MOUNTING:**	RECESSED
VOLTAGE/PHASE:	208/120V	**PANEL (AMP)**	100A	**FREQUENCY:**	60 Hz
PANEL SHORT CIRCUIT RATING(KA):	EXISTING	**FEEDER SIZE**	**4#2,1#6 GND IN 1-1/2"C.**	**FEEDING SOURCE:**	DSB
MAIN BREAKER TYPE	MCB	**MAIN BREAKER RATING (A):**	100A	**BRANCH C.B TYPE**	BOLT-ON

Load Designation	Wiring	C/B (A)	CT NO	Phase Load in VA AØ	BØ	CØ	CT NO	C/B (A)	Wiring	Load Designation
LTG – EXEC. OFFICE	2#12, 1#12G–3/4"C.	20	1	236.8			2	20	2#12, 1#12G–3/4"C.	LTG – BATH 206A, 206B
				59.2						
LTG – EXEC/MGR OFFICE	2#12, 1#12G–3/4"C.	20	3		236.8		4	20	2#12, 1#12G–3/4"C.	LTG – OPEN OFFICE 201
					236.8					
LTG – OFFICE 208,209,210	2#12, 1#12G–3/4"C.	20	5			355.2	6	20	2#12, 1#12G–3/4"C.	LTG – OPEN OFFICE 201
						177.6				
SPARE		20	7				8	20	EXISTING TO REMAIN	REC – RECEPTION 200
				360						
LTG – CORRIDOR/TOILETS	2#12, 1#12G–3/4"C.	20	9		237.6		10	20	2#12, 1#12G–3/4"C.	LTG – CONF. 214
					355.2					
REC – OPEN OFFICE 201	EXISTING TO REMAIN	20	11			360	12	20	2#12, 1#12G–3/4"C.	LTG – RECEPTION
						215.8				
REC – OFFICE 202	2#12, 1#12G–3/4"C.	20	13	180			14	20	EXISTING TO REMAIN	REC – JOHNSON OFFICE 207
				360						
REC – OFFICE 203	2#12, 1#12G–3/4"C.	20	15		180		16	20	EXISTING TO REMAIN	REC – CARPEZZI OFFICE 205
					360					
REC – OFFICE 201	2#12, 1#12G–3/4"C.	20	17			360	18	20	EXISTING TO REMAIN	REC – LIEBERT OFFICE 204
						360				
SPARE		20	19				20	20	2#12, 1#12G–3/4"C.	REC – OFFICE 202
				360						
SPARE		20	21				22	20	EXISTING TO REMAIN	REC – CORRIDOR
					360					
REC – RMS 208,209,210	EXISTING TO REMAIN	20	23			540	24	20	EXISTING TO REMAIN	REC – KITCHEN 215
						300				
REC – CONF RM 214	2#12, 1#12G–3/4"C.	20	25	360			26	20	EXISTING TO REMAIN	REC – KITCHEN 215
				1680						
REC – CONF RM 214	2#12, 1#12G–3/4"C.	20	27		360		28	20	EXISTING TO REMAIN	REC – MICROWAVE
					1200					
LTG – OFFICE 202,203,204	2#12, 1#12G–3/4"C.	20	29			355.2	30	20	EXISTING TO REMAIN	REC – REFRIGERATOR
						1000				
AC UNIT OFFICE	EXISTING TO REMAIN	20	31				32	20	EXISTING TO REMAIN	REC – BATHROOM
				180						
			33				34	20	EXISTING TO REMAIN	REC – BATHROOM
					180					
V V T 2ND FLOOR	EXISTING TO REMAIN	20	35				36	20	EXISTING TO REMAIN	REC – BATHROOM
						180				
HVAC CONTROL PANEL	2#12, 1#12G–3/4"C.	20	37	300			38	20	EXISTING TO REMAIN	REC – BATHROOM
				180						
AWNING EXTERIOR SIGNAGE	2#12, 1#12G–3/4"C.	20	39		300		40	20	2#12, 1#12G–3/4"C.	REC – ROOF
					360					
SPARE		20	41				42	20		SPARE
CONNECTED LOAD PER PHASE IN VA				4256	4366	4204				
TOTAL CONNECTED LOAD IN KVA				12.8262						
TOTAL DEMAND LOAD IN AMPS				32.04						

PANEL TYPE: NEMA 1 **MOUNTING: RECESSED**
COPPER BUS, EQUIP. GROUND BAR

PLAN NOTES:

1. FOR GENERAL NOTES, ABBREVIATIONS AND ELECTRICAL SYMBOLS; REFER TO DWG. E001.
2. UPDATE ALL EXISTING PANEL DIRECTORIES AFFECTED BY NEW WORK.
3. GFCI CIRCUIT BREAKER(S) TO BE RATED 30mA.

PANEL SCHEDULE

PANEL NAME:	**PP-1A (THEATER-EXHIBIT PNL)**	**LOCATION:**	**THEATER**	**MOUNTING:**	**RECESSED**
VOLTAGE/PHASE:	**208/120V**	**PANEL (AMP)**	**100A**	**FREQUENCY:**	**60 Hz**
PANEL SHORT CIRCUIT RATING(KA):	**22 KAIC**	**FEEDER SIZE**	**4#2, 1#6G IN 1-1/2"C**	**FEEDING SOURCE:**	**DSB**
MAIN BREAKER TYPE	**MCB**	**MAIN BREAKER RATING (A):**	**100A**	**BRANCH C.B TYPE**	**BOLT-ON**

Load Designation	Wiring	C/B (A)	CT NO	Phase Load in VA AØ	BØ	CØ	CT NO	C/B (A)	Wiring	Load Designation
RACK	2#12, 1#12G–3/4"C.	20	1	550			2	20	2#12, 1#12G–3/4"C.	LTG – THEATER
				55.5						
RACK	2#12, 1#12G–3/4"C.	20	3		550		4	20	2#12, 1#12G–3/4"C.	LTG – THEATER
					111					
RACK	2#12, 1#12G–3/4"C.	20	5			360	6	20	2#12, 1#12G–3/4"C.	LTG – THEATER
						111				
REC – THEATER	2#12, 1#12G–3/4"C.	20	7	360			8	20	2#12, 1#12G–3/4"C.	LTG – EXHIBIT
				37						
REC – THEATER	2#12, 1#12G–3/4"C.	20	9		300		10	20	2#12, 1#12G–3/4"C.	LTG – EXHIBIT
					148					
REC – THEATER	2#12, 1#12G–3/4"C.	20	11			300	12	20	2#12, 1#12G–3/4"C.	LTG – EXHIBIT
						74				
REC – THEATER SEATS	2#12, 1#12G–3/4"C.	20	13	300			14	20	2#12, 1#12G–3/4"C.	LTG – EXHIBIT
				74						
REC – THEATER	2#12, 1#12G–3/4"C.	20	15		360		16	20	2#12, 1#12G–3/4"C.	LTG – EXHIBIT
					92.5					
PROJECTOR	2#12, 1#12G–3/4"C.	20	17			384	18	20	2#12, 1#12G–3/4"C.	LTG – EXHIBIT
						92.5				
PROJECTOR	2#12, 1#12G–3/4"C.	20	19	384			20	20	2#12, 1#12G–3/4"C.	LTG – EXHIBIT
				74						
REC – EXHIBIT 2008	2#12, 1#12G–3/4"C.	20	21		300		22	20	2#12, 1#12G–3/4"C.	LTG – ENTRANCE 2000
					74					
REC – EXHIBIT 2008	2#12, 1#12G–3/4"C.	20	23			300	24	20	2#12, 1#12G–3/4"C.	LTG – ENTRANCE 2000
						92.5				
REC – EXHIBIT 2008	2#12, 1#12G–3/4"C.	20	25	300			26	20	2#12, 1#12G–3/4"C.	LTG – ENTRANCE 2000
				55.5						
SPARE		20	27				28	20		SPARE
REC – EXHIBIT 2008	2#12, 1#12G–3/4"C.	20	29			360	30	20	2#12, 1#12G–3/4"C.	REC CONV. – EXH. 2008
						1080				
REC – EXHIBIT 2008	2#12, 1#12G–3/4"C.	20	31	360			32	20		SPARE
REC – PRINTER	2#12, 1#12G–3/4"C.	20	33		1000		34	20		SPARE
SPARE		20	35				36	20		SPARE
SPARE		20	37				38	20		SPARE
SPARE		20	39				40	20		SPARE
SPARE		20	41				42	20		SPARE
CONNECTED LOAD PER PHASE IN VA				2550	2936	3154				
TOTAL CONNECTED LOAD IN KVA				8.6395						
TOTAL DEMAND LOAD IN AMPS				21.58						

PANEL TYPE: NEMA 1 **MOUNTING: RECESSED**
COPPER BUS, EQUIP. GROUND BAR

PANEL SCHEDULE

PANEL NAME:	COMPUTER PANEL	**LOCATION:**	STORAGE 1014	**MOUNTING:**	RECESSED
VOLTAGE/PHASE:	208/120V	**PANEL (AMP)**	200A	**FREQUENCY:**	60 Hz
PANEL SHORT CIRCUIT RATING(KA):	EXISTING	**FEEDER SIZE**	**4#4/0,1#4 GND IN 2-1/2"C.**	**FEEDING SOURCE:**	DSB
MAIN BREAKER TYPE	MCB	**MAIN BREAKER RATING (A):**	200A	**BRANCH C.B TYPE**	BOLT-ON

Load Designation	Wiring	C/B (A)	CT NO	Phase Load in VA AØ	BØ	CØ	CT NO	C/B (A)	Wiring	Load Designation
DAS SYSTEM – SOLAR	2#12, 1#12G–3/4"C	20	1	300			2	20		SPARE
SPARE		20	3				4	20		SPARE
SPARE		20	5			180	6	20	2#12, 1#12G–3/4"C	REC– CONF. RM 214
SPARE		20	7	180			8	20	2#12, 1#12G–3/4"C	REC – OFFICE 202
SPARE		20	9		180		10	20	2#12, 1#12G–3/4"C	REC – OFFICE 202
SPARE		20	11			455	12	20	EXISTING TO REMAIN	IG REC – OPEN OFFICE 201
SPARE		20	13	455			14	20	EXISTING TO REMAIN	IG REC – STAFF 2007
IG REC – OPEN OFFICE 201	2#12, 1#12G–3/4"C	20	15		455		16	20	EXISTING TO REMAIN	IG REC – LIEBERT 2001
					455					
IG REC – OPEN OFFICE 201	2#12, 1#12G–3/4"C	20	17			455	18	20	EXISTING TO REMAIN	IG REC – CNTLR/MGR 208,209,210
						455				
IG REC – OPEN OFFICE 201	2#12, 1#12G–3/4"C	20	19	455			20	20	EXISTING TO REMAIN	IG REC – CNTLR/MGR 208,209,210
				455						
IG REC – OPEN OFFICE 201	2#12, 1#12G–3/4"C	20	21		455		22	20	EXISTING TO REMAIN	IG REC – RECEPTION 200
					455					
SPARE		20	23			455	24	20	EXISTING TO REMAIN	IG REC – JOHNSON 207
SPARE		20	25				26	20	EXISTING TO REMAIN	REC – CARPEZZI 205
				455						
SPARE		20	27		200		28	20	EXISTING TO REMAIN	IG REC – LIEBERT 204
SPARE		20	29				30	20		SPARE
SPARE		20	31				32	20	EXISTING TO REMAIN	IG REC – COMP. RM 2012
				180						
SPARE		20	33				34	20	EXISTING TO REMAIN	IG REC – COMP. RM 2012
					180					
SPARE		20	35				36	20	EXISTING TO REMAIN	IG REC – COMP. RM 2012
						180				
IG REC – OFFICE 202	2#12, 1#12G–3/4"C	20	37	455			38	20	EXISTING TO REMAIN	IG REC – STORAGE
				275						
SPARE		20	39		275		40	20	EXISTING TO REMAIN	IG REC – STORAGE
SPARE		20	41			275	42	20	EXISTING TO REMAIN	IG REC – STORAGE
CONNECTED LOAD PER PHASE IN VA				3210	2655	2180				
TOTAL CONNECTED LOAD IN KVA				8.045						
TOTAL DEMAND LOAD IN AMPS				20.10						

PANEL TYPE: NEMA 1 **MOUNTING: RECESSED**
COPPER BUS, EQUIP. GROUND BAR,
NOTE: PANEL CONNECTED TO EXISTING SURGE PROTECTOR DEVICE

No.	Date	Revisions
0	02–18–25	RFP SET

Drawn by JL
Checked by SH
Project No. 40034G
Scale NONE
Date 02/18/2025

GREENMAN PEDERSEN, INC
2 EXECUTIVE BOULEVARD
SUITE 202
SUFFERN, NY 10901
Mechanical, Electrical & Structural Engineer:

ATZL, NASHER, & ZIGLER
234 North Main Street
New City, NY 10956
Civil Engineer:

RENOVATION OF ROCKLAND GREEN ADMINISTRATIVE HEADQUARTERS AND CONSTRUCTION OF AN IMMERSIVE THEATRE EXPERIENCE
TOWN OF CLARKSTOWN
COUNTY OF ROCKLAND
172 MAIN STREET
NANUET, NY 10954

MICHAEL SHILALE ARCHITECTS, L.L.P.
140 Park Avenue New City, NY 10956 Tel 845-708-9200
www.shilale.com

© COPYRIGHT, MICHAEL SHILALE ARCHITECTS, ALL RIGHTS RESERVED.

Drawing Title
ELECTRICAL PANEL SCHEDULES SHEET NO.2

Drawing No.
E402

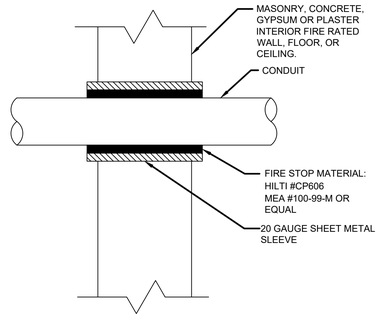

NOTES:

1. USE THIS DETAIL WHERE CONDUITS PASS THROUGH FIRE RATED WALL.
2. WHERE CONDUITS PASS THROUGH FOUNDATION WALLS, FLOOR SLAB ON EARTH, ROOF, CONCRETE BEAM, BRICK WALL, OR WATER PROOF FLOORS, USE PIPE SLEEVES.

1 / E501 CONDUIT PENETRATION IN FIRE RATED INTERIOR WALL

SCALE: NOT TO SCALE

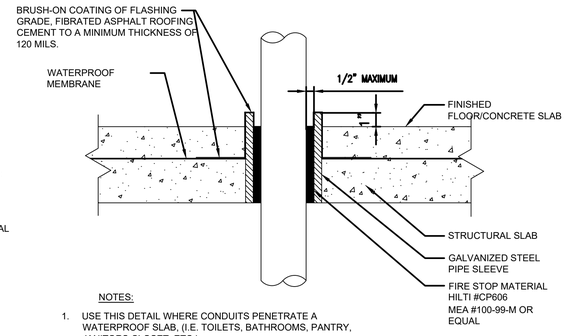

NOTES:

1. USE THIS DETAIL WHERE CONDUITS PENETRATE A WATERPROOF SLAB, (I.E. TOILETS, BATHROOMS, PANTRY, JANITORS CLOSET, ETC.)
2. WHERE EMT CONDUIT TRANSFERS FROM BUILDING INTERIOR TO EXTERIOR PROVIDE RGS/PVC CONDUIT. PROVIDE POLYWATER FOAM SEAL IN CONDUIT OPENING OF JUNCTION BOX CONNECTION LOCATED AT BUILDING EXTERIOR WHERE APPLICABLE.

2 / E501 CONDUIT PENETRATION THROUGH WATERPROOF SLAB

SCALE: NOT TO SCALE

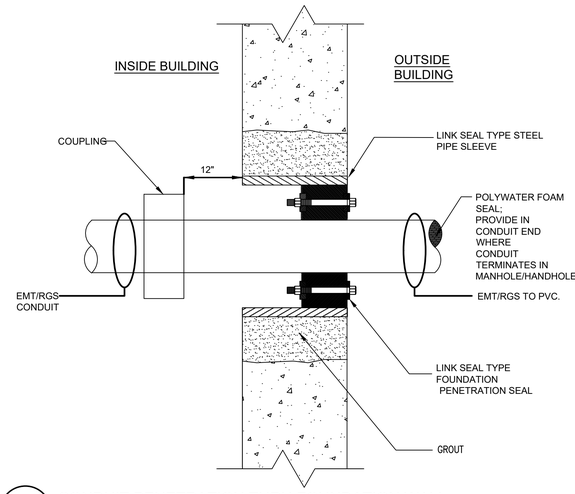

3 / E501 CONDUIT PENETRATION THRU FOUNDATION WALL

SCALE: NOT TO SCALE

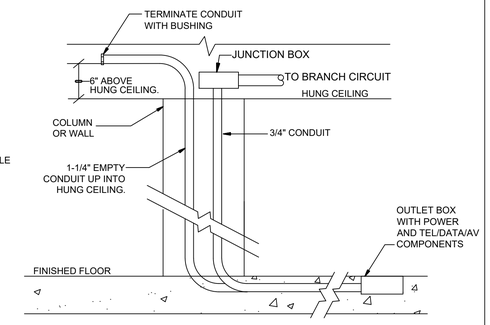

4 / E501 FLOOR BOX IN TRENCHED IN SLAB DETAIL

SCALE: NOT TO SCALE

FLOOR BOX DETAIL NOTE: WHERE HUNG CEILING DOES NOT EXIST, TERMINATE COMMUNICATION CONDUIT AND POWER JUNCTION BOX TIGHT TO CEILING SLAB.

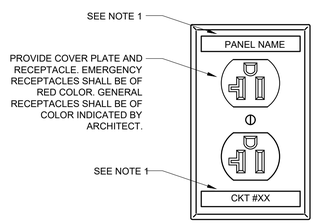

NOTES:

1. AT A MINIMUM, ELECTRICAL CONTRACTOR SHALL PROVIDE TYPED LABELS WITH PTOUCH MACHINE TO INDICATE PANEL NAME AND CIRCUIT NUMBER. COORDINATE EXACT NAMING WITH FACILITY'S PERSONNEL. IF FACILITY STANDARD IS ENGRAVED COVER PLATES, THE ELECTRICAL CONTRACTOR SHALL PROVIDE ENGRAVED COVER PLATES TO MATCH FACILITY REQUIREMENTS.

5 / E501 TYPICAL RECEPTACLE LABELING

SCALE: NOT TO SCALE

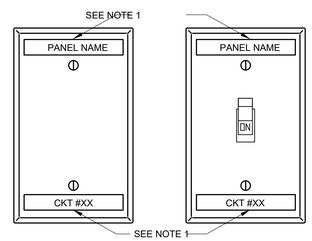

NOTES:

1. AT A MINIMUM, ELECTRICAL CONTRACTOR SHALL PROVIDE TYPED LABELS WITH PTOUCH MACHINE TO INDICATE PANEL NAME AND CIRCUIT NUMBER. COORDINATE EXACT NAMING WITH FACILITY'S PERSONNEL. IF FACILITY STANDARD IS ENGRAVED COVER PLATES, THE ELECTRICAL CONTRACTOR SHALL PROVIDE ENGRAVED COVER PLATES TO MATCH FACILITY REQUIREMENTS.

6 / E501 TYPICAL COVER PLATE AND SWITCH

SCALE: NOT TO SCALE

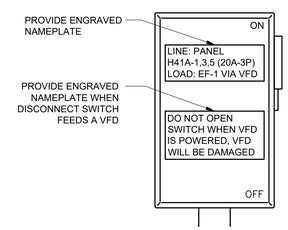

7 / E501 TYPICAL DISCONNECT SWITCH LABEL

SCALE: NOT TO SCALE

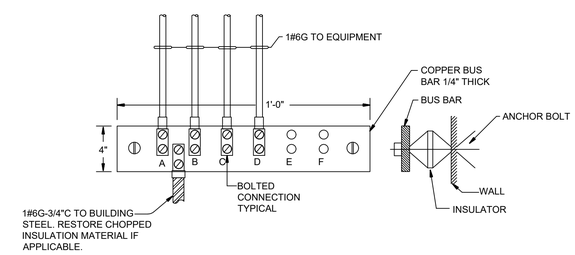

8 / E501 GROUND BUS BAR

SCALE: NOT TO SCALE

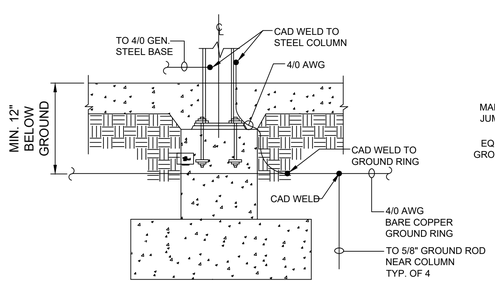

9 / E501 COLUMN GROUNDING DETAIL

NOT TO SCALE

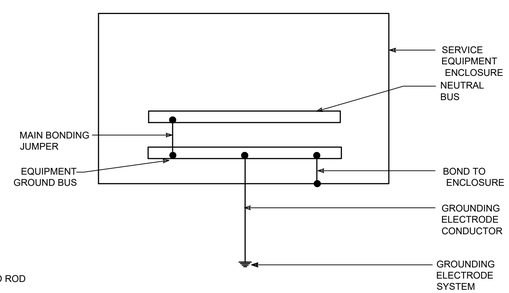

10 / E501 GROUNDING SYSTEM WITH GROUND BUS AND NEUTRAL BUS

NOT TO SCALE

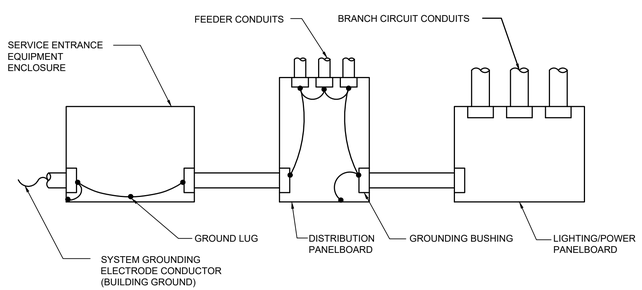

11 / E501 RACEWAY EQUIPMENT GROUNDING SYSTEM

NOT TO SCALE

No.	Date	Revisions
0	02-18-25	RFP SET

Drawn by JL
Checked by SH
Project No. 40034G
Scale NONE
Date 02/18/2025

GREENMAN PEDERSEN, INC
2 EXECUTIVE BOULEVARD
SUFFERN, NY 10901
Mechanical, Electrical & Structural Engineer:

ATZL, NASHER, & ZIGLER
234 North Main Street
New City, NY 10956
Civil Engineer:

RENOVATION OF ROCKLAND GREEN ADMINISTRATIVE HEADQUARTERS AND CONSTRUCTION OF AN IMMERSIVE THEATRE EXPERIENCE

172 MAIN STREET
NYACK, NY 10994

TOWN OF CLARKSTOWN
COUNTY OF ROCKLAND

MICHAEL SHILALE ARCHITECTS, L.L.P.
140 Park Avenue New City, NY 10956 Tel 845-709-9200
www.shilale.com

© COPYRIGHT, MICHAEL SHILALE ARCHITECTS, ALL RIGHTS RESERVED.

Drawing Title
ELECTRICAL DETAILS

Drawing No.
E501

GENERAL NOTES:

1. ALL WIRING, POWER, CONDUCTORS, CONDUITS ETC. SHALL MEET CURRENT NANUET, NY BUILDING CODE REQUIREMENTS.

2. ALL WORK SHALL BE IN ACCORDANCE WITH THE 2020 NYS BUILDING CODE, 2020 NYS UNIFORM CODE, CHAPTER 70, NFPA 72, NFPA 720, NFPA 70, AND 2020 NEC.

3. COMPLETE FIRE ALARM INSTALLATION SHALL COMPLY WITH THE LATEST REQUIREMENTS OF ADA AND UL.

4. ALARM CIRCUITS SHALL BE SIZED TO A MAXIMUM OF 80% CAPACITY.

5. ALL FIRE ALARM EQUIPMENT SHALL BE INSTALLED WITH AESTHETICS IN MIND, AS FOLLOWS: PAINT ALL NEW CONDUIT AND BOXES TO MATCH EXISTING CONDITIONS, PATCH AND PAINT LOCATIONS OF REMOVED BOXES TO MATCH EXISTING.

6. MINIMUM CONDUIT SIZE 3/4". TYPE OF RACEWAY SHALL BE EMT. SIZE AND TYPE OF WIRE SHALL BE AS PER MANUFACTURER'S REQUIREMENTS AND AS APPROVED BY AUTHORITIES HAVING JURISDICTION, U.O.N.

7. ALL DEVICE WIRING SHALL BE SUPERVISED SO THAT THE FACP WILL BE NOTIFIED IN THE EVENT OF ANY RUPTURE/BREAK IN THE WIRE.

8. LOCATION OF DEVICES AND EQUIPMENT ARE APPROXIMATE. FINAL LOCATIONS MUST BE DETERMINED ACCORDING TO THE SITE CONDITIONS.

9. DEVICES AND EQUIPMENT ARE SHOWN DIAGRAMMATIC, SIZES AND LOCATION OF EQUIPMENT AND WIRING ARE SHOWN TO SCALE WHERE POSSIBLE, BUT MAY BE DISTORTED FOR CLARITY ON THE DRAWINGS. FINAL LOCATION OF EQUIPMENT SHALL BE AS APPROVED BY THE ARCHITECT OR THEIR REPRESENTATIVE. IT IS NOT WITHIN THE SCOPE OF DRAWINGS TO SHOW ALL NECESSARY BENDS, OFFSETS, PULL BOXES AND OBSTRUCTIONS. IT SHALL BE THE RESPONSIBILITY OF CONTRACTOR TO INSTALL HIS WORK TO CONFORM TO THE STRUCTURE, PRESERVE HEADROOM AND KEEP OPENINGS AND PASSAGEWAYS CLEAR.

10. CONTRACTOR SHALL VISIT AND CAREFULLY EXAMINE THE AREAS AFFECTED BY THIS WORK TO BECOME FAMILIAR WITH EXISTING CONDITIONS AND WITH THE DIFFICULTIES THAT WILL ATTEND THE EXECUTION OF THIS WORK.

11. VERIFY LOCATIONS AND QUANTITY OF ALL EQUIPMENT WITH DRAWINGS OR INTERIOR DETAILS. IN LOCATING BOXES OR DEVICES, ALLOW FOR OVERHEAD PIPES, DUCTS, MECHANICAL EQUIPMENT, VARIATIONS IN FIREPROOFING AND PLASTERING, WINDOW AND DOOR TRIM, PANELING, HUNG CEILING, ETC., AND CORRECT ANY INACCURACY WITHOUT ADDITIONAL EXPENSE TO OWNER.

12. DIVISION 26 CONTRACTOR IS RESPONSIBLE FOR ALL POWER CONNECTIONS. DIVISION 28 CONTRACTOR IS RESPONSIBLE FOR LOW-VOLTAGE AND FIRE ALARM MODULE CONNECTIONS.

13. THESE DRAWINGS WERE PREPARED FROM AVAILABLE INFORMATION PROVIDED BY THE OWNER AND FIELD SURVEY INFORMATION COMPILED BY THE ENGINEER FOR THE PURPOSE OF ENGINEERING DESIGN. CONTRACTOR SHALL VERIFY ALL DIMENSIONS, ELEVATIONS, LOCATIONS, SIZES AND CONDITIONS AT THE SITE, INCLUDING EXAMINING ANY SUBSTRATES, AND REPORT ANY DISCREPANCIES TO THE ENGINEER PRIOR TO BEGINNING INSTALLATION OR FABRICATION OF THE WORK.

14. CONTRACTOR SHALL MAINTAIN ORDERLY HOUSEKEEPING DURING CONSTRUCTION, AND UPON SUBSTANTIAL COMPLETION, PERFORM FINAL CLEANUP. CONTRACTOR SHALL REMOVE ALL CONSTRUCTION RUBBISH, SCAFFOLDING, EQUIPMENT, TEMPORARY PROTECTION, TEMPORARY FIELD STRUCTURES, AND OTHER MATERIALS OR EQUIPMENT THAT WAS REQUIRED IN CONNECTION WITH THE WORK, BUT NOT A PERMANENT PART THEREOF.

15. CONTRACTOR SHALL PROVIDE A DRAWING AT THE MAIN FACP SHOWING THE LOCATIONS OF ALL FIRE ALARM DEVICES.

16. ALL FIRE ALARM CIRCUITS SHALL BE WIRED NFPA STYLE 4/Y/B (CLASS B) WITH THE EXCEPTION OF THE NETWORK CIRCUIT WHICH SHALL BE NFPA STYLE 7 (CLASS A WITH ISOLATION). DUAL CLASS B NETWORKING IS NOT STYLE 7 AND WILL NOT BE APPROVED. ALL AUDIBLE AND VISUAL CIRCUITS SHALL BE STYLE Y/CLASS B UNLESS THE CONTRACT DRAWINGS INDICATE NYC SPLIT A/B. A/B CIRCUITS SHALL BE WIRED SO THAT EVERY OTHER DEVICE IS WIRED ON AN ALTERNATE CIRCUIT.

17. CONDUITS MAY NOT ENTER THE TOP OF ANY FIRE ALARM CONTROL EQUIPMENT CABINET.

18. PATCH AND PAINT LOCATIONS OF REMOVED BOXES TO MATCH EXISTING, RESTORE SURFACES TO ORIGINAL CONDITIONS. REFER TO ARCHITECTURAL DETAILS.

19. ALL FIRE ALARM CABINETS AND JUNCTION BOXES SHALL BE PAINTED FIRE DEPARTMENT RED. FIRE ALARM CABINETS SHALL BE CLEARLY LABELED WITH A NY APPROVED LAMINATE ENGRAVED LABEL.

20. ALL FIRE ALARM WIRE SHALL BE CLEARLY LABELED IN JUNCTION BOXES AND CABINETS. ALL TERMINALS SHALL BE NUMBERED AND LABELED. ALL CONNECTIONS SHALL BE EITHER SOLDERED, APPROVED TERMINAL STRIPS, APPROVED WIRE NUTS (APPROVED TEMPERATURE), OR SCOTCH LOCKS.

21. ALL LOW VOLTAGE FIRE ALARM CONDUCTORS SHALL BE PROTECTED BY EITHER BUILDING CONSTRUCTION OR CONDUIT TO 8 FEET ABOVE THE FINISHED FLOOR. MECHANICAL AND ELECTRICAL ROOMS, AND OTHER LOCATIONS SUBJECT TO MECHANICAL DAMAGE SHALL BE IN FULL RIGID CONDUIT. IN ALL OTHER AREAS, NYC APPROVED WIRE MAY BE RUN WITHOUT CONDUIT ABOVE 8 FT. PROVIDED IT MEETS NYS CODES AND CONNECTS TO BUILDING CONSTRUCTION USING NYS APPROVED MEANS.

22. FIRE ALARM CABLES SHALL NOT BE MIXED WITH NON FIRE ALARM CABLING. LOW VOLTAGE FIRE ALARM CABLING SHALL NOT BE MIXED OR WIRED NEAR ANY AC CIRCUIT.

23. ALL WIRING FOR FIRE ALARM SYSTEM SHALL BE FLUOROPOLYMER 'TEFLON' TYPE CABLING AND SHALL MEET THE REQUIREMENTS UL 1424 AND UL 910 AS FOLLOWS:

24. ALL NOTIFICATION CIRCUITS SHALL BE A MINIMUM OF 14 AWG AND ALL OTHER LOW VOLTAGE FIRE ALARM CIRCUITS SHALL BE 16 AWG MINIMUM.

25. POLARITY SHALL BE OBSERVED ON ALL CIRCUITS. T-TAPPING SHALL NOT BE ALLOWED ON ANY NOTIFICATION CIRCUITS (HORN, STROBE OR SPEAKER). T-TAPPING SHALL NOT BE PERMITTED ON ADDRESSABLE CIRCUITS WITHOUT THE EXPRESS PERMISSION OF THE ENGINEER.

26. ALL WIRING SHALL BE INSPECTED TO ASSURE THERE ARE NO OPENS, SHORTS OR EARTH GROUNDS.

27. SHIELDED CONDUCTORS OR RUNNING IN SEPARATE RACEWAY SHALL BE AS INSTRUCTED BY THE FIRE ALARM MANUFACTURER'S DOCUMENTATION. ALL NON-POWER LIMITED WIRING, INCLUDING CIRCUITS FOR NON POWER LIMITED CENTRALIZED AMPLIFIERS SHALL BE RUN IN A SEPARATE RACEWAY.

28. ALL REMOTE FIRE ALARM CONTROL CABINETS (DATA GATHERING PANELS (DGP), TTB(S), FARAS, ETC.) SHALL INCLUDE AN INTERNAL TAMPER EACH SHALL ALSO INCLUDE A SMOKE DETECTOR MOUNTED ON THE CEILING DIRECTLY ABOVE IT SHOULD ONE OR MORE NOT ALREADY BE SHOWN ON THE PLANS IN THE ROOM THAT IT IS MOUNTED IN.

29. ALL CEILING MOUNT DEVICES MUST BE SECURELY FASTENED TO BUILDING CONSTRUCTION FROM SLAB ABOVE.

30. LOCATION OF DEVICES AND EQUIPMENT ARE APPROXIMATE. FINAL LOCATIONS MUST BE DETERMINED ACCORDING TO THE SITE CONDITIONS. DEVICE LOCATIONS MUST BE READILY ACCESSIBLE TO ALLOW FOR MAINTENANCE AND REPAIR.

31. ALL AREA SMOKE DETECTORS SHALL BE PHOTO-ELECTRIC TYPE.

32. SMOKE DETECTORS MUST BE MOUNTED AT LEAST 3 FT AWAY FROM ANY AIR REGISTER.

33. COMBINATION SMOKE AND CO DETECTORS SHALL BE FULLY ADDRESSABLE AND INCLUDE A SOUNDER BASE, EACH WITH AN INTERNAL SYNCHRONIZED TEMPORAL 3 AND 4 SOUNDERS, AND THE NECESSARY MONITORING DEVICES. IF POWERED SEPARATELY (24VDC), POWER TO THE DEVICE SHALL ALSO BE SUPERVISED.

34. MANUAL PULL STATION(S) SHALL BE MOUNTED 48 INCHES ABOVE THE FINISHED FLOOR TO MEET ADA HEIGHT REQUIREMENTS. DEVICE SHALL BE PAINTED FIRE DEPARTMENT RED. ALL MANUAL STATIONS SHALL BE INSTALLED SO THAT THEY ARE KEPT UN-OBSTRUCTED FROM OTHER BUILDING CONSTRUCTION.

35. ALL STROBE LIGHTS SHALL BE UL-1971 APPROVED/LISTED. THE MINIMUM CANDELA IS 15 UNLESS OTHERWISE NOTED. STROBES SHALL BE SHALL HAVE MINIMUM 5'-0" CLEARANCE FROM ANY OF OBSTRUCTIONS. A 15/75 STROBE MAY BE UTILIZED WHERE 15 CANDELA STROBES MEET NFPA REQUIREMENTS (CORRIDORS AND 20 X 20 SPACES). STROBES SHALL BE SYNCHRONIZED AT LINE OF SITE.

36. NOTIFICATION DEVICES THAT INCLUDE A STROBE SHALL BE MOUNTED SUCH THAT THE ENTIRE LENS IS NOT LESS THAN 80 IN. AND NOT GREATER THAN 96 IN. ABOVE THE FINISHED FLOOR, U.O.N. WHERE LOCAL CONDITIONS DIFFER INSTALL THE STROBES AND/OR HORNS AT 6" BELOW THE CEILING.

37. ALL AUXILIARY RELAYS F SHALL BE WIRED A MAXIMUM OF 3 FT FROM THE CONTROLLED DEVICE. THE AUXILIARY RELAY SHALL FUNCTION WITHIN THE REQUIRED VOLTAGE AND CURRENT OF THE CONTROLLED INTERPOSING RELAYS SHALL BE INCLUDED AND POWERED BY THE FIRE ALARM CONTROL PANEL IN A FAIL-SAFE (FIRE FUNCTION) POSITION. POWER TO THE INTERPOSING RELAY SHALL BE MONITORED BY THE FIRE ALARM SYSTEM.

38. EACH FIRE ALARM INITIATING AND INDICATING CIRCUIT SHALL BE ELECTRICALLY SUPERVISED.

39. A CENTRAL STATION DIALER AND TWO DEDICATED PHONE LINES SHALL BE PROVIDED. THE DIALER SHALL BE CAPABLE OF SENDING THE FOLLOWING EVENTS: ALARM, MANUAL STATION, SUPERVISORY, TROUBLE, AND CARBON MONOXIDE. OWNER TO OBTAIN PHONE LINE AND CENTRAL STATION PROVIDER. OWNER TO COORDINATE WITH CONTRACTOR.

40. CONTRACTOR SHALL SUBMIT SHOP DRAWINGS, CALCULATIONS, AND MANUFACTURERS' DATA SHEETS ON ALL EQUIPMENT AND MATERIALS INDICATED ON THE DRAWINGS OR IN THE SPECIFICATIONS FOR APPROVAL BY OWNER AND ENGINEER. THE SHOP DRAWINGS, CALCULATIONS AND DATA SHEETS SHALL CONTAIN ALL NECESSARY DATA (I.E., MANUFACTURER, CATALOG NUMBER, SIZE, DIMENSIONS, CAPACITY, VOLTAGE DROPS, WIRING DETAILS AND ALL OTHER ENGINEERING DATA AND DETAILS NECESSARY) FOR COMPLETE CLARITY AND INSTALLATION.

41. LOCATIONS OF ALL FIRE ALARM EQUIPMENT SHALL BE SUBJECT TO FIRE DEPARTMENT INSPECTOR APPROVAL AND THE REQUIREMENTS OF 2020 NYS UNIFORM CODE. NO CHANGE OR MODIFICATION TO THE SYSTEM OR PLANS SHALL BE PERMITTED WITHOUT WRITTEN APPROVAL FROM THE ENGINEER OF IF ANY CHANGES ARE MADE TO THE DRAWINGS PRIOR TO OR DURING INSTALLATION, AS BUILT PLANS SHALL BE PREPARED BY THE ENGINEER AND FILED WITH THE APPROPRIATE NANUET NY AGENCIES FOR FINAL ACCEPTANCE.

42. THE CONTRACTOR SHALL PROVIDE THE NECESSARY DOCUMENTS REQUIRED FOR INSPECTION AND TO OBTAIN A FINAL LETTER OF APPROVAL. THIS SHALL INCLUDE 11X17 AS-BUILT DRAWING(S), AN NFPA PROGRAMMING MATRIX, AND BOTH THE STATEMENT OF OPERATION AND THE CONTRACTORS FORMS SIGNED AND SEALED BY THE APPROPRIATE PARTIES. THESE DOCUMENTS SHALL BE SUBMITTED AS NECESSARY TO THE NYC FIRE DEPARTMENT TO OBTAIN A FIRE ALARM INSPECTION. IF A LETTER OF NO APPROVAL IS ISSUED, THE CONTRACTOR SHALL CORRECT ALL ITEMS AND SUBMIT REQUIRED FORMS OF CORRECTIONS TO THE FIRE DEPARTMENT TO OBTAIN A FINAL LETTER OF APPROVAL AT NO ADDITIONAL COST.

43. THE CONTRACTOR SHALL PROVIDE THE OWNER WITH DOCUMENTATION FROM THE TOWN OF CLARKSTOWN FIRE DEPARTMENT OF BUILDINGS INDICATING THE SYSTEM HAS BEEN APPROVED.

44. THE CONTRACTOR SHALL BE RESPONSIBLE FOR REMOVING ANY AND ALL ABANDONED FIRE ALARM CABINETS, DEVICES, AND WIRE. PAINT, PATCH AND CLEANUP SHALL ALSO BE INCLUDED.

45. THE CONTRACTOR SHALL BE RESPONSIBLE FOR INTERFACING THE NEW SYSTEM WITH ANY EXISTING SYSTEM CONNECTED DEVICES (I.E. RELAYS, ETC.).

46. THE FIRE ALARM RISER DIAGRAM IS FOR DESIGN PURPOSES ONLY. FIRE ALARM CONTRACTOR SHALL PROVIDE A COMPLETE RISER DIAGRAM WITH ACTUAL FIELD WIRING REQUIRED.

47. INDICATION OF A RELAY INTERFACE MODULE SYMBOL "R" AT A FAN SYSTEM MOTOR (FAN ETC.) REPRESENTS ALL NECESSARY TECHNICAL MEANS TO ACCOMPLISH FAN SHUT DOWN AND RESTART. PROVIDE 4#14 IN 3/4"C FROM FACP TO THE MODULE AND 2#12 IN 3/4"C TO THE RESPECTIVE STARTERS TO INCORPORATE FAN SHUTDOWN.

48. LOCATION OF "PB'S" (PULL BOXES) ARE SUGGESTED ROUTING, FINAL DETERMINATION IS TO BE DETERMINED IN THE FIELD TO SUIT FIELD CONDITIONS.

49. FIRE ALARM CONTROL PANEL FACP SHALL HAVE BACK-UP BATTERIES.

50. PROVIDE A DIGITAL ALARM COMMUNICATOR TRANSMITTER (DACT) & TWO (2) DEDICATED TELEPHONE LINES UPSTREAM OF ANY TELEPHONE SYSTEM IN THE BUILDING. THE DACT MUST BE CONNECTED TO THE FACP FOR ANNUNCIATION AT A FIRE DEPARTMENT APPROVED CENTRAL MONITORING CENTRAL STATION.

51. PROVIDE THE NUMBER OF CONDUITS AS REQUIRED. CONDUITS FILL OF ALL FIRE ALARM CABLES SHALL BE AS FOLLOWS:
    3/4" CONDUIT: UP TO 6 F.A. CABLES
    1" CONDUIT: UP TO 10 F.A. CABLES
    1 1/4" CONDUIT: UP TO 17 F.A. CABLES
    1 1/2" CONDUIT: UP TO 23 F.A. CABLES
    2" CONDUIT: UP TO 38 F.A. CABLES

52. THE RISER DIAGRAM INDICATES FIRE ALARM SYSTEM DEVICES, CONNECTIONS, CONDUIT RUNS, ETC. QUANTITY AND TYPE OF DEVICES SHALL BE AS INDICATED ON THE CONTRACT DRAWINGS AND/OR SPECIFICATIONS. SUBMIT ACTUAL RISERS, POINT-TO-POINT WIRING DIAGRAM INCLUDING WIRE AND CONDUIT SIZES AND INTERCONNECTIONS AS SHOP DRAWINGS. CONTRACTOR SHALL INSTALL FIRE ALARM SYSTEM ONLY AFTER ALL SHOP DRAWINGS ARE APPROVED BY THE ENGINEER OF RECORD.

53. PLENUM RATED MULTI-CONDUCTOR CABLE WITH CODE COMPLIANT J-HOOK SUPPORTS ABOVE THE GRID CEILING AND HARD CEILING SHALL BE ACCEPTABLE FOR FIRE ALARM WIRING INSTALLATION. ALL OTHER LOCATIONS WHERE THE INSTALLATION CANNOT BE CONCEALED, THE FIRE ALARM WIRING SHALL BE RUN IN EXPOSED MINIMUM 3/4" CONDUIT FOR ELECTRICAL ROOMS, MECHANICAL ROOMS, AND IN WIREMOLD FOR ALL OTHER AREAS, U.O.N. ALL THE EXPOSED CONDUITS BELOW 96" AFF SHALL BE RIGID GALVANIZED CONDUIT. FLEXIBLE MC TYPE FIRE ALARM CABLE IS NOT ACCEPTABLE.

54. DEVICE LAYOUT IS SHOWN FOR COVERAGE ONLY, CONTRACTOR SHALL OBTAIN PRECISE POINT TO POINT WIRING DIAGRAMS FOR EXACT QUANTITIES AND DEVICE LOCATIONS FROM CERTIFIED FIRE ALARM INSTALLER PRIOR TO INSTALLATION.

55. ALL FIRE ALARM CONDUIT PENETRATIONS THROUGH EXISTING WALLS, PARTITIONS, FLOORS AND SLABS THROUGHOUT THE BUILDING SHALL BE PROVIDED WITH FIRESTOPPING MATERIAL AS PER DETAILS SHOWN ON CONTRACT DRAWINGS.

56. IONIZATION TYPE SMOKE DETECTORS ARE NOT PERMITTED.

57. ALL WIRING FOR FIRE ALARM SYSTEM SHALL BE FLUOROPOLYMER 'TEFLON' TYPE CABLING AND SHALL MEET THE REQUIREMENTS UL 1424 AND UL 910 AS FOLLOWS:
    A. A MINIMUM TEMPERATURE RATING OF 150 DEGREES CELSIUS.
    B. A MINIMUM AVERAGE INSULATION THICKNESS OF 15 MILS.
    C. A MINIMUM AVERAGE JACKET THICKNESS OF 25 MILS.
    D. THE COLOR OF THE CABLE SHALL BE RED.
    E. THE CABLE SHALL BE A TYPE FPLP (PLENUM TYPE).
    F. THE CABLE SHALL BE VISUALLY MARKED EXTERNALLY THAT IT MEETS THE ABOVE REQUIREMENTS, AS IS LISTED BY UL.

61. SUBMIT AS BUILT UPON COMPLETION OF INSTALLATION TO THE ENGINEER AND THE BUILDING MANAGER. DRAWINGS ARE TO BE PREPARED USING AUTOCAD RELEASE R2004 OR ABOVE.

62. THIS CONTRACTOR MUST PREPARE ALL DOCUMENTATION REQUIRED FOR RECEIVING A PERMIT AND FOR FILING. THIS DRAWING IS FOR DESCRIPTION OF SCOPE OF WORK AND IS FOR REFERENCE ONLY. CONTRACTOR SHALL SUBMIT TO GREENMAN-PEDERSEN, INC. A COMPLETE SET OF DRAWINGS FOR REVIEW. SET SHALL INCLUDE A RISER DIAGRAM, FLOOR PLAN WITH POINT TO POINT WIRING, SEQUENCE OF OPERATIONS, MATRIX, CIRCUIT CALCULATIONS AND ALL APPLICABLE NOTES FOR FILING AND FOR INSTALLATION.

63. THE CONTRACTOR SHALL RETAIN A NY STATE PE TO SIGN AND SEAL ALL NECESSARY DOCUMENTS REQUIRED FOR INSPECTION AND TO OBTAIN A FINAL LETTER OF APPROVAL. IF A LETTER OF NO APPROVAL IS ISSUED, THE CONTRACTOR SHALL CORRECT ALL ITEMS AND SUBMIT A SIGNED AND SEALED CERTIFICATE OF CORRECTION TO THE NEW JERSEY FIRE DEPARTMENT TO OBTAIN A FINAL LETTER OF APPROVAL AT NO ADDITIONAL COST.

64. LOCATION OF DEVICES AND EQUIPMENT ARE APPROXIMATE. FINAL LOCATIONS MUST BE DETERMINED ACCORDING TO THE SITE CONDITIONS.

65. THE CONTRACTOR SHALL CONTRACT WITH THE OWNER'S FIRE ALARM VENDOR TO PROVIDE SERVICES RELATED TO THE BUILDING FIRE ALARM SYSTEM. THE WORK INCLUDES ALL NECESSARY FIRE ALARM SYSTEM SHUTDOWNS FOR GENERAL CONSTRUCTION ACTIVITIES, INCLUDING ANY SERVICES BY THE BUILDING FIRE ALARM VENDOR, TO SHUT DOWN THE SYSTEM AT THE BEGINNING OF WORK ACTIVITIES AND TO RE-ACTIVATE AT THE END OF WORK ACTIVITIES, WITH STANDARD BUILDING NOTIFICATIONS AND PROCEDURES INCLUDING MAINTAINING DAILY RECORD DOCUMENTATION, FIRE WATCH, ETC.

66. TESTS OF THE FIRE ALARM SYSTEM SHALL BE CONDUCTED IN THE PRESENCE OF FIRE INSPECTOR FROM HE TOWN OF CLARKSTOWN, NEW CITY, NEW YORK.

67. CONTRACTOR TO OBTAIN FIRE ALARM BUILDING VENDOR FROM OWNER. FIRE ALARM SYSTEM SHALL BE: HONEYWELL SILENT KNIGHT 6700, OR APPROVED EQUIVALENT.

DRAWING LIST

DWG NUMBER	DRAWING TITLE
FA001	FIRE ALARM GENERAL NOTES
FA002	FIRE ALARM RISER AND IO MATRIX
FA101	FIRE ALARM FIRST FLOOR - INSTALLATION
FA102	FIRE ALARM SECOND FLOOR - INSTALLATION

FIRE DETECTION & ALARM SYSTEM SYMBOL LIST

SYMBOL	DESCRIPTION
FACP / DACT	FIRE ALARM CONTROL PANEL MOUNTED CENTER LINE 4'-0" AFF. WITH INTEGRAL "DACT" DIGITAL ALARM COMMUNICATOR TRANSMITTER FOR CENTRAL STATION NOTIFICATION. SEMI-FLUSHED MOUNT ON AN EXISTING WALL.
FARA	FIRE ALARM REMOTE ANNUNCIATOR MOUNTED 4'-0" AFF. SURFACE MOUNTED ON WALL, SEMI-FLUSH ON NEW CONSTRUCTION.
75 G	WALL MOUNTED FIRE SIGNAL STROBE (NUMBERING INDICATES RATED CANDELA). STROBES SHALL BE WALL-MOUNTED SUCH THAT THE TOP OF STROBE LENS IS LOCATED AT 96" ABOVE THE FINISHED FLOOR OR 6" BELOW THE CEILING, WHICHEVER IS LOWER. IN NO CASES STROBE LENSE SHALL BE INSTALLED BELOW 80" A.F.F.
75 G	CEILING MOUNTED FIRE SIGNAL STROBE. (NUMBERING INDICATES RATED CANDELA)
CO 75	CEILING MOUNTED FIRE SIGNAL HORN WITH FIRE SIGNAL STROBE (NUMBERING INDICATES RATED CANDELA).
75 WP	WALL MOUNTED FIRE SIGNAL HORN WITH FIRE SIGNAL STROBE (NUMBERING INDICATES RATED CANDELA). HORN WITH FIRE SIGNAL STROBES SHALL BE WALL-MOUNTED SUCH THAT THE TOP OF STROBE LENS IS LOCATED AT 96" ABOVE THE FINISHED FLOOR OR 6" BELOW THE CEILING, WHICHEVER IS LOWER. SUBSCRIPT 'G' DENOTES WITH GUARD. "WP" INDICATES WEATHERPROOF. IN NO CASES STROBE LENSE SHALL BE INSTALLED BELOW 80" A.F.F.
S TOS	CEILING MOUNTED SMOKE DETECTOR. SUPERSCRIPT "TOS" DENOTES TOP OF STAIR SUPERSCRIPT "CO" DENOTES PROVIDE AS COMBINATION CARBON MONOXIDE SMOKE DETECTOR. PROVIDE WITH CO SOUNDER BASE.
F	FIRE ALARM PULL STATION WITH DOUBLE ACTION TYPE MOUNTED MIN 3'-6" AND MAX 4'-0" FROM THE FLOOR LEVEL TO THE ACTIVATING HANDLE.
CM	CONTROL MODULE (DIGITAL CONTACT)
MM	MONITORING MODULE (DIGITAL CONTACT)
R	24V RELAY OUTPUT
ATS	AUTOMATIC TRANSFER SWITCH

SCOPE OF WORK:

THE WORK REQUIRES PROVIDING A NEW FULLY FUNCTIONAL FIRE ALARM SYSTEM AS DETAILED IN THE CONTRACT DOCUMENTS AND SPECIFICATIONS. THE WORK GENERALLY REQUIRES THE FOLLOWING:

1. REMOVE EXISTING FIRE ALARM SYSTEM AND ITS COMPONENTS AFTER NEW APPROVED FIRE ALARM SYSTEM IS INSTALLED.
2. INSTALL NEW MANUAL AND AUTOMATIC FIRE ALARM SYSTEM.
3. RE-PROGRAM THE EXISTING COMBINATION OF FIRE ALARM AND SECURITY ALARM SYSTEM TO OPERATE AS TWO SEPARATE SYSTEMS.
4. COORDINATE WITH THE FIRE ALARM VENDOR FOR ANY ADDITIONAL ANCILLARY COMPONENTS REQUIRED FOR A FUNCTIONAL CODE COMPLIANT SYSTEM INSTALLATION.
5. PROVIDE NEW WIRING AND CONDUITS FOR CONNECTION TO NEW DEVICES AND EQUIPMENT AS REQUIRED FOR A COMPLETE SYSTEM INSTALLATION.
6. INSTALL NEW AUDIBLE/VISUAL DEVICES, AREA SMOKE DETECTORS, CO DETECTORS, ETC, AS INDICATED ON PLANS.

SPECIAL INSPECTIONS

SPECIAL INSPECTIONS REQUIRED IN ACCORDANCE WITH SECTION CHAPTER 17 AND THE APPLICABLE SECTIONS OF THE 2020 NEW YORK STATE INTERNATIONAL CODE ARE LISTED IN THE FOLLOWING TABLES:

THE CONTRACTOR MUST NOTIFY THE ENGINEER FOR CONTROLLED INSPECTIONS AT LEAST 72 HOURS BEFORE THE SPECIFIC WORK COMMENCES.

THE "AUTHORITY" SHALL BE RESPONSIBLE FOR THE FOLLOWING CONTROLLED INSPECTIONS:

FIRE-RESISTANT PENETRATIONS AND JOINTS

FIRE ALARM SYSTEM WIRING REQUIREMENT

FUNCTION	TYPE
ADDR. LOOP WIRING/DATA	1 TWISTED PAIR #14 AWG., U.O.N.
COMBINATION HORN/STROBE	2 PAIR #14 AWG, U.O.N.
HORN	1 PAIR #12 AWG, U.O.N.
STROBE	1 PAIR #12 AWG, U.O.N.
CONTROL	2 #14 AWG, U.O.N.
POWER	2#10 AWG POWER UON; SEE NOTE 2A.
CARBON MONOXIDE	3 PAIR #14 AWG (POWER, MONITOR ALARM)

NOTE 1A: VERIFY/COORDINATE WIRE SIZE REQUIREMENTS FOR DEVICES WITH SYSTEM MANUFACTURER; FINAL AWG SIZES TO FA NOTIFICATION AND INDICATING DEVICES ARE PER SYSTEM MANUFACTURER REQUIREMENTS.

NOTE 2A: UPON SELECTION OF FA SYSTEM MANUFACTURER; WHERE FA DEVICES ARE NOT INDICATED ON THE PLANS THAT REQUIRE 120V, 20A POWER CONNECTION: FOR RUNS 100-124FT, PROVIDE 2#6 AWG, RUNS 125-175FT, PROVIDE 2#4 AWG, AND RUNS 175-300FT, PROVIDE 2#2 AWG, U.O.N.

LIST OF DRAWINGS

FA001 FIRE ALARM GENERAL NOTES
FA002 FIRE ALARM RISER AND IO MATRIX
FA101 FIRE ALARM FIRST FLOOR - INSTALLATION
FA102 FIRE ALARM SECOND FLOOR - INSTALLATION
FA301 FIRE ALARM DETAILS

No.	Date	Revisions
0	02-18-25	RFP SET

Drawn by JL
Checked by SH
Project No. 40034G
Scale NONE
Date 02/18/2025

GREENMAN PEDERSEN, INC
8 EXECUTIVE BOULEVARD
SUITE 206
SUFFERN, NY 10901
Mechanical, Electrical & Structural Engineer:

ATZL, NASHER, & ZIGLER
234 North Main Street
New City, NY 10956
Civil Engineer:

RENOVATION OF ROCKLAND GREEN ADMINISTRATIVE HEADQUARTERS AND CONSTRUCTION OF AN IMMERSIVE THEATRE EXPERIENCE
170 MAIN STREET
NANUET, NY 10954
TOWN OF CLARKSTOWN
COUNTY OF ROCKLAND

MSA
MICHAEL SHILALE ARCHITECTS, L.L.P.
140 Park Avenue New City, NY 10956 Tel 845-708-9200
www.shilale.com

© COPYRIGHT, MICHAEL SHILALE ARCHITECTS, ALL RIGHTS RESERVED.

Drawing Title
FIRE ALARM GENERAL NOTES

Drawing No.
FA001

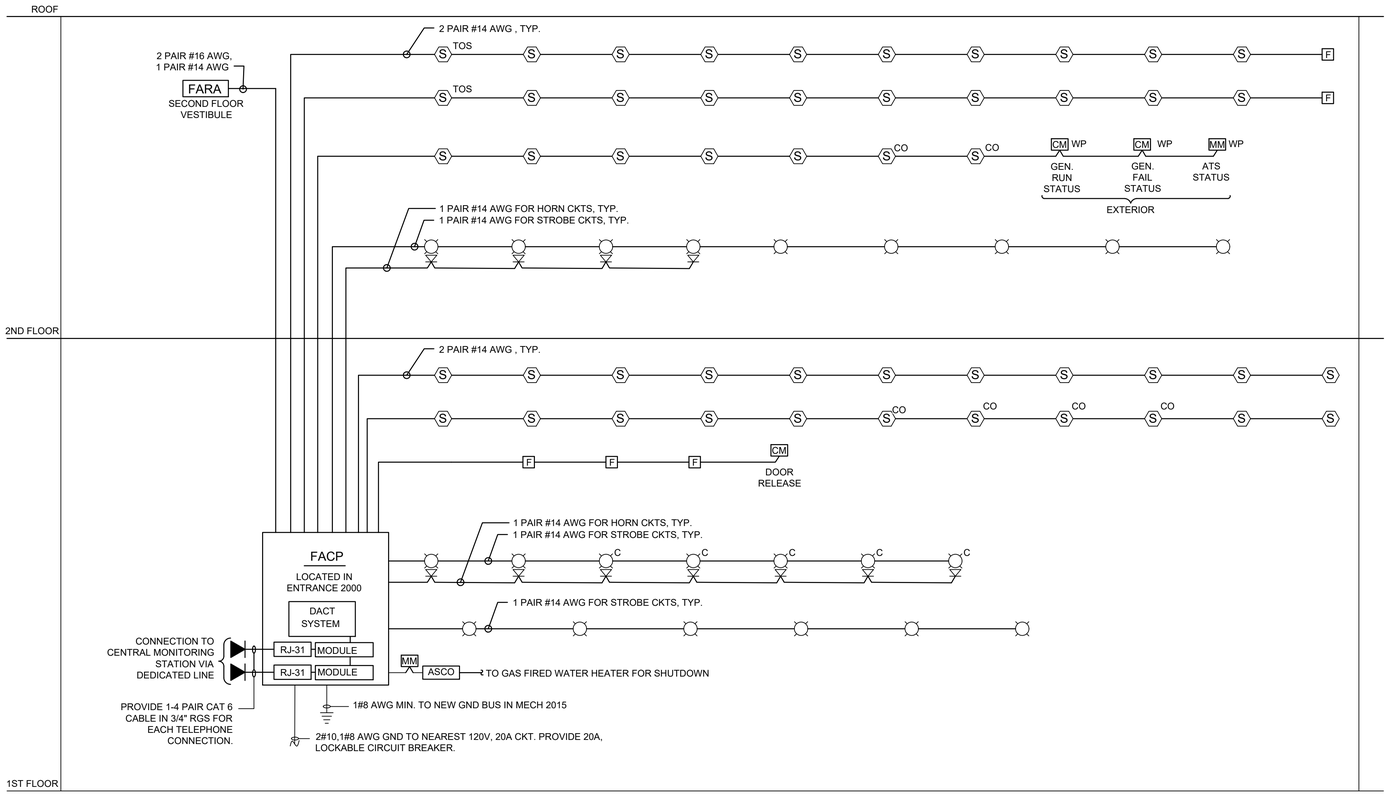

1 FA002 FIRE ALARM RISER DIAGRAM

NOT TO SCALE

FIRE ALARM RISER DIAGRAM NOTES:

1. ALL CONDUITS AND CONTROL PANELS SHALL BE GROUNDED.
2. EACH FIRE ALARM INITIATING AND INDICATING CIRCUIT SHALL BE ELECTRICALLY SUPERVISED.
3. ALL FIRE ALARM WIRING SHALL BE INSTALLED IN MIN. 3/4" METALLIC CONDUIT, UNLESS OTHERWISE SPECIFIED.

ABBREVIATIONS

A	AMPERE
AC	ALTERNATING CURRENT
AF	FUSE RATING IN AMPS
AFF	ABOVE FINISHED FLOOR
ARCH	ARCHITECTURAL
ATS	AUTOMATIC TRANSFER SWITCH
C	CONDUIT
CB	CIRCUIT BREAKER
CLG	CEILING
CKT(S)	CIRCUIT(S)
DWG	DRAWING
E	EXISTING TO REMAIN
ER	EXISTING TO BE REMOVED
ERR	EXISTING TO BE RELOCATED
EC	EMPTY CONDUIT
EOR	ENGINEER OF RECORD
FACP	FIRE ALARM CONTROL PANEL
FARA	FIRE ALARM REMOTE ANNUNCIATOR
G	GUARD
GEN	GENERATOR
GND	GROUND
JB	JUNCTION BOX
KVA	KILOVOLT AMPERE
KW	KILOWATT
LTG	LIGHTING
MTD	MOUNTED
N	NEUTRAL
N.C.	NORMALLY CLOSED
NJ	NEW JERSEY
N.O.	NORMALLY OPEN
P	POLE(S)
PB	PULL BOX
PNL	PANEL
PWR	POWER
RGC	RIGID GALVANIZED CONDUIT
SP	SPARE
SW	SWITCH
TTB	TERMINAL BOX
UON	UNLESS OTHERWISE INDICATED
V	VOLT
W	WATT
WP	WEATHER PROOF

SYSTEM OUTPUTS

		Control Unit Annunciation						Notification									
		ACTUATE COMMON ALARM SIGNAL	ACTUATE AUDIBLE ALARM SIGNAL	ACTUATE COMMON SUPERVISORY SIGNAL INDICATOR	ACTUATE AUDIBLE SUPERVISORY SIGNAL	ACTUATE COMMON TROUBLE SIGNAL INDICATOR	ACTUATE AUDIBLE COMMON TROUBLE SIGNAL	ACTIVATE VISUAL/AUDIO DEVICES	DISPLAY/PRINT CHANGE OF STATUS	TRANSMIT AUTOMATIC ALARM SIGNAL TO SUPERVISING STATION	TRANSMIT MANUAL SIGNAL TO SUPERVISING STATION	TRANSMIT SUPERVISORY SIGNAL TO SUPERVISING STATION	TRANSMIT CO ALARM SIGNAL TO SUPERVISING STATION	TRANSMIT TROUBLE SIGNAL TO SUPERVISING STATION	ACTIVATE A TEMPORAL 4 SIGNAL ON ACTIVATED CO SOUNDER BASES	SHUT DOWN CO PRODUCING EQUIPMENT	
SYSTEM INPUTS		A	B	C	D	E	F	G	H	I	J	K	L	M	N	O	
1	MANUAL FIRE ALARM BOXES	X	X					X	X		X						1
2	AREA SMOKE DETECTORS	X	X					X	X	X							2
3	HEAT DETECTORS	X	X					X	X	X							3
4	CARBON MONOXIDE DETECTORS AT SOURCE			X	X								X		X	X	4
5	CARBON MONOXIDE DETECTORS REMOTE FROM SOURCE			X	X								X		X		5
6	FIRE ALARM AC FAILURE					X	X		X					X			6
7	FIRE ALARM SYSTEM LOW BATTERY					X	X		X					X			7
8	OPEN CIRCUIT					X	X		X					X			8
9	GROUND FAULT					X	X		X					X			9
10	NOTIFICATION APPLIANCE CIRCUIT SHORT					X	X		X					X			10
11	DRILL SWITCH							X									11
		A	B	C	D	E	F	G	H	I	J	K	L	M	N	O	

2 FA002 FIRE ALARM I/O MATRIX

NOT TO SCALE

No.	Date	Revisions
0	02-18-25	RFP SET

Drawn by JL
Checked by SH
Project No. 40034G
Scale NONE
Date 02/18/2025

GREENMAN PEDERSEN, INC
8 EXECUTIVE BOULEVARD
SUITE 200
SUFFERN, NY 10901

Mechanical, Electrical & Structural Engineer:

ATZL, NASHER, & ZIGLER
234 North Main Street
New City, NY 10956

Civil Engineer:

RENOVATION OF ROCKLAND GREEN ADMINISTRATIVE HEADQUARTERS AND CONSTRUCTION OF AN IMMERSIVE THEATRE EXPERIENCE

172 MAIN STREET
NANUET, NY 10954

TOWN OF CLARKSTOWN
COUNTY OF ROCKLAND

MICHAEL SHILALE ARCHITECTS, L.L.P.
140 Park Avenue New City, NY 10956 Tel 845-709-9200
www.shilale.com

© COPYRIGHT, MICHAEL SHILALE ARCHITECTS, ALL RIGHTS RESERVED.

Drawing Title
FIRE ALARM RISER AND IO MATRIX

Drawing No.
FA002

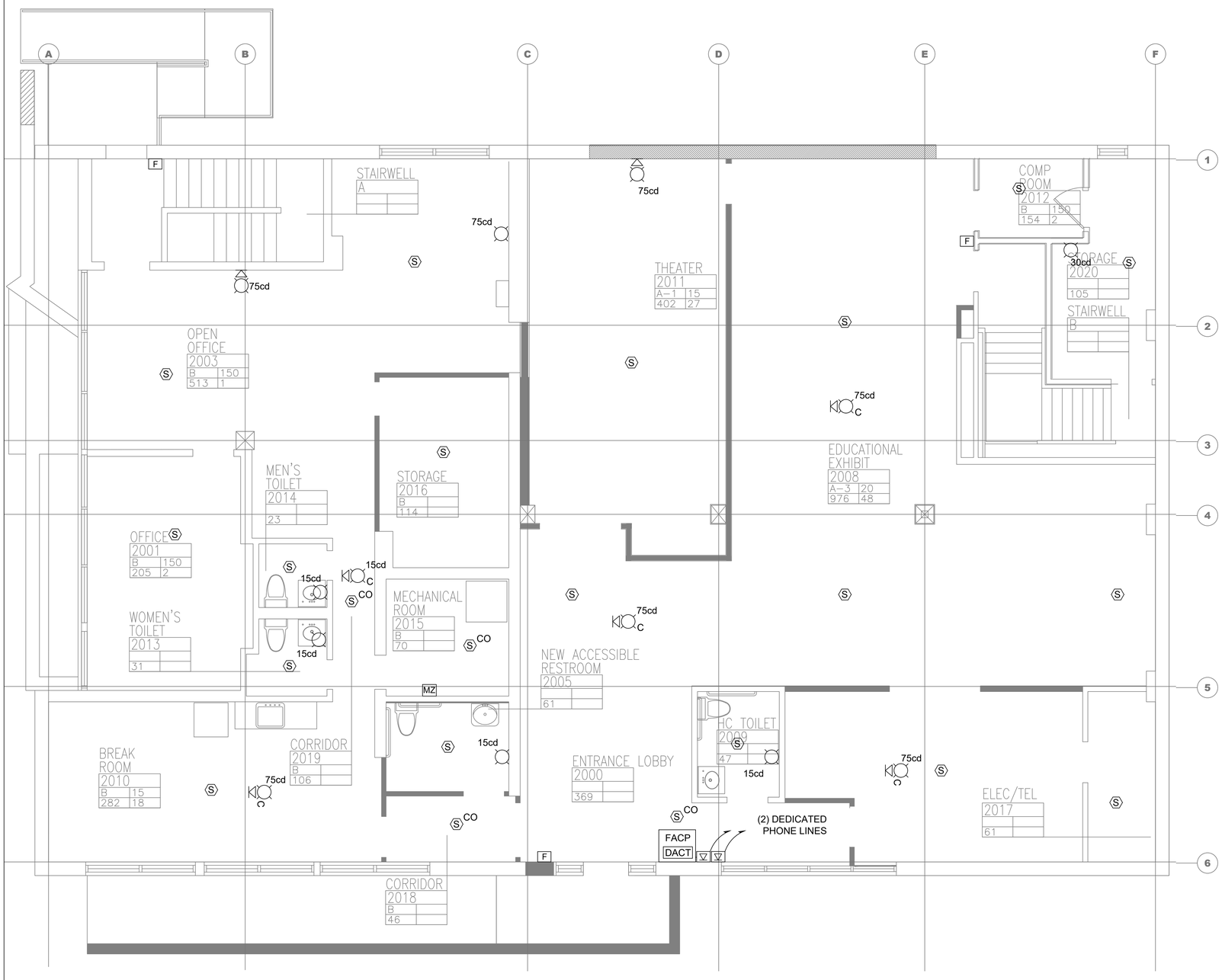

1 FA101 FIRE ALARM FIRST FLOOR PLAN - INSTALL

SCALE: 1/4" = 1'-0"

PLAN NORTH

PLAN NOTES:

1. PROVIDE NEW ADDRESSABLE FIRE ALARM SYSTEM WITH COMBINATION CO DETECTION. COORDINATE LOCATION OF PANELS WITH BUILDING REPRESENTATIVE.
2. ALL WORK DONE OUTSIDE THE AREA OF WORK MUST RECEIVE PRIOR AUTHORIZATION BY THE OWNER'S REPRESENTATIVE.
3. EXISTING FIRE ALARM SYSTEM TO REMAIN UNTIL NEW SYSTEM IS INSTALLED AND APPROVED.
4. PROVIDE CONTROL MODULES TO FOR HVAC UNIT SHUT DOWN AS REQUIRED.
5. DEVICES MOUNTED AT BUILDING EXTERIOR SHALL BE INSTALLED IN NEMA 3R, WEATHERPROOF ENCLOSURE(S).
6. ALL FA CONTROL MODULES AND MONITORING MODULES SHALL BE WITHIN 3'-0" FT OF THE DEVICE IT IS CONTROLLING.
7. FIRE ALARM PANELS SHALL BE SEMI-FLUSH MOUNTED.
8. ACTIVATION OF THE CARBON MONOXIDE DETECTOR SHALL AUTOMATICALLY SHUTDOWN THE EXISTING GAS-FIRED HOT WATER HEATERS. PROVIDE ALL REQUIRED APPURTENANCES FOR SHUTDOWN.
9. PROVIDE ASCO TO SHUT DOWN GAS FIRED WATER HEATER. PROVIDE 1P,20A CB IN NEAREST 208V PANEL TO POWER ASCO; RUN 3#12 IN 3/4"C TO PANEL.VERIFY POWER SOURCE IN FIELD.
10. LOCATE BPS-6A BOOSTER SUPPLY POWER PANELS IN A 2-HOUR RATED ROOM (I.E. ELEC RM).
11. PROVIDE AND INSTALL CO DETECTORS, UL LISTED (UNDER UL 2075 STANDARD) WITH BUILT IN SOUNDER IS SPACED 60FT ON CENTER OR PLACED AS SPECIFIED BY MANUFACTURER WHERE DEVICE SPACE COVERAGE IS LESS THAN 60 FT. CO DETECTORS SHALL ANNUNCIATE LOCALLY "TEMPORAL 4" CODE THROUGH THE BUILT-IN SOUNDER BASE BY BOTH VISUAL AND AUDIBLE MEANS.
12. PROVIDE AND INSTALL NEW FIRE ALARM SMOKE/CO DETECTION AND ALARM SYSTEM IN ACCORDANCE WITH THE 2020 NYS BUILDING CODE. RUN 2#10,1#12G IN 3/4"C FROM FIRE ALARM PANEL TO 1P, 20A LOCKABLE CB IN PANEL.
13. PROVIDE AND INSTALL (DACT) TO SEND TROUBLE SIGNALS TO THE CLARKSTOWN FIRE DEPARTMENT'S APPROVED CENTRAL STATION. PROVIDE TWO (2) RJ-31X TELEPHONE JACKS WITH TWO (2) DEDICATED TELEPHONE LINES UPSTREAM OF ANY TELEPHONE SYSTEM IN THE BUILDING. THE RJ-31X JACKS SHALL BE MOUNTED NEXT TO THE DACT 6"X 6" IN THE HOFFMAN BOX. PROVIDE CONNECTION BETWEEN DACT SYSTEM AND THE PHONE COMPANY'S DEMARCATION POINT. RUN 4#12 AWG. IN 3/4" C. PROVIDE PRIMARY POWER FOR THE NEW DACT SYSTEM FROM 1P,20A LOCKABLE CB IN 208V PANEL. RUN 2#10,1#12G IN 3/4"C FROM DACT TO PANEL.
14. PROVIDE AND INSTALL (2) NEW DEDICATED TELEPHONE LINES FOR FIRE ALARM SYSTEM.

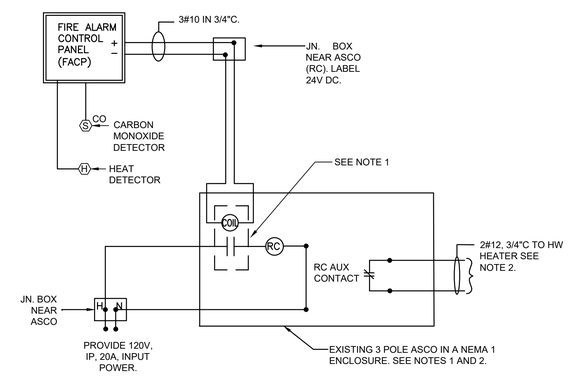

2 FA101 GAS-FIRED HOT WATER HEATER POWER SHUT-DOWN USING INTERRUPT SIGNAL FROM CO & HEAT DETECTOR SCHEMATIC WIRING DIAGRAM

SCALE: NONE

GAS-FIRED HOT WATER HEATER DETAIL NOTES:

1. GAS-FIRED WATER HEATER SHALL SHUT DOWN UPON ACTIVATION OF CARBON MONOXIDE AND HEAT DETECTORS.
2. PROVIDE NEW ASCO (EATON MODEL: C30CN-M-3-4-A-D-2-A0 WITH AUXILIARY CONTACTS AS REQUIRED) FOR SHUT DOWN OF WATER HEATER LOCATED IN ROOM 2015. THE RELAY SHOULD BE ACTIVATED BY FACP UPON ACTIVATION OF CARBON MONOXIDE DETECTION. THE ENTIRE COMBINATION OF ASCO AND ACCESSORY SHALL BE ASSEMBLED IN A NEMA ENCLOSURE AND SHALL BE INSTALLED NEAR THE HWH. ALL CONTACTS WIRED TO TERMINAL STRIPS FOR EASY CONNECTIONS.
3. ASCO NORMALLY CLOSED AUXILIARY CONTACT (ACCESSORY) SHALL BE INCORPORATED IN THE GAS-FIRED HOT WATER HEATER CONTROL CIRCUIT SHUT DOWN THE HOT WATER HEATER UPON ACTIVATION OF THE ASCO RC SWITCH AS INDICATED.
4. QUANTITIES OF RELAYS SHOWN FOR INFORMATION ONLY. PROVIDE QUANTITIES AS REQUIRED FOR COMPLETE OPERATION.

0 1/2 1
IF THIS BAR DOES NOT MEASURE 1", THEN DRAWING IS NOT TO FULL SCALE

No.	Date	Revisions
0	02-18-25	RFP SET

Drawn by JL
Checked by SH
Project No. 40034G
Scale
Date 02/18/2025

GREENMAN PEDERSEN, INC
2 EXECUTIVE BOULEVARD
SUITE 202
SUFFERN, NY 10901

Mechanical, Electrical & Structural Engineer:

ATZL, NASHER, & ZIGLER
234 North Main Street
New City, NY 10956

Civil Engineer:

RENOVATION OF ROCKLAND GREEN ADMINISTRATIVE HEADQUARTERS AND CONSTRUCTION OF AN IMMERSIVE THEATRE EXPERIENCE

TOWN OF CLARKSTOWN
COUNTY OF ROCKLAND

170 MAIN STREET
NYACK, NY 10994

MICHAEL SHILALE ARCHITECTS, L.L.P.
140 Park Avenue New City, NY 10956 Tel 845-708-9200
www.shilale.com

© COPYRIGHT, MICHAEL SHILALE ARCHITECTS, ALL RIGHTS RESERVED.

Drawing Title
FIRE ALARM FIRST FLOOR - INSTALLATION

Drawing No.
FA101

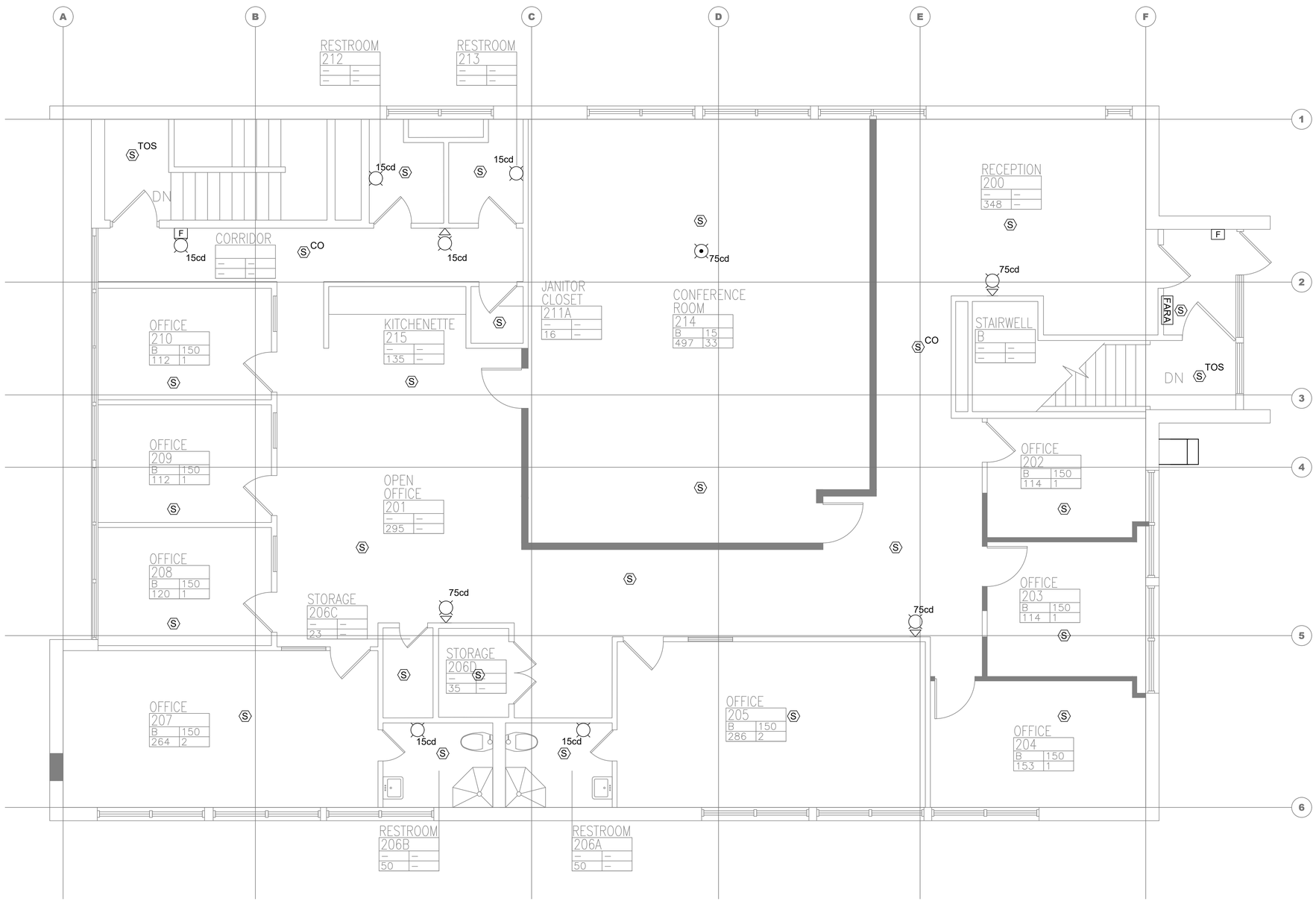

1 / FA102 FIRE ALARM SECOND FLOOR PLAN - INSTALL

SCALE: 1/4" = 1'-0"

PLAN NORTH

PLAN NOTES:

1. PROVIDE NEW ADDRESSABLE FIRE ALARM SYSTEM WITH COMBINATION CO DETECTION. COORDINATE LOCATION OF PANELS WITH BUILDING REPRESENTATIVE.
2. ALL WORK DONE OUTSIDE THE AREA OF WORK MUST RECEIVE PRIOR AUTHORIZATION BY THE OWNER'S REPRESENTATIVE.
3. EXISTING FIRE ALARM SYSTEM TO REMAIN UNTIL NEW SYSTEM IS INSTALLED AND APPROVED.
4. PROVIDE CONTROL MODULES TO FOR HVAC UNIT SHUT DOWN AS REQUIRED.
5. DEVICES MOUNTED AT BUILDING EXTERIOR SHALL BE INSTALLED IN NEMA 3R, WEATHERPROOF ENCLOSURE(S).
6. ALL FA CONTROL MODULES AND MONITORING MODULES SHALL BE WITHIN 3'-0" FT OF THE DEVICE IT IS CONTROLLING.
7. FIRE ALARM PANELS SHALL BE SEMI-FLUSH MOUNTED.

0 1/2 1
IF THIS BAR DOES NOT MEASURE 1", THEN DRAWING IS NOT TO FULL SCALE

No.	Date	Revisions
0	02-18-25	RFP SET

Drawn by JL
Checked by SH
Project No. 40034G
Scale
Date 02/18/2025

GREENMAN PEDERSEN, INC
2 EXECUTIVE BOULEVARD
SUITE 202
SUFFERN, NY 10901

Mechanical, Electrical & Structural Engineer:

ATZL, NASHER, & ZIGLER
234 North Main Street
New City, NY 10956

Civil Engineer:

RENOVATION OF ROCKLAND GREEN ADMINISTRATIVE HEADQUARTERS AND CONSTRUCTION OF AN IMMERSIVE THEATRE EXPERIENCE

TOWN OF CLARKSTOWN
COUNTY OF ROCKLAND

172 MAIN STREET
NANUET, NY 10954

MICHAEL SHILALE ARCHITECTS, L.L.P.
140 Park Avenue New City, NY 10956 Tel 845-708-9200
www.shilale.com

© COPYRIGHT, MICHAEL SHILALE ARCHITECTS, ALL RIGHTS RESERVED.

Drawing Title
FIRE ALARM SECOND FLOOR - INSTALLATION

Drawing No.
FA102

APPENDIX C-1
SITE DESCRIPTION

172 Main Street in Nanuet, NY (Section-Block-Lot: 64.09-1-64)

The Project is sited at 172 Main Street, an approximately .62 acre parcel at the intersection of Prospect Street and Main Street in the Town of Nanuet. The parcel is bounded by Demarest Ave to the east, Orchard Street to the south. there are commercial spaces lining Main Street to the west. There are also residences adjacent on the east along Demarest Ave and below it along Orchard Street.

The existing building is a two-story office building at almost 8,700 square feet. The main entrance of the building is on the second floor at the same level at the rear parking lot. The first floor has two exits that provide direct access to Main Street. On the second floor, there is a large open office area in the center surrounded by private offices and a small conference room along the perimeter of the building. There are two stairways that lead to the first floor. The first floor consists of two open office areas, a large conference room, some private offices, a break room and the mechanical room. A pair of men's and women's toilets are found on both floors. The first floor has a row of structural columns running down the middle of the building. The site contains a parking lot on the East Side of the building and a driveway connecting Demarest Avenue with Main Street. Cars will be allowed to enter and exit from Demarest. Cars will only be able to exit onto Main Street.

APPENDIX D

PROPOSAL FORMS

PROPOSAL FORM 1
SIGNATURE PAGE

To Rockland Green a/k/a Rockland County Solid Waste Management Authority:

The Proposer, in compliance with your Request for Proposals for the Renovation of Rockland Green Administrative Headquarters and Construction of an Immersive Theatre Experience located 172 Main Street in Nanuet, NY, having examined the Proposal documents and being familiar with all conditions surrounding the project, including the Site, materials, labor and equipment required, hereby proposes to furnish all labor, equipment, materials and supplies necessary to meet the obligations of the Proposal in accordance with the solicitation, within the time and prices set forth therein.

Proposer understands that Rockland Green reserves the right to reject any or all Proposals and to accept any item or items in any one Proposal and to waive any informalities in the RFP process.

Respectfully Submitted:

_____
Name of Proposer

_____
Signature

_____
Printed Name

_____
Date

PROPOSAL FORM 2
ADDENDA ACKNOWLEDGEMENT FORM

The undersigned hereby acknowledges receipt of the following Addenda (if any) to the Request for Proposals for the Renovation of Rockland Green Administrative Headquarters and Construction of an Immersive Theatre Experience located 172 Main Street in Nanuet, NY:

Addendum No.	Dated
_____	_____
_____	_____
_____	_____

Person, firm or corporation making this Proposal:

_____
Proposer

_____
Signature

_____
Name/Title

_____
Date

PROPOSAL FORM 3
QUALIFICATIONS FORM

Contractor and all Subcontractors must complete this Qualifications Form in its entirety. Failure to complete and submit this Qualifications Form may result in the Contractor being deemed non-responsive and, consequently, not eligible to participate further.

A. General Information

1. Company Name: _____

2. Address: _____

3. Telephone: _____

4. Contact Person: _____

   Contact person's contact information:

   Title: _____

   Telephone Number: _____

   Fax Number: _____

   Email address: _____

5. Type of Organization (e.g., a corporation; limited liability company; joint venture; partnership; and individual): _____

6. Name of Parent Company, if any: _____

7. Name of Affiliate Companies, if any: _____

8. Identity of Joint Venture Partners, if any: _____

9. Financial References: _____

10. New York Surety: _____

PROPOSAL FORM 3 (Continued)
QUALIFICATIONS FORM

B. Business Information

1. Brief history of Company (attach additional sheets as necessary):

_____

_____

2. Number of Years in Business: _____Years

3. Annual Value of contracting work (Range): $_____

4. Value of contracts normally accepted: Minimum_____ Maximum _____

5. Current Backlog: _____

6. Number of Employees (Range). _____

7. Type of work (approximate): Industrial _____ % Commercial_____ % Residential_____ %

8. Do you hold a license for the work (as the work requires) † Yes † No † N/A

9. Labor relations: Open Union - If Union, local or national agreement? _____

10. Name and address of all partners, key shareholders, principals and/or owners:

_____

_____

11. Has Company ever failed to complete any contract awarded to it? _____

If so, where and why for each contract not completed on time:

_____

_____

12. Has any officer or partner of Company ever been an officer or partner of some other organization that failed to complete a contract? _____

_____

PROPOSAL FORM 3 (Continued)
QUALIFICATIONS FORM

13. If yes to #12, state name of individual, other organization, reason, and bonding company: _____

_____

14. In what other lines of business is Company directly or indirectly involved? _____

_____

15. With what individual or entities have you been associated as partner or otherwise during the past five (5) years? _____

_____

16. Describe the principal and any secondary nature of your current business: _____

_____

17. State the length of time you have been in that business under your present name and identify all other names under which you have done business: _____

_____

18. Has any individual, partner, shareholder, principal, owner or Affiliate of your firm been the subject of administrative or judicial action for an alleged violation of state or federal laws or regulations? If so state the details and disposition. _____
_____
_____

19. Are you, your partners, joint venturers, parent corporation or subsidiaries a party to any legal actions that may be relevant to your performance of the obligations described in the Proposal? If so, identify these actions: _____
_____

20. Have you, any partner, key shareholder, principal, owner or Affiliate of your firm been the subject of any criminal conviction(s) indictment(s) or investigation(s)? If so, state the details:_____

_____

21. List any and all civil penalties, judgments, consent decrees or other sanctions within the last five (5) years, as a result of a violation of any law, rule, regulation or ordinance in connection with its business activities, by the Company, any Affiliate of the Company, or any key shareholder, officer or director of the Company or any

PROPOSAL FORM 3 (Continued)
QUALIFICATIONS FORM

Affiliate thereof. _____
_____

22. List any and all current investigations, indictments or pending litigation by any Federal, State or local jurisdiction of the Company, any Affiliate of the Company or any key shareholder, officer or director of the Company or any Affiliate thereof.

_____

_____

23. List any and all actions occurring within the last five (5) years which have resulted in revocation or suspension of any permit or authority to do business in any Federal, State or local jurisdiction, by the Company, any Affiliate of the Company, or any key shareholder, officer or director of the Company or any Affiliate thereof.
_____

_____

24. List any and all actions occurring in the past five (5) years that have resulted in the barring from public bidding by the Company, any Affiliate of the Company, or any key shareholder, officer or director of the Company or any Affiliate thereof. _____
_____
_____

25. List any bankruptcy proceedings in the past five (5) years by the Company, any Affiliate of the Company, or any shareholder, officer or director of the Company or any Affiliate thereof.
_____

_____

26. Are there any judgments, claims, arbitration proceedings or suits pending, current, or outstanding against your organization or its officers? † Yes † No

27. Has your organization filed any lawsuits or requested arbitration with regard to construction contracts within the last five years? † Yes † No

C. Safety Information

28. Workers Compensation Employer Modification Rate for current year and three previous years.

_____2025 _____2024 _____ 2023 _____2022

29. If you keep OSHA 300 logs please attach a copy of the three most recent years of OSHA 300 logs.

30. Total Recordable Incident Rate (TRIR Rate) for current year and three previous years.

_____ 2025 _____ 2024 _____ 2023 _____2022

31. Company Safety Contract:_____

32. Has your company been cited with any regulatory (EPA, OSHA, DOH, etc.) citations, violations, or fines within the past three years? (If Yes, then include a copy of the actual citation and provide a detailed explanation of violation with final findings. Attach additional pages as needed.) † Yes † No

33. Do you have a Health & Safety Orientation Program for new hires? † Yes † No

34. Do you hold daily/weekly Health & Safety meetings? † Yes † No

35. Do you have a Substance Abuse and Firearms Policy in effect? † Yes † No

36. If you use a subcontractor are they required to adhere to your company's safety policies and practices?

† Yes † No

37. Does your company meet the Project Insurance Requirements? † Yes † No

If No, then why not?

_____

_____

The undersigned warrants the truth and accuracy of all statements and answers herein contained. Include additional sheets if necessary.

_____ _____
Authorized Signature Date

_____
Name & Title

PROPOSAL FORM 3 (Continued)
QUALIFICATIONS FORM

D. Financial Information (To be signed before a Notary Public)

Attach financial statements, prepared on an accrual basis, in a form which clearly indicates the Company's assets, liabilities and net worth over the most recent three (3) year period or as many years as your firm has been in business if less than three (3) years.

Dates of financial statements: _____

Name(s) of firms(s) preparing statements: _____

Dated this ___ day of _____, 20___

_____
(Print or Type Name of Company)

By:_____

Title:_____

_____ being duly sworn, deposes and says that the financial statement(s) referenced above are a true and accurate statement of Company's financial condition as of the date hereof; and all of the foregoing qualification information is true, complete and accurate.

Sworn to before me this ____ day of _____, _____

_____
Notary Public

PROPOSAL FORM 4
AFFIDAVIT OF NON COLLUSION

NAME OF PROPOSER: _____

BUSINESS ADDRESS: _____

E-MAIL ADDRESS: _____

CERTIFICATION AND SIGNATURE FORM

I hereby attest that I am the person responsible within my firm for the final decision as to the prices(s) and amount of this Proposal or, if not, that I have written authorization, enclosed herewith, from that person to make the statements set out below on his or her behalf and on behalf of my firm.

I further attest that:

1. The price(s) and amount of this proposal have been arrived at independently, without consultation, communication or agreement for the purpose of restricting competition with any other contractor, proposer or potential proposer.
2. Neither the price(s), nor the amount of this proposal, have been disclosed to any other firm or person who is a proposer or potential proposer on this project, and will not be so disclosed prior to proposal opening.
3. No attempt has been made or will be made to solicit, cause or induce any firm or person to refrain from proposing on this project, or to submit a proposal higher than the proposal of this firm, or any intentionally high or non-competitive proposal or other form of complementary proposal.
4. The proposal of my firm is made in good faith and not pursuant to any agreement or discussion with, or inducement from any firm or person to submit a complementary proposal.
5. My firm has not offered or entered into a subcontract or agreement regarding the purchase of materials or services from any other firm or person, or offered, promised or paid cash or anything of value to any firm or person, whether in connection with this or any other project, in consideration for an agreement or promise by any firm or person to refrain from proposing or to submit a complementary proposal on this project.
6. My firm has not accepted or been promised any subcontract or agreement regarding the sale of materials or services to any firm or person, and has not been promised or paid cash or anything of value by any firm or person, whether in connection with this or any project, in consideration for my firm's submitting a complementary proposal, or agreeing to do so, on this project.
7. I have made a diligent inquiry of all members, officers, employees, and agents of my firm with responsibilities relating to the preparation, approval or submission of my firm's proposal on this project and have been advised by each of them that he or she has not participated in any communication, consultation, discussion, agreement, collusion, act or other conduct inconsistent with any of the statements and representations made in this affidavit.

The person signing this proposal, under the penalties of perjury, affirms the truth thereof.

_____
Signature

_____
Name & Company Position

_____
Company Name

_____
Date Signed

SWORN TO BEFORE ME THIS

_____ DAY OF _____ 20___

_____
NOTARY PUBLIC

PROPOSAL FORM 5
DISCLOSURE AFFIDAVIT

(Proposer must sign this form before a Notary Public)

STATE OF NEW YORK)
) ss
COUNTY OF _____)

I, _____Design_____, _____
(NAME) (TITLE - Officer, Partner or Principal)

being duly sworn depose and swear under the penalties of perjury:

1. That, in connection with the Proposal in response to the Request for Proposals Renovation of Rockland Green Administrative Headquarters and Construction of an Immersive Theatre Experience located at 172 Main Street in Nanuet, NY no other person will have any direct or indirect interest in this Proposal except:

   _____
   (In case of corporations, all officers of the corporation and stockholders owning more than 5% of the corporation stock must be listed. Use attached sheet if necessary.)

2. That _____ related to any officer
   (I am not) (none of the officers or stockholders are)

   or employee of Rockland Green except_____

   _____

3. There is not any State or local officer or employee or a member of Rockland Green interested in such application.

_____
Signature, Name and Title

Sworn to before me this _____ day of _____, _____

_____
Notary Public

PROPOSAL FORM 6
AFFIRMATIVE ACTION PLAN

STATE OF NEW YORK)

) ss:

COUNTY OF ROCKLAND)

_____ being duly sworn, deposes and says that he/she is the _____ of the _____ corporation. That *I do [do not] employ fifteen (15) employees and *I do [do not do] a minimum of $50,000 per annum business with the Rockland County Solid Waste Management Authority a/k/a Rockland Green.

Based on the above information (*check one, and provide Plan if required*):

[ ] attached hereto is an Affirmative Action Plan, or

[ ] because of the above, no Affirmative Action Plan is necessary.

_____
(SIGNATURE, NAME AND TITLE)

Sworn to before me this _____ day of _____, ____.

Notary Public, _____ County

* strike out non-applicable information.

PROPOSAL FORM 7
EXCEPTIONS TAKEN TO THIS REQUEST FOR PROPOSALS AND CONTRACT

Exceptions taken to the Request for Proposals

_____ No exceptions taken.

_____ Exceptions taken.

Please provide a mark-up of the relevant language of the RFP where exceptions have been taken.

Exceptions and/or Mark-ups to the Contract

_____ No exceptions taken.

_____ Exceptions taken and/or mark-ups made.

Please provide a mark-up of the relevant language of the contract where exceptions have been taken.

_____
Proposer

_____
Signature

_____
Name/Title

_____
Date

PROPOSAL FORM 8
CONSENT OF SURETY
FOR
PERFORMANCE BOND AND LABOR AND MATERIALS PAYMENT BOND

Mr. Gerard Damiani Jr.
Executive Director
Rockland Green
172 Main Street
Nanuet, NY 10954

Dear Mr. Damiani:

_____ (the "Proposer") has submitted herewith a Proposal in response to the Request for Proposals Renovation of Rockland Green Administrative Headquarters and Construction of an Immersive Theatre Experience located 172 Main Street in Nanuet, NY (RFP 2025-02) (the "RFP"). The RFP requires the selected Proposer to enter into an agreement to transform the existing office building located at 172 Main Street in Nanuet, NY into the Rockland Green Administrative Headquarters (the "Contract").

The Surety has reviewed the Proposer's Proposal which will form the basis of the Contract. The Surety hereby certifies that it intends to issue on behalf of the Proposer, as security under the Contract, (1) a Performance Bond, and (2) a Labor and Materials Payment Bond for the benefit of Proposer, with Rockland Green as co-beneficiary, in the event the Proposer is selected for final negotiations and execution of the Contract, in the forms set forth in the RFP at Appendix I.

_____
Name of Surety

_____
Name and Title of Authorized Signatory

_____
Signature

PROPOSAL FORM 9
FOIL ACKNOWLEDGEMENT FORM

The Proposer hereby acknowledges and recognizes that the New York State Freedom of Information Law, Public Officers Law, Article 6, Section 84-90 provides for public access to government records. However, Proposals may contain trade secrets and other technical, financial, or administrative data whose public disclosure could cause substantial injury to the Proposer's competitive position.

Please indicate whether your Proposal contains trade secrets and other technical, financial or administrative data whose public disclosure could cause substantial injury to your competitive position by marking the applicable below.

_____ The Proposal DOES contain trade secrets and other technical, financial or administrative data whose public disclosure could cause substantial injury to our competitive position, and we have clearly marked pages in our Proposal containing such information.

_____ The Proposal DOES NOT contain trade secrets and other technical, financial or administrative data whose public disclosure could cause substantial injury to your competitive position.

Person, firm or corporation making this Proposal:

_____
Proposer

_____
Signature

_____
Name/Title

_____
Date

PROPOSAL FORM 10
STATEMENT OF PREVAILING WAGE LAW VIOLATIONS

Please indicate below whether the Proposer has ever been investigated for and/or found to be in violation of the Prevailing Wage Law in New York State or any similar law in any other jurisdiction:

No: _____

Yes: _____

If you marked "Yes", please provide the following information for **each** notice of violation received in connection with the payment of prevailing wages (whether such event occurred within the State or any other jurisdiction):

1. Date of Notice of Violation: _____

2. Location/Jurisdiction of Violation: _____

3. Description of Violation: _____

_____

_____

4. Disposition of Violation (include relevant dates): _____

_____

_____

5. Additional Comments: _____

_____

_____

To the extent additional space is required, Proposers may attach additional pages.

PROPOSAL FORM 11
CERTIFICATION OF SITE CONDITIONS

By submission of this Proposal in response to the Request for Proposals Renovation of Rockland Green Administrative Headquarters and Construction of an Immersive Theatre Experience located 172 Main Street in Nanuet, NY, the undersigned hereby accepts and acknowledges that it has reviewed the Site description included in Appendix C-1 to the RFP, and is familiar with the Site, its limits and constraints. The undersigned hereby agrees to waive all claims based on ignorance or misunderstanding of the Site's conditions that exist or difficulties that may be encountered in the execution of the services under the Contract as a result of failure to make the necessary examinations and inspections, nor will the same be accepted as a basis for any claims whatsoever for extra compensation.

Signature of person duly authorized to submit on behalf of the Proposer.

_____
Proposer

_____
Signature

_____
Name/Title

_____
Date

PROPOSAL FORM 12
INSURANCE LETTER OF INTENT

Mr. Gerard Damiani Jr.
Executive Director
Rockland Green
172 Main Street
Nanuet, NY 10954

Dear Mr. Damiani:

_____ (the "Proposer") has submitted herewith a Proposal in response to the Request for Proposals Renovation of Rockland Green Administrative Headquarters and Construction of an Immersive Theatre Experience located at 172 Main Street in Nanuet, NY (RFP 2025-02) (the "RFP"). The RFP requires the selected Proposer to enter into an agreement to renovate the existing Administrative Headquarters located at 172 Main Street in Nanuet, NY into a state of the art Rockland Green Administrative Headquarters and Immersive Theater Experience (the "Contract").

The Insurance Company has reviewed the Proposer's Proposal which will form the basis of the Contract. The Insurance Company hereby certifies that it intends to provide all Required Insurance set forth in the RFP in the event the Proposer is selected for final negotiations and execution of the Contract.

_____
Name of Insurance Company

_____
Name and Title of Authorized Signatory

_____
Signature

PROPOSAL FORM 13
PAST AND PRESENT PERFORMANCE INFORMATION FORM
***Include information for a minimum of (5) five references**

NAME OF CONTRACTOR/SUBCONTRACTOR: _____

Provide the information requested on this form for each contract/program being described as a reference. Provide frank, concise comments regarding your performance on the contracts you identify. Provide a separate completed form for each contract/program submitted. Limit the number of past efforts submitted and the length of each submission to the limitations, if any, set forth in specifications.

Name of Contracting Entity: _____

Contract Name/Title:_____

Term of Contract: _____

Original Contract Value: _____

Current or Final Contract Value: _____

Original Completion Date: _____

Current or Final Completion Date: _____

A. Brief Description of the project or work performed. Identify whether you were a Prime or Subcontractor.

_____
_____
_____
_____
_____

B. Number of Change Orders (if any): _____

Primary Causes or Reasons of Change:

_____
_____
_____

C. Primary Point of Contact:

NOTE: CONFIRM CONTACT INFORMATION PROVIDED IS CURRENT PRIOR TO SUBMISSION.

Name:_____

Address:_____

Telephone:_____

E-mail: _____

If subcontractors were used, identify the names of the subcontractors and the percentage of the contract the subcontractor was responsible for.

_____

PROPOSAL FORM 14

ACKNOWLEDGMENT REGARDING DRAWINGS AND SPECIFICATIONS

The undersigned hereby acknowledges an understanding of and ability to comply with, at a minimum, the Specifications set forth in Appendix B and the Drawings set forth in Appendix C to the Request for Proposals Renovation of Rockland Green Administrative Headquarters and Construction of an Immersive Theatre Experience located 172 Main Street in Nanuet, NY:

Person, firm or corporation making this Proposal:

_____
Proposer

_____
Signature

_____
Name/Title

_____
Date

PROPOSAL FORM 15

PROPOSED ALTERATIONS

Please indicate below whether the Proposer's Proposal includes additional Proposed Alterations:

No: _____

Yes: _____

As set forth in Section VIII(b)(i)(c) of the RFP, any such Proposed Alterations must be accompanied by revised Drawings and Specifications, as well as a detailed explanation as to how any such Proposed Alterations would:

(i) impact the cost to construct the Project;
(ii) impact the cost to operate or maintain the Rockland Green Administrative Headquarters over time,
(iii) improve the function of the Rockland Green Administrative Headquarters;
(iv) add value for Rockland Green, the employees who will work at the Rockland Green Administrative Headquarters; and/or
(v) shorten the construction time period (without jeopardizing the quality of the design).

Proposers must also include the cost or savings associated with such Proposed Alterations in the appropriate section of Proposal Form 16.

Proposer acknowledges that Rockland Green will consider any such Proposed Alterations during its evaluation of the Proposals received in response to this RFP; however, a Proposer's decision not to submit Proposed Alterations will not negatively impact Rockland Green's evaluation of that Proposal. Rockland Green is not obligated to accept or reject any such Proposed Alterations, but rather Rockland Green may discuss and negotiate them with the Proposer(s) who submit them, and may elect to implement any one or more or none of them, and if so, will include them in the scope of Work under the Contract.

Person, firm or corporation making this Proposal:

_____
Proposer

_____
Signature

_____
Name/Title

_____
Date

PROPOSAL FORM 16
CONTRACT PRICE PROPOSAL FORM

Proposers must provide a proposed cost for each line under each subgroup. As well as the total proposed Contract Price on this forms.

Subgroup	Proposed Cost
Division 01 – General Requirements	
Alternate No. 1	
Alternate No. 2	
Alternate No. 3	
Alternate No. 4	
Unit Price No. 1	
Unit Price No. 2	
Unit Price No. 3	
Allowance No. 1	
Allowance No. 2	
Allowance No. 3	
Allowance No. 4	$515,000
Division 02 – Existing Conditions	
Division 03 – Concrete	
Division 04 - Masonry	
Division 05 – Metals	
Division 06 – Wood, Plastics and Composites	
Division 07 – Thermal and Moisture Protection	
Division 08 – Openings	
Division 09 – Finishes	
Division 10 – Specialties	
Division 11 – Equipment	
Division 14 – Conveying Equipment	
Division 21 – Fire Suppression	
Division 22 – Plumbing	
Division 23 – HVAC	
Division 26 – Electrical	
Division 27 – Communications	
Division 31 – Earthwork	
Division 32 – Exterior Improvements	
Division 33 – Utilities	
Division 48 – Electrical Power Generation	
Site Mobilization	
Insurance	
Overhead and Profit	

Total proposed Contract Price	
In words	

PRICE PROPOSAL FORM 16 (*contd.*)

VOLUNTARY ALTERNATE PRICING FOR PROPOSED ALTERATIONS

Proposers are encouraged (but not required) to offer Proposed Alterations for Rockland Green's consideration, as discussed in the RFP.

The selected Contractor will be paid a fixed Contract Price for all of the Work, which will include any Proposed Alterations that are selected by Rockland Green.

Include the cost or savings associated with any such Proposed Alterations below:

Voluntary Alternate Pricing: [+/- $] In words:
Total proposed Contract Price for all Work, including Proposed Alterations: [$] In words:

APPENDIX E

REQUIRED INSURANCE

Prior to the Contract commencement and throughout the term of the Contract, the Contractor shall maintain insurance issued by an insurance carrier satisfactory to Rockland Green to protect the parties hereto from and against any and all claims, demands, actions, judgments, costs, expenses and liabilities of every kind and nature which may arise or result, directly or indirectly, from or by reason of such loss, injury, including injury to the applicable Contractor's employees or employees of such Contractor's Subcontractors, or damage. Such insurance shall be maintained at the Contractor's sole expense.

The Contractor shall obtain and maintain throughout the term of the Contract the following types and minimum amounts, not including deductible, of insurance:

- Commercial general liability and property damage insurance with broad form blanket contractual liability and products and completed operations coverage, shall be not less than $1,000,000 per occurrence and $2,000,000 general aggregate
    - Prohibited exclusion(s), including but not limited to (1) 'gravity related' injuries; (2) injuries sustained by an employee of an/any insured; (3) liability assumed by contract (4) height limitation or (5) territory restriction; and
    - Insurance must apply on a Per-Project basis; and
    - No Labor Law or Third-Party Action Over Exclusions;
- Commercial comprehensive automobile liability endorsed for any automobile (owned and non-owned) with minimum limits for combined property damage and bodily injury of $1,000,000 per occurrence
- Worker's compensation coverage in the statutory amounts required by New York State Law;
- Employer's liability insurance required by New York State law covering all of the employees of the Contractor at Rockland Green 's facility;
- Excess liability above the commercial general liability and automobile liability shall not be less than $10,000,000 per occurrence and $10,000,000 general aggregate, the Umbrella must be excess over the General Liability, Automobile Liability and Employers Liability and
- Pollution liability, if applicable, shall not be less than $5,000,000.
- Professional liability, if applicable, shall not be less than $5,000,000.

1. The commercial general liability, excess liability, professional liability, and pollution liability shall be kept in force for a period of one (1) year following the end of the contract period.

2. Additional Insureds. The Contractor will name Rockland Green, the County, and their officers, agents, employees, and consultants as additional named insureds on a primary, non-contributory basis (the "Additional Insureds") for Ongoing and Completed Operations on all insurance policies required herein, other than workers' compensation and employer liability coverage. Such coverage must be provided using the 04/13 versions of ISO Form CG 20 10 and CG 20 37 or equivalent. The Contractor will waive the subrogation rights of its various insurance carriers in favor of Rockland Green via CG 20 04 or equivalent.

3. Insurance Certificates and Policies. Insurance and any renewals thereof will be evidenced by certificates of insurance (the "Certificates") and copies of all insurance policies and endorsements issued or countersigned by a duly authorized representative of the issuer and delivered to Rockland Green for its approval thirty (30) days prior to the Contract commencement. The Certificates will require thirty (30) days written notice to Rockland Green, of cancellation, intent not to renew, or reduction in its coverage by the insurance company for all policies.

4. Non-Recourse Provision. All insurance policies will provide that the insurers will have no recourse against the Additional Insureds for payment of any premium or assessment and will contain a severability of interest provision in regard to mutual coverage liability policies. The coverages will be the primary source of any restitution or other recovery for any injuries to, or death of persons, or loss or damage to property incurred as a result of an action or inaction of the Contractor or its Subcontractors, of their respective suppliers, employees, agents, representatives, or invitees, that fall within these coverages and also within the coverages of any liability insurance or self-insurance program maintained by Rockland Green.

5. Deductibles. Deductibles shall not exceed $10,000.

6. Subcontractors. The Contractor will be responsible for ensuring that all Subcontractors which are working at the Site secure and maintain all insurance coverages hereunder and other financial sureties required by Applicable Law in connection with their presence and the performance of their duties at or concerning the Work. The Contractor will furnish Rockland Green with Subcontractors' Certificates and policies for review and approval prior to beginning.

7. Specific Provisions for Comprehensive General Liability Insurance. Comprehensive General Liability insurance, as required hereunder, will include premises-operations, blanket contractual, products and completed operations, personal injury, host liquor liability, explosion, collapse, underground hazards, and broad form property damage, including completed operations and independent contractor's coverages.

8. Specific Provisions for Worker's Compensation Coverage. Worker's Compensation insurance must be in accordance with the requirements of New York law, as amended from time to time. The required worker's compensation insurance will include other states' coverage, voluntary compensation coverage, and federal longshoreman and harbor worker's coverage.

9. Changes in Insurance Coverage. The insurance listed herein are the minimum coverages permitted, except that Rockland Green may decrease or omit the coverages specified at any time in its sole discretion. If Rockland Green decreases such coverage, any cost savings will be credited to the benefit of Rockland Green.

10. Qualifications of Insurers. The Contractor is required to obtain the insurance set forth in this Appendix with insurance companies that carry a Best's "A" or equivalent rating. In addition, insurance must be obtained and maintained with insurers authorized to do business in the State of New York.

11. Subcontractor Indemnification. The Contractor shall include the following language in all Subcontracts.

> To the fullest extent permitted by law, the Subcontractor agrees to indemnify, defend and hold harmless the Contractor as well as all parties listed below as additional insureds, their officers, directors, agents, employees and partners (hereafter collectively "Indemnitees") from any and all claims, suits, damages, liabilities, professional fees, including attorneys' fees, costs, court costs, expenses and disbursements related to death, personal injuries or property damage (including loss of use thereof brought against any of the Indemnitees by any person or entity, arising out of or in connection with or as a result or consequence of the performance of the Work of the Subcontractor, as well as any additional work, extra work or add-on work, whether or not caused in whole or in part by the Subcontractor or any person or entity employed, either directly or indirectly by the Subcontractor including any subcontractors thereof and their employees. The parties expressly agree that this indemnification agreement contemplates 1) full indemnity in the event of liability imposed against the Indemnitees without negligence; and 2) partial indemnity in the event of any actual negligence on the part of the Indemnitees either causing or contributing to the underlying claim which negligence is expressly excepted from the Subcontractor's obligation to indemnify. Attorneys' fees, court costs, expenses and disbursements shall be defined without limit to include those fees, costs, etc. incurred in

defending the underlying claim and those fees, costs, etc. incurred in connection with the enforcement of this Subcontract Agreement. Indemnification under this Agreement shall operate whether or not Contractor has placed and maintained the insurance required under this agreement. The Subcontractor shall cause all subcontract agreements it enters into to include this indemnification clause so as to ensure that Contractor and all Indemnitees hereunder shall have the same protection from sub-subcontractors as is afforded by the Subcontractor.

APPENDIX F

PREVAILING WAGE RATES

Kathy Hochul, Governor

Roberta Reardon, Commissioner

Rockland Green

Ryan Montal, Assistant to the Director
172 Main Street
Nanuet NY 10954

Schedule Year	2024 through 2025
Date Requested	02/11/2025
PRC#	2025001755

Location	172 Main St
Project ID#	RFP-2025-02
Project Type	Renovation of Rockland Green Administrative Headquarters and Construction of an Immersive Theater Experience.

PREVAILING WAGE SCHEDULE FOR ARTICLE 8 PUBLIC WORK PROJECT

Attached is the current schedule(s) of the prevailing wage rates and prevailing hourly supplements for the project referenced above. A unique Prevailing Rate Case Number (PRC#) has been assigned to the schedule(s) for your project.

The schedule is effective from July 2024 through June 2025. All updates, corrections, posted on the 1st business day of each month, and future copies of the annual determination are available on the Department's website www.labor.ny.gov. Updated PDF copies of your schedule can be accessed by entering your assigned PRC# at the proper location on the website.

It is the responsibility of the contracting agency or its agent to annex and make part, the attached schedule, to the specifications for this project, when it is advertised for bids and /or to forward said schedules to the successful bidder(s), immediately upon receipt, in order to insure the proper payment of wages.

Please refer to the "General Provisions of Laws Covering Workers on Public Work Contracts" provided with this schedule, for the specific details relating to other responsibilities of the Department of Jurisdiction.

Upon completion or cancellation of this project, enter the required information and mail **OR** fax this form to the office shown at the bottom of this notice, **OR** fill out the electronic version via the NYSDOL website.

NOTICE OF COMPLETION / CANCELLATION OF PROJECT

Date Completed: _____ Date Cancelled: _____

Name & Title of Representative: _____

Phone: (518) 457-5589 Fax: (518) 485-1870
W. Averell Harriman State Office Campus, Bldg. 12, Room 130, Albany, NY 12240

General Provisions of Laws Covering Workers on Article 8 Public Work Contracts

Introduction

The Labor Law requires public work contractors and subcontractors to pay laborers, workers, or mechanics employed in the performance of a public work contract not less than the prevailing rate of wage and supplements (fringe benefits) in the locality where the work is performed.

Responsibilities of the Department of Jurisdiction

A Department of Jurisdiction (Contracting Agency) includes a state department, agency, board or commission: a county, city, town or village; a school district, board of education or board of cooperative educational services; a sewer, water, fire, improvement and other district corporation; a public benefit corporation; and a public authority awarding a public work contract.

The Department of Jurisdiction (Contracting Agency) awarding a public work contract MUST obtain a Prevailing Rate Schedule listing the hourly rates of wages and supplements due the workers to be employed on a public work project. This schedule may be obtained by completing and forwarding a "Request for wage and Supplement Information" form (PW 39) to the Bureau of Public Work. The Prevailing Rate Schedule MUST be included in the specifications for the contract to be awarded and is deemed part of the public work contract.

Upon the awarding of the contract, the law requires that the Department of Jurisdiction (Contracting Agency) furnish the following information to the Bureau: the name and address of the contractor, the date the contract was let and the approximate dollar value of the contract. To facilitate compliance with this provision of the Labor Law, a copy of the Department's "Notice of Contract Award" form (PW 16) is provided with the original Prevailing Rate Schedule.

The Department of Jurisdiction (Contracting Agency) is required to notify the Bureau of the completion or cancellation of any public work project. The Department's PW 200 form is provided for that purpose.

Both the PW 16 and PW 200 forms are available for completion online.

Hours

No laborer, worker, or mechanic in the employ of a contractor or subcontractor engaged in the performance of any public work project shall be permitted to work more than eight hours in any day or more than five days in any week, except in cases of extraordinary emergency. The contractor and the Department of Jurisdiction (Contracting Agency) may apply to the Bureau of Public Work for a dispensation permitting workers to work additional hours or days per week on a particular public work project.

Wages and Supplements

The wages and supplements to be paid and/or provided to laborers, workers, and mechanics employed on a public work project shall be not less than those listed in the current Prevailing Rate Schedule for the locality where the work is performed. If a prime contractor on a public work project has not been provided with a Prevailing Rate Schedule, the contractor must notify the Department of Jurisdiction (Contracting Agency) who in turn must request an original Prevailing Rate Schedule form the Bureau of Public Work. Requests may be submitted by: mail to NYSDOL, Bureau of Public Work, State Office Bldg. Campus, Bldg. 12, Rm. 130, Albany, NY 12226; Fax to Bureau of Public Work (518) 485-1870; or electronically at the NYSDOL website www.labor.ny.gov.

Upon receiving the original schedule, the Department of Jurisdiction (Contracting Agency) is REQUIRED to provide complete copies to all prime contractors who in turn MUST, by law, provide copies of all applicable county schedules to each subcontractor and obtain from each subcontractor, an affidavit certifying such schedules were received. If the original schedule expired, the contractor may obtain a copy of the new annual determination from the NYSDOL website www.labor.ny.gov.

The Commissioner of Labor makes an annual determination of the prevailing rates. This determination is in effect from July 1st through June 30th of the following year. The annual determination is available on the NYSDOL website www.labor.ny.gov.

Payrolls and Payroll Records

Every contractor and subcontractor MUST keep original payrolls or transcripts subscribed and affirmed as true under penalty of perjury. As per Article 6 of the Labor law, contractors and subcontractors are required to establish, maintain, and preserve for not less than six (6) years, contemperaneous, true, and accurate payroll records. At a minimum, payrolls must show the following information for each person employed on a public work project: Name, Address, Last 4 Digits of Social Security Number, Classification(s) in which the worker was employed, Hourly wage rate(s) paid, Supplements paid or provided, and Daily and weekly number of hours worked in each classification.

The filing of payrolls to the Department of Jurisdiction is a condition of payment.Every contractor and subcontractor shall submit to the Department of Jurisdiction (Contracting Agency), within thirty (30) days after issuance of its first payroll and every thirty (30) days thereafter, a transcript of the original payrolls, subscribed and affirmed as true under penalty of perjury. The Department of Jurisdiction (Contracting Agency) shall collect, review for facial validity, and maintain such payrolls.

In addition, the Commissioner of Labor may require contractors to furnish, with ten (10) days of a request, payroll records sworn to as their validity and accuracy for public work and private work. Payroll records include, but are not limited to time cards, work description sheets, proof that supplements were provided, cancelled payroll checks and payrolls. Failure to provide the requested information within the allotted ten (10) days will result in the withholding of up to 25% of the contract, not to exceed $100,000.00. If the contractor or subcontractor does not maintain a place of business in New York State and the amount of the contract exceeds $25,000.00, payroll records and certifications must be kept on the project worksite.

The prime contractor is responsible for any underpayments of prevailing wages or supplements by any subcontractor.

All contractors or their subcontractors shall provide to their subcontractors a copy of the Prevailing Rate Schedule specified in the public work contract as well as any subsequently issued schedules. A failure to provide these schedules by a contractor or subcontractor is a violation of Article 8, Section 220-a of the Labor Law.

All subcontractors engaged by a public work project contractor or its subcontractor, upon receipt of the original schedule and any subsequently issued schedules, shall provide to such contractor a verified statement attesting that the subcontractor has received the Prevailing Rate Schedule and will pay or provide the applicable rates of wages and supplements specified therein. (See NYS Labor Laws, Article 8 . Section 220-a).

Determination of Prevailing Wage and Supplement Rate Updates Applicable to All Counties

The wages and supplements contained in the annual determination become effective July 1st whether or not the new determination has been received by a given contractor. Care should be taken to review the rates for obvious errors. Any corrections should be brought to the Department's attention immediately. It is the responsibility of the public work contractor to use the proper rates. If there is a question on the proper classification to be used, please call the district office located nearest the project. Any errors in the annual determination will be corrected and posted to the NYSDOL website on the first business day of each month. Contractors are responsible for paying these updated rates as well, retroactive to July 1st.

When you review the schedule for a particular occupation, your attention should be directed to the dates above the column of rates. These are the dates for which a given set of rates is effective. To the extent possible, the Department posts rates in its possession that cover periods of time beyond the July 1st to June 30th time frame covered by a particular annual determination. Rates that extend beyond that instant time period are informational ONLY and may be updated in future annual determinations that actually cover the then appropriate July 1st to June 30th time period.

Withholding of Payments

When a complaint is filed with the Commissioner of Labor alleging the failure of a contractor or subcontractor to pay or provide the prevailing wages or supplements, or when the Commissioner of Labor believes that unpaid wages or supplements may be due, payments on the public work contract shall be withheld from the prime contractor in a sufficient amount to satisfy the alleged unpaid wages and supplements, including interest and civil penalty, pending a final determination.

When the Bureau of Public Work finds that a contractor or subcontractor on a public work project failed to pay or provide the requisite prevailing wages or supplements, the Bureau is authorized by Sections 220-b and 235.2 of the Labor Law to so notify the financial officer of the Department of Jurisdiction (Contracting Agency) that awarded the public work contract. Such officer MUST then withhold or cause to be withheld from any payment due the prime contractor on account of such contract the amount indicated by the Bureau as sufficient to satisfy the unpaid wages and supplements, including interest and any civil penalty that may be assessed by the Commissioner of Labor. The withholding continues until there is a final determination of the underpayment by the Commissioner of Labor or by the court in the event a legal proceeding is instituted for review of the determination of the Commissioner of Labor.

The Department of Jurisdiction (Contracting Agency) shall comply with this order of the Commissioner of Labor or of the court with respect to the release of the funds so withheld.

Summary of Notice Posting Requirements

The current Prevailing Rate Schedule must be posted in a prominent and accessible place on the site of the public work project. The prevailing wage schedule must be encased in, or constructed of, materials capable of withstanding adverse weather conditions and be titled "PREVAILING RATE OF WAGES" in letters no smaller than two (2) inches by two (2) inches.

The "Public Work Project" notice must be posted at the beginning of the performance of every public work contract, on each job site.

Every employer providing workers. compensation insurance and disability benefits must post notices of such coverage in the format prescribed by the Workers. Compensation Board in a conspicuous place on the jobsite.

Every employer subject to the NYS Human Rights Law must conspicuously post at its offices, places of employment, or employment training centers, notices furnished by the State Division of Human Rights.

Employers liable for contributions under the Unemployment Insurance Law must conspicuously post on the jobsite notices furnished by the NYS Department of Labor.

Apprentices

Employees cannot be paid apprentice rates unless they are individually registered in a program registered with the NYS Commissioner of Labor. The allowable ratio of apprentices to journeyworkers in any craft classification can be no greater than the statewide building trade ratios promulgated by the Department of Labor and included with the Prevailing Rate Schedule. An employee listed on a payroll as an apprentice who is not registered as above or is performing work outside the classification of work for which the apprentice is indentured, must be paid the prevailing journeyworker's wage rate for the classification of work the employee is actually performing.

NYSDOL Labor Law, Article 8, Section 220-3, require that only apprentices individually registered with the NYS Department of Labor may be paid apprenticeship rates on a public work project. No other Federal or State Agency of office registers apprentices in New York State.

Persons wishing to verify the apprentice registration of any person must do so in writing by mail, to the NYSDOL Office of Employability Development / Apprenticeship Training, State Office Bldg. Campus, Bldg. 12, Albany, NY 12226 or by Fax to NYSDOL Apprenticeship Training (518) 457-7154. All requests for verification must include the name and social security number of the person for whom the information is requested.

The only conclusive proof of individual apprentice registration is written verification from the NYSDOL Apprenticeship Training Albany Central office. Neither Federal nor State Apprenticeship Training offices outside of Albany can provide conclusive registration information.

It should be noted that the existence of a registered apprenticeship program is not conclusive proof that any person is registered in that program. Furthermore, the existence or possession of wallet cards, identification cards, or copies of state forms is not conclusive proof of the registration of any person as an apprentice.

Interest and Penalties

In the event that an underpayment of wages and/or supplements is found:

- Interest shall be assessed at the rate then in effect as prescribed by the Superintendent of Banks pursuant to section 14-a of the Banking Law, per annum from the date of underpayment to the date restitution is made.
- A Civil Penalty may also be assessed, not to exceed 25% of the total of wages, supplements, and interest due.

Debarment

Any contractor or subcontractor and/or its successor shall be ineligible to submit a bid on or be awarded any public work contract or subcontract with any state, municipal corporation or public body for a period of five (5) years when:

- Two (2) willful determinations have been rendered against that contractor or subcontractor and/or its successor within any consecutive six (6) year period.
- There is any willful determination that involves the falsification of payroll records or the kickback of wages or supplements.

Criminal Sanctions

Willful violations of the Prevailing Wage Law (Article 8 of the Labor Law) may be a felony punishable by fine or imprisonment of up to 15 years, or both.

Discrimination

No employee or applicant for employment may be discriminated against on account of age, race, creed, color, national origin, sex, disability or marital status.

No contractor, subcontractor nor any person acting on its behalf, shall by reason of race, creed, color, disability, sex or national origin discriminate against any citizen of the State of New York who is qualified and available to perform the work to which the employment relates (NYS Labor Law, Article 8, Section 220-e(a)).

No contractor, subcontractor, nor any person acting on its behalf, shall in any manner, discriminate against or intimidate any employee on account of race, creed, color, disability, sex, or national origin (NYS Labor Law, Article 8, Section 220-e(b)).

The Human Rights Law also prohibits discrimination in employment because of age, marital status, or religion.

There may be deducted from the amount payable to the contractor under the contract a penalty of $50.00 for each calendar day during which such person was discriminated against or intimidated in violation of the provision of the contract (NYS Labor Law, Article 8, Section 220-e(c)).

The contract may be cancelled or terminated by the State or municipality. All monies due or to become due thereunder may be forfeited for a second or any subsequent violation of the terms or conditions of the anti-discrimination sections of the contract (NYS Labor Law, Article 8, Section 220-e(d)).

Every employer subject to the New York State Human Rights Law must conspicuously post at its offices, places of employment, or employment training centers notices furnished by the State Division of Human Rights.

Workers' Compensation

In accordance with Section 142 of the State Finance Law, the contractor shall maintain coverage during the life of the contract for the benefit of such employees as required by the provisions of the New York State Workers' Compensation Law.

A contractor who is awarded a public work contract must provide proof of workers' compensation coverage prior to being allowed to begin work.

The insurance policy must be issued by a company authorized to provide workers' compensation coverage in New York State. Proof of coverage must be on form C-105.2 (Certificate of Workers' Compensation Insurance) and must name this agency as a certificate holder.

If New York State coverage is added to an existing out-of-state policy, it can only be added to a policy from a company authorized to write workers' compensation coverage in this state. The coverage must be listed under item 3A of the information page.

The contractor must maintain proof that subcontractors doing work covered under this contract secured and maintained a workers' compensation policy for all employees working in New York State.

Every employer providing worker's compensation insurance and disability benefits must post notices of such coverage in the format prescribed by the Workers' Compensation Board in a conspicuous place on the jobsite.

Unemployment Insurance

Employers liable for contributions under the Unemployment Insurance Law must conspicuously post on the jobsite notices furnished by the New York State Department of Labor.

Kathy Hochul, Governor

Roberta Reardon, Commissioner

Rockland Green

Ryan Montal, Assistant to the Director
172 Main Street
Nanuet NY 10954

Schedule Year	2024 through 2025
Date Requested	02/11/2025
PRC#	2025001755

Location	172 Main St
Project ID#	RFP-2025-02
Project Type	Renovation of Rockland Green Administrative Headquarters and Construction of an Immersive Theater Experience.

Notice of Contract Award

New York State Labor Law, Article 8, Section 220.3a requires that certain information regarding the awarding of public work contracts, be furnished to the Commissioner of Labor. One "Notice of Contract Award" (PW 16, which may be photocopied), **MUST** be completed for **EACH** prime contractor on the above referenced project.

Upon notifying the successful bidder(s) of this contract, enter the required information and mail **OR** fax this form to the office shown at the bottom of this notice, **OR** fill out the electronic version via the NYSDOL website.

Contractor Information

All information must be supplied

Federal Employer Identification Number: _____

Name: _____

Address: _____

_____

City: _____ State: _____ Zip: _____

Amount of Contract: $_____

Approximate Starting Date: ____/____/____

Approximate Completion Date: ____/____/____

Contract Type:

[ ] (01) General Construction
[ ] (02) Heating/Ventilation
[ ] (03) Electrical
[ ] (04) Plumbing
[ ] (05) Other : _____

Phone: (518) 457-5589 Fax: (518) 485-1870
W. Averell Harriman State Office Campus, Bldg. 12, Room 130, Albany, NY 12226

Social Security Numbers on Certified Payrolls:

The Department of Labor is cognizant of the concerns of the potential for misuse or inadvertent disclosure of social security numbers. Identity theft is a growing problem and we are sympathetic to contractors' concern regarding inclusion of this information on payrolls if another identifier will suffice.

For these reasons, the substitution of the use of the last four digits of the social security number on certified payrolls submitted to contracting agencies on public work projects is now acceptable to the Department of Labor. This change does not affect the Department's ability to request and receive the entire social security number from employers during its public work/ prevailing wage investigations.

Construction Industry Fair Play Act: Required Posting for Labor Law Article 25-B § 861-d

Construction industry employers must post the "Construction Industry Fair Play Act" notice in a prominent and accessible place on the job site. Failure to post the notice can result in penalties of up to $1,500 for a first offense and up to $5,000 for a second offense. The posting is included as part of this wage schedule. Additional copies may be obtained from the NYS DOL website, https://dol.ny.gov/public-work-and-prevailing-wage
If you have any questions concerning the Fair Play Act, please call the State Labor Department toll-free at 1-866-435-1499 or email us at: dol.misclassified@labor.ny.gov .

Worker Notification: (Labor Law §220, paragraph a of subdivision 3-a)

Effective June 23, 2020

This provision is an addition to the existing wage rate law, Labor Law §220, paragraph a of subdivision 3-a. It requires contractors and subcontractors to provide written notice to all laborers, workers or mechanics of the *prevailing wage and supplement rate* for their particular job classification *on each pay stub**. It also requires contractors and subcontractors to *post a notice* at the beginning of the performance of every public work contract *on each job site* that includes the telephone number and address for the Department of Labor and a statement informing laborers, workers or mechanics of their right to contact the Department of Labor if he/she is not receiving the proper prevailing rate of wages and/or supplements for his/her job classification. The required notification will be provided with each wage schedule, may be downloaded from our website *www.labor.ny.gov* or be made available upon request by contacting the Bureau of Public Work at 518-457-5589. *In the event the required information will not fit on the pay stub, an accompanying sheet or attachment of the information will suffice.

(12.20)

To all State Departments, Agency Heads and Public Benefit Corporations
IMPORTANT NOTICE REGARDING PUBLIC WORK ENFORCEMENT FUND

Budget Policy & Reporting Manual

B-610

Public Work Enforcement Fund

effective date December 7, 2005

---

1. Purpose and Scope:

This Item describes the Public Work Enforcement Fund (the Fund, PWEF) and its relevance to State agencies and public benefit corporations engaged in construction or reconstruction contracts, maintenance and repair, and announces the recently-enacted increase to the percentage of the dollar value of such contracts that must be deposited into the Fund. This item also describes the roles of the following entities with respect to the Fund:

- New York State Department of Labor (DOL),
- The Office of the State of Comptroller (OSC), and
- State agencies and public benefit corporations.

2. Background and Statutory References:

DOL uses the Fund to enforce the State's Labor Law as it relates to contracts for construction or reconstruction, maintenance and repair, as defined in subdivision two of Section 220 of the Labor Law. State agencies and public benefit corporations participating in such contracts are required to make payments to the Fund.

Chapter 511 of the Laws of 1995 (as amended by Chapter 513 of the Laws of 1997, Chapter 655 of the Laws of 1999, Chapter 376 of the Laws of 2003 and Chapter 407 of the Laws of 2005) established the Fund.

3. Procedures and Agency Responsibilities:

The Fund is supported by transfers and deposits based on the value of contracts for construction and reconstruction, maintenance and repair, as defined in subdivision two of Section 220 of the Labor Law, into which all State agencies and public benefit corporations enter.

Chapter 407 of the Laws of 2005 increased the amount required to be provided to this fund to .10 of one-percent of the total cost of each such contract, to be calculated at the time agencies or public benefit corporations enter into a new contract or if a contract is amended. The provisions of this bill became effective August 2, 2005.

To all State Departments, Agency Heads and Public Benefit Corporations
IMPORTANT NOTICE REGARDING PUBLIC WORK ENFORCEMENT FUND

OSC will report to DOL on all construction-related ("D") contracts approved during the month, including contract amendments, and then DOL will bill agencies the appropriate assessment monthly. An agency may then make a determination if any of the billed contracts are exempt and so note on the bill submitted back to DOL. For any instance where an agency is unsure if a contract is or is not exempt, they can call the Bureau of Public Work at the number noted below for a determination. Payment by check or journal voucher is due to DOL within thirty days from the date of the billing. DOL will verify the amounts and forward them to OSC for processing.

For those contracts which are not approved or administered by the Comptroller, monthly reports and payments for deposit into the Public Work Enforcement Fund must be provided to the Administrative Finance Bureau at the DOL within 30 days of the end of each month or on a payment schedule mutually agreed upon with DOL.

Reports should contain the following information:

- Name and billing address of State agency or public benefit corporation;
- State agency or public benefit corporation contact and phone number;
- Name and address of contractor receiving the award;
- Contract number and effective dates;
- Contract amount and PWEF assessment charge (if contract amount has been amended, reflect increase or decrease to original contract and the adjustment in the PWEF charge); and
- Brief description of the work to be performed under each contract.

Checks and Journal Vouchers, payable to the "New York State Department of Labor" should be sent to:

Department of Labor
Administrative Finance Bureau-PWEF Unit
Building 12, Room 464
State Office Campus
Albany, NY 12226

Any questions regarding billing should be directed to NYSDOL's Administrative Finance Bureau-PWEF Unit at (518) 457-3624 and any questions regarding Public Work Contracts should be directed to the Bureau of Public Work at (518) 457-5589.

NEW YORK STATE OF OPPORTUNITY. | Department of Labor

Required Notice under Article 25-B of the Labor Law

Attention All Employees, Contractors and Subcontractors: You are Covered by the Construction Industry Fair Play Act

The law says that you are an employee unless:

- You are free from direction and control in performing your job, **and**
- You perform work that is not part of the usual work done by the business that hired you, **and**
- You have an independently established business.

Your employer cannot consider you to be an independent contractor unless all three of these facts apply to your work.

It is against the law for an employer to misclassify employees as independent contractors or pay employees off the books.

Employee Rights: If you are an employee, you are entitled to state and federal worker protections. These include:

- Unemployment Insurance benefits, if you are unemployed through no fault of your own, able to work, and otherwise qualified,
- Workers' compensation benefits for on-the-job injuries,
- Payment for wages earned, minimum wage, and overtime (under certain conditions),
- Prevailing wages on public work projects,
- The provisions of the National Labor Relations Act, and
- A safe work environment.

It is a violation of this law for employers to retaliate against anyone who asserts their rights under the law. Retaliation subjects an employer to civil penalties, a private lawsuit or both.

Independent Contractors: If you are an independent contractor**, you must pay all taxes and Unemployment Insurance contributions required by New York State and Federal Law.**

Penalties for paying workers off the books or improperly treating employees as independent contractors:

- **Civil Penalty** — First offense: Up to $2,500 per employee

  Subsequent offense(s): Up to $5,000 per employee

- **Criminal Penalty** — First offense: Misdemeanor - up to 30 days in jail, up to a $25,000 fine and debarment from performing public work for up to one year.

  Subsequent offense(s): Misdemeanor - up to 60 days in jail or up to a $50,000 fine and debarment from performing public work for up to 5 years.

If you have questions about your employment status or believe that your employer may have violated your rights and you want to file a complaint, call the Department of Labor at (866) 435-1499 or send an email to dol.misclassified@labor.ny.gov. All complaints of fraud and violations are taken seriously. You can remain anonymous.

Employer Name:

WE ARE YOUR DOL

New York State Department of Labor
Bureau of Public Work

Attention Employees

THIS IS A:

PUBLIC WORK PROJECT

If you are employed on this project as a **worker, laborer, or mechanic** you are entitled to receive the **prevailing wage and supplements rate** for the classification at which you are working.

Your pay stub and wage notice received upon hire must clearly state your wage rate and supplement rate.

Chapter 629 of the Labor Laws of 2007:

These wages are set by law and must be posted at the work site. They can also be found at:
https://dol.ny.gov/bureau-public-work

If you feel that you have not received proper wages or benefits, please call our nearest office.*

Albany	(518) 457-2744	Patchogue	(631) 687-4882
Binghamton	(607) 721-8005	Rochester	(585) 258-4505
Buffalo	(716) 847-7159	Syracuse	(315) 428-4056
Garden City	(516) 228-3915	Utica	(315) 793-2314
New York City	(212) 932-2419	White Plains	(914) 997-9507
Newburgh	(845) 568-5287		

* For New York City government agency construction projects, please contact the Office of the NYC Comptroller at (212) 669-4443, or www.comptroller.nyc.gov – click on Bureau of Labor Law.

Contractor Name: _____

Project Location: _____

Requirements for OSHA 10 Compliance

Article 8 §220-h requires that when the advertised specifications, for every contract for public work, is $250,000.00 or more the contract must contain a provision requiring that every worker employed in the performance of a public work contract shall be certified as having completed an OSHA 10 safety training course. The clear intent of this provision is to require that all employees of public work contractors, required to be paid prevailing rates, receive such training "prior to the performing any work on the project."

The Bureau will enforce the statute as follows:

All contractors and sub contractors must attach a copy of proof of completion of the OSHA 10 course to the first certified payroll submitted to the contracting agency and on each succeeding payroll where any new or additional employee is first listed.

Proof of completion may include but is not limited to:

- Copies of bona fide course completion card (*Note: Completion cards do not have an expiration date.)*
- Training roster, attendance record of other documentation from the certified trainer pending the issuance of the card.
- Other valid proof

**A certification by the employer attesting that all employees have completed such a course is not sufficient proof that the course has been completed.

Any questions regarding this statute may be directed to the New York State Department of Labor, Bureau of Public Work at 518-457-5589.

WICKS

Public work projects are subject to the Wicks Law requiring separate specifications and bidding for the plumbing, heating and electrical work, when the total project's threshold is $3 million in Bronx, Kings, New York, Queens and, Richmond counties; $1.5 million in Nassau, Suffolk and Westchester counties; and $500,000 in all other counties.

For projects below the monetary threshold, bidders must submit a sealed list naming each subcontractor for the plumbing, HVAC and electrical and the amount to be paid to each. The list may not be changed unless the public owner finds a legitimate construction need, including a change in specifications or costs or the use of a Project Labor Agreement (PLA), and must be open to public inspection.

Allows the state and local agencies and authorities to waive the Wicks Law and use a PLA if it will provide the best work at the lowest possible price. If a PLA is used, all contractors shall participate in apprentice training programs in the trades of work it employs that have been approved by the Department of Labor (DOL) for not less than three years. They shall also have at least one graduate in the last three years and use affirmative efforts to retain minority apprentices. PLA's would be exempt from Wicks, but deemed to be public work subject to prevailing wage enforcement.

The Commissioner of Labor shall have the power to enforce separate specification requirement s on projects, and may issue stop-bid orders against public owners for non-compliance.

Other new monetary thresholds, and similar sealed bidding for non-Wicks projects, would apply to certain public authorities including municipal housing authorities, NYC Construction Fund, Yonkers Educational Construction Fund, NYC Municipal Water Finance Authority, Buffalo Municipal Water Finance Authority, Westchester County Health Care Association, Nassau County Health Care Corp., Clifton-Fine Health Care Corp., Erie County Medical Center Corp., NYC Solid Waste Management Facilities, and the Dormitory Authority.

Contractors must pay subcontractors within a 7 days period.

(07.19)

Introduction to the Prevailing Rate Schedule

Information About Prevailing Rate Schedule

This information is provided to assist you in the interpretation of particular requirements for each classification of worker contained in the attached Schedule of Prevailing Rates.

Classification

It is the duty of the Commissioner of Labor to make the proper classification of workers taking into account whether the work is heavy and highway, building, sewer and water, tunnel work, or residential, and to make a determination of wages and supplements to be paid or provided. It is the responsibility of the public work contractor to use the proper rate. If there is a question on the proper classification to be used, please call the district office located nearest the project. District office locations and phone numbers are listed below.

Prevailing Wage Schedules are issued separately for "General Construction Projects" and "Residential Construction Projects" on a county-by-county basis.

General Construction Rates apply to projects such as: Buildings, Heavy & Highway, and Tunnel and Water & Sewer rates.

Residential Construction Rates generally apply to construction, reconstruction, repair, alteration, or demolition of one family, two family, row housing, or rental type units intended for residential use.

Some rates listed in the Residential Construction Rate Schedule have a very limited applicability listed along with the rate. Rates for occupations or locations not shown on the residential schedule must be obtained from the General Construction Rate Schedule. Please contact the local Bureau of Public Work office before using Residential Rate Schedules, to ensure that the project meets the required criteria.

Payrolls and Payroll Records

Contractors and subcontractors are required to establish, maintain, and preserve for not less that six (6) years, contemporaneous, true, and accurate payroll records.

Every contractor and subcontractor shall submit to the Department of Jurisdiction (Contracting Agency), within thirty (30) days after issuance of its first payroll and every thirty (30) days thereafter, a transcript of the original payrolls, subscribed and affirmed as true under penalty of perjury.

Paid Holidays

Paid Holidays are days for which an eligible employee receives a regular day's pay, but is not required to perform work. If an employee works on a day listed as a paid holiday, this remuneration is in addition to payment of the required prevailing rate for the work actually performed.

Overtime

At a minimum, all work performed on a public work project in excess of eight hours in any one day or more than five days in any workweek is overtime. However, the specific overtime requirements for each trade or occupation on a public work project may differ. Specific overtime requirements for each trade or occupation are contained in the prevailing rate schedules.

Overtime holiday pay is the premium pay that is required for work performed on specified holidays. It is only required where the employee actually performs work on such holidays.

The applicable holidays are listed under HOLIDAYS: OVERTIME. The required rate of pay for these covered holidays can be found in the OVERTIME PAY section listings for each classification.

Supplemental Benefits

Particular attention should be given to the supplemental benefit requirements. Although in most cases the payment or provision of supplements is straight time for all hours worked, some classifications require the payment or provision of supplements, or a portion of the supplements, to be paid or provided at a premium rate for premium hours worked. Supplements may also be required to be paid or provided on paid holidays, regardless of whether the day is worked. The Overtime Codes and Notes listed on the particular wage classification will indicate these conditions as required.

Effective Dates

When you review the schedule for a particular occupation, your attention should be directed to the dates above the column of rates. These are the dates for which a given set of rates is effective. The rate listed is valid until the next effective rate change or until the new annual determination which takes effect on July 1 of each year. All contractors and subcontractors are required to pay the current prevailing rates of wages and supplements. If you have any questions please contact the Bureau of Public Work or visit the New York State Department of Labor website (www.labor.ny.gov) for current wage rate information.

Apprentice Training Ratios

The following are the allowable ratios of registered Apprentices to Journey-workers.

For example, the ratio 1:1,1:3 indicates the allowable initial ratio is one Apprentice to one Journeyworker. The Journeyworker must be in place on the project before an Apprentice is allowed. Then three additional Journeyworkers are needed before a second Apprentice is allowed. The last ratio repeats indefinitely. Therefore, three more Journeyworkers must be present before a third Apprentice can be hired, and so on.

Please call Apprentice Training Central Office at (518) 457-6820 if you have any questions.

Title (Trade)	Ratio
Boilermaker (Construction)	1:1,1:4
Boilermaker (Shop)	1:1,1:3
Carpenter (Bldg.,H&H, Pile Driver/Dockbuilder)	1:1,1:4
Carpenter (Residential)	1:1,1:3
Electrical (Outside) Lineman	1:1,1:2
Electrician (Inside)	1:1,1:3
Elevator/Escalator Construction & Modernizer	1:1,1:2
Glazier	1:1,1:3
Insulation & Asbestos Worker	1:1,1:3
Iron Worker	1:1,1:4
Laborer	1:1,1:3
Mason	1:1,1:4
Millwright	1:1,1:4
Op Engineer	1:1,1:5
Painter	1:1,1:3
Plumber & Steamfitter	1:1,1:3
Roofer	1:1,1:2
Sheet Metal Worker	1:1,1:3
Sprinkler Fitter	1:1,1:2

If you have any questions concerning the attached schedule or would like additional information, please contact the nearest BUREAU of PUBLIC WORK District Office or write to:

New York State Department of Labor
Bureau of Public Work
State Office Campus, Bldg. 12
Albany, NY 12226

District Office Locations:	Telephone #	FAX #
Bureau of Public Work - Albany	518-457-2744	518-485-0240
Bureau of Public Work - Binghamton	607-721-8005	607-721-8004
Bureau of Public Work - Buffalo	716-847-7159	716-847-7650
Bureau of Public Work - Garden City	516-228-3915	516-794-3518
Bureau of Public Work - Newburgh	845-568-5287	845-568-5332
Bureau of Public Work - New York City	212-932-2419	212-775-3579
Bureau of Public Work - Patchogue	631-687-4882	631-687-4902
Bureau of Public Work - Rochester	585-258-4505	585-258-4708
Bureau of Public Work - Syracuse	315-428-4056	315-428-4671
Bureau of Public Work - Utica	315-793-2314	315-793-2514
Bureau of Public Work - White Plains	914-997-9507	914-997-9523
Bureau of Public Work - Central Office	518-457-5589	518-485-1870

Rockland County General Construction

Boilermaker 02/01/2025

JOB DESCRIPTION Boilermaker **DISTRICT** 4

ENTIRE COUNTIES
Bronx, Dutchess, Kings, Nassau, New York, Orange, Putnam, Queens, Richmond, Rockland, Suffolk, Sullivan, Ulster, Westchester

WAGES

Per Hour:	07/01/2024	01/01/2025
Boilermaker	$ 67.38	$ 68.88
Repairs & Renovations	67.38	68.88

Repairs & Renovation: Includes Repairing, Renovating replacement of parts to an existing unit(s).

SUPPLEMENTAL BENEFITS
Per Hour:

Boilermaker	33.5% of hourly	33.5% of Hourly
Repair & Renovations	Wage Paid	Wage Paid
	+ $ 26.85	+ $26.85

NOTE: "Hourly Wage Paid" shall include any and all premium(s) pay.

Repairs & Renovation Includes replacement of parts and repairs & renovation of existing unit.

OVERTIME PAY
See (*B, O, **U) on OVERTIME PAGE
Note:* Includes 9th & 10th hours, double for 11th or more.
** Labor Day ONLY, if worked.

Repairs & Renovation see (B,E,Q) on OT Page

HOLIDAY
Paid: See (1) on HOLIDAY PAGE
Overtime: See (5, 6, 11, 12, 15, 25, 26, 29) on HOLIDAY PAGE

REGISTERED APPRENTICES
Wage per hour:
(1/2) Year Terms at the following percentage of Boilermaker's Wage

1st	2nd	3rd	4th	5th	6th	7th
65%	70%	75%	80%	85%	90%	95%

Supplemental Benefits Per Hour:

	33.5% of Hourly Wage Paid Plus Amount Below	33.5% of Hourly Wage Paid Plus Amount Below
1st Term	$ 20.36	$ 20.36
2nd Term	21.28	21.28
3rd Term	22.22	22.22
4th Term	23.12	23.12
5th Term	24.07	24.07
6th Term	25.00	25.00
7th Term	25.93	25.93

NOTE: "Hourly Wage Paid" shall include any and all premium(s)

4-5

Carpenter 02/01/2025

JOB DESCRIPTION Carpenter **DISTRICT** 8

ENTIRE COUNTIES
Bronx, Kings, Nassau, New York, Putnam, Queens, Richmond, Rockland, Suffolk, Westchester

WAGES
Per hour: 07/01/2024

Piledriver	$ 60.59 + 10.00*
Dockbuilder	$ 60.59 + 10.00*

*This portion of the benefit is NOT subject to the SAME PREMIUM as shown for overtime.

SUPPLEMENTAL BENEFITS
Per hour:

Journeyworker	$ 45.79

OVERTIME PAY
See (B, E2, O) on OVERTIME PAGE

HOLIDAY
Paid: See (1) on HOLIDAY PAGE.

Paid: for 1st & 2nd yr.
Apprentices See (5,6,11,13,25)

Overtime: See (5,6,11,13,25) on HOLIDAY PAGE.

REGISTERED APPRENTICES
Wages per hour
(1)year terms:

1st	2nd	3rd	4th
$26.98 + 5.50*	$32.58 + 5.50*	$40.96 + 5.50*	$49.35 + 5.50*

*This portion of the benefit is NOT subject to the SAME PREMIUM as shown for overtime.

Supplemental benefits per hour:

All Terms: $ 32.34

8-1556 Db

Carpenter 02/01/2025

JOB DESCRIPTION Carpenter **DISTRICT** 8

ENTIRE COUNTIES
Bronx, Kings, Nassau, New York, Queens, Richmond, Rockland, Suffolk, Westchester

WAGES
Per hour: 07/01/2024

Carpet/Resilient Floor Coverer	$ 55.05 + 8.25*

*This portion of the benefit is NOT subject to the SAME PREMIUM as shown for overtime.

INCLUDES HANDLING & INSTALLATION OF ARTIFICIAL TURF AND SIMILAR TURF INDOORS/OUTDOORS.

SUPPLEMENTAL BENEFITS
Per hour:
$ 39.45

OVERTIME PAY
See (B, E, Q) on OVERTIME PAGE

HOLIDAY
Paid: See (18, 19) on HOLIDAY PAGE.

Paid for 1st & 2nd yr.
Apprentices See (5,6,11,13,16,18,19,25)
Overtime: See (5,6,11,13,16,18,19,25) on HOLIDAY PAGE.

REGISTERED APPRENTICES
Wage per hour - (1) year terms:

1st	2nd	3rd	4th
$ 25.20	$ 28.20	$ 32.45	$ 40.33

+ 1.85*	+ 2.35*	+ 2.85*	+ 3.85*

*This portion of the benefit is NOT subject to the SAME PREMIUM as shown for overtime.

Supplemental benefits per hour:

1st	2nd	3rd	4th
$ 15.22	$ 16.22	$ 19.32	$ 20.32

8-2287

Carpenter 02/01/2025

JOB DESCRIPTION Carpenter **DISTRICT** 8

ENTIRE COUNTIES
Bronx, Dutchess, Kings, Nassau, New York, Orange, Putnam, Queens, Richmond, Rockland, Suffolk, Westchester

WAGES
Per Hour: 07/01/2024

Marine Construction:

Marine Diver	$ 75.46
	+ 10.00*
Marine Tender	$ 55.00
	+ 10.00*

*This portion of the benefit is NOT subject to the SAME PREMIUM as shown for overtime

SUPPLEMENTAL BENEFITS
Per Hour:

Journeyworker $ 45.65

OVERTIME PAY
See (B, E, E2, Q) on OVERTIME PAGE

HOLIDAY
Paid: See (18, 19) on HOLIDAY PAGE
Overtime: See (5, 6, 11, 13, 16, 18, 19, 25) on HOLIDAY PAGE

REGISTERED APPRENTICES
Wages per hour:
One (1) year terms.

1st year	$ 26.98
	+ 5.50*
2nd year	32.58
	+ 5.50*
3rd year	40.96
	+ 5.50*
4th year	49.35
	+ 5.50*

*This portion of the benefit is NOT subject to the SAME PREMIUM as shown for overtime.

Supplemental Benefits
Per Hour:

All terms $ 32.20

8-1456MC

Carpenter 02/01/2025

JOB DESCRIPTION Carpenter **DISTRICT** 8

ENTIRE COUNTIES
Bronx, Kings, Nassau, New York, Putnam, Queens, Richmond, Rockland, Suffolk, Westchester

WAGES
Per hour: 07/01/2024

Building
Millwright $ 59.35
+ 13.12*

*This portion of the benefit is NOT subject to the SAME PREMIUM as shown for overtime.

SUPPLEMENTAL BENEFITS
Per hour:

Millwright $ 45.41

OVERTIME PAY
See (B, E, Q) on OVERTIME PAGE

HOLIDAY
Paid: See (18, 19) on HOLIDAY PAGE
Paid: See (18,19) on HOLIDAY PAGE.

Overtime See (5,6,8,11,13,18,19,25) on HOLIDAY PAGE.

REGISTERED APPRENTICES
Wages per hour:
One (1) year terms:

1st.	2nd.	3rd.	4th.
$ 32.16	$ 37.61	$ 43.06	$ 53.96
+ 7.08*	+ 8.25*	+ 9.42*	+ 11.76*

*This portion of the benefit is NOT subject to the SAME PREMIUM as shown for overtime.

Supplemental benefits per hour:
One (1) year terms:

1st.	2nd.	3rd.	4th.
$ 30.56	$ 33.09	$ 36.27	$ 40.69

8-740.1

Carpenter 02/01/2025

JOB DESCRIPTION Carpenter **DISTRICT** 8

ENTIRE COUNTIES
Bronx, Kings, Nassau, New York, Queens, Richmond, Rockland, Westchester

PARTIAL COUNTIES
Orange: South of but including the following, Waterloo Mills, Slate Hill, New Hampton, Goshen, Blooming Grove, Mountainville, east to the Hudson River.
Putnam: South of but including the following, Cold Spring, TompkinsCorner, Mahopac, Croton Falls, east to Connecticut border.
Suffolk: West of Port Jefferson and Patchogue Road to Route 112 to the Atlantic Ocean.

WAGES
Per hour: 07/01/2024

Core Drilling:
Driller $ 46.25
+ 3.25*

Driller Helper $ 36.28
+ 3.25*

Note: Hazardous Waste Pay Differential:
For Level C, an additional 15% above wage rate per hour
For Level B, an additional 15% above wage rate per hour
For Level A, an additional 15% above wage rate per hour
Note: When required to work on water: an additional $ 3.00 per hour.

*This portion of the benefit is NOT subject to the SAME PREMIUM as shown for overtime.

SUPPLEMENTAL BENEFITS

Per hour:

Driller and Helper $ 30.24

OVERTIME PAY

See (B, G, P) on OVERTIME PAGE

HOLIDAY
Paid: See (5, 6) on HOLIDAY PAGE
Overtime: See (5, 6) on HOLIDAY PAGE

8-1536-CoreDriller

Carpenter - Building / Heavy&Highway 02/01/2025

JOB DESCRIPTION Carpenter - Building / Heavy&Highway **DISTRICT** 11

ENTIRE COUNTIES
Putnam, Rockland, Westchester

WAGES
WAGES:(per hour)
Applies to CAPRENTER BUILDING/HEAVY & HIGHWAY/TUNNEL:

	07/01/2024	07/01/2025 Additional	07/01/2026 Additional
Base Wage	$ 42.76 +$6.62*	$ 1.25**	$ 1.25**

*For all hours paid straight or premium.
**To be allocated at a later date.

SHIFT WORK
SHIFT DIFFERENTIAL: When it is mandated by a Government Agency irregular or off shift can be worked. The Carpenter shall receive an additional fifteen percent (15%) of wage plus applicable benefits.

SUPPLEMENTAL BENEFITS
Per hour:

Journeyworker $ 31.60

OVERTIME PAY
See (B, E, Q) on OVERTIME PAGE

HOLIDAY
BUILDING:
Paid: See (1) on HOLIDAY PAGE.
Overtime: See (5, 6, 16, 25) on HOLIDAY PAGE.
- Holidays that fall on Sunday will be observed Monday.

HEAVY&HIGHWAY/TUNNEL:
Paid: See (5, 6, 25) on HOLIDAY PAGE
Overtime: See (5, 6) on HOLIDAY PAGE
- Holidays that fall on Sunday will be observed Monday
- Must be employed during the five (5) work days immediately preceding a holiday or during the five (5) work days following the paid holiday to receive holiday pay
- If Employee is entitled to a paid holiday, the Employee is paid the Holiday wage and supplemental benefits whether they work or not. If Employee works the Holiday, the Employee will receive holiday pay (including supplemental benefits), plus the applicable premium wage for working the Holiday. If Employee works in excess of 8 hours on Holiday, then benefits will be paid for any hours in excess of 8 hours.

REGISTERED APPRENTICES
1 year terms at the following wage rates:

1st	2nd	3rd	4th
$ 21.38 +3.84*	$ 25.66 +3.84*	$ 29.93 +3.84*	$ 34.21 +3.84*

*For all hours paid straight or premium

SUPPLEMENTAL BENEFITS per hour:

All terms $ 16.25

11-279.1B/HH

Electrician 02/01/2025

JOB DESCRIPTION Electrician **DISTRICT** 11

ENTIRE COUNTIES
Orange, Putnam, Rockland

PARTIAL COUNTIES

Dutchess: Towns of Fishkill, East Fishkill, and Beacon.

WAGES

Per hour:

	07/01/2024
Electrician Wireman/Technician	$ 50.50 + 9.50*

*For all hours paid straight or premium, not to be included in 3% calculation for supplemental benefits.

NOTE ADDITIONAL AMOUNTS PAID FOR THE FOLLOWING WORK LISTED BELOW (subject to overtime premiums):
- On jobs where employees are required to work from boatswain chairs, swinging scaffolds, etc., forty (40) feet or more above the ground, or under compressed air, using Scottair packs, or gas masks, they shall receive an additional $2.00 per hour above the regular straight time rate.
- Journeyman Wireman working in Shafts, Tunnels or on Barges: $5.00 above the Journeyman Wireman rate of pay
- Journeyman Wireman when performing welding or cable splicing: $3.00 above the Journeyman Wireman rate of pay
- Journeyman Wireman required to have a NYS Asbestos Certificate: $3.00 above the Journeyman Wireman rate of pay
- Journeyman Wireman required to have a CDL: $3.00 above the Journeyman Wireman rate of pay.

SHIFT WORK

SHIFT DIFFERENTIAL: On Public Work in New York State when shift work is mandated either in the job specifications or by the contracting agency, the following rates apply when shift is worked:

Between 4:30pm & 12:30am	$ 59.30 + 9.50*
Between 12:30am & 8:30am	$66.35 + 9.50*

SUPPLEMENTAL BENEFITS

Per hour:	07/01/2024
Journeyman	$ 29.68 plus 3% of straight or premium wage

OVERTIME PAY

See (B, E, Q) on OVERTIME PAGE

HOLIDAY

Paid: See (1) on HOLIDAY PAGE
Overtime: See (5, 6, 13, 15, 16, 25) on HOLIDAY PAGE

When the holiday falls on a Saturday it is observed the Friday before. When the holiday falls on a Sunday it is observed on the Monday after.

REGISTERED APPRENTICES

WAGES:
(1)year terms at the following rates

07/01/2024	1st	2nd	3rd	4th	5th	6th
1st Shift	$ 16.01	$ 19.40	$ 24.25	$ 29.10	$ 33.95	$ 36.38
	+1.00*	+1.00*	+1.50*	+2.00*	+2.50*	+2.50*
2nd Shift	18.78	22.76	28.45	34.13	39.82	42.67
	+1.00*	+1.00*	+1.50*	+2.00*	+2.50*	+2.50*
3rd Shift	21.04	25.49	31.86	38.24	44.61	47.80
	+1.00*	+1.00*	+1.50*	+2.00*	+2.50*	+2.50*

09/01/2024	1st	2nd	3rd	4th	5th	6th
1st Shift	$ 16.01	$ 19.40	$ 24.25	$ 29.10	$ 33.95	$ 36.38
	+1.00*	+1.00*	+1.00*	+2.00*	+2.50*	+2.50*
2nd Shift	18.78	22.76	28.45	34.13	39.82	42.67
	+1.00*	+1.00*	+1.00*	+2.00*	+2.50*	+2.50*
3rd Shift	21.04	25.49	31.86	38.24	44.61	47.80
	+1.00*	+1.00*	+1.00*	+2.00*	+2.50*	+2.50*

04/01/2025	1st	2nd	3rd	4th	5th	6th
1st Shift	$ 16.34	$ 19.80	$ 24.75	$ 29.70	$ 34.65	$ 37.13
	+1.00*	+1.00*	+1.00*	+2.00*	+2.50*	+2.50*
2nd Shift	19.17	23.23	29.03	34.84	40.64	43.55
	+1.00*	+1.00*	+1.00*	+2.00*	+2.50*	+2.50*
3rd Shift	21.47	26.02	32.52	39.03	45.53	48.79
	+1.00*	+1.00*	+1.00*	+2.00*	+2.50*	+2.50*

*For all hours paid straight or premium, not to be included in 3% calculation for supplemental benefits.

SUPPLEMENTAL BENEFITS per hour:

07/01/2024	
1st term	$ 16.28 plus 3% of straight or premium wage
2nd term	$ 16.28 plus 3% of straight or premium wage
3rd term	$ 18.28 plus 3% of straight or premium wage
4th term	$ 18.78 plus 3% of straight or premium wage
5th term	$ 20.28 plus 3% of straight or premium wage
6th term	$ 20.28 plus 3% of straight or premium wage
09/01/2024	
1st term	$ 16.28 plus 3% of straight or premium wage
2nd term	$ 17.78 plus 3% of straight or premium wage
3rd term	$ 18.78 plus 3% of straight or premium wage
4th term	$ 19.78 plus 3% of straight or premium wage
5th term	$ 21.28 plus 3% of straight or premium wage
6th term	$ 21.28 plus 3% of straight or premium wage

11-363/1

Elevator Constructor 02/01/2025

JOB DESCRIPTION Elevator Constructor **DISTRICT** 4

ENTIRE COUNTIES
Bronx, Kings, Nassau, New York, Queens, Richmond, Suffolk

PARTIAL COUNTIES
Rockland: Entire County except for the Township of Stony Point
Westchester: Entire County except for the Townships of Bedford, Lewisboro, Cortland, Mt. Kisco, North Salem, Pound Ridge, Somers and Yorktown.

WAGES
Per hour:

	07/01/2024	03/17/2025
Elevator Constructor	$ 80.35	$ 83.37
Modernization & Service/Repair	63.16	65.54

SUPPLEMENTAL BENEFITS
Per Hour:

Elevator Constructor	$ 46.367	$ 47.654
Modernization & Service/Repairs	45.217	46.470

OVERTIME PAY
Constructor See (D, M, T) on OVERTIME PAGE.

Modern/Service See (B, F, S) on OVERTIME PAGE.

HOLIDAY
Paid: See (5, 6, 8, 11, 15, 16, 25) on HOLIDAY PAGE
Overtime: See (5, 6, 8, 11, 15, 16, 25) on HOLIDAY PAGE

REGISTERED APPRENTICES
WAGES PER HOUR:

6 MONTH TERMS:

1st Term*	2nd & 3rd Term*	4th & 5th Term	6th & 7th Term	8th & 9th Term
50%	50%	55%	65%	75%

* Note: 1st, 2nd, 3rd Terms are based on Average of the Constructor, the Modernization and the Service/Repair wage.
Terms 4 thru 9 Based on Journeyman's wage of classification Working in.

SUPPLEMENTAL BENEFITS:

	07/01/2024	03/17/2025
Elevator Constructor		
1st Term	$ 0.00	$ 0.00
2nd & 3rd Term	36.15	36.90

4th & 5th Term	37.19	37.99
6th & 7th Term	38.80	39.70
8th & 9th Term	40.41	41.40
Modernization & Service/Repair		
1st Term	$ 0.00	$ 0.00
2nd & 3rd Term	36.15	36.90
4th & 5th Term	37.19	37.99
6th & 7th Term	38.80	39.70
8th & 9th Term	40.41	41.40

4-1

Elevator Constructor 02/01/2025

JOB DESCRIPTION Elevator Constructor **DISTRICT** 1

ENTIRE COUNTIES
Columbia, Dutchess, Greene, Orange, Putnam, Sullivan, Ulster

PARTIAL COUNTIES
Delaware: Towns of Andes, Bovina, Colchester, Davenport, Delhi, Harpersfield, Hemdon, Kortright, Meredith, Middletown, Roxbury, Hancock & Stamford
Rockland: Only the Township of Stony Point.
Westchester: Only the Townships of Bedford, Lewisboro, Cortland, Mt. Kisco, North Salem, Pound Ridge, Somers and Yorktown.

WAGES

Per Hour	07/01/2024	01/01/2025
Mechanic	$ 70.15	$ 73.07
Helper	70% of Mechanic Wage Rate	70% of Mechanic Wage Rate

SUPPLEMENTAL BENEFITS

Per hour	07/01/2024	01/01/2025
Journeyworker/Helper	$ 37.885*	$ 38.435*

(*)Plus 6% of regular hourly if less than 5 years of service. Plus 8% of regular hourly rate if more than 5 years of service.

OVERTIME PAY
See (D, O) on OVERTIME PAGE

HOLIDAY
Paid: See (5, 6, 15, 16) on HOLIDAY PAGE
Overtime: See (5, 6, 15, 16) on HOLIDAY PAGE
Note: When a paid holiday falls on Saturday, it shall be observed on Friday. When a paid holiday falls on Sunday, it shall be observed on Monday.

REGISTERED APPRENTICES
Wages per hour:

0-6 mo*	6-12 mo	2nd yr	3rd yr	4th yr
50 %	55 %	65 %	70 %	80 %

(*)Plus 6% of the hourly rate, no additional supplemental benefits.

Supplemental Benefits per hour worked:

Same as Journeyperson/Helper

1-138

Glazier 02/01/2025

JOB DESCRIPTION Glazier **DISTRICT** 8

ENTIRE COUNTIES
Bronx, Dutchess, Kings, Nassau, New York, Orange, Putnam, Queens, Richmond, Rockland, Suffolk, Sullivan, Ulster, Westchester

WAGES
Per hour:

	07/01/2024	05/01/2025 Additional
Glazier, Glass Tinting	$ 63.28	$ 1.11***

and Window Film	
Scaffolding, including swing scaffold	67.28
*Mechanical Equipment	64.28
**Repair & Maintenance	30.76

*Mechanical equipment, scissor jacks, man lifts, booms & buckets 30' or more, but not pipe scaffolding.
**Repair & Maintenance- All repair & maintenance work on a particular building whenever performed, where the total cumulative Repair & Maintenance contract value is under $193,000.

***To be allocated at a later date.

SUPPLEMENTAL BENEFITS

Per hour:	7/01/2024
Glazier, Glass Tinting Window Film, Scaffolding and Mechanical Equipment	$ 42.13
Repair & Maintenance	24.62

OVERTIME PAY
See (B, E, Q, V) on OVERTIME PAGE
For 'Repair & Maintenance' see (B, B2, I, S) on overtime page.

HOLIDAY
Paid: See (5, 6, 16, 25) on HOLIDAY PAGE
Overtime: See (5, 6, 16, 25) on HOLIDAY PAGE
For 'Repair & Maintenance'
Paid: See(5, 6, 16, 25)
Overtime: See(5, 6, 16, 25)

REGISTERED APPRENTICES
Wage per hour:
(1) year terms at the following wage rates:

	7/01/2024
1st term	$ 22.34
2nd term	30.64
3rd term	40.87
4th term	50.14

Supplemental Benefits:
(Per hour)

1st term	$ 19.27
2nd term	27.34
3rd term	32.85
4th term	36.01

8-1087 (DC9 NYC)

Insulator - Heat & Frost 02/01/2025

JOB DESCRIPTION Insulator - Heat & Frost **DISTRICT** 8

ENTIRE COUNTIES
Dutchess, Orange, Putnam, Rockland, Westchester

WAGES

Per hour:	07/01/2024
Insulator	$ 60.85
Discomfort & Additional Training**	63.92
Fire Stop Work*	32.97

* Applies on all exclusive Fire Stop Work (When contract is for Fire Stop work only). No apprentices on these contracts only.

**Applies to work requiring; garb or equipment worn against the body not customarily worn by insulators; psychological evaluation ;special training, including but not limited to "Yellow Badge" radiation training

Note: Additional $0.50 per hour for work 30 feet or more above floor or ground level.

SUPPLEMENTAL BENEFITS
Per hour:

Journeyworker	$ 38.25
Discomfort & Additional Training	40.32
Fire Stop Work:	
Journeyworker	19.48

OVERTIME PAY
See (B, E, E2, Q, *T) on OVERTIME PAGE

HOLIDAY
Paid: See (1) on HOLIDAY PAGE
Note: Last working day preceding Christmas and New Years day, workers shall work no later than 12:00 noon and shall receive 8 hrs pay.

Overtime: See (2*, 4, 6, 16, 25) on HOLIDAY PAGE.
*Note: Labor Day triple time if worked.

REGISTERED APPRENTICES
(1) year terms:

Insulator Apprentices:

1st	2nd	3rd	4th
$ 32.97	$ 38.54	$ 44.12	$ 49.70

Discomfort & Additional Training Apprentices:

1st	2nd	3rd	4th
$ 34.51	$ 40.38	$ 46.27	$ 52.16

Supplemental Benefits paid per hour:

Insulator Apprentices:

1st term	$ 19.48
2nd term	23.23
3rd term	26.98
4th term	30.74

Discomfort & Additional Training Apprentices:

1st term	$ 20.50
2nd term	24.47
3rd term	28.43
4th term	32.39

8-91

Ironworker 02/01/2025

JOB DESCRIPTION Ironworker **DISTRICT** 4

ENTIRE COUNTIES
Bronx, Kings, Nassau, New York, Queens, Richmond, Suffolk, Westchester

PARTIAL COUNTIES
Rockland: Southern section - south of Convent Road and east of Blue Hills Road.

WAGES
Per hour: 07/01/2024

Reinforcing & Metal Lathing	$ 56.95
"Base" Wage	55.20 plus $ 1.75

"Base" Wage is used to calculate overtime hours only.

SUPPLEMENTAL BENEFITS
Per hour:
Reinforcing & $ 44.63

Metal Lathing

OVERTIME PAY
See (B, E, Q, *X) on OVERTIME PAGE
*Only $23.50 per Hour for non worked hours

Supplemental Benefit Premiums for Overtime Hours worked:

Time & One Half	$ 51.13
Double Time	57.63

HOLIDAY
Paid: See (1) on HOLIDAY PAGE
Overtime: See (5, 6, 11, 13, *18, **19, 25) on HOLIDAY PAGE

REGISTERED APPRENTICES
(1) year terms at the following wage rates:

Prior to 01/01/2020:

1st term	2nd term	3rd term	4th Term
Wage Per Hour:			
$ 22.55	$ 28.38	$ 34.68	$ 37.18
"Base" Wage			
$21.00	$26.80	$33.10	$35.60
plus $1.55	plus $1.58	plus $1.58	plus $1.58

"Base" Wage is used to calculate overtime hours ONLY.

SUPPLEMENTAL BENIFITS
Per Hour:

1st term	2nd term	3rd term	4th Term
$18.17	$21.34	$22.00	$22.50

After 01/01/2020:

1st term	2nd term	3rd term	4th Term
Wage Per Hour:			
$ 22.55	$ 23.60	$ 24.60	$ 25.65
"Base" Wage			
$21.00	$22.00	$23.00	$24.00
plus $1.55	plus $1.60	plus $1.60	plus $1.65

"Base" Wage is used to calculate overtime hours ONLY.

SUPPLEMENTAL BENIFITS
Per Hour:

1st term	2nd term	3rd term	4th Term
$18.40	$17.40	$16.45	$15.45

4-46Reinf

Ironworker 02/01/2025

JOB DESCRIPTION Ironworker **DISTRICT** 11

ENTIRE COUNTIES
Dutchess, Orange, Putnam, Rockland, Sullivan, Ulster

WAGES
Per hour:

	07/01/2024	07/01/2025 Additional	07/01/2026 Additional
Structural	$ 51.38	$ 2.00*	$2.00*
Reinforcing	51.38	2.00*	2.00*
Ornamental	51.38	2.00*	2.00*
Chain Link Fence	51.38	2.00*	2.00*

* To be allocated at a later date.

NOTE: For Reinforcing classification ONLY, Ironworker 4-46Reinf rates apply in Rockland County's southern section (south of Convent Road and east of Blue Hills Road).

SHIFT WORK

On Government Mandated Irregular Workdays or Shift Work, the following wage will be paid:

1st Shift	$ 51.38
2nd Shift	66.39
3rd Shift	71.39

Note- Any shift that works past 12:00 midnight shall receive the 3rd shift differential.

SUPPLEMENTAL BENEFITS

Per hour:

Journeyman	$ 45.56

OVERTIME PAY

See (B1, Q, V) on OVERTIME PAGE

HOLIDAY

Paid: See (1) on HOLIDAY PAGE
Overtime: See (5, 6, 16) on HOLIDAY PAGE

If a holiday falls on Saturday, it will be observed Friday. If a holiday falls on Sunday, it will be observed Monday.

REGISTERED APPRENTICES

Wages:

(1) year terms at the following wage:

	1st yr	2nd yr	3rd yr	4th yr
1st Shift	$ 25.69	$ 30.83	$ 35.97	$ 41.10
2nd Shift	36.15	42.20	48.25	54.29
3rd Shift	39.64	45.99	52.35	58.69

Supplemental Benefits per hour:

	07/01/2024
1st year	$ 40.94
2nd year	41.86
3rd year	42.79
4th year	43.71

11-417

Laborer - Building 02/01/2025

JOB DESCRIPTION Laborer - Building **DISTRICT** 11

ENTIRE COUNTIES

Rockland

WAGES

Class 1: Custodial and janitorial work, general cleanup, and flag person.

Class 2: Concrete laborer, mason tending, hod carrier, signal person, pressure blasting and washing, chainsaw, demo saw, jackhammers, general labor.

Class 3: Jumping jack, air track drills, grading, explosive handler and blaster, grade checker. When OSHA requires negative pressure respirator.

Class 4: Environmental work including but not limited to asbestos abatement, toxic and hazardous abatement, lead abatement work, mold remediation and biohazards.

WAGES: (per hour)	07/01/2024	06/01/2025 Additional	06/01/2025 Additional
Class 1	$ 43.74	$ 2.60*	$ 2.69*
Class 2	46.96	2.71*	2.81*
Class 3	48.13	2.75*	2.85*
Class 4	49.36	2.80*	2.89*

*To be allocated at a later date.

NOTE: All work five feet or more outside the building foundation line shall be deemed Heavy & Highway

SHIFT WORK

Shift Differential: On all Governmental mandated irregular or off shift work, an additional 25% of wage is required. The 25% shift differential will be paid on public works contract for shifts or irregular workdays outside the normal working hours for 2nd and 3rd shifts or irregular workday or when mandated or required by state, federal, county, local or other governmental agency contracts.

SUPPLEMENTAL BENEFITS
Per Hour:

Journeyman	$ 30.35
Shift Differential	$ 37.22

OVERTIME PAY
See (B, *E, E5, **Q) on OVERTIME PAGE
*For first 8 hours on Saturday
**When an employee is required to work on a holiday which falls on a Sunday the employee shall be paid three (3) times the hourly rate and one (1) hour benefits for every hour worked. When an employee is required to work on a holiday which falls on a Saturday the employee shall be paid two and a half (2.5) times the hourly rate and one hour benefits for every hour worked.

HOLIDAY

Paid:	See (1) on HOLIDAY PAGE.
Overtime:	See (5, 6, 16, 25) on HOLIDAY PAGE.

REGISTERED APPRENTICES
(1000) hour terms at the following wages.

	07/01/2024
1st term	$ 28.05
2nd term	32.35
3rd term	36.70
4th term	41.00

Supplemental Benefits per hour:

All Terms Regular	$ 29.40
All Terms Shift Rate	34.79

11-754B

Laborer - Heavy&Highway 02/01/2025

JOB DESCRIPTION Laborer - Heavy&Highway **DISTRICT** 11

ENTIRE COUNTIES
Rockland

WAGES
CLASS 1: Flag person, gate person.

CLASS 2: General laborer, chuck tender, nipper, powder carrier, magazine tender, concrete men, vibrator men, mason tender, mortar men, traffic control, custodial work, temporary heat, pump men, pit men, dump men, asphalt men, joint setter, signalman, pipe men, riprap, dry stone layers, jack hammer, bush hammer, pavement breaker, men on mulching & seeding machines, all seeding & sod laying, landscape work, walk behind self-propelled power saws, grinder, walk behind rollers and tampers of all types, burner men, filling and wiring of baskets for gabion walls, chain saw operator, railroad track laborers, power buggy, power brush cutter, retention liners, walk behind surface planer, chipping hammer, manhole, catch basin or inlet installing, mortar mixer, laser men. *Micro paving and crack sealing.

CLASS 3: Asbestos, toxic, bioremediation and Phyto-remediation, lead or hazardous materials abatement when certification or license is required, Drilling Equipment Only Where a Separate Air Compressor Unit Supplies Power.

CLASS 4: Asphalt screed man, blaster, all laborers involved in pipejacking and boring operations not exceeding more than 10 feet into pipe, boring or drilled area.

WAGES: (per hour)	07/01/2024
Class 1	$ 45.75
Class 2	49.45
Class 3	53.85
Class 4	58.90

* When laborers are performing micro paving, crack sealing or slurry application when not part of asphalt prep operations laborers shall receive an additional $2.50 per hour over rate.
** To be allocated at a later date.

SHIFT WORK
SHIFT DIFFERENTIAL: Night work and irregular shift require 20% increase on wages for all Government mandated night and irregular shift work.

SUPPLEMENTAL BENEFITS

Per hour:

Journeyman	$ 30.23
Shift Differential	35.72

OVERTIME PAY
See (B, E, P, *R, **S, ***T, X) on OVERTIME PAGE
*For Mon-Fri Holidays, Double Benefits to be paid for all hours worked.
**For Saturday Holidays, Two- and one-half Benefits for all hours worked.
***For Sunday Holidays, Triple Benefits for all hours worked.

HOLIDAY

Paid:	See (5, 6, 15, 25) on HOLIDAY PAGE
Overtime:	See (5, 6, 15, 25) on HOLIDAY PAGE

To be eligible for a paid holiday, an employee must work at least two (2) days in the calendar week or payroll week in which the holiday falls.

REGISTERED APPRENTICES
(1000) hour terms at the following wages.

	07/01/2024
1st term	$ 28.05
2nd term	32.35
3rd term	36.70
4th term	41.00

Supplemental Benefits per hour:

All Terms Regular	$ 29.40
All Terms Shift Rate	34.79

11-754H/H

Laborer - Tunnel 02/01/2025

JOB DESCRIPTION Laborer - Tunnel **DISTRICT** 11

ENTIRE COUNTIES
Columbia, Dutchess, Greene, Orange, Otsego, Putnam, Rockland, Sullivan, Ulster, Westchester

PARTIAL COUNTIES
Chenango: Townships of Columbus, Sherburne and New Berlin.
Delaware: Townships of Andes, Bovina, Middletown, Roxbury, Franklin, Hamden, Stamford, Delhi, Kortright, Harpersfield, Merideth and Davenport.

WAGES
Class 1: All support laborers/sandhogs working above the shaft or tunnel.

Class 2: All laborers/sandhogs working in the shaft or tunnel.

Class 4: Safety Miners

Class 5: Site work related to Shaft/Tunnel

WAGES: (per hour)

	07/01/2024	06/01/2025
Class 1	$ 57.05	$ 58.55
Class 2	59.20	60.70
Class 4	65.60	67.10
Class 5	49.90	51.40

Toxic and hazardous waste, lead abatement and asbestos abatement work will be paid an additional $ 3.00 an hour.

SHIFT WORK
SHIFT DIFFERENTIAL...On all Government mandated irregular shift work:
- Employee shall be paid at time and one half the regular rate Monday through Friday.
- Saturday shall be paid at 1.65 times the regular rate.
- Sunday shall be paid at 2.15 times the regular rate.

SUPPLEMENTAL BENEFITS
Per hour:

Benefit 1	$ 36.98	$ 38.23
Benefit 2	55.39	59.99
Benefit 3	74.58	76.73

Benefit 1 applies to straight time hours, paid holidays not worked.
Benefit 2 applies to over 8 hours in a day (M-F), irregular shift work hours worked, and Saturday hours worked.

Benefit 3 applies to Sunday and Holiday hours worked.

OVERTIME PAY
See (B, E, Q, X) on OVERTIME PAGE

HOLIDAY
Paid: See (5, 6, 15, 25) on HOLIDAY PAGE
Overtime: See (5, 6, 15, 16, 25) on HOLIDAY PAGE

When a recognized Holidays falls on Saturday or Sunday, holidays falling on Saturday shall be recognized or observed on Friday and holidays falling on Sunday shall be recognized or observed on Monday. Employees ordered to work on the Saturday or Sunday of the holiday or on the recognized or the observed Friday or Monday for those holidays falling on Saturday or Sunday shall receive double time the established rate and benefits for the holiday.

REGISTERED APPRENTICES
FOR APPRENTICE RATES, refer to the appropriate Laborer Heavy & Highway wage rate contained in the wage schedule for the County and location where the work is to be performed.

11-17/60/235/754Tun

Lineman Electrician 02/01/2025

JOB DESCRIPTION Lineman Electrician **DISTRICT** 6

ENTIRE COUNTIES
Albany, Allegany, Broome, Cattaraugus, Cayuga, Chautauqua, Chemung, Chenango, Clinton, Columbia, Cortland, Delaware, Dutchess, Erie, Essex, Franklin, Fulton, Genesee, Greene, Hamilton, Herkimer, Jefferson, Lewis, Livingston, Madison, Monroe, Montgomery, Niagara, Oneida, Onondaga, Ontario, Orange, Orleans, Oswego, Otsego, Putnam, Rensselaer, Rockland, Saratoga, Schenectady, Schoharie, Schuyler, Seneca, St. Lawrence, Steuben, Sullivan, Tioga, Tompkins, Ulster, Warren, Washington, Wayne, Wyoming, Yates

WAGES
A Lineman/Technician shall perform all overhead aerial work. A Lineman/Technician on the ground will install all electrical panels, connect all grounds, install and connect all electrical conductors, assembly of all electrical materials, conduit, pipe, or raceway; placing of fish wire; pulling of cables, wires or fiber optic cable through such raceways; splicing of conductors; dismantling of such structures, lines or equipment.

Crane Operators: Operation of any type of crane on line projects.
Crawler Backhoe: Operation of tracked excavator/crawler backhoe with 1/2 yard bucket or larger on line projects.
Digging Machine Operator: All other digging equipment and augering on line projects.

A Groundman/Truck Driver shall: Build and set concrete forms, handle steel mesh, set footer cages, transport concrete in a wheelbarrow, hand or machine concrete vibrator, finish concrete footers, mix mortar, grout pole bases, cover and maintain footers while curing in cold weather, operate jack hammer, operate hand pavement breaker, tamper, concrete and other motorized saws, as a drill helper, operate and maintain generators, water pumps, chainsaws, sand blasting, operate mulching and seeding machine, air tools, electric tools, gas tools, load and unload materials, hand shovel and/or broom, prepare and pour mastic and other fillers, assist digger operator/equipment operator in ground excavation and restoration, landscape work and painting. Only when assisting a lineman technician, a groundman/truck driver may assist in installing conduit, pipe, cables and equipment.

NOTE: Includes Teledata Work within ten (10) feet of High Voltage Transmission Lines. Also includes digging of holes for poles, anchors, footer, and foundations for electrical equipment.

Below rates applicable on all overhead and underground distribution and maintenance work, and all overhead and underground transmission line work and the installation of fiber optic cable where no other construction trades are or have been involved. Includes access matting for line work.

Per hour:	07/01/2024
Group A:	
Lineman, Technician	$ 58.90
Crane, Crawler Backhoe	58.90
Welder, Cable Splicer	58.90
Group B:	
Digging Mach. Operator	53.01
Tractor Trailer Driver	50.07
Groundman, Truck Driver	47.12
Equipment Mechanic	47.12
Flagman	35.34

Additional $1.00 per hour for entire crew when a helicopter is used.

Below rates applicable on all electrical sub-stations, switching structures, fiber optic cable and all other work not defined as "Utility outside electrical work." Includes access matting for line work.

Group A:

Lineman, Technician	$ 58.90
Crane, Crawler Backhoe	58.90
Cable Splicer	64.79
Certified Welder, Pipe Type Cable	61.85
Group B:	
Digging Mach. Operator	53.01
Tractor Trailer Driver	50.07
Groundman, Truck Driver	47.12
Equipment Mechanic	47.12
Flagman	35.34

Additional $1.00 per hour for entire crew when a helicopter is used.

Below rates applicable on all switching structures, maintenance projects, railroad catenary install/maintenance third rail installation, bonding of rails and pipe type cable and installation of fiber optic cable. Includes access matting for line work.

Group A:	
Lineman, Tech, Welder	$ 60.22
Crane, Crawler Backhoe	60.22
Cable Splicer	66.24
Certified Welder, Pipe Type Cable	63.23
Group B:	
Digging Mach. Operator	54.20
Tractor Trailer Driver	51.19
Groundman, Truck Driver	48.18
Equipment Mechanic	48.18
Flagman	36.13

Additional $1.00 per hour for entire crew when a helicopter is used.

Below rates applicable on all overhead and underground transmission line work & fiber optic cable where other construction trades are or have been involved. This applies to transmission line work only, not other construction. Includes access matting for line work.

Group A:	
Lineman, Tech, Welder	$ 61.41
Crane, Crawler Backhoe	61.41
Group B:	
Digging Mach. Operator	55.27
Tractor Trailer Driver	52.20
Groundman, Truck Driver	49.13
Equipment Mechanic	49.13
Flagman	36.85

Additional $1.00 per hour for entire crew when a helicopter is used.

SHIFT WORK

THE FOLLOWING RATES WILL APPLY ON ALL CONTRACTING AGENCY MANDATED MULTIPLE SHIFTS OF AT LEAST FIVE (5) DAYS DURATION WORKED BETWEEN THE HOURS LISTED BELOW:

1ST SHIFT	8:00 AM to 4:30 PM REGULAR RATE
2ND SHIFT	4:30 PM to 1:00 AM REGULAR RATE PLUS 17.3 %
3RD SHIFT	12:30 AM to 9:00 AM REGULAR RATE PLUS 31.4 %

SUPPLEMENTAL BENEFITS

Per hour:

	07/01/2024
Group A	$ 30.90 *plus 7% of the hourly wage paid
Group B	$ 26.90 *plus 7% of

the hourly
wage paid

*The 7% is based on the hourly wage paid, straight time or premium time.

OVERTIME PAY
See (B, E, Q, X) on OVERTIME PAGE. NOTE: Double time for all emergency work designated by the Dept. of Jurisdiction.
WAGE CAP - Double the straight time hourly base wage shall be the maximum hourly wage compensation for any hour worked. Contractor is still responsible to pay the hourly benefit amount for each hour worked.

HOLIDAY

Paid	See (5, 6, 8, 13, 25) on HOLIDAY PAGE plus Governor of NYS Election Day.
Overtime	See (5, 6, 8, 13, 25) on HOLIDAY PAGE plus Governor of NYS Election Day.

NOTE: All paid holidays falling on Saturday shall be observed on the preceding Friday. All paid holidays falling on Sunday shall be observed on the following Monday. Supplements for holidays paid at straight time.

REGISTERED APPRENTICES
WAGES per hour: 1000 hour terms at the following percentage of the applicable Journeyworker's Lineman wage.

1st	2nd	3rd	4th	5th	6th	7th
60%	65%	70%	75%	80%	85%	90%

SUPPLEMENTAL BENEFITS per hour:

07/01/2024
$ 26.90
*plus 7% of the hourly wage paid

*The 7% is based on the hourly wage paid, straight time or premium time.

6-1249a

Lineman Electrician - Teledata 02/01/2025

JOB DESCRIPTION Lineman Electrician - Teledata **DISTRICT** 6

ENTIRE COUNTIES
Albany, Allegany, Broome, Cattaraugus, Cayuga, Chautauqua, Chemung, Chenango, Clinton, Columbia, Cortland, Delaware, Dutchess, Erie, Essex, Franklin, Fulton, Genesee, Greene, Hamilton, Herkimer, Jefferson, Lewis, Livingston, Madison, Monroe, Montgomery, Niagara, Oneida, Onondaga, Ontario, Orange, Orleans, Oswego, Otsego, Putnam, Rensselaer, Rockland, Saratoga, Schenectady, Schoharie, Schuyler, Seneca, St. Lawrence, Steuben, Sullivan, Tioga, Tompkins, Ulster, Warren, Washington, Wayne, Westchester, Wyoming, Yates

WAGES
Per hour:

For outside work, stopping at first point of attachment (demarcation).

	07/01/2024	01/01/2025
Cable Splicer	$ 39.24	$ 40.81
Installer, Repairman	$ 37.24	$ 38.73
Teledata Lineman	$ 37.24	$ 38.73
Tech., Equip. Operator	$ 37.24	$ 38.73
Groundman	$ 19.74	$ 20.53

NOTE: EXCLUDES Teledata work within ten (10) feet of High Voltage (600 volts and over) transmission lines. For this work please see LINEMAN.

SHIFT WORK
THE FOLLOWING RATES APPLY WHEN THE CONTRACTING AGENCY MANDATES MULTIPLE SHIFTS OF AT LEAST FIVE (5) DAYS DURATION ARE WORKED. WHEN TWO (2) OR THREE (3) SHIFTS ARE WORKED THE FOLLOWING RATES APPLY:

1ST SHIFT	REGULAR RATE
2ND SHIFT	REGULAR RATE PLUS 10%
3RD SHIFT	REGULAR RATE PLUS 15%

SUPPLEMENTAL BENEFITS

Per hour:	07/01/2024	01/01/2025
Journeyworker	$ 5.70	$ 5.70
	*plus 3% of	*plus 3% of

	the hour wage paid	the hour wage paid

*The 3% is based on the hourly wage paid, straight time rate or premium rate.

OVERTIME PAY
See (B, E, Q) on OVERTIME PAGE
WAGE CAP - Double the straight time hourly base wage shall be the maximum hourly wage compensation for any hour worked. Contractor is still responsible to pay the hourly benefit amount for each hour worked.

HOLIDAY
Paid: See (1) on HOLIDAY PAGE
Overtime: See (5, 6, 16) on HOLIDAY PAGE

6-1249LT - Teledata

Lineman Electrician - Traffic Signal, Lighting 02/01/2025

JOB DESCRIPTION Lineman Electrician - Traffic Signal, Lighting **DISTRICT** 6

ENTIRE COUNTIES
Columbia, Dutchess, Orange, Putnam, Rockland, Ulster

WAGES
Lineman/Technician shall perform all overhead aerial work. A Lineman/Technician on the ground will install all electrical panels, connect all grounds, install and connect all electrical conductors which includes, but is not limited to road loop wires; conduit and plastic or other type pipes that carry conductors, flex cables and connectors, and to oversee the encasement or burial of such conduits or pipes.

Crane Operators: Operation of any type of crane on Traffic Signal/Lighting projects.
Crawler Backhoe: Operation of tracked excavator/crawler backhoe with 1/2 yard bucket or larger on Traffic Signal/Lighting projects.
Digging Machine Operator: All other digging equipment and augering on Traffic Signal/Lighting projects.

A Groundman/Truck Driver shall: Build and set concrete forms, handle steel mesh, set footer cages, transport concrete in a wheelbarrow, hand or machine concrete vibrator, finish concrete footers, mix mortar, grout pole bases, cover and maintain footers while curing in cold weather, operate jack hammer, operate hand pavement breaker, tamper, concrete and other motorized saws, as a drill helper, operate and maintain generators, water pumps, chainsaws, sand blasting, operate mulching and seeding machine, air tools, electric tools, gas tools, load and unload materials, hand shovel and/or broom, prepare and pour mastic and other fillers, assist digger operator/equipment operator in ground excavation and restoration, landscape work and painting. Only when assisting a lineman technician, a groundman/truck driver may assist in installing conduit, pipe, cables and equipment.

A flagger's duties shall consist of traffic control only.

Per hour:	07/01/2024
Group A:	
Lineman, Technician	$ 51.82
Crane, Crawler Backhoe	51.82
Certified Welder	54.41
Group B:	
Digging Machine	46.64
Tractor Trailer Driver	44.05
Groundman, Truck Driver	41.46
Equipment Mechanic	41.46
Flagman	31.09

Above rates are applicable for installation, testing, operation, maintenance and repair on all Traffic Control (Signal) and Illumination (Lighting) projects, Traffic Monitoring Systems, and Road Weather Information Systems. Includes digging of holes for poles, anchors, footer foundations for electrical equipment; assembly of all electrical materials or raceway; placing of fish wire; pulling of cables, wires or fiber optic cable through such raceways; splicing of conductors; dismantling of such structures, lines or equipment.

SHIFT WORK
THE FOLLOWING RATES WILL APPLY ON ALL CONTRACTING AGENCY MANDATED MULTIPLE SHIFTS OF AT LEAST FIVE (5) DAYS DURATION WORKED BETWEEN THE HOURS LISTED BELOW:

1ST SHIFT	8:00 AM TO 4:30 PM REGULAR RATE
2ND SHIFT	4:30 PM TO 1:00 AM REGULAR RATE PLUS 17.3%
3RD SHIFT	12:30 AM TO 9:00 AM REGULAR RATE PLUS 31.4%

SUPPLEMENTAL BENEFITS
Per hour worked:

07/01/2024

Group A:	$ 30.90 *plus 7% of the hourly wage paid
Group B	$ 26.90 *plus 7% of the hourly wage paid

*The 7% is based on the hourly wage paid, straight time or premium time.

OVERTIME PAY
See (B, E, Q, X) on OVERTIME PAGE. NOTE: Double time for all emergency work designated by the Dept. of Jurisdiction.
WAGE CAP - Double the straight time hourly base wage shall be the maximum hourly wage compensation for any hour worked. Contractor is still responsible to pay the hourly benefit amount for each hour worked.

HOLIDAY
Paid: See (5, 6, 8, 13, 25) on HOLIDAY PAGE and Governor of NYS Election Day.
Overtime: See (5, 6, 8, 13, 25) on HOLIDAY PAGE and Governor of NYS Election Day.

NOTE: All paid holidays falling on Saturday shall be observed on the preceding Friday. All paid holidays falling on Sunday shall be observed on the following Monday. Supplements for holidays paid at straight time.

REGISTERED APPRENTICES
WAGES per hour: 1000 hour terms at the following percentage of the applicable Journeyworker's Lineman wage.

1st	2nd	3rd	4th	5th	6th	7th
60%	65%	70%	75%	80%	85%	90%

SUPPLEMENTAL BENEFITS per hour:

07/01/2024
$ 26.90 *plus 7% of the hourly wage paid

*The 7% is based on the hourly wage paid, straight time or premium time.

6-1249aReg8LT

Lineman Electrician - Tree Trimmer 02/01/2025

JOB DESCRIPTION Lineman Electrician - Tree Trimmer **DISTRICT** 6

ENTIRE COUNTIES
Albany, Allegany, Broome, Cattaraugus, Cayuga, Chautauqua, Chemung, Chenango, Clinton, Columbia, Cortland, Delaware, Dutchess, Erie, Essex, Franklin, Fulton, Genesee, Greene, Hamilton, Herkimer, Jefferson, Lewis, Livingston, Madison, Monroe, Montgomery, Niagara, Oneida, Onondaga, Ontario, Orange, Orleans, Oswego, Otsego, Putnam, Rensselaer, Rockland, Saratoga, Schenectady, Schoharie, Schuyler, Seneca, St. Lawrence, Steuben, Sullivan, Tioga, Tompkins, Ulster, Warren, Washington, Wayne, Wyoming, Yates

WAGES
Applies to line clearance, tree work and right-of-way preparation on all new or existing energized overhead or underground electrical, telephone and CATV lines. This also includes stump removal near underground energized electrical lines including telephone and CATV lines.

Per hour:	07/01/2024
Tree Trimmer	$ 31.44
Equipment Operator	27.80
Equipment Mechanic	27.80
Truck Driver	23.15
Groundman	19.07
Flag person	15.00*

*NOTE-Rate effective on 01/01/2025 - $15.50 due to minimum wage increase.

SUPPLEMENTAL BENEFITS
Per hour:

07/01/2024

Journeyworker	$ 10.48 *plus 4.5% of the hourly wage paid

* The 4.5% is based on the hourly wage paid, straight time rate or premium rate.

OVERTIME PAY
See (B, E, Q, X) on OVERTIME PAGE
WAGE CAP - Double the straight time hourly base wage shall be the maximum hourly wage compensation for any hour worked. Contractor is still responsible to pay the hourly benefit amount for each hour worked.

HOLIDAY
Paid: See (5, 6, 8, 15) on HOLIDAY PAGE
Overtime: See (5, 6, 8, 15, 16, 25) on HOLIDAY PAGE
NOTE: All paid holidays falling on a Saturday shall be observed on the preceding Friday. All paid holidays falling on a Sunday shall be observed on the following Monday.

6-1249TT

Mason - Building 02/01/2025

JOB DESCRIPTION Mason - Building **DISTRICT** 9

ENTIRE COUNTIES
Nassau, Rockland, Suffolk, Westchester

WAGES

Per hour:	07/01/2024	12/02/2024
Tile Finisher	$ 49.08	$ 49.21

*To be allocated at a later date.

SUPPLEMENTAL BENEFITS
Per Hour:

	$ 24.56*	$ 25.01*
	+ 8.32	+ 8.33

*This portion of benefits is subjected to same premium rate as shown for overtime wages

OVERTIME PAY
See (B, E, Q, *V) on OVERTIME PAGE
*Work beyond 10 hours on a Saturday shall be paid at double the hourly wage rate.

HOLIDAY
Paid: See (1) on HOLIDAY PAGE
Overtime: See (5, 6, 11, 15, 16, 25) on HOLIDAY PAGE

9-7/88A-tf

Mason - Building 02/01/2025

JOB DESCRIPTION Mason - Building **DISTRICT** 9

ENTIRE COUNTIES
Nassau, Rockland, Suffolk, Westchester

WAGES

Per hour:	07/01/2024	12/02/2024
Tile Setters	$ 63.91	$ 64.16

SUPPLEMENTAL BENEFITS
Per Hour:

	$ 27.66*	$ 28.11*
	+8.50	+8.51

* This portion of benefits subject to same premium rate as shown for overtime wages.

OVERTIME PAY
See (B, E, Q, V) on OVERTIME PAGE
Work beyond 10 hours on Saturday shall be paid at double the hourly wage rate.

HOLIDAY
Paid: See (1) on HOLIDAY PAGE
Overtime: See (5, 6, 11, 15, 16, 25) on HOLIDAY PAGE

REGISTERED APPRENTICES

Wage per hour:

(750 hour) term at the following wage rate:

Term:	1st 1-750	2nd 751-1500	3rd 1501-2250	4th 2251-3000	5th 3001-3750	6th 3751-4500	7th 4501-5250	8th 5251-6000	9th 6001-6750	10th 6501-7000
07/01/2024	$22.19	$27.21	$34.45	$39.46	$43.07	$46.58	$50.23	$55.24	$57.71	$62.00
12/02/24	$22.29	$27.35	$34.36	$39.41	$43.05	$46.60	$50.29	$55.33	$57.84	$62.20

Supplemental Benefits per hour:

	1st	2nd	3rd	4th	5th	6th	7th	8th	9th	10th
07/01/2024	$12.55* +$.76	$12.55* +$.81	$15.36* +$.91	$15.36* +$.96	$16.36* +$1.43	$17.86* +$1.48	$18.86* +$1.91	$18.86* +$1.97	$18.86* +$4.57	$24.11* +$5.18
12/02/24	$12.70* +$.76	$12.70* +$.81	$15.81* +$.91	$15.81* +$.96	$16.81* +$1.43	$18.31* +$1.48	$19.31* +$1.91	$19.31* +$1.97	$19.31* +$4.57	$24.56* +$5.18

* This portion of benefits subject to same premium rate as shown for overtime wages.

9-7/52A

Mason - Building 02/01/2025

JOB DESCRIPTION Mason - Building **DISTRICT** 11

ENTIRE COUNTIES
Putnam, Rockland, Westchester

PARTIAL COUNTIES
Orange: Only the Township of Tuxedo.

WAGES
Per hour:

	07/01/2024
Bricklayer	$ 47.44
Cement Mason	47.44
Plasterer/Stone Mason	47.44
Pointer/Caulker	47.44

Additional $1.00 per hour for power saw work
Additional $0.50 per hour for swing scaffold or staging work

SHIFT WORK
SHIFT WORK: When shift work or an irregular workday is mandated or required by state, federal, county, local or other governmental agency contracts, the following premiums apply:
Irregular workday requires 15% premium
Second shift an additional 15% of wage plus benefits to be paid
Third shift an additional 25% of wage plus benefits to be paid

SUPPLEMENTAL BENEFITS
Per hour:

Journeyman $ 38.50

OVERTIME PAY
OVERTIME:
Cement Mason See (B, E, Q, W) on OVERTIME PAGE.
All Others See (B, E, Q) on OVERTIME PAGE.

HOLIDAY
Paid: See (1) on HOLIDAY PAGE
Overtime: See (5, 6, 16, 25) on HOLIDAY PAGE
Whenever any of the above holidays fall on Sunday, they will be observed on Monday. Whenever any of the above holidays fall on Saturday, they will be observed on Friday.

REGISTERED APPRENTICES
Wages per hour:

750 hour terms at the following percentage of Journeyman's wage

1st	2nd	3rd	4th	5th	6th	7th	8th
50%	55%	60%	65%	70%	75%	80%	85%

Supplemental Benefits per hour

750 hour terms at the following percentage of journeyman supplements

1st	2nd	3rd	4th	5th	6th	7th	8th
50%	55%	60%	65%	70%	75%	80%	85%

Apprentices indentured before June 1st, 2011 receive full journeyman benefits

11-5wp-b

Mason - Building 02/01/2025

JOB DESCRIPTION Mason - Building **DISTRICT** 9

ENTIRE COUNTIES
Bronx, Dutchess, Kings, Nassau, New York, Orange, Putnam, Queens, Richmond, Rockland, Suffolk, Sullivan, Ulster, Westchester

WAGES
Per Hour:

	07/01/2024	01/06/2025
Marble Cutters & Setters	$ 63.92	$ 64.21

SUPPLEMENTAL BENEFITS
Per Hour:

Journeyworker	$ 40.05	$ 40.51

OVERTIME PAY
See (B, E, Q, V) on OVERTIME PAGE

HOLIDAY
Paid: See (1) on HOLIDAY PAGE
Overtime: See (5, 6, 8, 11, 15, 16, 25) on HOLIDAY PAGE

REGISTERED APPRENTICES
Wage Per Hour:

750 hour terms at the following wage

1st	2nd	3rd	4th	5th	6th	7th	8th
0-3000	3001-3750	3751-4500	4501-5250	5251-6000	6001-6750	6751-7500	7500+
07/01/2024							
$ 27.01	$ 40.52	$ 43.88	$ 47.26	$ 50.64	$ 54.32	$ 60.71	$ 63.92
01/06/2025							
$ 27.24	$ 40.84	$ 44.25	$ 47.63	$ 51.05	$ 54.58	$ 60.99	$ 64.21

Supplemental Benefits per hour:

1st	2nd	3rd	4th	5th	6th	7th	8th
07/01/2024							
$ 26.42	$ 29.76	$ 30.61	$ 31.44	$ 32.28	$ 37.55	$ 39.23	$ 40.05
01/06/2025							
$ 26.88	$ 30.14	$ 30.95	$ 31.78	$32.59	$38.07	$ 39.71	$ 40.51

9-7/4

Mason - Heavy&Highway 02/01/2025

JOB DESCRIPTION Mason - Heavy&Highway **DISTRICT** 11

ENTIRE COUNTIES
Putnam, Rockland, Westchester

PARTIAL COUNTIES
Orange: Only the Township of Tuxedo.

WAGES
Per hour:

	07/01/2024
Bricklayer	$ 47.94
Cement Mason	47.94
Marble/Stone Mason	47.94
Plasterer	47.94
Pointer/Caulker	47.94

Additional $1.00 per hour for power saw work
Additional $0.50 per hour for swing scaffold or staging work

SHIFT WORK
When shift work or an irregular workday is mandated or required by state, federal, county, local or other governmental contracts, the following rates apply:

Irregular workday requires 15% premium
Second shift an additional 15% of wage plus benefits to be paid
Third shift an additional 25% of wage plus benefits to be paid

SUPPLEMENTAL BENEFITS
Per hour:

Journeyman	$ 38.50

OVERTIME PAY

Cement Mason	See (B, E, Q, W)
All Others	See (B, E, Q,)

HOLIDAY

Paid:	See (5, 6, 16, 25) on HOLIDAY PAGE
Overtime:	See (5, 6, 16, 25) on HOLIDAY PAGE

- Whenever any of the above holidays fall on Sunday, they will be observed on Monday. Whenever any of the above holidays fall on Saturday, they will be observed on Friday.
- Supplemental Benefits are not paid for paid Holiday
- If Holiday is worked, Supplemental Benefits are paid for hours worked.
- Whenever an Employee works within three (3) calendar days before a holiday, the Employee shall be paid for the Holiday.

REGISTERED APPRENTICES
Wages per hour:

750 hour terms at the following percentage of Journeyman's wage

1st	2nd	3rd	4th	5th	6th	7th	8th
50%	55%	60%	65%	70%	75%	80%	85%

Supplemental Benefits per hour

750 hour terms at the following percentage of journeyman supplements

1st	2nd	3rd	4th	5th	6th	7th	8th
50%	55%	60%	65%	70%	75%	80%	85%

Apprentices indentured before June 1st, 2011 receive full journeyman benefits

11-5WP-H/H

Operating Engineer - Building / Heavy&Highway 02/01/2025

JOB DESCRIPTION Operating Engineer - Building / Heavy&Highway **DISTRICT** 11

ENTIRE COUNTIES
Delaware, Orange, Rockland, Sullivan, Ulster

WAGES
CLASS A5: Cranes, Derricks and Pile Drivers 100 tons or more and Tower Cranes, with 140ft boom and over.
CLASS A4: Cranes, Derricks and Pile Drivers 100 tons or more and Tower Cranes, with 100ft to 139ft boom.
CLASS A3: Cranes, Derricks and Pile Drivers 100 tons or more and Tower Cranes with a boom under 100ft.
CLASS A2: Cranes, Derricks and Pile Drivers less than 100 tons with 140ft boom and over.
CLASS A1: Cranes, Derricks and Pile Drivers less than 100 tons with a 100ft to 139ft boom.

CLASS A: Cranes, Derricks and Pile Drivers less than 100 tons with a boom under 100ft.; Autograde Combination Subgrader, Base Material Spreader and Base Trimmer (CMI and Similar Types); Autograde Pavement profiler (CMI and Similar Types); Autograde Pavement Profiler and Recycle type (CMI and Similar Type); Autograde Placer-Trimmer-Spreader Comb. (CMI & Similar types); Autograde Slipform Paver (CMI & Similar Types); Central Power Plants (all types); Chief of Party; Concrete Paving Machines; Drill (Bauer, AMI and Similar Types); Drillmaster, Quarrymaster (Down the Hole Drill), Rotary Drill, Self-Propelled Hydraulic Drill, Self-Powered Drill; Draglines; Elevator Graders; Excavator; Front End Loaders (5 yds. and over); Gradall's; Grader-Rago; Helicopters (Co-Pilot); Helicopters (Communications Engineer);Juntann Pile Driver; Locomotive (Large); Mucking Machines; Pavement & Concrete Breaker, i.e., Superhammer & Hoe Ram; Roadway Surface Grinder; Prentice Truck; Scooper (Loader and Shovel); Shovels; Tree Chopper with Boom; Trench Machines (Cable Plow); Tunnel Boring Machine; Vacuum Truck

CLASS B: "A" Frame; Backhoe (Combination); Boom Attachment on Loaders (Rate based on size of Bucket) not applicable to Pipehook; Boring and Drilling Machines; Brush Chopper, Shredder and Tree Shredder, Tree Shearer; Bulldozer(Fine Grade); Cableways; Carryalls; Concrete Pump; Concrete Pumping System, Pump Concrete and Similar Types; Conveyors (125 ft. and over); Drill Doctor (duties incl. Dust Collector Maintenance); Front End Loaders (2 yds. but less than 5 yds.); Graders (Finish); Groove Cutting Machine (Ride on Type); Heater Planer; Hoists (all type Hoists, shall also include Steam, Gas, Diesel, Electric, Air Hydraulic, Single and Double Drum, Concrete, Brick Shaft Caisson, Snorkel Roof, and/or any other Similar Type Hoisting Machines, portable or stationary, except Chicago Boom Type); Long Boom Rate to be applied if Hoist is "Outside Material Tower Hoist"**; Hydraulic Cranes-10 tons and under; Hydraulic Dredge; Hydro-Axe; Hydro Blaster; Jacks-Screw Air Hydraulic Power Operated Unit or Console Type (not hand Jack or Pile Load Test Type); Log Skidder; Pans; Pavers (all) concrete; Plate and Frame Filter Press; Pumpcrete Machines, Squeezecrete & Concrete Pumping (regardless of size); Scrapers; Side Booms; "Straddle"Carrier-Ross and similar types; Winch Trucks (Hoisting); Whip Hammer

CLASS C: Asphalt Curbing Machine; Asphalt Plant Engineer; Asphalt Spreader; Autograde Tube Finisher and Texturing Machine (CMI & Similar types); Autograde Curecrete Machine (CMI & Similar Types); Autograde Curb Trimmer & Sidewalk, Shoulder, Slipform (CMI & Similar Types); Bar Bending Machines (Power); Barrier Moving Machine-Zipper; Batchers, Batching Plant and Crusher on Site; Belt Conveyor Systems; Boom Type Skimmer Machines; Bridge Deck Finisher; Bulldozer(except fine grade); Car Dumpers (Railroad); Compressor and Blower Type Units (used independently or mounted on dual purpose Trucks, on Job Site or in conjunction with jobsite, in Loading and Unloading of Concrete, Cement, Fly Ash, Instantcrete, or Similar Type Materials); Compressors (2 or 3 in Battery); Concrete Finishing Machines; Concrete cleaning decontamination machine operator; Concrete Saws and Cutters (Ride-on type); Concrete Spreaders (Hetzel, Rexomatic and Similar Types); Concrete Vibrators; Conveyors (under 125 feet); Crushing Machines; Directional Boring Machines; Ditching Machine-small (Ditch-witch, Vermeer, or Similar type); Dope Pots (Mechanical with or without pump); Dumpsters; Elevator; Fireman; Fork Lifts (Economobile, Lull and Similar Types of Equipment); Front End Loaders (1 yd. and over but under 2 yds.); Generators (2 or 3 in Battery); Giraffe Grinders; Grout Pump; Gunnite Machines (excluding nozzle); Hammer Vibrator (in conjunction with Generator); Heavy Equipment Robotics Operator Technician; Hoists-Roof, Tugger, Aerial Platform Hoist & House Cars; Hoppers; Hopper Doors (power operated); Hydro Blaster; Hydraulic Jacking Trailer; Ladders (motorized); Laddervator; Locomotive-dinky type; Maintenance -Utility Man; Master Environmental Maintenance Technician; Mechanics; Mixers (Excepting Paving Mixers); Motor Patrols; Pavement Breakers (small self - propelled ride on type-also maintains compressor hydraulic unit); Pavement Breaker-truck mounted; Pipe Bending Machine (Power); Pitch Pump; Plaster Pump (regardless of size); Post Hole Digger (Post Pounder & Auger); Pot Hole Killer Trucks or equivalent; Rod Bending Machines (Power); Roller-Black Top; Scales (Power); Seaman pulverizing mixer; Shoulder widener; Silos; Skidsteer (all attachments); Skimmer Machines (boom-type); Steel Cutting Machine (service & maintain); Tam Rock Drill; Tractors; Transfer Machine; Captain (Power Boats); Tug Master (powerboats); Ultra High Pressure Waterjet Cutting Tool System operator/maintenance technician; Vacuum Blasting Machine; Vibrating Plants (used in conjunction with unloading); Welder and Repair Mechanics

CLASS D: Brooms and Sweepers; Chippers; Compressor (single); Concrete Spreaders (small type); Conveyor Loaders (not including Elevator Graders); Engines-large diesel (1620 HP) and Staging Pump; Farm Tractors; Fertilizing Equipment (Operation & Maintenance of); Fine Grade Machine (small type); Form Line Graders (small type); Front End Loader (under 1 yard); Generator (single); Grease, Gas, Fuel and Oil supply trucks; Heaters (Nelson or other type incl. Propane, Natural Gas or Flow type Units); Lights, Portable Generating Light Plants; Mixers (Concrete, small); Mulching Equipment (Operation and Maintenance of); Pumps (2 or less than 4 inch suction); Pumps (4 inch suction and over incl. submersible pumps); Pumps (Diesel Engine and Hydraulic-immaterial of power); Road Finishing Machines (small type); Rollers-grade, fill or stone base; Seeding Equip. (Operation and Maintenance of); Sprinkler & Water Pump Trucks (used on jobsite or in conjunction with jobsite); Steam Jennies and Boilers-irrespective of use; Stone Spreader; Tamping Machines, Vibrating Ride-on; Temporary Heating Plant (Nelson or other type, incl. Propane, Natural Gas or Flow Type Units); Water & Sprinkler Trucks (used on or in conjunction with jobsite); Welding Machines (Gas, Diesel, and/or Electric Converters of any type, single, two, or three in a battery); Wellpoint Systems (including installation by Bull Gang and Maintenance of)

CLASS E: Assistant Engineer/Oiler; Drillers Helper; Maintenance Apprentice (Deck Hand); Maintenance Apprentice (Oiler); Mechanics' Helper; Tire Repair and Maintenance; Transit/Instrument Man

WAGES:(per hour)

	07/01/2024	07/01/2025 Additional
Class A5	$ 66.97 plus 5.00*	$ 2.50***
Class A4	65.97 plus 5.00*	2.50***
Class A3	64.97 plus 5.00*	2.50***
Class A2	62.47 plus 5.00*	2.50***
Class A1	61.47 plus 5.00*	2.50***
Class A	60.47 plus 5.00*	2.50***
Class B	58.88 plus 5.00*	2.50***

Class C	56.97 plus 5.00*	2.50***
Class D	55.34 plus 5.00*	2.50***
Class E	51.63 plus 5.00*	2.50***
Safety Engineer	61.21 plus 5.00*	2.50***
Helicopter:		
Pilot/Engineer	62.29 plus 5.00*	2.50***
Co Pilot	60.47 plus 5.00*	2.50***
Communications Engineer	60.47 plus 5.00*	2.50***
Surveying:		
Chief of Party	60.47 plus 5.00*	2.50***
Transit/Instrument Man	51.63 plus 5.00*	2.50***
Rod/Chainman	51.05 plus 5.00*	2.50***

Additional $0.75 for Survey work Tunnel under compressed air.
Additional $0.50 for Hydrographic work.

*The $5.00 is added to the Class Base Wage for all hours worked. Additionally, the $5.00 is subject to the V-Code listed on the OVERTIME CODE Sheet.

**Outside Material Hoist (Class B) receives additional $ 1.00 per hour on 110 feet up to 199 feet total height, $ 2.00 per hour on 200 feet and over total height.

***To be allocated at a later date

- On HAZARDOUS WASTE REMOVAL or ASBESTOS REMOVAL work, or any state or federally DESIGNATED HAZARDOUS WASTE SITE:

For projects bid on or before April 1, 2020...Where the Operating Engineer is in direct contact with hazardous material and when personal protective equipment is required for respiratory, skin and eye protection, the Operating Engineer shall receive the hourly wage plus an additional twenty percent (20%) of that wage for the entire shift.

For projects bid after April 1, 2020...On hazardous waste removal work of any kind, including state or federally designated site where the operating engineer is required to wear level A, B, or C personal protection the operating engineer shall receive an hourly wage rate of his regular hourly wage plus $5.00 per hour. An operating engineer working at a hazardous waste removal project or site at a task requiring hazardous waste related certification, but who is not working in a zone requiring level A, B, or C personal protection, shall receive an hourly wage rate of his regular rate plus $ 1.00 per hour. This shall also apply to sites where the level D personal protection is required.

SHIFT WORK

- SHIFT WORK: On all Government mandated irregular or off shift work, an additional 15% on straight time hours.

SUPPLEMENTAL BENEFITS

Per hour:

Journeyman	$ 34.00*

*15% premium is also required on shift work benefits

OVERTIME PAY

See (B, E, Q, *V, X) on OVERTIME PAGE
*15% premium is also required on shift work benefits

HOLIDAY

Paid:	See (5, 6, 10, 13, 15) on HOLIDAY PAGE
Overtime:	See (5, 6, 10, 13, 15) on HOLIDAY PAGE

Holidays falling on Sunday will be celebrated on Monday.

REGISTERED APPRENTICES

(1) year terms at the following percentage of journeyman's wage:

1st year	60% of Class base wage plus $5.00*
2nd year	70% of Class base wage plus $5.00*
3rd year	80% of Class base wage plus $5.00*
4th year	90% of Class base wage plus $5.00*

*The $5.00 is added to the Class Base Wage for all hours worked. Additionally, the $5.00 is subject to the V-Code listed on the OVERTIME CODE Sheet.

Supplemental Benefits per hour:

Apprentices	$ 34.00

Operating Engineer - Marine Dredging 02/01/2025

JOB DESCRIPTION Operating Engineer - Marine Dredging **DISTRICT** 4

ENTIRE COUNTIES
Albany, Bronx, Cayuga, Clinton, Columbia, Dutchess, Essex, Franklin, Greene, Jefferson, Kings, Monroe, Nassau, New York, Orange, Oswego, Putnam, Queens, Rensselaer, Richmond, Rockland, St. Lawrence, Suffolk, Ulster, Washington, Wayne, Westchester

WAGES
These wages do not apply to Operating Engineers on land based construction projects. For those projects, please see the Operating Engineer Heavy/Highway Rates. The wage rates below for all equipment and operators are only for marine dredging work in navigable waters found in the counties listed above.

Per Hour:	07/01/2024
CLASS A1 Deck Captain, Leverman, Mechanical Dredge Operator, Licensed Tug Operator 1000HP or more.	$ 45.26
CLASS A2 Crane Operator (360 swing)	40.33
CLASS B Dozer, Front Loader Operator on Land	To conform to Operating Engineer Prevailing Wage in locality where work is being performed including benefits.
CLASS B1 Derrick Operator (180 swing) Spider/Spill Barge Operator Operator II, Fill Placer, Engineer Chief Mate, Electrician,Chief Welder, Maintenance Engineer,Licensed Boat, Crew Boat Operator	39.14
CLASS B2 Certified Welder	36.84
CLASS C1 Drag Barge Operator, Steward, Mate, Assistant Fill Placer	35.83
CLASS C2 Boat Operator	34.68
CLASS D Shoreman, Deckhand, Oiler, Rodman, Scowman, Cook, Messman, Porter/Janitor	28.81

SUPPLEMENTAL BENEFITS
Per Hour:
THE FOLLOWING SUPPLEMENTAL BENEFITS APPLY TO ALL CATEGORIES

All Classes A & B	$ 12.00 plus 7% of straight time wage, Overtime hours add $ 0.63
All Class C & D	$ 11.75 plus 7% of straight time wage, Overtime hours add $ 0.50

OVERTIME PAY
See (B2, F, R) on OVERTIME PAGE

HOLIDAY
Paid: See (1) on HOLIDAY PAGE

Overtime: See (5, 6, 8, 15, 26) on HOLIDAY PAGE

4-25a-MarDredge

Operating Engineer - Steel Erectors 02/01/2025

JOB DESCRIPTION Operating Engineer - Steel Erectors **DISTRICT** 11

ENTIRE COUNTIES
Delaware, Orange, Rockland, Sullivan, Ulster

WAGES
CLASS A3: Cranes, Derricks and Pile Drivers 100 tons or more and Tower Cranes, with a 140 ft. boom and over.

CLASS A2: Cranes, Derricks and Pile Drivers 100 tons or more and Tower Cranes, with up to a 139 ft. boom and under.

CLASS A1: Cranes, Derricks and Pile Drivers less than 100 tons with a 140 ft. boom and over.

CLASS A: Cranes, Derricks and Pile Drivers less than 100 tons with up to a 139 ft. boom and under.

CLASS B: "A" Frame; Cherry Pickers(10 tons and under); Hoists (all type Hoists, shall also include Steam, Gas, Diesel, Electric, Air Hydraulic, Single and Double Drum, Concrete, Brick Shaft Caisson, Snorkel Roof, and/or any other Similar Type Hoisting Machines, portable or stationary, except Chicago Boom Type); Jacks-Screw Air Hydraulic Power Operated Unit or Console Type (not hand Jack or Pile Load Test Type); Side Booms; Straddle Carrier

CLASS C: Aerial Platform used as Hoist; Compressors (2 or 3 in Battery); Concrete cleaning/ decontamination machine operator; Directional Boring Machines; Elevator or House Cars; Conveyers and Tugger Hoists; Fireman; Fork Lifts; Generators (2 or 3 in Battery); Heavy Equipment Robotics Operator/Technician; Master Environmental Maintenance Technician; Maintenance -Utility Man; Rod Bending Machines (Power); Captain(powerboat); Tug Master; Ultra High Pressure Waterjet Cutting Tool System; Vacuum Blasting Machine; Welding Machines(gas or electric,2 or 3 in battery, including diesels); Transfer Machine; Apprentice Engineer/Oiler with either one compressor or one welding machine when used for decontamination and remediation

CLASS D: Compressor (single); Welding Machines (Gas, Diesel, and/or Electric Converters of any type); Welding System Multiple (Rectifier Transformer type)

CLASS E: Assistant Engineer/Oiler; Maintenance Apprentice (Deck Hand);Drillers Helper; Maintenance Apprentice (Oiler); Mechanics' Helper; Transit/Instrument Man

WAGES:(per hour)

	07/01/2024	07/01/2025 Additional
Class A3	$ 68.99 plus 5.00*	$ 2.50**
Class A2	67.33 plus 5.00*	2.50**
Class A1	64.49 plus 5.00*	2.50**
Class A	62.83 plus 5.00*	2.50**
Class B	60.04 plus 5.00*	2.50**
Class C	57.38 plus 5.00*	2.50**
Class D	55.85 plus 5.00*	2.50**
Class E	52.09 plus 5.00*	2.50**
Vacuum Truck	60.80 plus 5.00*	2.50**
Safety Engineer	61.66 plus 5.00*	2.50**
Helicopter:		
Pilot/Engineer	64.49 plus 5.00*	2.50**
Co Pilot	64.10 plus 5.00*	2.50**
Communications Engineer	64.10 plus 5.00*	2.50**
Surveying:		
Chief of Party	60.80 plus 5.00*	2.50**
Transit/Instrument man	52.09 plus 5.00*	2.50**
Rod/Chainman	51.05 plus 5.00*	2.50**

Additional $0.75 for Survey work Tunnels under compressed air.
Additional $0.50 for Hydrographic work.

*The $5.00 is added to the Class Base Wage for all hours worked. Additionally, the $5.00 is subject to the V-Code listed on the OVERTIME CODE Sheet.

**To be allocated at a later date

- On HAZARDOUS WASTE REMOVAL or ASBESTOS REMOVAL work, or any state or federally DESIGNATED HAZARDOUS WASTE SITE:

For projects bid on or before April 1, 2020...Where the Operating Engineer is in direct contact with hazardous material and when personal protective equipment is required for respiratory, skin and eye protection, the Operating Engineer shall receive the hourly wage plus an additional twenty percent (20%) of that wage for the entire shift.

For projects bid after April 1, 2020...On hazardous waste removal work of any kind, including state or federally designated site where the operating engineer is required to wear level A, B, or C personal protection the operating engineer shall receive an hourly wage rate of his regular hourly wage plus $5.00 per hour. An operating engineer working at a hazardous waste removal project or site at a task requiring hazardous waste related certification, but who is not working in a zone requiring level A, B, or C personal protection, shall receive an hourly wage rate of his regular rate plus $ 1.00 per hour. This shall also apply to sites where the level D personal protection is required.

SHIFT WORK

- SHIFT WORK: On all Government mandated irregular or off shift work, an additional 15% on straight time hours.

SUPPLEMENTAL BENEFITS

Per hour:

Journeyman	$ 34.00*

*15% premium is also required on shift work benefits

OVERTIME PAY

See (B, E, Q, *V, X) on OVERTIME PAGE
*15% premium is also required on shift work benefits

HOLIDAY

Paid:	See (5, 6, 10, 13, 15) on HOLIDAY PAGE
Overtime:	See (5, 6, 10, 13, 15) on HOLIDAY PAGE

Holidays falling on Sunday will be celebrated on Monday.

REGISTERED APPRENTICES

(1) year terms at the following percentage of journeyman's wage.

1st year	60% of Class base wage plus $5.00*
2nd year	70% of Class base wage plus $5.00*
3rd year	80% of Class base wage plus $5.00*
4th year	90% of Class base wage plus $5.00*

*The $5.00 is added to the Class Base Wage for all hours worked. Additionally, the $5.00 is subject to the V-Code listed on the OVERTIME CODE Sheet.

Supplemental Benefits per hour:

Apprentices	$ 34.00

11-825SE

Painter 02/01/2025

JOB DESCRIPTION Painter **DISTRICT** 1

ENTIRE COUNTIES

Rockland

WAGES

Wages per hour

	07/01/2024	05/01/2025 Additional
Brush/Paper Hanger	$ 42.01	$ 1.99*
Dry Wall finisher	42.01	1.99*
Sandblaster-Painter	42.01	1.99*
Lead Abatement	42.01	1.99*
Spray Rate	43.01	1.99*

(*) To be allocated at later date.

See Bridge Painters rates for the following work:
Structural Steel, all work performed on tanks, ALL BRIDGES, towers, smoke stacks, flag poles. Rate shall apply to all of said areas from the ground up.

SUPPLEMENTAL BENEFITS

Per hour

Journeyworker $ 27.37

OVERTIME PAY
See (B, E, E2, Q) on OVERTIME PAGE

HOLIDAY
Paid: See (1) on HOLIDAY PAGE
Overtime: See (5, 6) on HOLIDAY PAGE

REGISTERED APPRENTICES
Wages per hour

Six (6) month terms at the following percentage of Journeyperson's wage

1st	2nd	3rd	4th	5th	6th
50%	55%	65%	75%	85%	95%

Supplemental Benefits per hour worked

1st term	$ 11.39
All others	27.37

1-155ROC

Painter - Bridge & Structural Steel 02/01/2025

JOB DESCRIPTION Painter - Bridge & Structural Steel **DISTRICT** 8

ENTIRE COUNTIES
Albany, Bronx, Clinton, Columbia, Dutchess, Essex, Franklin, Fulton, Greene, Hamilton, Kings, Montgomery, Nassau, New York, Orange, Putnam, Queens, Rensselaer, Richmond, Rockland, Saratoga, Schenectady, Schoharie, Suffolk, Sullivan, Ulster, Warren, Washington, Westchester

WAGES
Per Hour:
STEEL:
Bridge Painting: 07/01/2024
$ 56.00
+ 10.35*

ADDITIONAL $7.00 per hour for POWER TOOL/SPRAY, whether straight time or overtime.

NOTE: All premium wages are to be calculated on base rate per hour only.

* For the period of May 1st to November 15th, this amount is payable up to 40 hours. For the period of Nov 16th to April 30th, this amount is payable up to 50 hours. EXCEPTION: First and last week of employment, and for the weeks of Memorial Day, Independence Day and Labor Day, where the amount is paid for the actual number of hours worked (50 hour cap).

NOTE: Generally, for Bridge Painting Contracts, ALL WORKERS on and off the bridge (including Flagmen) are to be paid Painter's Rate; the contract must be ONLY for Bridge Painting.

SHIFT WORK
When directly specified in public agency or authority contract documents for an employer to work a second shift and works the second shift with employees other than from the first shift, all employees who work the second shift will be paid 10% of the base wage shift differential in lieu of overtime for the first eight (8) hours worked after which the employees shall be paid at time and one half of the regular wage rate. When a single irregular work shift is mandated in the job specifications or by the contracting agency, wages shall be paid at time and one half for single shifts between the hours of 3pm-11pm or 11pm-7am.

SUPPLEMENTAL BENEFITS
Per Hour:
Journeyworker:
$ 12.43
+ 31.55*

* For the period of May 1st to November 15th, this amount is payable up to 40 hours. For the period of Nov 16th to April 30th, this amount is payable up to 50 hours. EXCEPTION: First and last week of employment, and for the weeks of Memorial Day, Independence Day and Labor Day, where the amount is paid for the actual number of hours worked (50 hour cap).

OVERTIME PAY
See (B, F, R) on OVERTIME PAGE

HOLIDAY
Paid: See (1) on HOLIDAY PAGE
Overtime: See (4, 6) on HOLIDAY PAGE

REGISTERED APPRENTICES
Wage - Per hour:
Apprentices: (1) year terms.

1st year	$ 22.40 + 4.14
2nd year	$ 33.60 + 6.21
3rd year	$ 44.80 + 8.28

Supplemental Benefits - Per hour:

1st year	$ 1.16 + 12.62
2nd year	$ 7.46 + 18.93
3rd year	$ 9.94 + 25.24

NOTE: All premium wages are to be calculated on base rate per hour only.

8-DC-9/806/155-BrSS

Painter - Line Striping 02/01/2025

JOB DESCRIPTION Painter - Line Striping **DISTRICT** 8

ENTIRE COUNTIES
Albany, Clinton, Columbia, Dutchess, Essex, Franklin, Fulton, Greene, Hamilton, Montgomery, Nassau, Orange, Putnam, Rensselaer, Rockland, Saratoga, Schenectady, Schoharie, Suffolk, Sullivan, Ulster, Warren, Washington, Westchester

WAGES
Per hour:

Painter (Striping-Highway):	07/01/2024	04/01/2025	04/01/2026
Striping-Machine Operator*	$ 34.12	$ 35.49	$ 36.93
Linerman Thermoplastic	41.12	42.74	44.44

Note: * Includes but is not limited to: Positioning of cones and directing of traffic using hand held devices. Excludes the Driver/Operator of equipment used in the maintenance and protection of traffic safety.

SHIFT WORK
When directly specified in public agency or authority contract documents there shall be a 30% night shift premium pay differential for all work performed after 9:00pm and before 5:00am.

SUPPLEMENTAL BENEFITS
Per hour paid:
Journeyworker:

Striping Machine Operator:	$23.65	$ 24.30	$ 24.95
Linerman Thermoplastic:	23.65	24.30	24.95

OVERTIME PAY
See (B, B2, E2, F, S) on OVERTIME PAGE

HOLIDAY
Paid: See (5, 20) on HOLIDAY PAGE
Overtime: See (5, 20) on HOLIDAY PAGE

REGISTERED APPRENTICES
One (1) year terms at the following wage rates:

	07/01/2024	01/01/2025	04/01/2025	04/01/2026
1st Term:	$ 16.00	$ 16.50	$ 16.50	$ 16.50
2nd Term:	20.47	20.47	21.29	22.16
3rd Term:	27.30	27.30	28.39	29.54

Supplemental Benefits per hour:

All terms:	$ 23.65	$ 23.65	$ 24.30	$ 24.95

8-1456-LS

Painter - Metal Polisher 02/01/2025

JOB DESCRIPTION Painter - Metal Polisher **DISTRICT** 8

ENTIRE COUNTIES
Albany, Allegany, Bronx, Broome, Cattaraugus, Cayuga, Chautauqua, Chemung, Chenango, Clinton, Columbia, Cortland, Delaware, Dutchess, Erie, Essex, Franklin, Fulton, Genesee, Greene, Hamilton, Herkimer, Jefferson, Kings, Lewis, Livingston, Madison, Monroe, Montgomery, Nassau, New York, Niagara, Oneida, Onondaga, Ontario, Orange, Orleans, Oswego, Otsego, Putnam, Queens, Rensselaer, Richmond, Rockland, Saratoga, Schenectady, Schoharie, Schuyler, Seneca, St. Lawrence, Steuben, Suffolk, Sullivan, Tioga, Tompkins, Ulster, Warren, Washington, Wayne, Westchester, Wyoming, Yates

WAGES

	07/01/2024
Metal Polisher	$ 39.33
Metal Polisher*	40.43
Metal Polisher**	43.33

*Note: Applies on New Construction & complete renovation
** Note: Applies when working on scaffolds over 34 feet.

SUPPLEMENTAL BENEFITS

Per Hour:	07/01/2024
Journeyworker:	
All classification	$ 12.79

OVERTIME PAY
See (B, E, P, T) on OVERTIME PAGE

HOLIDAY
Paid: See (5, 6, 11, 15, 16, 25, 26) on HOLIDAY PAGE
Overtime: See (5, 6, 11, 15, 16, 25, 26) on HOLIDAY PAGE

REGISTERED APPRENTICES
Wages per hour:
One (1) year term at the following wage rates:

	07/01/2024
1st year	$ 19.67
2nd year	21.63
3rd year	23.60
1st year*	$ 22.06
2nd year*	22.07
3rd year*	24.14
1st year**	$ 22.17
2nd year**	24.13
3rd year**	26.10

*Note: Applies on New Construction & complete renovation
** Note: Applies when working on scaffolds over 34 feet.

Supplemental benefits:
Per hour:

1st year	$ 8.69
2nd year	8.69
3rd year	8.69

8-8A/28A-MP

Plumber 02/01/2025

JOB DESCRIPTION Plumber **DISTRICT** 11

ENTIRE COUNTIES

Orange, Rockland, Sullivan

PARTIAL COUNTIES
Ulster: Only the Townships of Plattekill, Marlboro, Wawarsing, and Shawangunk (except for Wallkill and Shawangunk Prisons).

WAGES
REFRIGERATION: For commercial and industrial refrigeration which means service, maintenance, and installation work where the combined compressor tonnage does not exceed 40 tons.
AIR CONDITIONING: Air conditioning to be installed that is water cooled shall not exceed 25 tons. This will include the piping of the component system and erection of water tower. Air conditioning that is air cooled shall not exceed 50 tons.

WAGES: (per hour)

	07/01/2024	05/01/2025 Additional
Plumber	$ 40.09	$ 2.50*

*To be allocated at a later date

Star Certification: an additional $ 1.00 per hour over scale will be paid to all those who have Star Certification.

SHIFT WORK
Shift Differential: When mandated by the governmental agency, an additional 15% premium will be paid for irregular workday or for 2nd and 3rd shift.

SUPPLEMENTAL BENEFITS
Per hour:
Journeyman
$ 36.78*

*For overtime or shift differential work, $0.10 is paid at straight time, the remaining balance is paid at the same premium as the wages.

OVERTIME PAY
See (B, G, P, *V) on OVERTIME PAGE
* A portion of the benefit amount is subject to the V code for overtime and shift differential work.

HOLIDAY
Paid: See (5, 6, 13, 15, 25) on HOLIDAY PAGE
Overtime: See (5, 6, 13, 15, 25) on HOLIDAY PAGE

REGISTERED APPRENTICES
(1)year terms at the following wage.

	07/01/2024
1st term	$ 18.04
2nd term	22.05
3rd term	26.06
4th term	30.07
5th term	34.08

Supplemental Benefits per hour:
Apprentices

1st term	$ 16.62*
2nd term	20.29*
3rd term	23.95*
4th term	27.63*
5th term	31.19*

*For overtime or shift differential work, $0.10 is paid at straight time, the remaining balance is paid at the same premium as the wages.
11-373 Refrig

Plumber 02/01/2025

JOB DESCRIPTION Plumber **DISTRICT** 11

ENTIRE COUNTIES
Orange, Rockland, Sullivan

PARTIAL COUNTIES
Ulster: Only the Townships of Plattekill, Marlboro, Wawarsing, and Shawangunk (except for Wallkill and Shawangunk Prisons).

WAGES

WAGES:(per hour)	07/01/2024
Plumber/Steamfitter	$ 51.20

Note: For all work 40-60 feet above ground add $ 0.25 per hour, over 60 feet add $ 0.50 per hour.

SHIFT WORK
Shift Differential: When mandated by the governmental agency, an additional 15% premium will be paid for irregular workday or for 2nd and 3rd shift.

SUPPLEMENTAL BENEFITS
Per hour:

Journeyman	$ 45.57

*For overtime or shift differential work, $0.10 is paid at straight time, the remaining balance is paid at the same premium as the wages.

OVERTIME PAY
See (B, E, Q, *V) on OVERTIME PAGE
* A portion of the benefit amount is subject to the V code for overtime and shift differential work.

HOLIDAY
Paid: See (1) on HOLIDAY PAGE
Overtime: See (5, 6, 15, 16) on HOLIDAY PAGE
When a holiday falls on a Saturday, the day prior shall be considered and recognized as the holiday. When a holiday falls on a Sunday, the day proceeding shall be considered and recognized as the holiday to be observed.

REGISTERED APPRENTICES
(1) year terms at the following wages.

	07/01/2024
1st term	$ 17.92
2nd term	23.04
3rd term	28.16
4th term	33.28
5th term	40.96

Supplemental Benefits per hour:

1st term	$ 16.03*
2nd term	20.58*
3rd term	25.12*
4th term	29.68*
5th term	36.48*

*For overtime or shift differential work, $0.10 is paid at straight time, the remaining balance is paid at the same premium as the wages.
11-373 SF

Roofer 02/01/2025

JOB DESCRIPTION Roofer **DISTRICT** 9

ENTIRE COUNTIES
Bronx, Dutchess, Kings, New York, Orange, Putnam, Queens, Richmond, Rockland, Sullivan, Ulster, Westchester

WAGES

Per Hour:	07/01/2024
Roofer/Waterproofer	$ 48.50 + $7.00*

* This portion is not subjected to overtime premiums.

Note: Abatement/Removal of Asbestos containing roofs and roofing material is classified as Roofer.

SUPPLEMENTAL BENEFITS
Per Hour: $ 31.87

OVERTIME PAY
See (B, H) on OVERTIME PAGE
Note: An observed holiday that falls on a Sunday will be observed the following Monday.

HOLIDAY
Overtime: See (5, 6) on HOLIDAY PAGE

REGISTERED APPRENTICES
(1) year term apprentices indentured prior to 01/01/2023

1st	2nd	3rd	4th
$ 16.97	$ 24.25 + 3.50*	$ 29.10 + 4.20*	$ 36.37 + 5.26*

Supplements:

1st	2nd	3rd	4th
$ 4.10	$ 16.17	$ 19.31	$ 24.02

* This portion is not subjected to overtime premiums.

(1) year term apprentices indentured after 01/01/2023

1st	2nd	3rd	4th	5th
$ 18.43	$ 21.82	$ 24.25	$ 29.10	$ 36.37
	+ 3.16*	+ 3.50*	+ 4.20*	+ 5.26

Supplements:

1st	2nd	3rd	4th	5th
$ 7.73	$ 14.59	$ 16.17	$ 19.31	$ 24.02

* This portion is not subjected to overtime premiums.

9-8R

Sheetmetal Worker 02/01/2025

JOB DESCRIPTION Sheetmetal Worker **DISTRICT** 8

ENTIRE COUNTIES
Dutchess, Orange, Putnam, Rockland, Sullivan, Ulster, Westchester

WAGES

	07/01/2024
SheetMetal Worker	$ 49.51
	+ 3.71*

*This portion of the benefit is NOT subject to the SAME PREMIUM as shown for overtime.

SHIFT WORK
For all NYS D.O.T. and other Governmental mandated off-shift work:
10% increase for additional shifts for a minimum of five (5) days

SUPPLEMENTAL BENEFITS
Journeyworker $ 46.20

OVERTIME PAY
OVERTIME:.. See (B, E, Q,) on OVERTIME PAGE.

HOLIDAY
Paid: See (1) on HOLIDAY PAGE
Overtime: See (5, 6, 8, 15, 16, 23) on HOLIDAY PAGE

REGISTERED APPRENTICES

1st	2nd	3rd	4th	5th	6th	7th	8th
$ 20.20	$ 20.81	$ 23.12	$ 25.42	$ 27.74	$ 30.08	$ 32.86	$ 35.63
+ 1.48*	+ 1.67*	+ 1.86*	+ 2.04*	+ 2.23*	+ 2.41*	+ 2.60*	+ 2.78*

*This portion of the benefit is NOT subject to the SAME PREMIUM as shown for overtime.

Supplemental Benefits per hour:

Apprentices	
1st term	$ 18.07
2nd term	22.24
3rd term	24.71
4th term	27.21
5th term	29.67
6th term	32.12
7th term	34.12
8th term	36.15

8-38

Sheetmetal Worker 02/01/2025

JOB DESCRIPTION Sheetmetal Worker **DISTRICT** 4

ENTIRE COUNTIES
Bronx, Kings, Nassau, New York, Queens, Richmond, Rockland, Suffolk, Westchester

WAGES
Per Hour:

	07/01/2024	08/01/2024

Sign Erector	$ 58.00	$ 60.00

NOTE: Structurally Supported Overhead Highway Signs(See STRUCTURAL IRON WORKER CLASS)

SUPPLEMENTAL BENEFITS

Per Hour:	07/01/2024	08/01/2024
Sign Erector	$ 57.12	$ 58.31

OVERTIME PAY
See (B, F, S) on OVERTIME PAGE

HOLIDAY
Paid: See (5, 6, 10, 11, 12, 16, 25) on HOLIDAY PAGE
Overtime: See (5, 6, 10, 11, 12, 16, 25) on HOLIDAY PAGE

REGISTERED APPRENTICES
Per Hour:
6 month Terms at the following percentage of Sign Erectors wage rate:

1st	2nd	3rd	4th	5th	6th	7th	8th	9th	10th
35%	40%	45%	50%	55%	60%	65%	70%	75%	80%

SUPPLEMENTAL BENEFITS
Per Hour:

	1st	2nd	3rd	4th	5th	6th	7th	8th	9th	10th
07/01/2024	$ 18.27	$ 20.75	$ 25.22	$ 25.70	$ 34.66	$ 37.74	$ 41.65	$ 44.78	$ 47.93	$ 51.04
08/01/2024	$ 18.65	$ 21.16	$ 23.69	$ 26.22	$35.39	$ 38.52	$ 42.55	$ 45.75	$ 48.96	$ 52.15

4-137-SE

Sprinkler Fitter 02/01/2025

JOB DESCRIPTION Sprinkler Fitter **DISTRICT** 1

ENTIRE COUNTIES
Dutchess, Orange, Putnam, Rockland, Sullivan, Ulster, Westchester

WAGES

Per hour	07/01/2024
Sprinkler Fitter	$ 53.34

SUPPLEMENTAL BENEFITS
Per hour

Journeyworker	$ 30.77

OVERTIME PAY
See (B, E, Q) on OVERTIME PAGE

HOLIDAY
Paid: See (1) on HOLIDAY PAGE
Overtime: See (5, 6) on HOLIDAY PAGE
Note: When a holiday falls on Sunday, the following Monday shall be considered a holiday and all work performed on either day shall be at the double time rate. When a holiday falls on Saturday, the preceding Friday shall be considered a holiday and all work performed on either day shall be at the double time rate.

REGISTERED APPRENTICES
Wages per hour

One Half Year terms at the following wage.

1st	2nd	3rd	4th	5th	6th	7th	8th	9th	10th
$ 25.89	$ 28.77	$ 31.39	$ 34.27	$ 37.14	$ 40.02	$ 42.90	$ 45.77	$ 48.65	$ 51.53

Supplemental Benefits per hour

1st	2nd	3rd	4th	5th	6th	7th	8th	9th	10th
$ 9.18	$ 9.18	$ 20.90	$ 20.90	$ 21.15	$ 21.15	$ 21.15	$ 21.15	$ 21.15	$ 21.15

1-669.2

Teamster - Building / Heavy&Highway 02/01/2025

JOB DESCRIPTION Teamster - Building / Heavy&Highway **DISTRICT** 11

ENTIRE COUNTIES
Dutchess, Orange, Rockland, Sullivan, Ulster

WAGES
GROUP 1: LeTourneau Tractors, Double Barrel Euclids, Athney Wagons and similar equipment (except when hooked to scrapers), I-Beam and Pole Trailers, Tire Trucks, Tractor and Trailers with 5 axles and over, Articulated Back Dumps and Road Oil Distributors, Articulated Water Trucks and Fuel Trucks/Trailers, positions requiring a HAZMAT CDL endorsement.

GROUP 1A: Drivers on detachable Gooseneck Low Bed Trailers rated over 35 tons.

GROUP 2: All equipment 25 yards and up to and including 30-yard bodies and cable Dump Trailers and Powder and Dynamite Trucks.

GROUP 3: All Equipment up to and including 24-yard bodies, Mixer Trucks, Dump Crete Trucks and similar types of equipment, Fuel Trucks, Batch Trucks and all other Tractor Trailers, Hi-Rail Truck.

GROUP 4: Tri-Axles, Ten Wheelers, Grease Trucks, Tillerman, Pattern Trucks, Attenuator Trucks, Water Trucks, Bus.

GROUP 5: Straight Trucks.

GROUP 6: Pick-up Trucks for hauling materials and parts, and Escort Man over-the-road.

WAGES: (per hour)	07/01/2024
GROUP 1	$ 34.58
GROUP 1A	35.72
GROUP 2	34.02
GROUP 3	33.80
GROUP 4	33.69
GROUP 5	33.57
GROUP 6	33.57

NOTE ADDITIONAL PREMIUMS:

- Employees engaged in hazardous/toxic waste removal, on a State or Federally designated hazardous/toxic waste site, where the employee comes in contact with hazardous/toxic waste material and when personal protective equipment is required for respiratory, skin, or eye protection, the employee shall receive an additional 20% premium above the hourly wage.

SHIFT WORK
- On projects requiring an irregular shift a premium of 10% will be paid on wages. The premium will be paid for off-shift or irregular shift work when mandated by Governmental Agency.

SUPPLEMENTAL BENEFITS
Per hour:

First 40 hours	$ 44.59
Over 40 hours	36.99

OVERTIME PAY
See (*B, E, **E2, ***P, X) on OVERTIME PAGE
*Holidays worked Monday through Friday receive Double Time (2x) after 8 hours.
**Makeup day limited to the employees who were working on the site that week.
***Sunday Holidays are paid at a rate of double time and one half (2.5x) for all hours worked.

HOLIDAY
Paid: See (5, 6, 15, 25) on HOLIDAY PAGE
Overtime: See (*1) on HOLIDAY PAGE
- Any employee working two (2) days in any calendar week during which a holiday occurs shall receive a days pay for each holiday occurring during said week. This provision shall also apply if a holiday falls on a Saturday or Sunday.
*See OVERTIME PAY section for when additional premium is applicable on Holiday hours worked.

11-445B/HH

Teamster - Delivery - Building / Heavy&Highway 02/01/2025

JOB DESCRIPTION Teamster - Delivery - Building / Heavy&Highway **DISTRICT** 11

ENTIRE COUNTIES
Dutchess, Orange, Rockland, Sullivan, Ulster

WAGES

Group 1 Tractor Trailer Drivers
Group 2 Tri- Axle

Wages:	07/01/2024
Group 1	$ 33.70
Group 2	29.70

Hazardous/Toxic Waste Removal additional 20% when personal protective equipment is required.

SUPPLEMENTAL BENEFITS

Per hour paid:

First 40 hours	$ 32.30
Over 40 hours	0.00

OVERTIME PAY

See (B, E, Q, X) on OVERTIME PAGE

HOLIDAY

Paid: See (5, 13, 15, 16, 20, 22, 25, 26) on HOLIDAY PAGE
Overtime: See (5, 13, 15, 16, 20, 22, 25, 26) on HOLIDAY PAGE

- Employee must work either the scheduled day of work before or the scheduled day of work after the holiday in the workweek.
- Any employee working one (1) day in the calendar week during which a holiday occurs shall receive a day's pay for each holiday occurring during said week. This provision shall also apply if a holiday falls on a Saturday.
- When any of the recognized holidays occur on Sunday and are celebrated any day before or after the holiday Sunday, such days shall be considered as the holiday and paid for as such.

11-445 B/HH Delivery

Welder 02/01/2025

JOB DESCRIPTION Welder **DISTRICT** 1

ENTIRE COUNTIES

Albany, Allegany, Bronx, Broome, Cattaraugus, Cayuga, Chautauqua, Chemung, Chenango, Clinton, Columbia, Cortland, Delaware, Dutchess, Erie, Essex, Franklin, Fulton, Genesee, Greene, Hamilton, Herkimer, Jefferson, Kings, Lewis, Livingston, Madison, Monroe, Montgomery, Nassau, New York, Niagara, Oneida, Onondaga, Ontario, Orange, Orleans, Oswego, Otsego, Putnam, Queens, Rensselaer, Richmond, Rockland, Saratoga, Schenectady, Schoharie, Schuyler, Seneca, St. Lawrence, Steuben, Suffolk, Sullivan, Tioga, Tompkins, Ulster, Warren, Washington, Wayne, Westchester, Wyoming, Yates

WAGES

Per hour 07/01/2024

Welder: To be paid the same rate of the mechanic performing the work.*

*EXCEPTION: If a specific welder certification is required, then the 'Certified Welder' rate in that trade tag will be paid.

OVERTIME PAY

HOLIDAY

1-As Per Trade

Overtime Codes

Following is an explanation of the code(s) listed in the OVERTIME section of each classification contained in the attached schedule. Additional requirements may also be listed in the HOLIDAY section.

NOTE: Supplemental Benefits are 'Per hour worked' (for each hour worked) unless otherwise noted

(AA)	Time and one half of the hourly rate after 7 and one half hours per day
(A)	Time and one half of the hourly rate after 7 hours per day
(B)	Time and one half of the hourly rate after 8 hours per day
(B1)	Time and one half of the hourly rate for the 9th & 10th hours week days and the 1st 8 hours on Saturday. Double the hourly rate for all additional hours
(B2)	Time and one half of the hourly rate after 40 hours per week
(B3)	Time and one half of the hourly rate after 40 straight hours per week
(C)	Double the hourly rate after 7 hours per day
(C1)	Double the hourly rate after 7 and one half hours per day
(D)	Double the hourly rate after 8 hours per day
(D1)	Double the hourly rate after 9 hours per day
(E)	Time and one half of the hourly rate on Saturday
(E1)	Time and one half 1st 4 hours on Saturday; Double the hourly rate all additional Saturday hours
(E2)	Saturday may be used as a make-up day at straight time when a day is lost during that week due to inclement weather
(E3)	Between November 1st and March 3rd Saturday may be used as a make-up day at straight time when a day is lost during that week due to inclement weather, provided a given employee has worked between 16 and 32 hours that week
(E4)	Saturday and Sunday may be used as a make-up day at straight time when a day is lost during that week due to inclement weather
(E5)	Double time after 8 hours on Saturdays
(F)	Time and one half of the hourly rate on Saturday and Sunday
(G)	Time and one half of the hourly rate on Saturday and Holidays
(H)	Time and one half of the hourly rate on Saturday, Sunday, and Holidays
(I)	Time and one half of the hourly rate on Sunday
(J)	Time and one half of the hourly rate on Sunday and Holidays
(K)	Time and one half of the hourly rate on Holidays
(L)	Double the hourly rate on Saturday
(M)	Double the hourly rate on Saturday and Sunday
(N)	Double the hourly rate on Saturday and Holidays
(O)	Double the hourly rate on Saturday, Sunday, and Holidays
(P)	Double the hourly rate on Sunday
(Q)	Double the hourly rate on Sunday and Holidays
(R)	Double the hourly rate on Holidays

(S) Two and one half times the hourly rate for Holidays

(S1) Two and one half times the hourly rate the first 8 hours on Sunday or Holidays One and one half times the hourly rate all additional hours.

(T) Triple the hourly rate for Holidays

(U) Four times the hourly rate for Holidays

(V) Including benefits at SAME PREMIUM as shown for overtime

(W) Time and one half for benefits on all overtime hours.

(X) Benefits payable on Paid Holiday at straight time. If worked, additional benefit amount will be required for worked hours. (Refer to other codes listed.)

Holiday Codes

PAID Holidays:

Paid Holidays are days for which an eligible employee receives a regular day's pay, but is not required to perform work. If an employee works on a day listed as a paid holiday, this remuneration is in addition to payment of the required prevailing rate for the work actually performed.

OVERTIME Holiday Pay:

Overtime holiday pay is the premium pay that is required for work performed on specified holidays. It is only required where the employee actually performs work on such holidays. The applicable holidays are listed under HOLIDAYS: OVERTIME. The required rate of pay for these covered holidays can be found in the OVERTIME PAY section listings for each classification.

Following is an explanation of the code(s) listed in the HOLIDAY section of each classification contained in the attached schedule. The Holidays as listed below are to be paid at the wage rates at which the employee is normally classified.

(1)	None
(2)	Labor Day
(3)	Memorial Day and Labor Day
(4)	Memorial Day and July 4th
(5)	Memorial Day, July 4th, and Labor Day
(6)	New Year's, Thanksgiving, and Christmas
(7)	Lincoln's Birthday, Washington's Birthday, and Veterans Day
(8)	Good Friday
(9)	Lincoln's Birthday
(10)	Washington's Birthday
(11)	Columbus Day
(12)	Election Day
(13)	Presidential Election Day
(14)	1/2 Day on Presidential Election Day
(15)	Veterans Day
(16)	Day after Thanksgiving
(17)	July 4th
(18)	1/2 Day before Christmas
(19)	1/2 Day before New Years
(20)	Thanksgiving
(21)	New Year's Day
(22)	Christmas
(23)	Day before Christmas
(24)	Day before New Year's
(25)	Presidents' Day
(26)	Martin Luther King, Jr. Day
(27)	Memorial Day
(28)	Easter Sunday

(29) Juneteenth

New York State Department of Labor - Bureau of Public Work
State Office Building Campus
Building 12 - Room 130
Albany, New York 12226

REQUEST FOR WAGE AND SUPPLEMENT INFORMATION

As Required by Articles 8 and 9 of the NYS Labor Law

Fax (518) 485-1870 or mail this form for new schedules or for determination for additional occupations.

This Form Must Be Typed

Submitted By: (Check Only One) ☐ Contracting Agency ☐ Architect or Engineering Firm ☐ Public Work District Office Date:

A. Public Work Contract to be let by: (Enter Data Pertaining to Contracting/Public Agency)

1. Name and complete address ☐ (Check if new or change)

Telephone Fax

E-Mail:

2. NY State Units (see Item 5).

- ☐ 01 DOT
- ☐ 02 OGS
- ☐ 03 Dormitory Authority
- ☐ 04 State University Construction Fund
- ☐ 05 Mental Hygiene Facilities Corp.
- ☐ 06 OTHER N.Y. STATE UNIT
- ☐ 07 City
- ☐ 08 Local School District
- ☐ 09 Special Local District, i.e., Fire, Sewer, Water District
- ☐ 1O Village
- ☐ 11 Town
- ☐ 12 County
- ☐ 13 Other Non-N.Y. State (Describe)

3. SEND REPLY TO ☐ (check if new or change)
Name and complete address:

Telephone Fax

E-Mail:

4. SERVICE REQUIRED. Check appropriate box and provide project information.

☐ New Schedule of Wages and Supplements.

APPROXIMATE BID DATE :

☐ Additional Occupation and/or Redetermination

PRC NUMBER ISSUED PREVIOUSLY FOR THIS PROJECT :

OFFICE USE ONLY

B. PROJECT PARTICULARS

5. Project Title _____

Description of Work _____

Contract Identification Number _____

Note: For NYS units, the OSC Contract No. _____

6. Location of Project:
Location on Site _____

Route No/Street Address _____

Village or City _____

Town _____

County _____

7. Nature of Project - Check One:

- ☐ 1. New Building
- ☐ 2. Addition to Existing Structure
- ☐ 3. Heavy and Highway Construction (New and Repair)
- ☐ 4. New Sewer or Waterline
- ☐ 5. Other New Construction (Explain)
- ☐ 6. Other Reconstruction, Maintenance, Repair or Alteration
- ☐ 7. Demolition
- ☐ 8. Building Service Contract

8. OCCUPATION FOR PROJECT :

- ☐ Construction (Building, Heavy Highway/Sewer/Water)
- ☐ Tunnel
- ☐ Residential
- ☐ Landscape Maintenance
- ☐ Elevator maintenance
- ☐ Exterminators, Fumigators
- ☐ Fire Safety Director, NYC Only
- ☐ Fuel Delivery
- ☐ Guards, Watchmen
- ☐ Janitors, Porters, Cleaners, Elevator Operators
- ☐ Moving furniture and equipment
- ☐ Trash and refuse removal
- ☐ Window cleaners
- ☐ Other (Describe)

9. Does this project comply with the Wicks Law involving separate bidding? YES ☐ NO ☐

10. Name and Title of Requester

Signature

SEE PAGE TWO FOR LAWS RELATING TO PUBLIC WORK CONTRACTS

NEW YORK STATE DEPARTMENT OF LABOR
Bureau of Public Work - Debarment List

LIST OF EMPLOYERS INELIGIBLE TO BID ON OR BE AWARDED ANY PUBLIC WORK CONTRACT

Under Article 8 and Article 9 of the NYS Labor Law, a contractor, sub-contractor and/or its successor shall be debarred and ineligible to submit a bid on or be awarded any public work or public building service contract/sub-contract with the state, any municipal corporation or public body for a period of five (5) years from the date of debarment when:

- Two (2) final determinations have been rendered within any consecutive six-year (6) period determining that such contractor, sub-contractor and/or its successor has WILLFULLY failed to pay the prevailing wage and/or supplements;
- One (1) final determination involves falsification of payroll records or the kickback of wages and/or supplements.

The agency issuing the determination and providing the information, is denoted under the heading 'Fiscal Officer'. DOL = New York State Department of Labor; NYC = New York City Comptroller's Office; AG = New York State Attorney General's Office; DA = County District Attorney's Office.

Debarment Database: To search for contractors, sub-contractors and/or their successors debarred from bidding or being awarded any public work contract or subcontract under NYS Labor Law Articles 8 and 9, or under NYS Workers' Compensation Law Section 141-b, access the database at this link: https://apps.labor.ny.gov/EDList/searchPage.do

For inquiries please call 518-457-5589.

NYSDOL Bureau of Public Work Debarment List 01/31/2025

Article 8

AGENCY	Fiscal Officer	FEIN	EMPLOYER NAME	EMPLOYER DBA NAME	ADDRESS	DEBARMENT START DATE	DEBARMENT END DATE
DOL	DOL	*****5754	0369 CONTRACTORS, LLC		515 WEST AVE UNIT PH 13NORWALK CT 06850	05/12/2021	05/12/2026
DOL	DOL	*****5784	A.J.M. TRUCKING, INC.		PO BOX 2064 MONROE NY 10950	02/12/2024	02/12/2029
DOL	DOL		AKHLAQ OULAKH		4307 28TH AVE ASTORIA NY 11103	10/11/2024	10/11/2029
DOL	NYC		ALL COUNTY SEWER & DRAIN, INC.		7 GREENFIELD DR WARWICK NY 10990	03/25/2022	03/25/2027
DOL	DOL	*****8387	AMERICAN PAVING & MASONRY, CORP.		8 FOREST AVE GLEN COVE NY 11542	05/24/2024	05/24/2029
DOL	DOL	*****8654	AMERICAN PAVING, INC.		8 FORREST AVE. GLEN COVE NY 11542	05/24/2024	05/24/2029
DOL	NYC		AMJED PARVEZ		401 HANOVER AVENUE STATEN ISLAND NY 10304	01/11/2021	01/11/2026
DOL	DOL		ANGELO F COKER		2610 SOUTH SALINA STREET SUITE 14SYRACUSE NY 13205	09/17/2020	09/17/2025
DOL	DOL		ANGELO GARCIA		515 WEST AVE UNIT PH 13NORWALK CT 06850	05/12/2021	05/12/2026
DOL	DOL		ANGELO STANCO		8 FOREST AVE. GLEN COVE NY 11542	05/24/2024	05/24/2029
DOL	DOL		ANGELO TONDO		449 WEST MOMBSHA ROAD MONROE NY 10950	06/06/2022	06/06/2027
DOL	DOL	*****4231	ANKER'S ELECTRIC SERVICE, INC.		10 SOUTH 5TH ST LOCUST VALLEY NY 11560	09/26/2022	09/26/2027
DOL	DOL		ANTHONY MONGELLI		PO BOX 2064 MONROE NY 10950	02/12/2024	02/12/2029
DOL	NYC		ARADCO CONSTRUCTION CORP		115-46 132RD ST SOUTH OZONE PARK NY 11420	09/17/2020	09/17/2025
DOL	DOL		ARNOLD A. PAOLINI		1250 BROADWAY ST BUFFALO NY 14212	02/03/2020	02/03/2025
DOL	NYC		AVM CONSTRUCTION CORP		117-72 123RD ST SOUTH OZONE PARK NY 11420	09/17/2020	09/17/2025
DOL	NYC		AZIDABEGUM		524 MCDONALD AVENUE BROOKLYN NY 11218	09/17/2020	09/17/2025
DOL	DOL	*****8421	B & B DRYWALL, INC		206 WARREN AVE APT 1WHITE PLAINS NY 10603	12/14/2021	12/14/2026
DOL	DOL		B&L RENOVATION CO.		618 OCEAN PARKWAY APT A6BROOKLYN NY 11230	09/17/2020	09/17/2025
DOL	NYC	*****2113	BHW CONTRACTING, INC.		401 HANOVER AVENUE STATEN ISLAND NY 10304	01/11/2021	01/11/2026
DOL	DOL	*****5078	BLACK RIVER TREE REMOVAL, LLC		29807 ANDREWS ROAD BLACK RIVER NY 13032	10/17/2023	10/17/2028
DOL	DOL		BRADLEY J SCHUKA		4 BROTHERS ROAD WAPPINGERS FALLS NY 12590	10/20/2020	10/20/2025
DOL	DOL	*****9383	C.C. PAVING AND EXCAVATING, INC.		2610 SOUTH SALINA ST SUITE 12SYRACUSE NY 13205	09/17/2020	09/17/2025
DOL	DOL	*****4083	C.P.D. ENTERPRISES, INC		P.O BOX 281 WALDEN NY 12586	03/03/2020	03/03/2025
DOL	DOL	*****5161	CALADRI DEVELOPMENT CORP.		1223 PARK ST. PEEKSKILL NY 10566	05/17/2021	05/17/2026
DOL	DOL	*****3391	CALI ENTERPRISES, INC.		1223 PARK STREET PEEKSKILL NY 10566	05/17/2021	05/17/2026
DOL	DOL	*****4155	CASA BUILDERS, INC.	FRIEDLANDER CONSTRUCTI ON	64 N PUTT CONNERS ROAD NEW PALTZ NY 12561	05/10/2023	05/10/2028
DOL	AG	*****7247	CENTURY CONCRETE CORP		2375 RAYNOR ST RONKONKOMA NY 11779	08/04/2021	08/04/2026
DOL	DOL	*****0026	CHANTICLEER CONSTRUCTION LLC		4 BROTHERS ROAD WAPPINGERS FALLS NY 12590	10/20/2020	10/20/2025
DOL	NYC	*****2117	CHARAN ELECTRICAL ENTERPRISES		9-11 40TH AVENUE LONG ISLAND CITY NY 11101	09/26/2023	09/26/2028
DOL	NYC		CHARLES ZAHRADKA		863 WASHINGTON STREET FRANKLIN SQUARE NY 11010	03/10/2020	03/10/2025
DOL	DOL		CHRISTOPHER GRECO		26 NORTH MYRTLE AVENUE SPRING VALLEY NY 10956	02/18/2021	02/18/2026
DOL	DOL	*****2281	CORRAO TRUCKING, INC.		PO BOX 393 NANUET NY 10954	09/17/2024	09/17/2029
DOL	DOL		CRAIG JOHANSEN		10 SOUTH 5TH ST LOCUST VALLEY NY 11560	09/26/2022	09/26/2027

DOL	DOL	*****3228	CROSS-COUNTY LANDSCAPING AND TREE SERVICE, INC.	ROCKLAND TREE SERVICE	26 NORTH MYRTLE AVENUE SPRING VALLEY NY 10956	02/18/2021	02/18/2026
DOL	DOL	*****7619	DANCO CONSTRUCTION UNLIMITED INC.		485 RAFT AVENUE HOLBROOK NY 11741	10/19/2021	10/19/2026
DOL	DOL		DANIEL ROBERT MCNALLY		7 GREENFIELD DRIVE WARWICK NY 10990	03/25/2022	03/25/2027
DOL	DOL		DARIAN L COKER		2610 SOUTH SALINA ST SUITE 2CSYRACUSE NY 13205	09/17/2020	09/17/2025
DOL	DOL		DARWIN PEGUESE		6400 BALTIMORE NATIONAL SUITE 602CANTONSVILLE NY 21228	10/24/2024	10/24/2029
DOL	DOL		DAVID FRIEDLANDER		64 NORTH PUTT CORNERS RD NEW PALTZ NY 12561	05/10/2023	05/10/2028
DOL	DOL		DINA TAYLOR		64 N PUTT CONNERS RD NEW PALTZ NY 12561	05/10/2023	05/10/2028
DOL	DOL	*****5175	EAGLE MECHANICAL AND GENERAL CONSTRUCTION LLC		11371 RIDGE RD WOLCOTT NY 14590	02/03/2020	02/03/2025
DOL	AG		EDWIN HUTZLER		23 NORTH HOWELLS RD BELLPORT NY 11713	08/04/2021	08/04/2026
DOL	DA		EDWIN HUTZLER		2375 RAYNOR STREET RONKONKOMA NY 11779	08/04/2021	08/04/2026
DOL	DOL	*****0780	EMES HEATING & PLUMBING CONTR		5 EMES LANE MONSEY NY 10952	01/20/2002	01/20/3002
DOL	DOL		EMIL KISZKO		84 DIAMOND ST BROOKLYN NY 11222	07/18/2024	07/18/2029
DOL	DOL	*****3298	EMJACK CONSTRUCTION CORP.		84 DIAMOND ST BROOKLYN NY 11222	07/18/2024	07/18/2029
DOL	DOL	*****3298	EMJACK CONSTRUCTION LLC		4192 SIR ANDREW CIRCLE DOYLESTOWN PA 18902	07/18/2024	07/18/2029
DOL	DOL		EUGENIUSZ "GINO" KUCHAR		195 KINGSLAND AVE BROOKLYN NY 11222	12/22/2023	12/22/2028
DOL	DA		FREDERICK HUTZLER		2375 RAYNOR STREET RONKONKOMA NY 11779	08/04/2021	08/04/2026
DOL	DOL	*****2998	G.E.M. AMERICAN CONSTRUCTION CORP.		195 KINGSLAND AVE BROOKLYN NY 11222	12/22/2023	12/22/2028
DOL	NYC		GAYATRI MANGRU		21 DAREWOOD LANE VALLEY STREAM NY 11581	09/17/2020	09/17/2025
DOL	DA		GEORGE LUCEY		150 KINGS STREET BROOKLYN NY 11231	01/19/1998	01/19/2998
DOL	DA		GIOVANNA TRAVALJA		3735 9TH ST LONG ISLAND CITY NY 11101	01/05/2023	01/05/2028
DOL	DA		GIOVANNI NAPOLITANO		2501 BAYVIEW AVENUE WANTAGH NY 11793	02/21/2024	02/21/2029
DOL	DA	*****0213	GORILLA CONTRACTING GROUP, LLC		505 MANHATTAN AVE WEST BABYLON NY 11704	10/05/2023	10/05/2028
DOL	DA	*****4760	GTX CONSTRUCTION ASSOCIATES, CORP		2501 BAYVIEW AVE WANTAGH NY 11793	02/21/2024	02/21/2029
DOL	DOL		HANS RATH		24 ELDOR AVENUE NEW CITY NY 10956	02/03/2020	02/03/2025
DOL	DOL		HERBERT CLEMEN		42 FOWLER AVENUE CORTLAND MANOR NY 10567	01/24/2023	01/24/2028
DOL	DOL		HERBERT CLEMEN		42 FOWLER AVENUE CORTLAND MANOR NY 10567	10/25/2022	10/25/2027
DOL	DOL	*****2397	ISLAND BREEZE MARINE, INC.		6400 BALTIMORE NATIONAL CANTONSVILLE MD 21228	10/24/2024	10/24/2029
DOL	DOL	*****9211	J. WASE CONSTRUCTION CORP.		8545 RT 9W ATHENS NY 12015	03/09/2021	03/09/2026
DOL	DOL		J.M.J CONSTRUCTION		151 OSTRANDER AVENUE SYRACUSE NY 13205	11/21/2022	11/21/2027
DOL	DOL		J.R. NELSON CONSTRUCTION		531 THIRD STREET ALBANY NY 12206	11/07/2023	11/07/2028
DOL	DOL		J.R. NELSON CONSTRUCTION		531 THIRD STREET ALBANY NY 12206	12/22/2022	12/22/2027
DOL	DOL		J.R. NELSON CONSTRUCTION		531 THIRD STREET ALBANY NY 12206	10/25/2022	10/25/2027
DOL	DOL		J.R. NELSON, LLC		531 THIRD STREET ALBANY NY 12206	12/22/2022	12/22/2027
DOL	DOL		J.R. NELSON, LLC		531 THIRD STREET ALBANY NY 12206	11/07/2023	11/07/2028
DOL	DOL		J.R. NELSON, LLC		531 THIRD STREET ALBANY NY 12206	10/25/2022	10/25/2027
DOL	DOL		J.R.N COMPANIES, LLC		531 THIRD STREET ALBANY NY 12206	12/12/2022	12/12/2027

DOL	DOL		J.R.N COMPANIES, LLC		531 THIRD STREET ALBANY NY 12206	11/07/2023	11/07/2028
DOL	DOL		J.R.N COMPANIES, LLC		531 THIRD STREET ALBANY NY 12206	10/25/2022	10/25/2027
DOL	DOL	*****1147	J.R.N. CONSTRUCTION, LLC		531 THIRD ST ALBANY NY 12206	11/07/2023	11/07/2028
DOL	DOL	*****1147	J.R.N. CONSTRUCTION, LLC		531 THIRD ST ALBANY NY 12206	12/22/2022	12/22/2027
DOL	DOL	*****1147	J.R.N. CONSTRUCTION, LLC		531 THIRD ST ALBANY NY 12206	10/25/2022	10/25/2027
DOL	DOL		JAMES J. BAKER		7901 GEE ROAD CANASTOTA NY 13032	08/17/2021	08/17/2026
DOL	DOL		JASON P. RACE		3469 STATE RT. 69 PERISH NY 13131	09/29/2021	09/29/2026
DOL	DOL		JASON P. RACE		3469 STATE RT. 69 PERISH NY 13131	02/09/2022	02/09/2027
DOL	DOL		JASON P. RACE		3469 STATE RT. 69 PERISH NY 13131	11/15/2022	11/15/2027
DOL	DOL		JASON P. RACE		3469 STATE RT. 69 PERISH NY 13131	03/01/2022	03/01/2027
DOL	DOL	*****7993	JBS DIRT, INC.		7901 GEE ROAD CANASTOTA NY 13032	08/17/2021	08/17/2026
DOL	DOL	*****2435	JEFFEL D. JOHNSON	JMJ7 AND SON	5553 CAIRNSTRAIL CLAY NY 13041	11/21/2022	11/21/2027
DOL	DOL		JEFFEL JOHNSON ELITE CARPENTER REMODEL AND CONSTRUCTION		C2 EVERGREEN CIRCLE LIVERPOOL NY 13090	11/21/2022	11/21/2027
DOL	DOL	*****2435	JEFFREY M. JOHNSON	JMJ7 AND SON	5553 CAIRNS TRAIL CLAY NY 13041	11/21/2022	11/21/2027
DOL	DOL		JIM PLAUGHER		17613 SANTE FE LINE ROAD WAYNEFIELD OH 45896	07/16/2021	07/16/2026
DOL	DOL		JMJ7 & SON CONSTRUCTION, LLC		5553 CAIRNS TRAIL LIVERPOOL NY 13041	11/21/2022	11/21/2027
DOL	DOL		JMJ7 AND SONS CONTRACTORS		5553 CAIRNS TRAIL CLAY NY 13041	11/21/2022	11/21/2027
DOL	DOL		JMJ7 CONTRACTORS		7014 13TH AVENUE BROOKLYN NY 11228	11/21/2022	11/21/2027
DOL	DOL		JMJ7 CONTRACTORS AND SONS		5553 CAIRNS TRAIL CLAY NY 13041	11/21/2022	11/21/2027
DOL	DOL		JMJ7 CONTRACTORS, LLC		5553 CAIRNS TRAIL CLAY NY 13041	11/21/2022	11/21/2027
DOL	DOL		JOHN MARKOVIC		47 MANDON TERRACE HAWTHORN NJ 07506	03/29/2021	03/29/2026
DOL	DOL		JOHN WASE		8545 RT 9W ATHENS NY 12015	03/09/2021	03/09/2026
DOL	DOL		JORGE RAMOS		8970 MIKE GARCIA DR MANASSAS VA 20109	07/16/2021	07/16/2026
DOL	DOL		JOSEPH K. SALERNO		1010 TILDEN AVE UTICA NY 13501	07/24/2023	07/24/2028
DOL	DOL		JOSEPH K. SALERNO II		1010 TILDEN AVE UTICA NY 13501	07/24/2023	07/24/2028
DOL	DOL	*****5116	JP RACE PAINTING, INC. T/A RACE PAINTING		3469 STATE RT. 69 PERISH NY 13131	02/09/2022	02/09/2027
DOL	DOL	*****5116	JP RACE PAINTING, INC. T/A RACE PAINTING		3469 STATE RT. 69 PERISH NY 13131	11/15/2022	11/15/2027
DOL	DOL	*****5116	JP RACE PAINTING, INC. T/A RACE PAINTING		3469 STATE RT. 69 PERISH NY 13131	09/29/2021	09/29/2026
DOL	DOL	*****5116	JP RACE PAINTING, INC. T/A RACE PAINTING		3469 STATE RT. 69 PERISH NY 13131	03/01/2022	03/01/2027
DOL	DOL	*****5116	JP RACE PAINTING, INC. T/A RACE PAINTING		3469 STATE RT. 69 PERISH NY 13131	03/01/2022	03/01/2027
DOL	DOL		JRN CONSTRUCTION CO, LLC		1024 BROADWAY ALBANY NY 12204	11/07/2023	11/07/2028
DOL	DOL	*****1147	JRN CONSTRUCTION, LLC		531 THIRD STREET ALBANY NY 12206	10/25/2022	10/25/2027
DOL	DOL	*****1147	JRN CONSTRUCTION, LLC		531 THIRD STREET ALBANY NY 12206	12/22/2022	12/22/2027
DOL	DOL	*****1147	JRN CONSTRUCTION, LLC		531 THIRD STREET ALBANY NY 12206	11/07/2023	11/07/2028
DOL	DOL		JRN PAVING, LLC		531 THIRD STREET ALBANY NY 12206	10/25/2022	10/25/2027
DOL	DOL		JRN PAVING, LLC		531 THIRD STREET ALBANY NY 12206	12/22/2022	12/22/2027
DOL	DOL		JRN PAVING, LLC		531 THIRD STREET ALBANY NY 12206	11/07/2023	11/07/2028

DOL	DOL		JULIUS AND GITA BEHREND		5 EMES LANE MONSEY NY 10952	11/20/2002	11/20/3002
DOL	DOL		KARIN MANGIN		796 PHELPS ROAD FRANKLIN LAKES NJ 07417	12/01/2020	12/01/2025
DOL	DOL		KATE E. CONNOR		7088 INTERSTATE ISLAND RD SYRACUSE NY 13209	03/31/2021	03/31/2026
DOL	DOL		KEAN INDUSTRIES, LLC		2345 RT. 52 SUITE 2NHOPEWELL JUNCTION NY 12533	12/18/2023	12/18/2028
DOL	DOL	*****2959	KELC DEVELOPMENT, INC		7088 INTERSTATE ISLAND RD SYRACUSE NY 13209	03/31/2021	03/31/2026
DOL	DOL		KIMBERLY F. BAKER		7901 GEE ROAD CANASTOTA NY 13032	08/17/2021	08/17/2026
DOL	DOL		KMA GROUP II, INC.		29-10 38TH AVENUE LONG ISLAND CITY NY 11101	10/11/2023	10/11/2028
DOL	DOL	*****1833	KMA GROUP INC.		29-10 38TH AVENUE LONG ISLAND CITY NY 11101	10/11/2023	10/11/2028
DOL	DOL		KMA INSULATION, INC.		29-10 38TH AVENUE LONG ISLAND CITY NY 11101	10/11/2023	10/11/2028
DOL	DOL		KRIN HEINEMANN		2345 ROUTE 52, SUITE 2N HOPEWELL JUNCTION NY 12533	12/18/2023	12/18/2028
DOL	NYC		KULWANT S. DEOL		9-11 40TH AVENUE LONG ISLAND CITY NY 11101	09/26/2023	09/26/2028
DOL	DA	*****8816	LAKE CONSTRUCTION AND DEVELOPMENT CORPORATION		150 KINGS STREET BROOKLYN NY 11231	08/19/1998	08/19/2998
DOL	DOL		LEROY E. NELSON JR		531 THIRD ST ALBANY NY 12206	10/25/2022	10/25/2027
DOL	DOL		LEROY E. NELSON JR		531 THIRD ST ALBANY NY 12206	12/22/2022	12/22/2027
DOL	DOL		LEROY E. NELSON JR		531 THIRD ST ALBANY NY 12206	11/07/2023	11/07/2028
DOL	AG	*****3291	LINTECH ELECTRIC, INC.		3006 TILDEN AVE BROOKLYN NY 11226	02/16/2022	02/16/2027
DOL	DOL		LOUIS A. CALICCHIA		1223 PARK ST. PEEKSKILL NY 10566	05/17/2021	05/17/2026
DOL	DOL	*****2196	MAINSTREAM SPECIALTIES, INC.		11 OLD TOWN RD SELKIRK NY 12158	02/02/2021	02/02/2026
DOL	DA		MANUEL P TOBIO		150 KINGS STREET BROOKLYN NY 14444	08/19/1998	08/19/2998
DOL	DA		MANUEL TOBIO		150 KINGS STREET BROOKLYN NY 11231	08/19/1998	08/19/2998
DOL	DOL		MAQSOOD AHMAD		618 OCEAN PKWY BROOKLYN NY 11230	09/17/2020	09/17/2025
DOL	NYC		MARIA NUBILE		84-22 GRAND AVENUE ELMHURST NY 11373	03/10/2020	03/10/2025
DOL	DOL	*****1320	MJC MASON CONTRACTING, INC.		42 FOWLER AVENUE CORTLAND MANOR NY 10567	10/25/2022	10/25/2027
DOL	DOL	*****1320	MJC MASON CONTRACTING, INC.		42 FOWLER AVENUE CORTLAND MANOR NY 10567	01/24/2023	01/24/2028
DOL	NYC		MUHAMMED A. HASHEM		524 MCDONALD AVENUE BROOKLYN NY 11218	09/17/2020	09/17/2025
DOL	NYC		NAMOW, INC.		84-22 GRAND AVENUE ELMHURST NY 11373	03/10/2020	03/10/2025
DOL	DOL	*****7790	NATIONAL BUILDING & RESTORATION CORP		1010 TILDEN AVE UTICA NY 13501	07/24/2023	07/24/2028
DOL	DOL	*****1797	NATIONAL CONSTRUCTION SERVICES, INC		1010 TILDEN AVE UTICA NY 13501	07/24/2023	07/24/2028
DOL	NYC		NAVIT SINGH		402 JERICHO TURNPIKE NEW HYDE PARK NY 11040	08/10/2022	08/10/2027
DOL	DOL		NELCO CONTRACTING, LLC		1024 BROADWAY ALBANY NY 12204	11/07/2023	11/07/2028
DOL	DA		NICHOLAS T. ANALITIS		505 MANHATTAN AVE WEST BABYLON NY 11704	10/05/2023	10/05/2028
DOL	DOL		NICHOLE E. FRASER A/K/A NICHOLE RACE		3469 STATE RT. 69 PERISH NY 13131	03/01/2022	03/01/2027
DOL	DOL		NICHOLE E. FRASER A/K/A NICHOLE RACE		3469 STATE RT. 69 PERISH NY 13131	11/15/2022	11/15/2027
DOL	DOL		NICHOLE E. FRASER A/K/A NICHOLE RACE		3469 STATE RT. 69 PERISH NY 13131	09/29/2021	09/29/2026
DOL	DOL		NICHOLE E. FRASER A/K/A NICHOLE RACE		3469 STATE RT. 69 PERISH NY 13131	02/09/2022	02/09/2027

DOL	DOL	*****7429	NICOLAE I. BARBIR	BESTUCCO CONSTRUCTI ON, INC.	444 SCHANTZ ROAD ALLENTOWN PA 18104	09/17/2020	09/17/2025
DOL	NYC	*****5643	NYC LINE CONTRACTORS, INC.		402 JERICHO TURNPIKE NEW HYDE PARK NY 11040	08/10/2022	08/10/2027
DOL	DOL		PATRICK PENNACCHIO		2345 RT. 52 SUITE 2NHOPEWELL JUNCTION NY 12533	12/18/2023	12/18/2028
DOL	DOL		PATRICK PENNACCHIO		2345 RT. 52 SUITE 2NHOPEWELL JUNCTION NY 12533	12/18/2023	12/18/2028
DOL	DOL		PAULINE CHAHALES		935 S LAKE BLVD MAHOPAC NY 10541	03/02/2021	03/02/2026
DOL	DOL		PETER STEVENS		11 OLD TOWN ROAD SELKIRK NY 12158	02/02/2021	02/02/2026
DOL	DOL		PETER STEVENS		8269 21ST ST BELLEROSE NY 11426	12/22/2022	12/22/2027
DOL	DOL	*****4168	PHANTOM CONSTRUCTION CORP.		95-27 116TH STREET QUEENS NY 11419	07/12/2024	07/12/2029
DOL	DOL	*****4168	PHANTOM CONSTRUCTION CORP.		95-27 116TH STREET QUEENS NY 11419	05/28/2024	05/28/2029
DOL	DOL	*****0466	PRECISION BUILT FENCES, INC.		1617 MAIN ST PEEKSKILL NY 10566	03/03/2020	03/03/2025
DOL	NYC		RASHEL CONSTRUCTION CORP		524 MCDONALD AVENUE BROOKLYN NY 11218	09/17/2020	09/17/2025
DOL	DOL	*****1068	RATH MECHANICAL CONTRACTORS, INC.		24 ELDOR AVENUE NEW CITY NY 10956	02/03/2020	02/03/2025
DOL	DOL	*****2633	RAW POWER ELECTRIC CORP.		3 PARK CIRCLE MIDDLETOWN NY 10940	07/11/2022	07/11/2027
DOL	DA	*****7559	REGAL CONTRACTING INC.		24 WOODBINE AVE NORTHPORT NY 11768	10/01/2020	10/01/2025
DOL	DOL		RICHARD REGGIO		1617 MAIN ST PEEKSKILL NY 10566	03/03/2020	03/03/2025
DOL	DOL		ROBBYE BISSESAR		89-51 SPRINGFIELD BLVD QUEENS VILLAGE NY 11427	01/11/2003	01/11/3003
DOL	DOL		ROMEO WARREN		161 ROBYN RD MONROE NY 10950	07/11/2022	07/11/2027
DOL	DOL	*****7172	RZ & AL INC.		198 RIDGE AVENUE VALLEY STREAM NY 11581	06/06/2022	06/06/2027
DOL	DOL		SAL FRESINA MASONRY CONTRACTORS, INC.		1935 TEALL AVENUE SYRACUSE NY 13206	07/16/2021	07/16/2026
DOL	DOL		SAL MASONRY CONTRACTORS, INC.		(SEE COMMENTS) SYRACUSE NY 13202	07/16/2021	07/16/2026
DOL	DOL	*****9874	SALFREE ENTERPRISES INC		P.O BOX 14 2821 GARDNER RDPOMPEI NY 13138	07/16/2021	07/16/2026
DOL	DOL		SALVATORE A FRESINA A/K/A SAM FRESINA		107 FACTORY AVE P.O BOX 11070SYRACUSE NY 13218	07/16/2021	07/16/2026
DOL	DOL		SAM FRESINA		107 FACTORY AVE P.O BOX 11070SYRACUSE NY 13218	07/16/2021	07/16/2026
DOL	DA	*****0476	SAMCO ELECTRIC CORP.		3735 9TH ST LONG ISLAND CITY NY 11101	01/05/2023	01/05/2028
DOL	NYC	*****1130	SCANA CONSTRUCTION CORP.		863 WASHINGTON STREET FRANKLIN SQUARE NY 11010	03/10/2020	03/10/2025
DOL	DOL	*****2045	SCOTT DUFFIE	DUFFIE'S ELECTRIC, INC.	P.O BOX 111 CORNWALL NY 12518	03/03/2020	03/03/2025
DOL	DOL		SCOTT DUFFIE		P.O BOX 111 CORNWALL NY 12518	03/03/2020	03/03/2025
DOL	DA		SILVANO TRAVALJA		3735 9TH ST LONG ISLAND CITY NY 11101	01/05/2023	01/05/2028
DOL	DOL	*****0440	SOLAR GUYS INC.		8970 MIKE GARCIA DR MANASSAS VA 20109	07/16/2021	07/16/2026
DOL	NYC		SOMATIE RAMSUNAHAI		115-46 132ND ST SOUTH OZONE PARK NY 11420	09/17/2020	09/17/2025
DOL	DOL	*****2221	SOUTH BUFFALO ELECTRIC, INC.		1250 BROADWAY ST BUFFALO NY 14212	02/03/2020	02/03/2025
DOL	NYC	*****3661	SPANIER BUILDING MAINTENANCE CORP		200 OAK DRIVE SYOSSET NY 11791	03/14/2022	03/14/2027
DOL	DOL		STANADOS KALOGELAS		485 RAFT AVENUE HOLBROOK NY 11741	10/19/2021	10/19/2026
DOL	DOL	*****3496	STAR INTERNATIONAL INC		89-51 SPRINGFIELD BLVD QUEENS VILLAGE NY 11427	08/11/2003	08/11/3003

DOL	DOL	*****9528	STEEL-IT, LLC.		17613 SANTE FE LINE ROAD WAYNESFIELD OH 45896	07/16/2021	07/16/2026
DOL	DOL	*****3800	SUBURBAN RESTORATION CO. INC.		5-10 BANTA PLACE FAIR LAWN PLACE NJ 07410	03/29/2021	03/29/2026
DOL	DOL	*****9150	SURGE INC.		8269 21ST STREET BELLEROSE NY 11426	12/22/2022	12/22/2027
DOL	DOL		SYED MUHAMMAD S. JAFRI A/K/A SHARRUKH JAFRI		4307 28TH AVE ASTORIA NY 11103	10/11/2024	10/11/2029
DOL	DOL		SYED RAZA		198 RIDGE AVENUE NY 11581	06/06/2022	06/06/2027
DOL	DOL		TARLOK SINGH		95-27 116TH STREET QUEENS NY 11419	05/28/2024	05/28/2029
DOL	DOL		TARLOK SINGH		95-27 116TH STREET QUEENS NY 11419	07/12/2024	07/12/2029
DOL	DOL		TERRY THOMPSON		11371 RIDGE RD WOLCOTT NY 14590	02/03/2020	02/03/2025
DOL	DOL	*****9733	TERSAL CONSTRUCTION SERVICES INC		107 FACTORY AVE P.O BOX 11070SYRACUSE NY 13208	07/16/2021	07/16/2026
DOL	DOL		TERSAL CONTRACTORS, INC.		221 GARDNER RD P.O BOX 14POMPEI NY 13138	07/16/2021	07/16/2026
DOL	DOL		TERSAL DEVELOPMENT CORP.		1935 TEALL AVENUE SYRACUSE NY 13206	07/16/2021	07/16/2026
DOL	DOL	*****5766	THE COKER CORPORATION	COKER CORPORATIO N	2610 SOUTH SALINA ST SUITE 14SYRACUSE NY 13205	09/17/2020	09/17/2025
DOL	DOL	*****2426	THE MATRUKH GROUP, INC.		4307 28TH AVE PO BOX 9082ASTORIA NY 11103	10/11/2024	10/11/2029
DOL	DOL		TIMOTHY PERCY		29807 ANDREWS ROAD BLACK RIVER NY 13612	10/17/2023	10/17/2028
DOL	DA	*****1050	TRI STATE CONSTRUCTION OF NY CORP.		50-39 175TH PLACE FRESH MEADOWS NY 11365	03/28/2022	03/28/2027
DOL	DA	*****4106	TRIPLE H CONCRETE CORP		2375 RAYNOR STREET RONKONKOMA NY 11779	08/04/2021	08/04/2026
DOL	DOL	*****8210	UPSTATE CONCRETE & MASONRY CONTRACTING CO INC		449 WEST MOMBSHA ROAD MONROE NY 10950	06/06/2022	06/06/2027
DOL	DOL	*****6418	VALHALLA CONSTRUCTION, LLC.		796 PHLEPS ROAD FRANKLIN LAKES NJ 07417	12/01/2020	12/01/2025
DOL	NYC	*****2426	VICKRAM MANGRU	VICK CONSTRUCTI ON	21 DAREWOOD LANE VALLEY STREAM NY 11581	09/17/2020	09/17/2025
DOL	NYC		VICKRAM MANGRU		21 DAREWOOD LANE VALLEY STREAM NY 11581	09/17/2020	09/17/2025
DOL	DOL		VIKTORIA RATH		24 ELDOR AVENUE NEW CITY NY 10956	02/03/2020	02/03/2025
DOL	DOL		VINCENT CORRAO		PO BOX 393 NANUET NY 10954	09/17/2024	09/17/2029
DOL	DOL	*****8266	WILLIAM CHRIS MCCLENDON	MCCLENDON ASPHALT PAVING	1646 FALLS STREET NIAGARA FALLS NY 14303	05/01/2023	05/01/2028
DOL	DOL		WILLIAM CHRIS MCCLENDON		1646 FALLS STREET NIAGARA FALLS NY 14303	05/01/2023	05/01/2028
DOL	DOL		WILLIAM G. PROERFRIEDT		85 SPRUCEWOOD ROAD WEST BABYLON NY 11704	01/19/2021	01/19/2026
DOL	DOL	*****5924	WILLIAM G. PROPHY, LLC	WGP CONTRACTIN G, INC.	54 PENTAQUIT AVE BAYSHORE NY 11706	01/19/2021	01/19/2026
DOL	DOL		WILLIAM SCRIVENS		4192 SIR ANDREW CIRCLE DOYELSTOWN PA 18902	07/18/2024	07/18/2029
DOL	DOL		XENOFON EFTHIMIADIS		29-10 38TH AVENUE LONG ISLAND CITY NY 11101	10/11/2023	10/11/2028

APPENDIX G

PROJECT LABOR AGREEMENT (DRAFT)

PROJECT LABOR AGREEMENT

Covering Construction Performed on Behalf of Rockland Green and Rockland County Building & Construction Trades Council

Capital Project

TO COMPLETE ALL ASPECTS OF THE WORK REQUIRED TO BUILD OUT AN IMMERSIVE THEATER & EDUCATIONAL EXHIBITS

DRAFT

TABLE OF CONTENTS

INTRODUCTION **1**
PARTIES TO THE AGREEMENT 1
1.0 GENERAL CONDITIONS **2**
1.1 DEFINITIONS 2
1.2 CONDITIONS FOR AGREEMENT TO BECOME EFFECTIVE 2
1.3 ENTITIES BOUND AND ADMINISTRATION OF AGREEMENT 2
1.4 SUPREMACY CLAUSE 2
1.5 LIABILITY 3
1.6 RCSWMA ROCKLAND GREEEN – CONSTRUCTION REPRESENTATIVE 3
1.7 AVAILABILITY AND APPLICABILITY TO ALL SUCCESSFUL BIDDERS 3
2.0 SCOPE OF THIS AGREEMENT **3**
2.1 THE WORK 3
2.2 TIME LIMITATIONS 4
2.3 EXCLUDED EMPLOYEES 4
2.4 NON-APPLICATION TO CERTAIN ENTITIES 5
3.0 UNION RECOGNITION AND EMPLOYMENT **5**
3.1 PRE-HIRE RECONGNITION 5
3.2 UNION REFERRAL 5
3.3 NON-DISCRIMINATION IN REFERRALS 6
3.4 MINORITY AND FEMALE REFERRALS 6
3.5 CROSS AND QUALIFIED REFERRALS 6
3.6 UNION DUES 6
3.7 CRAFT FOREPERSONS AND GENERAL FOREPERSONS 7
4.0 UNION REPRESENTATION **7**
4.1 LOCAL UNION REPRESENTATIVE 7
4.2 STEWARDS OR LEAD ENGINEER 7
4.3 LAYOFF OF A STEWARD 7
5.0 MANAGEMENT RIGHTS **8**
5.1 RESERVATION OF RIGHTS 8
5.2 MATERIALS, METHODS AND EQUIPMENT 8
6.0 WORK STOPPAGES AND LOCKOUTS **8**
6.1 NO STRIKES – NO LOCKOUTS 8
6.2 DISCHARGE FOR VIOLATION 9
6.3 NOTIFICATION 9
6.4 EXPEDITED ARBITRATION 9
6.5 ARBITRATION OF DISCHARGES FOR VIOLATION 10
7.0 LABOR MANAGEMENT COMMITTEE **10**

DRAFT

7.1 SUBJECTS 10
7.2 COMPOSITION 11
8.0 GRIEVANCE AND ARBITRATION PROCEDURE 11
8.1 PROCEDURE FOR RESOLUTION OF GRIEVANCES 11
8.1.1 Step One 11
8.1.2 Step Two 12
8.1.3 Step Three 12
8.2 LIMITATIONS AS TO RETROACTIVITY 12
8.3 PARTICIPATION BY COUNTY CONSTRUCTION REPRESENTATIVE 12
9.0 JURISDICTIONAL DISPUTES 12
9.1 NO DISRUPTIONS 12
9.2 ASSIGNMENT 13
9.3 PROCEDURE FOR SETTLEMENT OF DISPUTES 13
9.4 AWARD 13
9.5 LIMITATIONS 14
9.6 NO INTERFERENCE WITH WORK 14
10.0 WAGES AND BENEFITS 14
10.1 CLASSIFICATION AND BASE HOURLY RATE 14
10.2 EMPLOYEE BENEFIT FUNDS 14
11.0 HOURS OF WORK, PREMIUM PAYMENTS, SHIFTS AND HOLIDAYS 16
11.1 WORK WEEK AND WORK DAY 16
11.2 OVERTIME 16
11.3 SHIFTS 16
11.4 HOLIDAYS 17
11.5 REPORTING PAY 17
11.6 PAYMENT OF WAGES 18
11.7 EMERGENCY WORK SUSPENSION 18
11.8 INJURY – DISABILITY 18
11.9 TIME KEEPING 19
11.10 MEAL PERIOD 19
11.11 BREAK PERIODS 19
12.0 APPRENTICES 19
12.1 RATIOS 19
12.2 DEPARTMENT OF LABOR 19
13.0 SAFETY PROTECTION OF PERSON AND PROPERTY 20
13.1 SAFETY REQUIREMENTS 20
13.2 CONTRACTOR RULES 20
13.3 INSPECTIONS 20
14.0 NO DISCRIMINATION 20

DRAFT

14.1 COOPERATIVE EFFORTS 20
14.2 LANGUAGE OF AGREEMENT 20
15.0 GENERAL TERMS 21
15.1 PROJECT RULES 21
15.2 TOOLS OF THE TRADE 21
15.3 SUPERVISION 21
15.4 TRAVEL ALLOWANCES 21
15.5 FULL WORK DAY 21
15.6 COOPERATION 21
16.0 SAVINGS AND SEPARABILITY 22
16.1 THIS AGREEMENT 22
16.2 THE BID SPECIFICATIONS 22
16.3 NON-LIABILITY 22
16.4 NON-WAIVER 22
17.0 FUTURE CHANGES IN COLLECTIVE BARGAINING AGREEMENTS 22
17.1 CHANGES TO AGREEMENTS 22
17.2 LABOR DISPUTES DURING LOCAL CONTRACT NEGOTIATIONS 23
APPENDIX A 24
APPENDIX A (CONTINUED) 25
APPENDIX B 26

DRAFT

INTRODUCTION

WHEREAS, The Rockland County Solid Waste Management Authority d/b/a Rockland Green acting as its own Construction Manager, desires to provide for the cost efficient, safe, quality and timely completion of a construction project for an Immersive Theater & Educational Exhibits in a manner designed to afford the lowest costs to the County and the Public it represents and the advancement of permissible public policy objectives;

WHEREAS, this Project Labor Agreement shall foster the achievement of these goals, inter alia, by:

1. avoiding the costly delays of potential strikes, slowdowns, walkouts, picketing and other disruptions arising from work disputes and promote labor harmony and peace for the duration of the Project;

2. standardizing the terms and conditions governing the employment of labor on the Project;

3. permitting wide flexibility in work scheduling and shift hours and times;

4. receiving negotiated adjustments as to work rules and staffing requirements from those which otherwise might obtain;

5. providing comprehensive and standardized mechanisms for the settlement of work disputes, including those relating to jurisdiction;

6. ensuring a reliable source of skilled and experienced labor;

7. furthering public policy objectives as to improved employment opportunities for minorities, women and the economically disadvantaged in the construction industry;

8. minimizing potential losses of revenues;

9. expediting the construction process and otherwise minimizing the inconveniences to the citizens of the County of Rockland; and

WHEREAS, the parties desire to maximize Project safety conditions for both workers and the public; NOW, THEREFORE, the Parties enter into this Agreement:

PARTIES TO THE AGREEMENT

This is a Project Labor Agreement (AGREEMENT) entered into by and between Rockland Green and its successors and assigns Rockland Green for the Immersive Theater & Educational Exhibits project and by the Rockland County Building and Construction Trades Council, AFL-CIO (COUNCIL) (on behalf of itself

DRAFT

and its affiliated Local Unions and their members) (LOCAL UNIONS). The Council and Local Unions warrant and represent that it has been duly authorized to enter into this Agreement.

All notices shall be made in unity to Gerard M. Damiani jr., Executive Director. Rockland Green, 171 Main Street, Nanuet, 10954, (office) (845) 753-2200, (fax) (845) 753-2281 or to his email address @ gdamiani@rocklandgreen.com

1.0 GENERAL CONDITIONS

1.1 DEFINITIONS

Throughout this Agreement, the Council and the signatory Local Unions are referred to singularly and collectively as "Union(s)". Where specific reference is made to "Local Unions" that phrase is sometimes used; the term "Contactor(s)" shall include and all signatory Contractors and their subcontractors of whatever tier, engaged in on-site Project construction work within the contractors and their subcontractors of whatever tier, engaged in on-site Project construction work within the scope of this Agreement as defined in Section 2.0; the Rockland County Building and Construction Trades Council, AFL-CIO is referred as the "Council" and the work covered by this Agreement (as defined in Section 2.0) is referred to as the "Project Work". The term "Employees" shall include the workers employed by the contractor.

1.2 CONDITIONS FOR AGREEMENT TO BECOME EFFECTIVE

This Agreement shall not become effective unless each of the following conditions are met:

1. the Agreement is approved and signed by the Council, and the Local Unions having jurisdiction over the Project work;

2. the Agreement is approved and signed by Rockland Green.

1.3 ENTITIES BOUND AND ADMINISTRATION OF AGREEMENT

This Agreement shall be binding on all signatory Unions and Rockland Green and all signatory Contractors performing on-site Project work, including site preparation, and staging areas, as defined in Section 2.0. The Contractors shall include in any subcontract that they let for performance during the term of this Agreement a requirement that their subcontractors, of whatever tier, become a signatory to the Letter of Assent (Appendix B) and are bound by this Agreement with respect to subcontracted work performed within the scope of Section 2.0. This Agreement shall be administered by Rockland Green on behalf of all Contractors.

1.4 SUPREMACY CLAUSE

This Agreement, together with the Collective Bargaining Agreements of the Local Unions incorporated by reference herein represents the complete understanding of all signatories and supersedes any national

DRAFT

agreement, local agreement or other collective bargaining agreement of any type which would otherwise apply to this Project, in whole or in part. Where a subject covered by the provisions, explicit or implicit, of this Agreement is also covered by a Collective Bargaining Agreement of a Local Union the provisions of this Agreement shall prevail. It is further understood that no Contractor shall be required to sign any other agreement as a condition of performing work on this Project. No practice, understanding or agreement between a Contractor and a Local Union, which is, not explicitly set forth in this Agreement shall be binding on this Project unless endorsed in writing by the County.

1.5 LIABILITY

The liability of any Contractor and the liability of any Union under this Agreement shall be severed and not joint. Rockland Green and any Contractor shall not be liable for any violations of this Agreement by any other Contractor; and the Council and Local Unions shall not be liable for any violations of this Agreement by any other Union.

1.6 ROCKLAND GREEN – CONSTRUCTION REPRESENTATIVE

Rockland Green shall require in its bid specifications for all work within the scope of Section 2.0 that all successful bidders and their subcontractors of whatever tier, become bound by and signatory to, this Agreement. It is understood that nothing in this Agreement shall be construed as limiting the sole discretion of Rockland Green in determining which Contractors shall be awarded contracts for Project work. It is further understood that Rockland Green shall have sole discretion at any time to terminate, delay or suspend the Project work, in whole or in part.

1.7 AVAILABILITY AND APPLICABILITY TO ALL SUCCESSFUL BIDDERS

The Unions agree that this Agreement shall be made available to and shall fully apply to any successful bidder for Project Work who becomes signatory thereto, without regard to whether that successful bidder performs work at other sites on either a union or non-union basis and without regard to whether employees of such successful bidder are, or are not, members of any unions. This Agreement shall not apply to the work of any Contractor which is performed at any location other than the Project site as defined in Section 2.1.

2.0 SCOPE OF THIS AGREEMENT

The Project work covered by this Agreement shall be as defined and limited by the following sections of this Section.

2.1 THE WORK

This Agreement shall only apply to the following on-site construction work performed for An Immersive Theater & Educational Exhibits in Nanuet, NY including any amendments or modifications thereto (Contract Documents). “On site” construction work in connection with the above shall be defined to

DRAFT

include Project Work performed at preparation and staging areas located within 15 miles of the Project site provided such work is covered by a Collective Bargaining Agreement.

2.2 TIME LIMITATIONS

This Agreement shall be further limited to Project Work performed under Project XX, New Immersive Theater & Educational Exhibits project in Nanuet, NY. It is further understood that this Agreement, together with all of its provisions, shall remain in effect for the duration of all Project Work.

2.3 EXCLUDED EMPLOYEES

The following persons (excluding drivers) are not subject to the provisions of this Agreement, even though performing work on the Project:

1. Superintendents, supervisors (excluding general and forepersons specifically covered by a craft's Schedule A), engineers, inspectors and testers, quality control/assurance personnel, timekeepers, mail carriers, clerks, office workers, messengers, guards, technicians (for startup and testing and not for installation), non-manual employees, and all professional (excluding surveyors), architectural, engineering, administrative and management persons.

2. Employees of Rockland Green, or of any State agency, authority or entity or employees of any municipality or other public employer.

3. Employees and entities engaged in off-site (farther than 15 miles from the Project site as set forth in Section 2.1) manufacture, modifications, repair, maintenance, assembly, painting, handling or fabrication of project components, materials, equipment or machinery (unless specifically covered by a craft's Schedule A) or involved in deliveries to and from the Project site, excepting local deliveries of all major construction materials including fill, ready mix, asphalt and Item 4, which are covered by this Agreement;

4. Employees engaged in on-site equipment warranty work.

5. Employees engaged in laboratory or specialty testing or inspections.

6. Employees of companies engaged in ancillary Project work performed by third parties such as electric utilities, water utilities, gas utilities, telephone operating companies, railroads and cross connection termination of existing lines belonging to Rockland Green for data and telephone. However, contractors and subcontractors engaged by third parties to perform such work are subject to and shall be a signatory to this Agreement.

DRAFT

7. The work of the Contractor that is normally performed under the terms of a National Specialty Agreement including, but not limited to, the National Tank Manufacturing Agreement, the Stack Liner Agreement, the Rubber Liner Agreement, or any other National Specialty Agreement.

2.4 NON-APPLICATION TO CERTAIN ENTITIES

This Agreement shall not apply to the parents, affiliates, subsidiaries, or other joint or sole ventures of any Contractor, which do not perform work at this Project including RG CARES. It is agreed, for the purposes of this Agreement only, that this Agreement does not have the effect of creating any joint employment, single employer, or alter ego status among Rockland Green and/or any Contractor. The Agreement shall further not apply to Rockland Green or any other county or state agency, authority or other municipal or public entity and nothing contained herein shall be construed to prohibit or restrict Rockland Green or its employees or any other county or state authority, agency or entity and its employees from performing on or off-site work related to the Project. As the contracts which comprise the Project work are completed and accepted, the Agreement shall not have further force or effect on such items or areas except where inspections, additions, repairs, modifications, check-out and/or warranty work are assigned in writing (copy to Local Union involved) by Rockland Green for performance under the terms of this Agreement.

3.0 UNION RECOGNITION AND EMPLOYMENT

3.1 PRE-HIRE RECONGNITION

The Contractors recognize the signatory Unions as the sole and exclusive bargaining representatives of all craft employees who are performing on-site Project work within the scope of this Agreement as defined in Section 2.0. The parties stipulate that this Agreement and all Collective Bargaining Agreements governed herein are “pre-hire agreements” as defined by Section 8(f) of the National Labor Relations Act.

3.2 UNION REFERRAL

A. The Contractors agree to hire craft employees of the Local Unions covered by this Agreement through the job referral system and hiring halls (where the referrals meet the qualifications set forth in Item’s 1, 2 and 4 of subparagraph B) established in the Local Union’s area Collective Bargaining Agreements (attached as Schedule A to this Agreement). Notwithstanding this *requirement*, the Contractors shall have sole right to determine the competency of all referrals; the number of employees required; the selection of employees to be laid off (except as provided in Section 4.3); and the sole right to reject any applicant referred by a Local Union, subject to the show-up payments required in the applicable Schedule A. In the event that a Local Union is unable to fill any request for qualified employees within a 48-hour period after such requisition is made by the Contractor (Saturdays, Sundays and Holidays excepted), the Contractor may employ qualified applicants from any other available source. In the event that the Local Union does not have a job referral system, the Contractor shall give the Local Union first preference to refer applicants, subject to the other provisions of this Section. The Contractor shall notify the

DRAFT

Local Union of employees hired within its jurisdiction from any source other than referral by the Union.

B. No more than twelve percent (12%) per centum of the employees covered by this Agreement, per Contractor by craft, shall be hired through the special provisions above (any fraction shall be rounded to the next highest whole number). The twelve percent (12%) per centum provision only applies after the Contractor hires its first employee from the appropriate Local Union.

3.3 NON-DISCRIMINATION IN REFERRALS

The Local Unions represent that their hiring halls and referral systems shall be operated in a non-discriminatory manner and in full compliance with all applicable federal, state and local laws and regulations which require equal employment opportunities. Referrals shall not be affected in any way by the rules, regulations, bylaws, constitutional provisions or any other aspects or obligations of union membership, policies or requirements and shall be subject to such other conditions as are established in this Section. No employment applicant shall be discriminated against by the referral system or hiring hall because of the applicant's union membership, or lack thereof.

3.4 MINORITY AND FEMALE REFERRALS

In the event a Local Union either fails, or is unable, to refer qualified minority or female applicants in percentages equaling Project affirmative action goals as set forth in Rockland Green's bid specifications, the Contractor may employ qualified minority or female applicants from any other available source.

3.5 CROSS AND QUALIFIED REFERRALS

The Local Union shall not knowingly refer to a Contactor an employee then employed by another Contractor working under this Agreement. The Local Unions shall exert their utmost efforts to recruit sufficient numbers of skilled and qualified craft employees to fulfill the requirements of the Contractor.

3.6 UNION DUES

All employees covered by this Agreement shall be subject to the union security provisions contained in the applicable Schedule A Collective Bargaining Agreements, as amended from time to time, but only for the period of time during which they are performing on-site Project work and only to the extent of rendering payment of the applicable monthly union dues uniformly required for union membership in the Local Unions, signatory to this Agreement, which represents the craft in which the employee is performing Project work. No employee shall be discriminated against at the Project site because of the employee's union membership or lack thereof. In the case of unaffiliated employees, the dues payment will be received by the Unions as an agency shop fee.

DRAFT

3.7 CRAFT FOREPERSONS AND GENERAL FOREPERSONS

The selection of craft forepersons and/or general forepersons and the number of forepersons required shall be solely the responsibility of the Contractor except where otherwise provided by specific provisions of an applicable Schedule A. All forepersons shall take orders exclusively from the designated Contractor representatives. Craft forepersons shall be designated as working forepersons at the request of the Contactor, except when an existing local Collective Bargaining Agreement prohibits a foreperson from working when the craftsperson he is leading exceed a specified number.

4.0 UNION REPRESENTATION

4.1 LOCAL UNION REPRESENTATIVE

Each Local Union representing on-site Project employees shall be entitled to designated writing (copy to Contractor involved and County) representative and/or the Business Manager, who shall be afforded access to the Project.

4.2 STEWARDS OR LEAD ENGINEER

A. Each Local Union shall have the right to designate a working journeyperson as a Steward and an alternate and shall notify the Contractor and Rockland Green of the identity of the designated Steward (and alternate) prior to the assumption of such duties. Stewards shall not exercise supervisory functions and shall receive the regular rate of pay for their craft classifications. There shall be no non-working Stewards on the Project.

B. In addition to their work as an employee, the Steward shall have the right to receive complaints or grievances and to discuss and assist in their adjustment with the Contractor's appropriate supervisor. Each Steward shall be concerned with the employees of the Steward's Contract and if applicable, subcontractors of the Contractor, but not with the employees of any other Contractor. The Contractor shall not discriminate against the Steward in the proper performance of Union duties.

C. The Stewards shall not have the right to determine when overtime shall be worked, or who shall work overtime except pursuant to a Schedule A provision providing procedures for the equitable distribution of overtime.

4.3 LAYOFF OF A STEWARD

Contractors agree to notify the appropriate Union 24 hours prior to the layoff of a Steward, except in cases of discipline or discharge for just cause. If a Steward is protected against layoff by Schedule A, such provisions shall be recognized to the extent the Steward possesses the necessary qualifications to perform the work required. In any case in which a Steward is discharged or disciplined for just cause, the Local Union involved shall be notified immediately by the Contractor.

DRAFT

5.0 MANAGEMENT RIGHTS

5.1 RESERVATION OF RIGHTS

Except as expressly limited by a specific provision of this Agreement, Contractors retain full and exclusive authority for the management of their Project operations including, but not limited to: the right to direct the work force, including determination as to the number to be hired and the qualifications therefore; the promotion, transfer, layoff of its employees; or the discipline or discharge for just cause of its employees; the assignment and schedule of work; the promulgation of reasonable Project work rules; and the requirement, timing and number of employees to be utilized for overtime work. No rules, customs or practices which limit or restrict productivity or efficiency of the individual, as determined by the Contractor or Rockland Green and/or joint working efforts with other employees shall be permitted or observed.

5.2 MATERIALS, METHODS, AND EQUIPMENT

There shall be no limitation or restriction unless specified in Rockland Green Documents, upon the Contractor's choice of materials, techniques, methods, technology or design, or regardless of source or location, upon the use and installation of equipment, machinery, package units, precast, pre-fabricated, pre-finished, or pre-assembled materials, tools or other labor-saving devices. Contractors may, without restriction, install or use materials, supplies or equipment regardless of their source. The on-site installation or application of such items shall be performed by the craft having jurisdiction over such work; (re-bar will be fabricated and installed as per the requirements of Schedule A) provided, however, it is recognized that other personnel having special qualifications may participate, in a supervisory capacity, in the installation, check-off or testing of specialized or unusual equipment or facilities as designated by the Contractor. There shall be no restrictions as to work, which is performed off-site for the Project.

6.0 WORK STOPPAGES AND LOCKOUTS

6.1 NO STRIKES – NO LOCKOUTS

There shall be no strikes, sympathy strikes, picketing, work stoppages, slowdowns, hand billing, demonstrations, or other disruptive activity at the Project for any reason by any Union or employee against any Contractor or employer while performing work at the Project. There shall be no other Union, or concerted or employee activity which disrupts or interferes with the operation of the County. Failure of any Union or employee to cross any picket line established by any Union, signatory or non-signatory to this Agreement, or the picket or demonstration line of any other organization, at or in proximity to the Project site is a violation of this Section. There shall be no lockout at the Project by any signatory Contractor. Contractors and Unions shall take all steps necessary to ensure compliance with this Section 6.1 and to ensure uninterrupted construction for the duration of this Agreement.

DRAFT

6.2 DISCHARGE FOR VIOLATION

A Contractor may discharge any employee violating Section 6.1, above, and any such employee shall not be eligible thereafter for referral under this Agreement for a period of one hundred (100) calendar days.

6.3 NOTIFICATION

If a Contractor contends with any Union has violated this Section, it shall notify the Council advising of such fact, with copies of the notification to the Local Union. The Council shall instruct, order and otherwise use its best efforts to cause the employees and/or the Local Unions to immediately cease and desist from any violation of this Section. The Council, complying with these obligations shall not be liable for the unauthorized acts of a Local Union or its members.

6.4 EXPEDITED ARBITRATION

Any Contractor or Union alleging a violation of Section 6.1 of this Section may utilize the expedited procedure set forth below (in lieu of, or in addition to, any actions at law or equity) that may be brought.

1. A party invoking this procedure shall notify the AAA arbitrator selected who shall act as Arbitrator under this expedited arbitration procedure. Copies of such notification shall be simultaneously sent to the alleged violator and if a Local Union is alleged to be in violation, the Council and Rockland Green.

2. The Arbitration shall thereupon, after notice as to time and place to the Contractor, the Local Union involved, the Council and Rockland Green a hearing within 48 hours of receipt for the notice invoking the procedure if it is contended that the violation still exists. The hearing shall not, however, be scheduled for less than 24 hours after the notice to the Council required by Section 6.3, above.

3. All notices pursuant to this Section may be by telephone, telegraph, hand delivery, or fax, confirmed by overnight delivery, to the Arbitrator, Contractor or Union involved. The hearing may be held on any day including Saturdays or Sundays. The hearing shall be completed in one (1) session, which shall not exceed eight (8) hours duration (no more than four (4) hours being allowed to either side to present their case and conduct their cross examination) unless otherwise agreed. A failure of any Union or Contractor to attend the hearing shall not delay the hearing of evidence by those present or the issuance of an award by the Arbitrator.

4. The sole issue at the hearing shall be whether a violation of Section 6.1, above, occurred. If a violation is found to have occurred, the Arbitrator shall issue a Cease-and-Desist Award restraining such violation and serve copies on the Contractor and the Union involved. The Arbitrator shall have no authority to consider any matter in justification, explanation, or mitigation of such violation or to award damages, which issue is reserved solely for court proceedings, if

DRAFT

any. The Award shall be issued in writing within three (3) hours after the close of the hearing and may be issued without an Opinion. If any involved party desires an Opinion, one shall be issued within fifteen (15) calendar days, but its issuance shall not delay compliance with or enforcement of the Award.

5. An Award issued under this procedure may be enforced by any court of competent jurisdiction upon the filing of this Agreement together with the Award. Notice of the filing of such enforcement proceedings shall be given to the Union or Contractor involved. In any court proceeding to obtain a temporary or preliminary order enforcing the Arbitrator's award as issued under this expedited procedure, the involved Union and Contractor waive their right to a hearing and agree that such proceedings may be ex parte, provided notice is given to opposing counsel. Such agreement shall not waive any party's right to participate in a hearing for a final court order of enforcement in any contempt proceeding.

6. Any rights created by statute or law governing arbitration proceedings which are inconsistent with the procedure set forth in this Section, or which interfere with compliance thereto, are hereby waived by the Contractors and Unions to whom they accrue.

7. The fees, expenses and all advance deposits required by the AAA of the Arbitrator shall be borne equally between the involved Contractor and Local Union.

6.5 ARBITRATION OF DISCHARGES FOR VIOLATION

Procedures contained in Section 8.0 shall not be applicable to any alleged violation of this Section, with the single exception that an employee discharged for violation of Section 6.1, above, may have recourse to the procedures of Section 8.0 to determine only if the employee did, in fact, violate the provisions of Section 6.1; but not for the purpose of modifying the discipline imposed where a violation is found to have occurred.

7.0 LABOR MANAGEMENT COMMITTEE

7.1 SUBJECTS

The Project Labor Management Committee shall meet on a regular basis to:

1. promote harmonious relations among the Contractors and Unions;

2. enhance safety awareness, cost effectiveness and productivity of construction operations;

3. protect the public interests;

4. discuss matters relating to staffing and scheduling with safety and productivity as considerations; and

DRAFT

5. review Affirmative Action and equal employment opportunity matters pertaining to the Project.

7.2 COMPOSITION

The Committee shall be jointly chaired by designees of the President of the Council and Rockland Green, Construction Representative and representatives of the Local Unions and Contractors involved in the issues being discussed. The Committee may conduct business through mutually agreed sub-committees.

8.0 GRIEVANCE AND ARBITRATION PROCEDURE

8.1 PROCEDURE FOR RESOLUTION OF GRIEVANCES

Any question, dispute or claim arising out of, or involving the interpretation or application of this Agreement (other than jurisdictional disputes or alleged violations of Section 6.1) shall be considered a grievance and shall be resolved pursuant to the exclusive procedure of the steps described below; provided, in all cases, that the question, dispute or claim arose during the term of this Agreement.

8.1.1 Step One

A. When any Employee covered by this Agreement feels aggrieved by a claimed violation of this Agreement, the employee shall, through the Local Union business representative or job Steward give notice of the claimed violation to the work site representative of the involved Contractor. To be timely, such notice of the grievance must be within fourteen (14) calendar days after the act, occurrence or event given rise to the grievance. The business representative of the Local Union or the job Steward and the work site representative of the involved Contractor shall meet and endeavor to adjust the matter within fourteen (14) calendar days after a timely notice has been given. If they fail to resolve the matter within the prescribed period, the grieving party, may, within fourteen (14) calendar days thereafter, pursue Step Two of the grievance procedure by serving the involved Contractor and Rockland Green with written copies of the grievance occurred and the provisions of the Agreement alleged to have been violated. Grievances and disputes settled at Step One are non-precedential except as to the specific Local Union, employee and Contractor directly involved unless the settlement is accepted in writing by the County as creating a precedent.

B. Should any signatory to this Agreement have a dispute (excepting jurisdictional disputes or alleged violations of Section 6.1) with any other signatory to this Agreement and after conferring, a settlement is not reached within fourteen (14) calendar days, the dispute shall be reduced to writing and proceed to Step Two in the same manner as outlined in subparagraph (a) for the adjustment of employee grievances.

DRAFT

8.1.2 Step Two

A. The Business Manager or designee of the involved Local Union, together with representatives of the Council, the involved Contractor and Rockland Green's Construction Representative shall meet in Step Two within fourteen (14) calendar days of service of the written grievance to arrive at a satisfactory settlement.

8.1.3 Step Three

A. If the grievance shall have been submitted but not resolved in Step Two, any of the participating Step 2 entities may, within twenty-one (21) calendar days after the initial Step Two meeting, submit the grievance in writing (copies to other participants) to the Arbitrators under this procedure. The Labor Arbitration Rules of the American Arbitration Association shall govern the conduct of the arbitration hearing, at which all Step Two participants shall be parties. The decision of the Arbitrator shall be final and binding on the involved Contractor, Local Union and employees, and the fees, expenses and all advanced deposits required by the AAA of such arbitration shall be borne equally by the involved Contractor and Local Union.

B. Failure of the grieving party to adhere to the time limits set forth in this Section shall render the grievance null and void. These time limits may be extended only by written consent of Rockland Green, involved Contractor and involved Local Union at the particular step where the extension is agreed upon. The Arbitrator shall have authority to make decisions only on the issue presented to him and shall not have the authority to change, add to, delete or modify any provision of this Agreement.

8.2 LIMITATIONS AS TO RETROACTIVITY

No arbitration decision or award may provide retroactivity of any kind exceeding sixty (60) calendar days prior to the date of service of the written grievance on Rockland Green and the involved Contractor or Local Union.

8.3 PARTICIPATION BY ROCKLAND GREEN CONSTRUCTION REPRESENTATIVE

The Rockland Green Construction Representative shall be notified by the involved Contractor of all actions at Steps Two and Three and at its election, may participate in full all proceedings at these Steps, including Step Three arbitration.

9.0 JURISDICTIONAL DISPUTES

9.1 NO DISRUPTIONS

There shall be no strikes, sympathy strikes, work stoppages, slowdowns, picketing or other disruptive activity of any kind arising out of any jurisdictional dispute. Pending the resolution of the dispute, the work

DRAFT

shall continue uninterrupted and as assigned by the Contractor. No jurisdictional dispute shall excuse a violation of Section 6.0.

9.2 ASSIGNMENT

All project construction work assignments shall be made pursuant to law.

9.3 PROCEDURE FOR SETTLEMENT OF DISPUTES

A. Any Union having a jurisdictional dispute with respect to Project work assigned to another Union shall submit the dispute in writing to the Construction Representative, Plan for the Settlement of Jurisdictional Disputes in the Construction Industry ("The Plan") within seventy-two (72) hours and send a copy of the letter to the other Union involved, the Contractor involved, Rockland Green and the Council. Upon receipt of a dispute letter from any union, the Construction Representative will invoke the procedures set forth in the plan to resolve the jurisdictional dispute. The jurisdictional dispute letter shall contain the information described in Section 3.0 of the Plan.

B. Within five (5) calendar days of receipt of the dispute letter, there shall be a meeting of the Contractor involved, Rockland Green, the Local Unions involved, and designees of the Council involved for the purpose of resolving the jurisdictional dispute.

C. If the dispute remains unresolved after this meeting, the parties shall proceed to final and binding arbitration in accordance with the principles and procedures set forth in the rules of the "Plan for the Settlement of Jurisdictional Disputes in the Construction Industry."

D. The Arbitrator appointed under this Section shall render a short-form decision within five (5) days of the hearing based upon the evidence submitted at the hearing, with a written decision to follow within thirty (30) days of the close of the hearing.

E. This Jurisdictional Dispute Resolution Procedure will only apply to work performed by Local Unions at the Project.

F. Any Local Union involved in a jurisdictional dispute on this Project shall continue working in accordance with Section 9.2 above and without disruption of any kind.

9.4 AWARD

Any jurisdictional award pursuant to Section 9.3 shall be final and binding on the disputing Local Unions and the involved Contractor on this Project only and may be enforced by the Supreme Court of New York, County of Rockland in any court of Rockland County. Such award or resolution shall not establish a precedent on any other construction work not covered by this Agreement. In all disputes under this Section, Rockland Green and the involved Contractors shall be considered parties in interest.

DRAFT

9.5 LIMITATIONS

The Arbitrator appointed under this Section shall have no authority to assign work to a double crew, that is, to more employees than the minimum required by the Contractor to perform the work involved; nor to assign the work to employees who are not qualified to perform work involved; nor to assign work being performed by non-union employees to union employees. This does not prohibit the establishment, with the agreement of the involved Contractor, of composite crews where more than one (1) employee is needed for the job. The aforesaid determinations shall decide only to whom the disputed work belongs.

9.6 NO INTERFERENCE WITH WORK

There shall be no interference or interruption of any kind with the work of the Project while any jurisdictional dispute is being resolved. The work shall proceed as assigned by the Contractor until finally resolved under the applicable procedure of this Section.

The award shall be confirmed in writing to the involved parties. There shall be no strike, work stoppage, or interruption in protest of any such award.

10.0 WAGES AND BENEFITS

10.1 CLASSIFICATION AND BASE HOURLY RATE

All employees covered by this Agreement shall be classified in accordance with the work performed and paid the base hourly wage rates for those classifications as specified in the attached Schedule A, New York State Wage Rates included in the contract specifications, as amended during this Agreement. Recognizing, however, that special conditions may exist or occur on the Project, the parties, by mutual agreement may establish rates and/or hours for one or more classifications which may differ from Schedule A. Parties to such agreements shall be Rockland Green, the Contractor, and the Local Unions.

10.2 EMPLOYEE BENEFIT FUNDS

A. The Contractors agree to pay contributions on behalf of all employees covered by this Agreement to the established employee benefit funds in the amount designated in the appropriate Schedule A; provided, however, that the Contractor and the Union agree that only such bona fide employee benefits as are explicitly required under Section 220 of the New York State Labor Law shall be included in this requirement and paid by the Contractor on this Project. Bona fide jointly trusted fringe benefit plans established or negotiated through collective bargaining during the life of this Agreement may be added if similarly protected under Section 220. Contractors shall not be required to contribute to non-Section 220 benefits, trusts, or plans.

B. The Contractor agrees to be bound by the written terms of the legally established Trust Agreements specifying the detailed basis on which payments are to be paid into and benefits paid

DRAFT

out of, such Trust Funds but only with regard to work done on this Project and only for those employees to whom this Agreement requires such benefit payments.

C. In the event that the Contractor becomes delinquent on the foregoing obligations and upon notification of at least fifteen (15) days from the date of a default from any affiliated Local Union that a signatory employer has become delinquent in the payment of Fund contributions due in connection with the work on this Project, the Contractor authorizes Rockland Green to immediately stop payment on all monies due or which may become due to the delinquent Contractor up to the amount alleged to be owed from this Project and to pay all such funds directly to the complaining Local Union to be applied against the amounts owed by the defaulting Contractor in order to ensure the full and timely remittance of all union dues, IAF, PAC and fringe benefit funds, including but not limited to Health and Welfare, Pension, Annuity, Legal Service, Education and Training, S.U.B., Apprenticeship (hereafter "Funds" or "Fund") due the affiliated Local Unions as provided for in all applicable collective bargaining agreements between the Local Unions and signatory employers which have contracted to perform work on the subject construction Project. Before such payment is made, Rockland Green shall first advise the defaulting Contractor in writing of the complaint made by the Local Union and the amounts claimed and shall allow the defaulting Contractor a period of ten (10) days from the date of notification to produce a written letter signed by the Business Manager of the complaining Local Union that the amount in default has been paid in full and the Contractor is current in the remittance of Funds or a bona-fide explanation acceptable to the complaining Local Union of why in the Contractor's opinion the amounts are not due as alleged. In the event of such a bona-fide dispute, Rockland Green shall use its best effort to act as an initial arbiter and take action it then deems appropriate.

D. No monies, however, shall be paid to the delinquent employer who may request arbitration of the dispute in accordance with Section 8.0 herein. In the event such request in writing is not delivered to Rockland Green, Construction Representative, within ten (10) days from the date of notification to the defaulting Contractor, Rockland Green shall immediately pay over to the Fund Administrator of the complaining Local Union all monies due the defaulting Contractor to the extent necessary to satisfy the amounts payable to the Contractor by Rockland Green for the Project. None of the foregoing is to be construed as having created a debt on the part of Rockland Green to the Local Union. Both the Contractor and the complaining Local Union agree that there shall be no strike, work stoppage or disruption pending resolution of the dispute.

E. Notwithstanding any other provisions of this Agreement, including any provisions to arbitrate disputes, the members of a Local Union can elect to refuse to perform services for a delinquent employer any time after a Benefit Fund delinquency exceeds forty-five (45) days, on five (5) calendar day's written notice the President of the Council and Rockland Green. The provisions of

DRAFT

Section 10.2 shall remain in full force and effect with respect to all other Local Union members working on the Project. If a Contractor fails to contribute to a Local Union's Benefit Funds because of the Contractor's inability to collect payment from Rockland Green for work performed on the Project, Rockland Green agrees that the Contractor shall not be removed from the job for non-performance which results from a Local Union's members refusing to perform services as set forth in this Section.

11.0 HOURS OF WORK, PREMIUM PAYMENTS, SHIFTS AND HOLIDAYS

11.1 WORK WEEK AND WORKDAY

A. The standard work week shall consist of forty (40) hours of work at straight time rates of the following schedule:

1. Five (5) Day Work Week: Monday through Friday – five (5) days, eight (8) hours plus half (½) hour unpaid lunch period each day.

B. The Day shift shall commence between the hours of 7:00 am and 8:00 am and shall end between the hours of 3:30 pm and 4:30 pm. Starting and quitting times shall occur at the staging areas as may be designated by the Contractor.

C. Contractors shall provide not less than five (5) days prior notice to the Local Union involved as to the work week and work hours schedules to be worked or such lesser notice as may be mutually agreed upon.

11.2 OVERTIME

Overtime pay for hours outside of the standard work week and workday, described in paragraph 11.1.A above, shall be paid in accordance with the applicable Schedule A. There will be no restriction upon the Contractor' scheduling of overtime or the non-discriminatory designation of employees who shall be worked. There shall be no pyramiding of overtime pay under any circumstances. The Contractor shall have the right to schedule work so as to minimize overtime.

11.3 SHIFTS

A. Flexible Schedules:
Scheduling of shift work shall remain flexible in order to meet Project schedules and existing Project conditions including the minimization of interference with traffic. It is not necessary to work a day shift in order to schedule a second shift. Shifts must be worked a minimum of five (5) consecutive workdays, must have prior approval of the Construction Project Manager and must be scheduled with not less than five (5) work days notice to the Local Union.

DRAFT

B. Second/Shift:

The second shift (starting between 3:30 pm and 4:30 pm) shall consist of eight (8) hours work for and equal number of hours pay at the straight time rate plus 15% in lieu of overtime and exclusive of a ½ hour unpaid lunch period. Where specifically required by the applicable Schedule A, employee's second shift, where there are no first shift employees scheduled for that craft, will be paid at time and one-half rates for such second shift work, but without any shift differential. In all other cases, the first sentence of this paragraph B shall apply.

C. Flexible Starting Times:

Shift starting times shall be adjusted by the Contractor as necessary to fulfill Project requirements subject to the notice requirements of paragraph A.

11.4 HOLIDAYS

A. Schedule:

There shall be 9 recognized holidays on the Project:

New Year's Day	Veterans Day
President's Day	Thanksgiving Day
Memorial Day	Day after Thanksgiving
Fourth of July	Christmas Day
Labor Day	

All said holidays shall be observed on the dates designated by New York State Law. In the absence of such designation, they shall be observed on the calendar date except those holidays which occur on Sunday shall be observed on the following Monday.

B. Payment:

Regular holiday pay, if any, and/or premium pay for work performed on such a recognized holiday shall be in accordance with the Holidays set forth in Section 11.4.A.

C. Exclusivity:

No holidays other than those listed in Section 11.4.A above shall be recognized nor observed.

11.5 REPORTING PAY

A. Employees who report to the work location pursuant to the regular schedule and who are not provided with work or whose work is terminated early be a Contractor, for whatever reason, shall receive minimum, reporting pay in accordance with the applicable Schedule A.

B. When an employee, who has completed their scheduled shift and left the Project site, is "called out" to perform special work of a casual, incidental, or irregular nature, the employee shall receive

DRAFT

pay for actual hours worked with a minimum guarantee, as may be required by the applicable Schedule A, at the employee's straight time rate.

C. When an employee leaves the job or work location of their own volition or is discharged for cause or is not working as a result of the Contractor's invocation of Section 11.7 below, they shall be paid only for the actual time worked.

D. Except as specifically set forth in this Section, there shall be no premiums, bonuses, high time or other special payment of any kind.

E. There shall be no pay for time not actually worked except as specifically set forth in this Section and except where an applicable Schedule A requires a full weeks' pay.

11.6 PAYMENT OF WAGES

A. Payday:
Payment shall be made by check, drawn on a New York State bank with branches located within commuting distance of the job site. Paychecks shall be issued by the Contractor at the job site by 10 am on Thursdays. In the event that the following Friday is a bank holiday, paychecks shall be issued on Wednesday of that week. Not more than three (3) days wages shall be held back in any pay period. Paycheck stubs shall contain the name and business address of the Contractor, together with an itemization of deductions from gross wages.

B. Termination:
Employees who are laid off or discharged for cause shall be paid in full for that which is due them at the time of termination. The Contractor shall also provide the employee with a written statement setting forth the date of lay off or discharge.

11.7 EMERGENCY WORK SUSPENSION

A. Contractor may, if considered necessary for the protection of life and/or safety of employees or others, suspend all or a portion of Project work. In such instances, employees shall be paid for actual time worked; provided, however, that when a Contractor requests that employees remain at the job site available for work, be paid for "stand by" time at their hourly rate of pay.

11.8 INJURY – DISABILITY

An employee who, after commencing work, suffers a work-related injury or disability while performing work duties; shall receive no less than 8 hours wages for that day. Further, the employee shall be rehired at such time as able to return to duties provided there is still work available on the Project for which the employee is qualified and able to perform.

DRAFT

11.9 TIME KEEPING

A Contractor may utilize brassing or other systems to check employees in and out. Each employee must check in and out. The Contractor shall provide adequate facilities for checking in and out in an expeditious manner.

11.10 MEAL PERIOD

A Contractor shall schedule an unpaid period of not more than 1/2-hour duration at the work location between the 3rd and 5th hour of the scheduled shift. A Contractor may, for efficiency of operation, establish a schedule, which coordinates the meal periods of two or more crafts. If an employee is required to work through the meal period, the employee shall be compensated in a manner established in the applicable Schedule A.

11.11 BREAK PERIODS

There shall be no rest periods, organized coffee breaks or other non-working time established during working hours. Individual coffee containers will be permitted at the employee's work location.

12.0 APPRENTICES

12.1 RATIOS

Recognizing the need to maintain continuing supportive programs designed to develop adequate numbers of competent workers in the construction industry and to provide craft entry opportunities for minorities, women and economically disadvantaged non-minority males, Contractors will employ apprentices in their respective crafts to perform such work as is within their capabilities and which is customarily performed by the craft in which they are indentured. Contractors may utilize apprentices and such other appropriate classifications as are contained in the applicable Schedule A in a ratio not to exceed 25% of the work force by craft (without regard to whether a lesser ratio is set forth in Schedule A), unless the applicable Schedules A provide for a higher percentage. Apprentices and such other classifications as are appropriate shall be employed in a manner consistent with the provisions of the appropriate Schedule A.

12.2 DEPARTMENT OF LABOR

To assist the Contractors in attaining a maximum effort on this Project, the Unions agree to work in close cooperation with, and accept monitoring by, the New York State Department of Labor to ensure that minorities and women are afforded every opportunity to participate in apprenticeship programs which result in the placement of apprentices on this Project. To further ensure that this Contractor effort is attained, up to 50% of the apprentices placed on this Project shall be first year, minority, women or economically disadvantaged apprentices as shall be 60% of the apprentice equivalents, placed on the Project, who do not necessarily meet all of the age or entrance requirements for the apprentice program

DRAFT

or have necessarily passed the entrance examination. The Local Unions will cooperate with the Contractor requests for minority, women or economically disadvantaged referrals to meet this Contractor effort.

13.0 SAFETY PROTECTION OF PERSON AND PROPERTY

13.1 SAFETY REQUIREMENTS

Each Contractor shall ensure that applicable OSHA requirements are at all times maintained on the Project and the employees and Unions agree to cooperate fully with these efforts. Contractors shall ensure that employees perform their work at all times in a safe manner and protect themselves and the property of the Contractor and Rockland Green from injury or harm. Failure of the employee to do so shall be grounds for discipline, including discharge.

13.2 CONTRACTOR RULES

Employees covered by this Agreement shall at all times be bound by the reasonable safety, security, and visitor rules as established by the Contractors and Rockland Green for this Project. Such rules shall be published and posted in conspicuous places throughout the Project.

13.3 INSPECTIONS

The Contractors and Rockland Green, Construction Representative retain the right to inspect incoming shipments of equipment, apparatus, machinery, and construction materials of every kind.

14.0 NO DISCRIMINATION

14.1 COOPERATIVE EFFORTS

The Contractors and Unions agree that they shall not discriminate against any employee or applicant for employment because of race, color, religion, sex, national origin, or age in any manner prohibited by law or regulation. It is recognized that special procedures may be established by Contractors and Local Unions and the New York State Department of Labor for the training and employment of persons who have not previously qualified to be employed on construction projects of the type covered by this Agreement. The parties to this Agreement shall assist in such programs and to agree to use their best efforts to ensure that the goals for female and minority employment are met on this Project.

14.2 LANGUAGE OF AGREEMENT

The use of the masculine or feminine gender in this Agreement shall be construed as including both genders.

DRAFT

15.0 GENERAL TERMS

15.1 PROJECT RULES

Rockland Green, Construction Representative, and the Contractors shall establish such reasonable Project rules as are appropriate for the good order of the Project. These rules shall be explained at the pre-job conference and posted at the Project site and may be amended thereafter as necessary. Failure of an employee to observe these rules and regulations shall be grounds for discipline, including discharge. The fact that no order was posted prohibiting a certain type of misconduct shall not be a defense to an employee disciplined or discharged for such misconduct when the action taken is for cause.

15.2 TOOLS OF THE TRADE

The welding/cutting torch and chain fall are tools of the trade having jurisdiction over the work performed. Employees using these tools shall perform any of the work of the trade. There shall be no restrictions on the emergency use of any tools or equipment by any qualified employee or on the use of any tools or equipment for the performance of work within the employee's jurisdictions.

15.3 SUPERVISION

Employees shall work under the supervision of the craft foreperson or general foreperson.

15.4 TRAVEL ALLOWANCES

There shall be no payments for travel expenses, travel time, subsistence allowance or other such reimbursements or special pay except as expressly set forth in this Agreement.

15.5 FULL WORKDAY

Employees shall be at their staging area at the starting time established by the Contractor and shall be returned to their staging area by quitting time after performing their assigned functions under the supervision of the Contractor. The signatories reaffirm their policy of a fair day's work for a fair day's wage.

15.6 COOPERATION

Rockland Green, Construction Representative, and the Unions shall cooperate in seeking any New York State Department of Labor approvals that may be required for implementation of any terms of this Agreement.

DRAFT

16.0 SAVINGS AND SEPARABILITY

16.1 THIS AGREEMENT

In the event that the application of any provision of this Agreement is enjoined, on either an interlocutory or permanent basis, or otherwise found in violation of law, the provision involved shall be rendered, temporarily or permanently, null and void but the remainder of the Agreement shall remain in full force and effect. In such event, the Agreement shall remain in effect for contracts already bid and awarded or in construction where the Contractor voluntarily accepts the Agreement. The parties to this Agreement shall enter into negotiations for a substitute provision in conformity with the law the intent of the parties for contracts to be let in the future.

16.2 THE BID SPECIFICATIONS

In the event that Rockland Greens bid specifications, or other action, requiring that a successful bidder become signatory to this Agreement is enjoined, on either an interlocutory or permanent basis, or otherwise found in violation of law such requirement shall be rendered, temporarily or permanently, null and void but the Agreement shall remain in full force and effect to the extent allowed by law. In such event, the Agreement shall remain in effect for contracts already bid and awarded or in construction where the Contractor voluntarily accepts the Agreement. The parties shall enter into negotiations as to modifications to the Agreement to reflect the court action taken and the intent of the parties for contracts to be let in the future.

16.3 NON-LIABILITY

In the event of an occurrence referenced in Section 16.1 or 16.2, neither Rockland Green, Construction Representative, or any or any Contractor, or any signatory Union shall be liable, directly, or indirectly, for any action taken, or not taken, to comply with any court order, injunction or determination. Project bid specifications shall be issued in conformance with court orders then in effect and no retroactive payments or other action shall be required if the original court determination is ultimately reversed.

16.4 NON-WAIVER

Nothing in this Section shall be construed as waiving the prohibitions of Section 6.0 as to signatory Contractors and signatory Unions.

17.0 FUTURE CHANGES IN COLLECTIVE BARGAINING AGREEMENTS

17.1 CHANGES TO AGREEMENTS

A. The Collective Bargaining Agreement incorporated herein shall continue in full force and effect until the Contractor and/or Unions to the Collective Bargaining Agreements notify Rockland Green in writing of the mutually agreed upon changes in provisions of such agreements which are applicable to the Project, and their effective dates.

DRAFT

B. It is agreed that any provisions negotiated into the Collective Bargaining Agreements incorporated by reference herein shall not apply to work on this Project if such provisions are less favorable to this Project than those uniformly required of contractors for construction work normally covered by those agreements; nor shall any provision be recognized or applied on this Project if it may be construed to apply exclusively, or predominantly, to work covered by this Agreement.

C. Any disagreement between signatories to this Agreement over the incorporation into provisions agreed upon in the renegotiation of a Collective Bargaining Agreements incorporated by reference herein shall be resolved in accordance with the procedure set forth in Section 8.0 of this Agreement.

17.2 LABOR DISPUTES DURING LOCAL CONTRACT NEGOTIATIONS

The Unions agree that there shall be no strikes, work stoppages, sympathy actions, picketing, slowdowns or other disruptive activity or other violations of Section 6.0 affecting the Project by any Local Union involved in the renegotiation of Local Collective Bargaining Agreements nor shall there be any lock-out on this Project affecting a Local Union during the course of such renegotiations.

DRAFT

APPENDIX A
Listing of Local Collective Bargaining Agreements

1. Bricklayers and Allied Crafts, Local #1, New York.

2. Agreement between International Brotherhood of Electrical Workers, Local Union #363, and Hudson Valley Chapter National Electrical Contractors Association.

3. Agreement between Fabricators and Erectors Association, Inc., and Local Union 417 of the International Association of Bridge, Structural, Ornamental and Reinforcing Ironworkers.

4. Heavy, Highway and Utility Agreement between the Contractors Association of Rockland County, Inc., and the Eastern New York Laborers' International District Council and its Affiliate Laborers' Local 754.

5. Building Agreement between the Construction Contractors Association of the Hudson Valley, Inc., and the Eastern New York Laborers' International District Council and its Affiliate Laborers' Local 754.

6. Agreement by and between International Union of Operating Engineers affiliated with AFL-CIO, Local Union No. 825, 825-A, 825-B, 825-C, 825-D, 825-R, 825-RH.

7. Agreement between Mechanical Contractors Association of Rockland County and Vicinity, New York and Local Union No. 373, United Association of Journeymen and Apprentices of the Plumbing and Pipe Fitting Industry of the United States and Canada.

8. Agreement between Sheet Metal Workers International Association, Local 38 and SMCNA Southeastern New York & The Associated Sheet Metal and Roofing Contractors of Connecticut, Inc.

9. Agreement between the Boiler Makers Association of Greater New York and Boilermakers Local Lodge No. 5 of the International Brotherhood of Boilermakers, Iron Ship Builders, Blacksmiths, Forgers and Helpers, AFL-CIO.

10. Agreement between Industrial Insulation Contractors of Southern New York and The International Association of Heat and Frost Insulators and Asbestos Workers Local #91.

11. Teamsters Local #445, New York.

12. Agreement between Independent Resilient Floor Coverers and The District Council of New York City and Vicinity of the United Brotherhood of Carpenters and Joiners of America, AFL-CIO.

13. Operative Plasterers' and Cement Masons Local 530.

14. United Cement Masons Local 780.

15. Metallic Lathers Local 46

16. Painters Local 155

17. Millwrights Local 740

DRAFT

APPENDIX A (Continued)

18. Tri-State Marble BAC Local 7 and Local 7 Tile, Marble & Terrazzo
19. Road Sprinkler Fitters Local 669
20. District Council 9 Local 1281 Glaziers
21. Dockbuilders Local 1556
22. North Atlantic States Regional Council of Carpenters Local 279

DRAFT

APPENDIX B
Letter of Assent

Pursuant to the Introduction and Sections 1.0 and 2.0 of the Project Labor Agreement (PLA) negotiated by the Rockland County Solid Waste Management Authority d/b/a Rockland Green for and on behalf of all contractors and subcontractors (at any tier) to be engaged in the construction of the Project as defined in the Introduction and Section 2.0 of the PLA, the undersigned authorized representative of the *Contractor* hereby agrees to comply with and be bound by all of the terms and conditions of the PLA and any amendments or addenda thereto. By signing this Letter of Assent (LOA), the undersigned acknowledges the PLA as the singular binding Agreement for the defined Project. The PLA, including the applicable Schedule A and this LOA shall only apply to the Project defined in the PLA and Appendix A and to no other project(s).

The LOA shall remain in effect for the duration of all work performed under the PLA, by the undersigned Employer, at the defined Project site of construction, after which this LOA and any collective bargaining relationship established therein for this Project, will terminate, without notice, and shall have no further force or effect.

FOR THE CONTRACTOR

Name of Employer: _____

License or Registration Number: _____

Are you signatory to a local or national Building Trades labor agreement: q NO or q YES

Specify the details of your company's union affiliation(s): _____

_____

Contractor Address: _____

_____

Telephone: _____ Fax: _____

Authorized Representative (Print): _____

Title: _____ Cell Phone: _____

Authorized Representative (Signature): _____

Date: _____ Witness: _____

Company Seal: _____ Notary: _____

DRAFT

SIGNATURES

IN WITNESS WHEREOF the parties have caused the Agreement to be executed and effective as the _____ day of _____ 2024.

FOR THE ROCKLAND COUNTY SOLID WASTE MANAGEMENT AUTHORITY:

_____
Gerard M. Damiani Jr., - Executive Director

FOR THE ROCKLAND COUNTY BUILDING TRADES COUNCIL:

By: _____
John Maraia President of the Rockland County Building & Construction Trades Council

By: _____
North Atlantic States Regional Council of Carpenters Local 279

By: _____
Ironworkers Local 417

By: _____
Laborers Local 754

By: _____
Bricklayers & Allied Craftworkers Local 1

By: _____
Operating Engineers Local 825

By: _____
Teamsters Local 445

By: _____
Resilient & Floor Coverers Local 2287

By: _____
International Brotherhood of Electrical Workers Local 363

By: _____
Plumbers and Pipefitters Local 373

By: _____
Sheet Metal Workers Local 38

By: _____
Asbestos Workers Local 91

DRAFT

By: _____
Glaziers & Painters District Council 9

By: _____
Boilermakers Local 5

By: _____
Metallic Lathers & Reinforcing Ironworkers Local 46

By: _____
Dockbuilders & Timberman Local 1556

By: _____
Millwrights Local 740

By: _____
Tri-State Tile, Marble & Terrazzo BAC Local 7 of NY & NJ

By: _____
Road Sprinkler Fitters Local 669

By: _____
OPCMIA Local 262

By: _____
United Cement Masons Local 780

By: _____
Roofers, Waterproofers & Allied Workers Roofers Local 8

DRAFT

APPENDIX H

CONTRACT (DRAFT)

CONTRACT
FOR THE
RENOVATION OF ROCKLAND GREEN ADMINISTRATIVE HEADQUARTERS
AND
CONSTRUCTION OF AN IMMERSIVE THEATRE EXPERIENCE
LOCATED AT
172 MAIN STREET IN NANUET, NY 10954

BETWEEN

ROCKLAND GREEN

and

[ ]

Dated as of [ ], 2025

DRAFT

TABLE OF CONTENTS

ARTICLE I. DEFINITIONS AND INTERPRETATION 5
SECTION 1.1 DEFINITIONS 5
SECTION 1.2 INTERPRETATION 13

ARTICLE II. REPRESENTATIONS AND WARRANTIES 16
SECTION 2.1 REPRESENTATIONS AND WARRANTIES OF ROCKLAND GREEN 16
SECTION 2.2 REPRESENTATIONS AND WARRANTIES OF THE CONTRACTOR 16

ARTICLE III. THE WORK AND CONTRACTOR'S OBLIGATIONS 18
SECTION 3.1 PERFORMANCE OF THE WORK 18
SECTION 3.2 NOTICE TO PROCEED 19
SECTION 3.3 CONTRACT TIME 19
SECTION 3.4 DELAY LIQUIDATED DAMAGES 19
SECTION 3.5 PROVISIONS AND PAYMENT OF LABOR, MATERIALS, EQUIPMENT 20
SECTION 3.6 MAINTENANCE OF RECORDS AND OTHER DOCUMENTS AND DRAWINGS 20
SECTION 3.7 DUTY TO EXAMINE CONTRACT DOCUMENTS 20
SECTION 3.8 QUALIFICATIONS OF PERSONNEL 21
SECTION 3.9 SUBCONTRACTORS 21
SECTION 3.10 CHANGES IN THE WORK 22
SECTION 3.11 COMPLIANCE WITH APPLICABLE LAW 22
SECTION 3.12 PERFORMANCE, INFORMATION, AND SITE CONDITION 23
SECTION 3.13 PROTECTION OF PERSONS AND PROPERTY 24
SECTION 3.14 SUPERVISION OF THE WORK. 24
SECTION 3.15 COORDINATION OF OTHER WORK 25

ARTICLE IV. COMPLETION 25
SECTION 4.1 SUBSTANTIAL COMPLETION. 25
SECTION 4.2 FINAL COMPLETION 26

ARTICLE V. CONTRACT PAYMENTS 26
SECTION 5.1 CONTRACT PRICE 26
SECTION 5.2 SCHEDULE OF VALUES 26
SECTION 5.3 APPLICATIONS FOR PAYMENT AND RETAINAGE 27
SECTION 5.4 COSTS AND COST SUBSTANTIATION 28
SECTION 5.5 CONTRACTOR PROJECT SCHEDULE AS A CONDITION OF PAYMENT 29
SECTION 5.6 PROMPT PAYMENT 29
SECTION 5.7 NO APPROVALS, CONSENTS OR WAIVERS IMPLIED IN PAYMENTS 29

DRAFT

SECTION 5.8 PAYMENT WITHHOLDING 29
SECTION 5.9 PAYMENT UPON FINAL COMPLETION 30
SECTION 5.10 FINAL PAYMENT 31

ARTICLE VI. CONTRACT ADMINISTRATION 31
SECTION 6.1 CONTRACT ADMINISTRATION 31
SECTION 6.2 SITE VISITS 31
SECTION 6.3 FAILURE TO PERFORM 31
SECTION 6.4 COMMUNICATIONS FACILITATING CONTRACT ADMINISTRATION 31
SECTION 6.5 MEETINGS 32
SECTION 6.6 REVIEW OF SUBMITTALS 32
SECTION 6.7 REJECTION OF WORK 32
SECTION 6.8 PREPARATION OF CHANGE ORDERS 32
SECTION 6.9 INSPECTIONS 32

ARTICLE VII. TERM 32
SECTION 7.1 EFFECTIVE DATE AND TERM 32

ARTICLE VIII. CHANGES TO THE WORK 33
SECTION 8.1 CHANGES TO THE WORK 33
SECTION 8.2 CHANGE ORDERS 33
SECTION 8.3 CONSTRUCTION CHANGE DIRECTIVES 33
SECTION 8.4 MINOR CHANGES IN THE WORK. 34
SECTION 8.5 CONTRACTOR'S PROPOSAL FOR CHANGE ORDERS 35
SECTION 8.6 EXECUTION OF CHANGE ORDER AS WAIVER OF CLAIM 35
SECTION 8.7 NOTIFICATION TO SURETY AS OTHERWISE REQUIRED 35
SECTION 8.8 ADDITIONAL COST FACTORS IN PRICING CHANGE ORDERS OR CONSTRUCTION CHANGE DIRECTIVES 35

ARTICLE IX. CLAIMS 36
SECTION 9.1 PROCEDURES FOR CONTRACT CLAIMS 36
SECTION 9.2 CONTRACTOR PROHIBITED FROM WITHHOLDING SERVICES 37
SECTION 9.3 CLAIMS RELATED TO SITE CONDITIONS 37
SECTION 9.4 CONDITION PRECEDENT TO LIABILITY 37
SECTION 9.5 LIMITATION OF ROCKLAND GREEN'S OBLIGATIONS FOR CLAIMS 37

ARTICLE X. EVENTS OF DEFAULT AND TERMINATION 37
SECTION 10.1 ROCKLAND GREEN'S RIGHT TO TERMINATE FOR CAUSE 37
SECTION 10.2 GROUNDS FOR TERMINATION 38
SECTION 10.3 NOTICE OF TERMINATION 39
SECTION 10.4 TERMINATION BY ROCKLAND GREEN FOR CONVENIENCE. 39
SECTION 10.5 ACTION BY CONTRACTOR AND ROCKLAND GREEN 39

DRAFT

ARTICLE XI. DISPUTE RESOLUTION AND LITIGATION 40
SECTION 11.1 MEDIATION. 40
SECTION 11.2 FORUM SELECTION AND CONSENT TO JURISDICTION, WAIVER OF RIGHT TO REMOVE 41

ARTICLE XII. INSURANCE, SECURITY FOR PERFORMANCE, INDEMNIFICATION, AND UNCONTROLLABLE CIRCUMSTANCES.....41
SECTION 12.1 REQUIRED INSURANCE 41
SECTION 12.2 SECURITY FOR PERFORMANCE..... 41
SECTION 12.3 INDEMNIFICATION BY THE CONTRACTOR 42
SECTION 12.4 UNCONTROLLABLE CIRCUMSTANCES 42

ARTICLE XIII. WARRANTY.....43
SECTION 13.1 WARRANTY 43

ARTICLE XIV. MISCELLANEOUS PROVISIONS.....45
SECTION 14.1 RELATIONSHIP OF THE PARTIES..... 45
SECTION 14.2 CERTAIN OBLIGATIONS TO SURVIVE TERMINATION..... 45
SECTION 14.3 NO WAIVERS..... 46
SECTION 14.4 ACTIONS OF ROCKLAND GREEN IN ITS GOVERNMENTAL CAPACITY..... 46
SECTION 14.5 ASSIGNMENT..... 46
SECTION 14.6 CHANGE IN OWNERSHIP OF CONTRACTOR OR A PARENT COMPANY..... 46
SECTION 14.7 BINDING EFFECT 47
SECTION 14.8 AMENDMENT AND WAIVER..... 47
SECTION 14.9 NON-DISCRIMINATION 47
SECTION 14.10 NO THIRD PARTY RIGHTS CREATED..... 47
SECTION 14.11 NOTICES..... 47
SECTION 14.12 NOTICE OF LITIGATION..... 48
SECTION 14.13 COUNTERPARTS 48
SECTION 14.14 FURTHER ASSURANCES 48

APPENDICES
APPENDIX A CONTRACT DRAWINGS 1
APPENDIX B SPECIFICATIONS 1
APPENDIX C CONTRACT PRICE 1
APPENDIX D REQUIRED INSURANCE..... 1
APPENDIX E PREVAILING WAGE SCHEDULE..... 1
APPENDIX F PROJECT SCHEDULE..... 1

Transaction Agreements

1. Performance Bond
2. Payment Bond
3. Project Labor Agreement

DRAFT

CONTRACT
FOR THE
RENOVATION OF ROCKLAND GREEN ADMINISTRATIVE HEADQUARTERS AND CONSTRUCTION OF AN IMMERSIVE THEATRE EXPERIENCE LOCATED AT 172 MAIN STREET IN NANUET, NY 10954

This Contract for the Renovation of Rockland Green Administrative Headquarters and Construction of an Immersive Theatre Experience, located at 172 Main Street in Nanuet, NY 10954 (hereinafter, the "Contract" or the "Agreement"), is made and entered into as of [ ], between the Rockland County Solid Waste Management Authority, also known as, Rockland Green, a body corporate and politic constituting a public benefit corporation of the State of New York ("Rockland Green"), and [ ], a [ ] organized and existing under the laws of the State of [ ] and duly licensed and registered with the State of New York and in accordance with Applicable Law (the "Contractor"). Capitalized terms used herein after defined in Section 1.1 hereof.

R E C I T A L S

WHEREAS, Rockland Green owns the office building located at 172 Main Street, Nanuet, NY 10954, and to intends provide interior renovations and MEP improvements to the Administrative Headquarters, and to construction a new Immersive Theatre Experience (the "Project");

WHEREAS, Rockland Green requires improvements and renovations to the office building in order to provide an upgraded and renovated office space and construction of new Immersive Theater space, including, site construction, landscaping, general exterior building construction and alterations, general interior building construction and alterations (including construction of an interior second floor level with associated elevator and stair access), interior and exterior finishes, equipment purchase and installation, fire protection, plumbing, medical gas, mechanical HVAC, and electrical, all as indicated in the Drawings and Specifications attached hereto (collectively the "Project");

WHEREAS, Rockland Green issued Request for Proposals No. 2025-01 on February 18, 2025, as modified by addenda (the "RFP"), soliciting proposals from firms qualified to perform the Work covered by this Contract as requested in the RFP;

WHEREAS, Rockland Green held a Site visit in connection with RFP, and Rockland Green provided potential Proposers with reasonable access to the Site to allow them the opportunity to conduct such inspections and reviews they deemed necessary to become familiar with the Site and to review related documentation prior to submission of the Proposals;

WHEREAS, on [ ], Rockland Green received [ ] proposals in response to the RFP; and

WHEREAS, on [ ], Rockland Green selected the Contractor, as having submitted the most advantageous proposal, to enter into this Contract; and

DRAFT

WHEREAS, the Contractor will be responsible for Work detailed herein in accordance with the terms hereof; and

NOW, THEREFORE, in consideration of the mutual covenants contained in this Contract, the Parties hereto, intending to be legally bound, agree as follows:

ARTICLE I.
DEFINITIONS AND INTERPRETATION

SECTION 1.1 DEFINITIONS. As used in this Contract the following terms shall have the meanings set forth below:

"Affiliate" means any person, corporation or other entity directly or indirectly controlling or controlled by another person, corporation or other entity or under direct or indirect common control with such person, corporation or other entity.

"Applicable Law" means those building codes referenced in the Drawings, the reference codes and standards and regulatory requirements specifically noted in the Specifications, as well as any law, rule, codes, standards, regulation, requirement, policy, consent decree, consent order, consent agreement, permit, guideline, action, determination or order of, or Governmental Approval issued by, any Governmental Body having jurisdiction, applicable from time to time to any activities associated with the subject matter of this Contract, or any other transaction or matter contemplated hereby (including, but not limited to, any of the foregoing which concern health, safety, fire, environmental protection, labor relations, mitigation monitoring plans, building codes, non-discrimination and the payment of prevailing wages).

"Application for Payment" shall have the meaning set forth in Article V hereof.

"Architect" means an architect duly designated by Rockland Green to act as such, with the powers and duties as defined in the Contract Documents for the Architect.

"Certificate of Final Completion" shall mean a document prepared by the Contractor and approved by Rockland Green, certifying that all requirements of the Contract have been satisfied and all punch list items have been resolved, and that Final Completion has been achieved.

"Change in Law" means any of the following events or conditions which has a material and adverse effect on the performance by the parties of their respective obligations under this Contract (except for payment obligations):

(A) Inclusions: A "Change in Law" shall include:

(1) the enactment, adoption, promulgation, issuance, modification or written change in administrative or judicial interpretation on or after the effective date of this Contract of any federal, State or local law (except as set forth in the exclusions in (B) below), regulation, rule, requirement, guideline, ruling or ordinance, unless such law, regulation, rule, requirement, ruling or ordinance

DRAFT

was, on or prior to the effective date of this Contract, proposed and published in the Federal or New York Register or was duly adopted, promulgated, issued or otherwise officially modified or changed in interpretation;

(2) the order or judgment of any federal, State or local court, administrative agency or Governmental Body, on or after the effective date of this Contract, to the extent such order or judgment is not the result of willful or negligent action, error or omission or lack of reasonable diligence of the Contractor or of Rockland Green, whichever is asserting the occurrence of a Change in Law; provided, however, that the contesting in good faith or the failure in good faith to contest any such order or judgment shall not constitute or be construed as such a willful or negligent action, error or omission or lack of reasonable diligence; or

(3) the denial of an application for, delay in the review, issuance or renewal of, or suspension, termination, interruption, imposition of a term, condition or requirement which is more stringent or burdensome in connection with the issuance, renewal or failure of issuance or renewal on or after the effective date of this Contract or any Governmental Approval to the extent that such denial, delay, suspension, termination, interruption or imposition materially and adversely affects the performance of this Contract, if and to the extent that such denial, delay, suspension, termination, interruption or imposition is not the result of willful or negligent action, error or omission or a lack of reasonable diligence of the Contractor or of Rockland Green, whichever is asserting the occurrence of a Change in Law; provided, however, that the contesting in good faith or the failure in good faith to contest any such denial, delay, suspension, termination, interruption or imposition shall not be construed as such a willful or negligent action, error or omission or lack of reasonable diligence.

(B) Exclusions: A "Change in Law" shall not include:

(1) a change in Applicable Law pertaining to taxes;

(2) a change in the law of any foreign country;

(3) any Change in Law (including the issuance of any Governmental Approval, the enactment of any statute, or the promulgation of any regulation) the terms and conditions of which do not impose more stringent or burdensome requirements on the Contractor than those set forth in the obligations contained herein;

(4) any change in interpretation, however stringent, by a Governmental Body of the meaning of the terms and conditions of the Governmental Approvals in force as of the effective date of this Contract;

DRAFT

(5) union work rules, demands or requirements, which modify the number of employees required to be employed and causes an increase in Contractor's projected or actual cost of providing the Contract Services; or

(6) a change in law pertaining to prevailing wages including the Prevailing Wage Law.

"Change Order" is a written instrument prepared by Rockland Green and signed by Rockland Green and Contractor stating their agreement upon all of the following: (1) a detailed description of the change in the Work which is subject of the Change Order; (2) the amount of adjustment, if any, in the Contract Price; and (3) the extent of the adjustment, if any in the Contract Time.

"Claim" is a demand or assertion by the Contractor seeking, as a matter of right, payment of money, or other relief with respect to the terms of this Contract.

"Construction Change Directive" is a written order prepared by Rockland Green, directing a change in the Work prior to agreement with the Contractor on adjustment, if any, in the Contract Price or Contract Time, or both.

"Construction and Demolition Debris" means wastes which are generated as a result of construction, remodeling or demolition activities and includes, but is not limited to, dirt, tree stumps, tree trunks, rock, brick, concrete, asphalt, drywall, roofing materials, lumber, ceiling tiles, and insulation.

"Contract" means this contract for the Renovation of Rockland Green Administrative Headquarters and Construction of an Immersive Theatre Experience, together with all appendices and any Contract Modifications thereto.

"Contract Amendment" means modification of the terms of this Contract as approved by the Rockland Green Board and signed by both Parties.

"Contract Award" means the date upon which this Contract is awarded to the Contractor, as selected pursuant to the RFP.

"Contract Date" means the date this Contract has been executed and delivered by the Parties.

"Contract Documents" means the Contract and all of its appendices, exhibits and attachments, and any Contract Modifications thereto.

"Contract Drawings" or "Drawings" means the graphic and pictorial portions of the Contract Documents showing the design, location and dimensions of the Work, generally including plans, elevations, sections, details, schedules, and diagrams, as set forth in Appendix A.

DRAFT

"Contract Modification" means a (1) Contract Amendment, (2) Change Order, (3) Contract Change Directive, or (4) other written alteration in provisions of the Contract that is accomplished by mutual action of the Parties to the Contract.

"Contract Price" or "Contract Sum" means the price to be paid by Rockland Green to the Contractor for the performance of the Contract Services, as set forth in Appendix C.

"Contract Services" means everything required to be furnished and completed for and relating to the services to be provided by the Contractor pursuant to this Contract, including, but not limited to, the Work and the provision of security for performance.

"Contract Standards" means the standards, terms, conditions, methods, techniques and practices imposed or required by: (i) Applicable Law, (ii) the Specifications, (iii) the Drawings, (iv) Good Engineering and Construction Practice, (v) Good Industry Practice, (vi) applicable equipment manufacturers' specifications, (vii) applicable Insurance Requirements, and (viii) any other standard, term, condition or requirement specifically provided herein to be observed by the Contractor.

"Contract Time" means the period of time, including authorized adjustments as addressed herein, allotted in the Contract Documents for completion of the Work.

"Contractor" means [ ].

"Contractor Fault" means the falsity of any material representation made by the Contractor under this Contract or any breach, failure, non-performance or non-compliance by the Contractor with its obligations hereunder caused by any willful or negligent act, error or omission by the Contractor, its officials, agents, employees, representatives or independent contractors or Subcontractors.

"County" means the County of Rockland, New York.

"Fees and Costs" means reasonable fees and expenses of attorneys, expert witnesses, consultants and other persons, and costs of transcripts, printing of briefs and records on appeal, copying and other reimbursed expenses, and expenses reasonably incurred in connection with any Legal Proceeding.

"Final Completion" means the date on which the Work is complete in accordance with the Contract Documents, including, but not limited to, any punch list items, start-up or commissioning services, and the submission of all documentation required by the Contract Documents.

"Good Engineering and Construction Practice" means those methods, techniques, standards and practices which, at the time they are to be employed and in light of the circumstances known or reasonably believed to exist at such time, are generally accepted as good engineering and construction practices for the engineering and construction industries as followed in the Northeast region of the United States.

DRAFT

"Good Industry Practice" means those methods, techniques, standards and practices which, at the time they are to be employed and in light of the circumstances known or reasonably believed to exist at such time, are generally accepted as good in the industry.

"Governmental Approval" means all approvals, permits, licenses, authorizations, consents, certifications, registrations, endorsements, exemptions, rulings, and entitlements issued by a Governmental Body of whatever kind and however described which are required under Applicable Law to be obtained or maintained by any person with respect to the Contract Services.

"Governmental Body" means any federal, state, regional or local legislative, executive, judicial or other governmental board, agency, authority, commission, administration, court or other body, or any official thereof having jurisdiction over the Site, the Contractor, the Work, or the Project.

"Hazardous Materials" means (a) any waste which is defined or regulated as a hazardous waste, toxic substance, hazardous chemical substance or mixture, or asbestos under Applicable Law, as amended from time to time, including, but not limited to: (1) the Resource Conservation and Recovery Act and the regulations contained in 40 CFR Parts 260-281; (2) the Toxic Substance Control Act (15 U.S.C. Section 2601 et seq.) and the regulations contained in 40 CFR Parts 761-766; and (3) future additional or substitute federal, state or local laws pertaining to the identification, treatment, storage or disposal of toxic substances or hazardous wastes; and (b) radioactive materials which are source, special nuclear or by-product material as defined by the Atomic Energy Act of 1954 (42 U.S.C. Section 2011 et seq.) and the regulations contained in 10 CFR Part 40.

"Insurance Requirement" means any rule, regulation, code, or requirement issued by any fire insurance rating bureau or any body having similar functions or by any insurance company which has issued an insurance policy as required under this Contract, as in effect during the Term of the Contract, compliance with which is a condition to the effectiveness of such policy.

"Legal Proceeding" means every action, suit, litigation, administrative proceeding, and other legal or equitable proceeding arising out of the obligations of the parties under this Contract.

"Liquidated Damages" has the meaning set forth in Section 3.4 hereof.

"Loss-and-Expense" means any and all actual losses, liabilities, forfeitures, obligations, damages, fines, penalties, judgments, deposits, costs, expenses, charges, or Taxes, including all Fees and Costs, except as explicitly excluded or limited under any provision of this Contract.

"Notice to Proceed" means a notice issued by Rockland Green for the Contractor to commence the Work as set forth in Section 3.2 hereof.

"Owner" means Rockland Green.

"Party" means Rockland Green and/or the Contractor as applicable.

"Payment Bond" means the labor and materials payment bond required under Section 12.2 hereof.

"Performance Bond" means a performance bond required under Section 12.2 hereof.

"Prevailing Wage Law" means Articles 8 and 9 of the New York Labor Law, as amended.

"Progress Schedule" means those updates to the Project Schedule provided by Contractor with each Application for Payment, and as otherwise required by Rockland Green or the Contract Documents.

"Project" means all of the collective Work covered under this Contract, performed by the Contractor and its Subcontractors to complete the Renovation of Rockland Green Administrative Headquarters and Construction of an Immersive Theatre Experience.

"Project Labor Agreement" means the agreement between Rockland Green, the Contractor, the labor unions representing Subcontractors, and non-unionized Subcontractors, governing the terms and conditions of employment for all workers on the Project, a copy of which shall be attached hereto as Transaction Agreement 3.

"Project Schedule" means the schedule set forth in Appendix F.

"Proposal" means the Contractor's response to the RFP.

"Request for Proposals" or "RFP" means Rockland Green's Request for Proposals No. 2024-01 issued July 25, 2024, for proposals for the Renovation of Rockland Green Administrative Headquarters and Construction of an Immersive Theatre Experience, including any addenda thereto.

"Required Insurance" has the meaning specified in Appendix D.

"Rockland Green" means the Rockland County Solid Waste Management Authority.

"Rockland Green Board" means the seventeen member board in which the powers of the Rockland Green Solid Waste Management Authority are vested in accordance with the New York Public Authorities Law § 2053-c, NY CLS Pub A § 2053-c.

"Rockland Green Fault" means any breach (including the falsity of any material representation made by Rockland Green under this Contract), failure, non-performance or non-compliance by Rockland Green with its obligations under this Contract to the extent not directly attributable to any Uncontrollable Circumstance or Contractor Fault that materially and adversely affects the Contractor's performance or rights or obligations under this Contract.

"Rockland Green Indemnitee" has the meaning specified in Section 12.3 hereof.

"Schedule of Values" has the meaning set forth in Section 5.2.

DRAFT

"Scheduled Substantial Completion Date" shall mean the date set for Substantial Completion, in the Project Schedule attached hereto as Appendix F, and adjusted only as set forth in this Contract.

"Security Instruments" means the Proposal Bond, Performance Bond, Labor and Materials Payment Bond and Required Insurance.

"Site" means the real property owned by Rockland Green, located at 427 Beach Road, Haverstraw, and all ancillary property up to and including the fence line, as more specifically described in Appendix A.

"Specifications" means those technical specifications for the Work set forth in Appendix B.

"State" means the State of New York.

"Subcontract" means an agreement between the Contractor and a Subcontractor, or between a Subcontractor and a sub-subcontractor, as applicable.

"Subcontractor" means every person (other than employees of the Contractor) employed or engaged by the Contractor or any person directly or indirectly in privity with the Contractor (including all subcontractors and every sub-subcontractor of whatever tier) for any portion of the Work, whether for the furnishing of labor, materials, equipment, supplies, services or otherwise.

"Submittals" means sketches, working drawings, shop drawings, studies and analysis, specifications, and calculations as required to adequately perform the Contract Services.

"Substantial Completion" means the date upon which the Work is sufficiently complete in accordance with the Contract Documents.

"Tax" or "Taxes" means any tax, fee, levy, duty, impost, charge, surcharge, assessment or withholding, or any payment-in-lieu thereof, and any related interest, penalty or addition to tax.

"Term" means the term of this Contract as set forth in Section 7.1 hereof.

"Uncontrollable Circumstance" means any act, event or condition that is beyond the reasonable control of the Party relying thereon as justification for not performing an obligation or complying with any condition required of such Party under this Contract, and that materially interferes with or materially increases the time required for performing its obligations thereunder (other than payment obligations), to the extent that such act, event or condition is not the result of the willful or negligent act, error or omission, failure to exercise reasonable diligence, or breach of this Contract on the part of such Party.

(A) Inclusions: Subject to the foregoing, Uncontrollable Circumstances shall include the following:

DRAFT

(1) a Change in Law;

(2) naturally occurring events (except weather conditions normal for the northeast region of the United States) such as landslides, underground movement, earthquakes, fires, tornadoes, floods, epidemics, and other acts of God;

(3) explosion, sabotage or similar occurrence, acts of a declared public enemy, extortion, war, terrorism, blockade or insurrection, riot or civil disturbance;

(4) the failure of any appropriate federal, State, Authority or local public agency or private utility having operational jurisdiction in the area in which the Contract Services are being provided; and

(5) acts of terror of a public enemy.

(B) Exclusions: It is specifically understood that none of the following acts, events or circumstances shall constitute Uncontrollable Circumstances:

(1) any act, event, or circumstance that would not have occurred if the affected Party had complied with its obligations hereunder;

(2) general economic conditions, interest or inflation rates, or currency fluctuation;

(3) with respect to Rockland Green, any changes in the financial condition of Rockland Green and with respect to the Contractor, any changes in the financial condition of the Contractor, or their Affiliates or Subcontractors affecting their ability to perform their respective obligations;

(4) the consequences of error, neglect or omissions by the Contractor or any of its employees, agents, suppliers, Subcontractors or Affiliates in the performance of the Contract Services;

(5) the failure of the Contractor to secure patents or licenses or similar authorizations in connection with any technology or machinery necessary to perform its obligations hereunder;

(6) strikes;

(7) labor disputes involving employees of the Contractor, its Affiliates or Subcontractors;

DRAFT

(8) any increase for any reason in premiums charged by the Contractor's insurers or the insurance markets generally for the Required Insurance; and

(9) any impact of prevailing wages, laws or rates on the Contractor's costs with respect to wages and benefits.

"Warranty" means any original equipment manufacturer's warranty, any express or implied warranty provided by Applicable Law or common application and usage in the construction industry, and the one-year warranty on workmanship provided by the Contractor for the Work, as further detailed in Article XIII.

"Warranty Period" means the period commencing on the date of Final Completion and continuing through one-year unless otherwise extended as provided herein.

"Work" means all of the work required to be performed by the Contractor under this Contract, all in accordance with the Contract Documents.

SECTION 1.2 INTERPRETATION. In this Contract, unless the context otherwise requires:

A. References Hereto. The terms "hereby," "hereof," "herein," "hereunder" and any similar terms refer to this Contract, and the term "hereafter" means after, and the term "heretofore" means before the Contract Date.

B. Gender and Plurality. Words of the masculine gender mean and include correlative words of the feminine and neuter genders and words importing the singular number mean and include the plural number and vice versa.

C. Persons. Words importing persons include firms, companies, associations, general partnerships, limited partnerships, trusts, business trusts, corporations and other legal entities, including public bodies, as well as individuals.

D. Headings. Any headings preceding the text of the sections and subsections of this Contract shall be solely for convenience of reference and shall not constitute a part of this Contract, nor shall they affect its meaning, construction or effect.

E. Entire Agreement. This Contract contains the entire agreement between the parties hereto with respect to the transactions contemplated by this Contract and nothing in this Contract is intended to confer on any person other than the parties hereto and their respective permitted successors and assigns hereunder any rights or remedies under or by reason of this Contract. Without limiting the generality of the foregoing, this Contract shall completely and fully supersede all other understandings and agreements among the parties with respect to such transactions.

F. Standards of Workmanship and Materials. Any reference in this Contract to materials, equipment, systems or supplies (whether such references are in lists, notes, design requirements, schedules, or otherwise) shall be construed to require the Contractor to furnish the same in accordance with the grades and standards indicated in this Contract. Where this Contract does not specify any explicit quality or standard for materials or workmanship, the Contractor shall

DRAFT

use only workmanship and new materials of a quality consistent with that of the requirements for workmanship and materials specified in this Contract.

G. Technical Standards and Codes. References in this Contract, including the Specifications in particular, to all professional and technical standards and codes are to the most recent published professional and technical standards and codes of the institute, organization, association, authority or society specified, all as in effect as of the Contract Date. Unless otherwise specified to the contrary, (1) all such professional and technical standards and codes shall apply as if incorporated herein, and (2) if any material revision occurs, to the Contractor's knowledge, after the Contract Date, the Contractor shall notify Rockland Green.

H. Governing Law. This Contract shall be governed by and construed in accordance with the applicable laws of the State of New York, and disputes between the parties shall be handled in the manner provided herein.

I. Severability. If any clause, provision, subsection, or Section or Article of this Contract shall be ruled invalid by any court of competent jurisdiction, then the parties shall: (1) promptly meet and negotiate a substitute for such clause, provision, subsection, Section or Article, (2) if necessary or desirable to accomplish item (1) above, apply to the court having declared such invalidity for a judicial construction of the invalidated portion of this Contract; and (3) negotiate such changes in, substitutions for or additions to the remaining provisions of this Contract as may be necessary in addition to and in conjunction with items (1) and (2) above to effect the intent of the parties in the invalid provision. The invalidity of such clause, provision, subsection, Section or Article shall not affect any of the remaining provisions hereof and this Service Contract shall be construed and enforced as if such invalid portion did not exist.

J. Causing Performance. A party shall itself perform, or shall cause to be performed, subject to any limitations specifically imposed hereby with respect to Subcontractors or otherwise, the obligations affirmatively undertaken by such party under this Contract.

K. Party Bearing Cost of Performance. All obligations undertaken by each Party hereto shall be performed at the cost of the Party undertaking the obligation or responsibility, unless the other Party has explicitly agreed herein to bear all or a portion of the cost either directly, by reimbursement to the other party or through an adjustment to the Contract Price.

L. Cost of Performing Excludes Cost from Legal Proceeding. The "cost of performing" a Party's obligations hereunder, when used with respect to one Party's obligation to pay additional costs incurred by the other Party, shall not include any Loss-and-Expense incurred by the Party resulting from any third-party Legal Proceeding. Notwithstanding the foregoing, each Party retains its rights to bring any Legal Proceeding or to implead the other Party as to any matter arising hereunder.

M. Assistance. The obligations of a Party to cooperate with, to assist or to provide assistance to the other Party hereunder shall be construed as an obligation to use the Party's personnel resources to the extent reasonably available in the context of performance of their normal duties, and not incur material additional overtime or third party expense unless requested and reimbursed by the assisted Party.

N. Interpolation. If any calculation hereunder is to be made by reference to a chart or table of values, and the reference calculation falls between two stated values, the calculation shall be made on the basis of linear interpolation.

O. Delivery of Documents in Digital Format. The Contractor agrees that all documents required to be delivered under this Contract shall be submitted to Rockland Green both in printed form (in the number of copies indicated) and, at Rockland Green's request, in digital form.

P. References to Including. All references to "including" herein shall be interpreted as meaning "including without limitation."

Q. References to Days. All references to days herein are to calendar days, including Saturdays, Sundays and holidays, except as otherwise specifically provided.

R. References to Knowledge. All references to "acknowledge," "knowing," "know" or "knew" shall be interpreted as references to a party having actual knowledge.

S. Contract Documents and Conflicts. The Contract Documents, including any subsequent, duly authorized modification of the Contract Documents, comprise the entire and exclusive agreement between the Parties with reference to the Contract Services, and said Contract Documents supersede any and all prior discussions, communications, representations, understandings, negotiations, or agreements. With respect to a conflict, error, or discrepancy within or amongst the Contract Documents, the interpretation most favorable to Rockland Green shall apply.

T. Anything that may be required, implied or reasonably inferred by the Contract Documents which make up this Contract, or any one or more of them, shall be provided by the Contractor for the Contract Price.

U. Nothing contained in the Contract Documents shall create, nor be interpreted to create, privity or any other relationship whatsoever between Rockland Green and any person except the Contractor.

V. When a word, term, or phrase is used in this Contract, it shall be interpreted or construed first, as defined herein; second, if not defined, according to its generally accepted meaning in the construction industry; and third, if there is no generally accepted meaning in the construction industry, according to its common and customary usage.

W. Wherever this Contract calls for "strict" compliance or conformance with the Contract Documents as to matters other than compliance with time limits, providing an updated Project Schedule, and Claim and Change Order procedures, the term shall mean within tolerances as described specifically in the Contract Documents, or if not specifically described, within industry standards and tolerances for deviation for the specific item or procedure in question.

X. The listing herein of any items as constituting a material breach of this Contract shall not imply that any other, non-listed item will not constitute a material breach of this Contract.

Y. Each and every provision of law and clauses required by law to be inserted in this Contract shall be deemed to be inserted herein, and the Contract shall be read and enforced as though it were included herein, and if through mistake, or otherwise, any such provision is not inserted, or is not correctly inserted, then upon the application of either Party, the Contract shall forthwith be physically amended to make such insertion.

ARTICLE II.
REPRESENTATIONS AND WARRANTIES

SECTION 2.1 REPRESENTATIONS AND WARRANTIES OF ROCKLAND GREEN. Rockland Green represents and warrants that:

A. Existence and Powers. Rockland Green is a body politic and corporate constituting a public benefit corporation of the State, with full legal right, power and authority to enter into and perform its obligations under this Contract.

B. Due Authorization and Binding Obligation. Rockland Green and the Rockland Green Board have duly authorized the execution and delivery of this Contract. This Contract has been duly executed and delivered by Rockland Green and constitutes a legal, valid and binding obligation of Rockland Green, enforceable against Rockland Green in accordance with its terms except insofar as such enforcement may be limited by bankruptcy, insolvency, or other similar laws affecting creditors' rights in effect and by equitable principles of general application.

C. No Conflict. The execution, delivery or performance by Rockland Green of this Contract does not conflict with, violate or result in a breach of any law or governmental regulation currently in effect applicable to Rockland Green or any term or condition of any judgment, decree, agreement or instrument to which Rockland Green is a party or by which Rockland Green or any of its properties or assets are bound or constitutes a default under any of the foregoing.

D. No Approvals Required. No approval, authorization, order or consent of, or declaration, registration or filing with, any Governmental Body is required for the valid execution and delivery of this Contract by Rockland Green or the performance of its payment obligations hereunder except as such have been duly obtained or made.

E. No Legal Prohibition. Rockland Green has no knowledge of any Applicable Law in effect on the date as of which this representation is being made which would prohibit the performance by Rockland Green of this Contract and the transactions contemplated hereby.

F. Information Pertaining to the Site. To the best of its knowledge, Rockland Green has made available to the Contractor significant studies, reports and other information pertaining to the Site which Rockland Green has developed in connection with its planning and preparation work with respect to the RFP and which, in Rockland Green's opinion, may reasonably be material to the performance by the Contractor of the Contract Services. Rockland Green makes no representation, however as to the accuracy or completeness of any such information.

G. Title to the Site. Rockland Green owns, or is expressly authorized to use, all of the assets, improvements and other interests comprising the Site, and has all necessary right, power and authority to provide Contractor access thereto as provided in this Contract for the purpose of performing the Contract Services.

SECTION 2.2 REPRESENTATIONS AND WARRANTIES OF THE CONTRACTOR. Contractor hereby represents and warrants that:

DRAFT

A. Qualification. The Contractor is fully qualified to act as the general contractor for the Contract Services and it has and its employees and Subcontractors have, and shall maintain, any and all licenses, permits or other authorizations necessary to perform the Work.

B. Site Familiarity. The Contractor has become familiar with the Site and facilities and the local conditions under which the Work is to be constructed and operated and the Contractor represents that the Work can be performed as described in the Contract Documents and for the Contract Price.

C. Existence and Powers. The Contractor is duly organized and validly existing as a [ ] under the laws of [ ], with full legal right, power and authority to enter into and perform its obligations under this Contract, and duly licensed and registered with the State of New York and in accordance with Applicable Law.

D. Contract Documents. The Contractor has received, reviewed, and examined all of the documents which make up the Contract Documents, and has found them to the best of its knowledge, to be complete, accurate, adequate, consistent, coordinated and sufficient for the Project and Contractor has based its Contract Price for the Work upon its complete understanding of the requirements of the Contract Documents. The Contractor acknowledges that with respect to any conflict, error or discrepancy within or amongst the Contract Documents, the interpretation most favorable to Rockland Geren shall apply.

E. Due Authorization and Binding Obligation. The Contractor has duly authorized the execution and delivery of this Contract. This Contract has been duly executed and delivered by the Contractor and constitutes the legal, valid and binding obligation of the Contractor, enforceable against the Contractor in accordance with its terms except insofar as such enforcement may be affected by bankruptcy, insolvency, moratorium and other laws affecting creditors' rights generally.

F. No Conflict. The execution, delivery and performance by the Contractor of this Contract does not conflict with, violate or result in a breach of any law or governmental regulation applicable to the Contractor or any term condition of any judgment, decree, agreement (including, without limitation, the Contractor's certificate of incorporation) or instrument to which the Contractor is a party or by which the Contractor or any of its properties or assets are bound, or constitutes a default under any of the foregoing.

G. No Approvals Required. No approval, authorization, order or consent of, or declaration, registration or filing with, any Governmental Body is required for the valid execution and delivery of this Contract by the Contractor or the performance of its payment or other obligations hereunder except as such have been duly obtained or made.

H. No Litigation. There is no legal proceeding, at law or in equity, before or by any court, pending or, to the Contractor's knowledge, threatened against the Contractor which could reasonably be expected to have a material and adverse effect on the execution or delivery of this Contract or the validity or enforceability of this Contract or on the ability by the Contractor to perform any of its obligations hereunder.

I. No Legal Prohibition. The Contractor has no knowledge of any Applicable Law in effect on the date as of which this representation is being made which would prohibit the performance by the Contractor of this Contract and the transactions contemplated hereby.

J. Patents and Licenses. The Contractor owns, or is expressly authorized to use under patent rights, licenses, franchises, trademarks or copyrights, the technology necessary for the Contract Services without any known material conflict with the rights of others.

K. Information Supplied by the Contractor. The information supplied and representations and warranties made by the Contractor in all submittals made in response to the RFP and in all post-proposal submittals, if any, with respect to the Contractor (and to the best of its knowledge, all information supplied in such submittals with respect to any Subcontractor) are true, correct and complete in all material respects.

L. Compliance. The Contractor represents and warrants that as of the Contract Date the Contractor is in compliance with all laws, regulations, rules and orders applicable to its respective business, noncompliance with which would have a material and adverse effect upon its business or its ability to perform its respective obligations under this Contract.

M. Notice of Default. The Contractor shall provide to Rockland Green, promptly following the receipt thereof, copies of any notice of default, breach or noncompliance received under or in connection with any Applicable Law, Governmental Approval, or Subcontract pertaining to this Contract.

N. Familiarity with Applicable Law. The Contractor is familiar with and is satisfied as to all Applicable Law, including federal, state, and local laws and regulations that may affect cost, progress, and performance of the Contract Services.

O. Provision of Conflicts, Errors, Ambiguities and Discrepancies. As further described in Section 3.7 hereof, the Contractor shall have a continuing duty to read, examine, review, compare and contrast each of the documents comprising the Contract (including Drawings and other Submittals). The Contractor has given Rockland Green written notice of all conflicts, errors, omissions, ambiguities, or discrepancies that Contractor has discovered in the Contract Documents, and the written resolution thereof by Rockland Green is acceptable to Contractor. If Contractor discovers any conflicts, errors, omissions, ambiguities, or discrepancies in the Contract Documents while performing the Contract Services, Contractor warrants that it shall immediately bring such conflict, error, omission, ambiguity or discrepancy to Rockland Green's attention in writing. The express or implied approval by Rockland Green of any Submittals shall not relieve the Contractor of the continuing duties imposed hereby, nor shall any such approval be evidence of the Contractor's compliance with this Contract.

ARTICLE III.
THE WORK AND CONTRACTOR'S OBLIGATIONS

SECTION 3.1 PERFORMANCE OF THE WORK. The Contractor shall perform all of the Work required, implied or reasonably inferable from the Contract Documents. The Contractor will complete the Work described in the Contract Documents, in accordance with the terms herein, as may be amended by written agreement of the Parties from time to time, for the Contract Price. All Work shall strictly conform to the requirements of the Contract Documents. The Contractor shall be solely responsible for and have control over means, methods, techniques, sequences, and procedures and for coordinating all portions of the Work. The Contractor shall also be responsible, in accordance with Section 3.13, for developing a Site safety plan, and in accordance with Section 3.15, for coordinating all Work performed on the Project, and for updating and maintaining the Project Schedule.

DRAFT

SECTION 3.2 NOTICE TO PROCEED.

A. Conditions Precedent to Notice to Proceed. The Notice to Proceed will be issued on or within five (5) days of the Contract Date by Rockland Green, provided that the Contractor has satisfied the following conditions:

(i) executed the Project Labor Agreement;

(ii) provided proof of Required Insurance to Rockland Green;

(iii) provided the Security Instruments to Rockland Green;

(iv) submitted a final Project Schedule that is agreed upon by the Parties;

(v) provided any other Submittals required by the Contract Documents as a condition to the Notice to Proceed; and

(vi) provided evidence to Rockland Green's satisfaction, that it has placed any advance orders as directed by Rockland Green.

SECTION 3.3 CONTRACT TIME. The Contractor shall commence work on the day specified in the Notice to Proceed and shall accomplish Substantial Completion by the Scheduled Substantial Completion Date, as adjusted only in accordance with this Contract. By signing this Contract, the Contractor agrees that the Contract Time is a reasonable time for accomplishing completion of the Work. The Contractor shall proceed expeditiously with adequate forces and shall achieve Substantial Completion within the Contract Time. The Contract Time shall not be adjusted for increases in the Contract Time caused by Rockland Green's suspension, delay or interruption if the performance is, was or would have been so suspended, delayed or interrupted by another cause for which the Contractor is responsible or if the adjustment is made or denied under another provision of this Contract. The Contractor shall in no event be entitled to any damages or other compensation, recovery or relief due or related to any delay or suspension of the Project or component thereof, except only for a reasonable extension of Contract Time for performance, which shall be the Contractor's sole and exclusive remedy in the event of any such delay or suspension.

SECTION 3.4 DELAY LIQUIDATED DAMAGES. Time is of the essence in the performance and completion of the Work and the Contractor shall work diligently, using such means and methods of construction as will assure Substantial Completion is achieved by the Scheduled Substantial Completion Date and that Final Completion is achieved by the date agreed upon therefore in the Project Schedule. Except as otherwise excused due to Uncontrollable Circumstances or Rockland Green Fault, the Contractor shall pay daily Liquidated Damages to Rockland Green commencing on the 45th day after the Scheduled Substantial Completion Date, if Substantial Completion has not been achieved by then. Such Liquidated Damages shall be two thousand dollars ($2,000/day). Except as otherwise excused due to Uncontrollable Circumstances or Rockland Green Fault, the Contractor shall pay an additional one thousand dollars per day ($1,000/day) in daily Liquidated Damages to Rockland Green commencing on the 45th day after the date set for Final Completion in the Project Schedule, for each day after that date, if Final Completion has not been achieved by then. The Contractor shall also indemnify Rockland Green

DRAFT

in accordance with and subject to the limitations set forth in Section 12.3 hereof against all Loss-and-Expense resulting from any Legal Proceeding originated by any third-party arising from such failure to complete the Work except to the extent such failure is caused by an Uncontrollable Circumstance. The amount of Liquidated Damages owed by the Contractor may be retained by Rockland Green out of monies which are or may become due hereunder.

SECTION 3.5 PROVISIONS AND PAYMENT OF LABOR, MATERIALS, EQUIPMENT AND GOVERNMENTAL APPROVALS. The Contractor shall provide and pay for all labor, supervision, services, materials, supplies, equipment, machinery, fixtures, appliances, facilities, tools, transportation, storage, disposal, power, fuel, heat, light, cooling, or other utilities, required for performance of the Work, whether temporary or permanent and whether or not incorporated or to be incorporated in the Work. Contractor shall obtain, at its sole cost, all Governmental Approvals that are required for the Work and ensure the prompt payment for each of these obligations.

SECTION 3.6 MAINTENANCE OF RECORDS AND OTHER DOCUMENTS AND DRAWINGS.

A. Maintenance of Updated Contract Documents at Site. The Contractor shall keep an updated copy of the Contract Documents at the Site. Additionally, the Contractor shall keep a copy of approved Drawings and other Submittals at the Site. All of these items shall be available to Rockland Green during all regular business hours. The Contractor shall ensure the creation and maintenance of a detailed and comprehensive copy of the Drawings, Specifications, addenda, Change Orders and other modifications depicting the Work. Said items shall be submitted to Rockland Green, along with other required Submittals upon Final Completion of the Work, or as otherwise provided in the Contract Documents, and receipt of same by Rockland Green shall be a condition precedent to final payment to the Contractor.

B. Review and Delivery of Submittals. The Contractor shall have the duty to carefully review, inspect, examine, and physically stamp and sign any and all Submittals before submission of same to Rockland Green. The delivery of Submittals shall constitute a representation by the Contractor that it has verified that such Submittals meet the requirements of the Contract Documents, including field measurements, materials, and field construction criteria related thereto. Rockland Green's approval of any Submittal shall not relieve the Contractor of its responsibility and liability for errors or omissions set forth in Submittals. The Contractor shall not perform any Work for which the Contract Documents require a Submittal unless the respective Submittal has been approved in writing by Rockland Green.

SECTION 3.7 DUTY TO EXAMINE CONTRACT DOCUMENTS. The Contractor has a continuing duty to, and shall carefully, examine all figures and dimensions on the Contract Drawings and Specifications and shall note all conflicts, errors, omissions, ambiguities or discrepancies. The Contractor will be held responsible for any conflict, error or discrepancy not discovered before the Work is executed, unless the Contractor could not have reasonably known about the conflict, error or discrepancy. The Contractor has given Rockland Green written notice of all conflicts, errors, omissions, ambiguities or discrepancies that Contractor has discovered in the Contract Documents, and the written resolution thereof by Rockland Green is acceptable to Contractor. If the Contractor discovers any conflicts, errors, omissions, ambiguities or discrepancies in the Contract Documents while performing the Contract Services, the Contractor

warrants that it shall immediately bring such conflict, error, omission ambiguity or discrepancy to the Rockland Green's attention in writing. The express or implied approval by Rockland Green of any drawings or other Submittals shall not relieve the Contractor of the continuing duties imposed hereby, nor shall any such approval be evidence of the Contractor's compliance with this Contract. The Contractor shall not alter Specifications, Contract Drawings or figures, or make any alterations in or additions to the quantity, character or arrangement of the materials or Work, whether same shall involve additional expense or not, unless same shall be agreed upon first, in writing, as a Change Order or is included in a Construction Change Directive. This provision, however, shall not abridge in any way Rockland Green's rights as to the interpretation of the Specifications, plans and figures thereon. The divisions and sections of the Specifications and the identification of any Drawings shall not control the Work of the Contractor in dividing the Work among Subcontractors or suppliers or delineating the Work to be performed by any specific trade. The division of the Specifications are complementary and anything mentioned or shown in a division of the Specifications or in a specific trade drawing shall be of like effect as if shown in all divisions of the Specifications and in all drawings. In all cases figured dimensions shall govern over scaled dimensions, detail drawings shall govern over general drawings, larger scale details take precedence over smaller scale drawings, change order drawings govern Contract Drawings, and Contract Drawings govern over standard or shop drawings. Further, in all cases where details in two drawings conflict or where drawings and Specifications conflict, the more restrictive or stringent requirement shall be binding upon the Contractor except as otherwise authorized by Rockland Green in writing.

SECTION 3.8 QUALIFICATIONS OF PERSONNEL. The Contractor shall provide experienced and qualified personnel to provide the Contract Services, and all persons engaged by the Contractor, including any Subcontractors, for the Work shall have requisite skills, licensing and training for the tasks assigned. The Contractor shall provide Rockland Green documentation that its employees, and its Subcontractors, are properly trained in performing the Work, including, but not limited to, certificates, and licenses to operate specific classes of vehicles, machinery, equipment, tools and safety protection. The Contractor shall enforce discipline and good order at all times among the Contractor's employees and all Subcontractors.

SECTION 3.9 SUBCONTRACTORS. Contractor and its Subcontractors must execute the Project Labor Agreement (which shall be attached hereto as Transaction Agreement 3), and remain subject to the Project Labor Agreement during the Term of this Contract. Rockland Green shall have the right to approve any and all Subcontractors. Contractor must submit all information regarding Subcontractors as required by Rockland Green and obtain Rockland Green's written approval prior to the Subcontractor performing any portion of the Work. Rockland Green's approval process for Subcontractors shall not constitute a reason for any delay in Contractor's performance of the Work. The Contractor shall require all of its Subcontractors working at the Site to secure and maintain the Required Insurance and other financial sureties required by Applicable Law in connection with their presence at the Site and the performance of their duties. The Contractor shall negotiate and execute any and all Subcontracts with Subcontractors as may be necessary for the Contractor to fulfill its obligations under this Contract and as are approved by Rockland Green in writing. Subcontracts with Subcontractors and purchase orders shall include language that makes them assignable, upon Rockland Green's election, to Rockland Green upon termination of this Contract. The Contractor shall not enter into a Subcontract with any Subcontractor to whom Rockland Green reasonably objects. The basis of Rockland Green's

reasonable objection to a proposed Subcontractor includes, but is not limited to, evidence existing or arising that the proposed Subcontractor is unable or unwilling to comply with the Contract Documents or Rockland Green's conclusion that the proposed Subcontractor does not have the requisite experience or is unqualified to complete the work proposed to be performed by such entity. If at any time Rockland Green objects to a Subcontractor, the Contractor shall solicit proposals from potential replacements and shall submit the names of the replacement Subcontractor to Rockland Green for approval without an increase in the Contract Price or change in Contract Time. The Contractor shall retain full responsibility to Rockland Green under this Contract for all matters notwithstanding the execution or terms and conditions of any Subcontract. No failure of any Subcontractor used by the Contractor in connection with the provision of the Work shall relieve the Contractor from its obligations hereunder. The Contractor shall pay or cause to be paid to all direct Subcontractors all amounts due in accordance with their respective Subcontracts and Applicable Law. No Subcontractor shall have any right against Rockland Green for labor, services, materials or equipment furnished. The approval or withholding thereof by Rockland Green of any Subcontractor shall not create any liability of Rockland Green to the Contractor, to third parties or otherwise.

SECTION 3.10 CHANGES IN THE WORK. Changes in the Work may be accomplished after execution of this Contract, and without invalidating this Contract, by Change Order, Construction Change Directive or order for a minor change in the Work, as detailed in Article VIII and subject to the limitations stated in the Contract Documents.

SECTION 3.11 COMPLIANCE WITH APPLICABLE LAW.

A. Compliance with Contract Standards. The Contractor shall perform the Contract Services in accordance with the Contract Standards.

B. Governmental Approvals Necessary for Contract Services. The Contractor shall, at its sole cost and expense, make all filings, applications and reports necessary to obtain and maintain all Governmental Approvals required to be made, obtained or maintained under Applicable Law in connection with the performance of the Contract Services and shall comply with all conditions and requirements of all Governmental Approvals. Rockland Green shall cooperate with the Contractor in connection with the foregoing undertaking, and shall provide the Contractor with such relevant data or documents as are within its control, which are reasonably required for such purpose.

C. Prevailing Wage Law. All Work shall be subject to the Project Labor Agreement and performed in accordance the Prevailing Wage Law. The prevailing wage schedule contained in Appendix E sets forth the prevailing wage and benefits schedule for the Work as of the Contract Date. It shall be the Contractor's responsibility to ensure that prevailing wages and benefits are paid as required pursuant to the Prevailing Wage Law throughout the Term and to ensure that all Subcontractors comply with the Prevailing Wage Law. Any increase to wages and benefits pursuant to the Prevailing Wage Law which the Contractor is required to pay during the Term shall not affect the Contract Price. Certified payrolls and other relevant information shall be furnished to Rockland Green with each Application for Payment in compliance with the Prevailing Wage Law.

D. NYHRL. Contractor shall have in place sexual harassment policies that are compliant with the New York Human Rights Law ("NYHRL"), and shall provide annual training to all of their employees in accordance with the NYHRL.

SECTION 3.12 PERFORMANCE, INFORMATION, AND SITE CONDITION.

A. Practicability of Performance. The Contractor, in the performance of the Contract Services set forth herein, shall have exclusive responsibility for compliance with the Contract Standards. The Contractor assumes the risk of the practicability and possibility of performance of the Contract Services. No impracticability or impossibility of any of the foregoing shall be deemed to constitute an Uncontrollable Circumstance. The Contractor acknowledges that the Contractor's agents and representatives have visited, inspected and are familiar with the Site and that the Contractor is familiar with all local and other conditions which may be material to the Contractor's performance of its obligations under this Contract. The execution of this Contract shall be deemed to constitute the granting of a license to the Contractor to access the Site for the purposes of preparing for any and all obligations hereunder.

B. Rockland Green-Supplied Information. The Contractor shall be responsible for the independent verification and confirmation of all information supplied to it by or on behalf of Rockland Green. No error or omission in any such information shall constitute an Uncontrollable Circumstance or relieve the Contractor from any of its obligations or entitle the Contractor to any increase in compensation or extension of time hereunder. Any information supplied by Rockland Green is only for the Contractor's convenience, and Rockland Green makes no representations as to the accuracy or completeness thereof.

C. Site Conditions. The Contractor has conducted analyses of the Site as necessary to prepare for and perform the Work in accordance with this Contract.

D. Rockland Green Monitoring. Rockland Green shall have the right, but not the obligation, to monitor the Contractor's performance of the Work during the Term of this Contract; provided, however, such monitoring shall not relieve the Contractor of any of its obligations under this Contract.

E. Hazardous Materials. The Contractor is responsible for compliance with any requirements included in the Contract Documents regarding Hazardous Materials. If the Contractor encounters a Hazardous Material not addressed in the Contract Documents and if reasonable precautions will be inadequate to prevent foreseeable bodily injury or death to persons resulting from a Hazardous Material, including but not limited to asbestos or polychlorinated biphenyl (PCB), encountered on the site by the Contractor, the Contractor shall, upon recognizing the condition, immediately stop Work in the affected area and notify the Rockland Green of the condition. Rockland Green shall not be responsible for Hazardous Materials the Contractor brings to the Site. The Contractor shall reimburse Rockland Green for the cost and expense Rockland Green incurs (1) for remediation of Hazardous Materials the Contractor brings to the Site and negligently handles, or (2) where the Contractor fails to perform its obligations under this section.

F. Hours of Work. Hours of work will be set forth in the Project Labor Agreement. No delays resulting from compliance with the Contract Standards, including Applicable Laws or regulations or conditions of any Governmental Approvals may form the basis for any Claim by the Contractor for delay damages or additional compensation or for any increase in the Contract Time. Any delays arising from restrictions related to the use of occupied facilities

DRAFT

are non-compensable and any requests for an increase in the Contract Time relating to them must be filed in accordance with Article VIII (Change Orders) or the same will be conclusively deemed to have been waived. Notwithstanding any other provisions of this Contract, Rockland Green may order the Contractor to suspend work for any continuing violation of this section.

SECTION 3.13 PROTECTION OF PERSONS AND PROPERTY.

A. Safety Programs and Precautions. It shall be the sole responsibility of the Contractor to develop, initiate, continue and supervise all safety programs and precautions in the performance of the Work under this Contract at all times. The Contractor shall also prepare and maintain a Site safety plan in connection with its duties hereunder. The Contractor shall take full, reasonable and necessary precautions for the safety of, and shall provide reasonable protection to prevent damage, injury or loss to its employees, Subcontractors' employees, employees of Rockland Green, and members of the public, the Work itself, and other property and work at the Project Site or adjacent thereto. As part of the Contractor's obligations hereunder, the Contractor shall erect and maintain reasonable safeguards, barriers, signs, warnings, and any other safety measure required by Applicable Law and in accordance with Good Engineering and Construction Practice, Good Industry Practice, and any other Contract Standards. The Contractor shall also implement appropriate protective institutional controls during construction for the marshy/wetland area that is identified in the Drawings.

B. Contractor Remedies. The Contractor shall promptly remedy loss or damage to the Work or any person or property described herein caused in whole or in part by the acts of the Contractor or any Subcontractor, sub-subcontractor or material man, which shall include repair or replacement at Rockland Green's direction. Rockland Green may direct the Contractor to remedy violations of Applicable Law related to safety when and if observed on the Site. However, through exercising this authority Rockland Green shall not incur any obligations to monitor, initiate, continue, or supervise safety programs and precautions such to diminish the Contractor's exclusive role in same. Rockland Green shall have the right to report suspected safety violations to the Occupational Safety and Health Administration.

SECTION 3.14 SUPERVISION OF THE WORK.

A. Contractor Responsibility. The Contractor shall strictly and constantly supervise the Work and bear full responsibility for any and all acts, errors or omissions of those engaged in the Work on behalf of the Contractor, including, but not limited to, all Subcontractors and their employees. The Contractor shall be responsible to Rockland Green for acts and omissions of the Contractor's employees, Subcontractors and their agents and employees, and other persons or entities performing portions of the Work for, or on behalf of the Contractor or any of its Subcontractors.

B. Supervisory Personnel. The Contractor shall maintain an on-Site superintendent at all times while any portion of the Work is being performed. The superintendent shall represent the Contractor, and communications given to the superintendent shall be as binding as if given to the Contractor. The Contractor shall not change the superintendent without Rockland Green's written consent, which shall not unreasonably be withheld or delayed. The Contractor shall employ and maintain at the Site only competent, qualified full-time supervisory personnel, augmented with part-time and offsite supervision, approved by Rockland Green in writing.

SECTION 3.15 COORDINATION OF OTHER WORK. The Contractor shall coordinate the work performed on the Site for the Project, in accordance with the Specifications, and shall be responsible for updating and maintaining the Project Schedule and Site safety plan. Such coordination includes: (1) providing a Progress Schedule with each Application for Payment; (2) coordinating activities on the Project Site (including parking, movement of traffic, deliveries, and laydown areas); and (3) ensuring Project safety and supervision as set forth in Sections 3.13 and 3.14 above. The Contractor must also cooperate in coordinating its Work with the work of Rockland Green, its operators, subcontractors, other contractors, and any other forces permitted by Rockland Green to perform work at the Site, or enter the Site, without an increase in the Contract Time or the Contract Price. The Contractor must provide written notice to Rockland Green of any conflicts and disputes in the coordination or scheduling of work in accordance with the provisions set forth in Section 6.4 hereof. The Contractor shall be responsible for inspection of portions of Work already performed to determine that such portions are in proper condition to receive subsequent work.

ARTICLE IV.
COMPLETION

SECTION 4.1 SUBSTANTIAL COMPLETION.

A. Substantial Completion. Substantial Completion shall be achieved when all of the following conditions have been satisfied as determined by Rockland Green:

(i) Rockland Green confirms in writing that the Contractor has substantially completed its Work in conformance with the Specifications;

(ii) The Contractor has completed the Contract Services to the point where Rockland Green can take beneficial use of the area described in the Contact Documents;

(iii) The Contractor has obtained any approvals required by the Contract Documents and such approvals have not been withdrawn, revoked, superseded, suspended, or materially impaired or amended;

(iv) The Contractor and Rockland Green have developed a written punch list in accordance with the Specifications;

(v) Rockland Green has received and indicated, in writing, that it has no objection to the certification by the Contractor that all Contract Services, excepting the items on the punch list, are complete and in all respects are in compliance with the Contract;

(vi) The Contractor has delivered to Rockland Green a Claims statement setting forth in detail all Claims of every kind whatsoever of the Contractor connected with, or arising out of, the Contract Services pertaining to the Work, and arising out of or based on events prior to the date when the Contractor provides such statement to Rockland Green;

(vii) The Contractor shall certify that all Subcontractors and material suppliers have been paid in full and upon Rockland Green's request will provide any discharge or other proof of satisfaction of liens or wage claims; and

DRAFT

(viii) The Contractor has submitted written certification that all of the foregoing conditions have been satisfied and Rockland Green has received and indicated, in writing, that it has no objection to the Contractor's certification.

B. Alternative Substantial Completion. Alternatively, Substantial Completion shall occur on any date certified by Rockland Green in writing, which shall have discretion to waive any of the foregoing conditions. Waiver of any conditions for Substantial Completion shall not relieve the Contractor from its obligation to complete the Work in accordance with the Contract Standards prior to Final Completion and shall not be deemed a waiver of any Claim by Rockland Green.

C. When the Work or designated portion thereof if substantially complete, Rockland Green will prepare a certificate of Substantial Completion that shall establish the date of Substantial Completion.

SECTION 4.2 FINAL COMPLETION. Contractor shall complete all of the Work and all punch list by the date set forth in the Project Schedule for Final Completion The Contractor shall notify Rockland Green in writing when it believes it has achieved Final Completion. Thereupon, Rockland Green will perform a final inspection of the Work in accordance with the Specifications. If Rockland Green concurs that (i) the Work is complete and in full accordance with the Contract Documents, and (ii) the Contractor has performed all of its obligations to Rockland Green hereunder, Rockland Green will direct the Contractor to furnish a Certificate of Final Completion and a final Application for Payment for Rockland Green's written approval. The final Application for Payment to Rockland Green shall certify to Rockland Green that the Work is complete and the Contractor is entitled to the remainder of the unpaid Contract Price, less any amount withheld pursuant to the Contract Documents. If Rockland Green reasonably determines that final approval for payment should not be issued and is required to repeat the final inspection of the Work, the Contractor shall bear the cost of such repeat inspection(s), which costs may be deducted by Rockland Green from the Contractor's final payment. No Claim by the Contractor for an adjustment hereunder shall be allowed if asserted after final payment under this Contract.

ARTICLE V.
CONTRACT PAYMENTS

SECTION 5.1 CONTRACT PRICE. Rockland Green will pay the Contractor the Contract Price set forth in Appendix C hereto, in exchange for the Contractor's complete performance of the Contract Services, in accordance with this Contract. The Contractor agrees that the Contract Price shall be the Contractor's entire compensation for the performance of the Work.

SECTION 5.2 SCHEDULE OF VALUES. At least 20 days prior to submitting the first Application for Payment, the Contractor must submit a Schedule of Values to Rockland Green's approval, apportioning the entire Contract Price among the different elements of the Work (the "Schedule of Values"). The Contractor shall present the Schedule of Values in the format that Rockland Green requires and include the level of detail and backup required by Rockland Green, as referenced in the Specifications. The Contractor shall not imbalance the Schedule of Values nor artificially inflate any element thereof. Upon request of Rockland Green, the Contractor shall furnish additional data to support values given that will substantiate their correctness. The Schedule of Values that is approved by Rockland Green will be used as basis for reviewing

DRAFT

Contractor's Applications for Payment. The violation of this provision by the Contractor shall constitute a material breach of this Contract. The Schedule of Values will be utilized for the Contractor's Applications for Payment but shall only be so utilized after it has been approved in writing by Rockland Green.

SECTION 5.3 APPLICATIONS FOR PAYMENT AND RETAINAGE.

A. Application for Payments. After the Schedule of Values is approved, the Contractor may submit monthly Applications for Payment to Rockland Green in accordance with the Schedule of Values. Each Application for Payment shall be on the form required by the Specifications, and accompanied by a certificate from an authorized representative of the Contractor certifying: (1) the portion of the Contract Price which is payable to the Contractor, (2) that the Contractor is neither in default under this Contract nor in breach of any material provision of this Contract such that the breach would, with the giving of notice or passage of time, constitute an Event of Default, and (3) that all items applicable to the Schedule of Values entitling the Contractor to request payment have been completed in accordance with this Contract.

Each Application for Payment shall include the following supporting documentation to substantiate such Application for Payment (in the form and level of detail determined acceptable by Rockland Green), as applicable to the Work performed for which the Contractor is submitting such Application for Payment:

(1) a reasonably detailed description of all Work actually completed to date;

(2) a revised Project Schedule/Progress Schedule which shall reflect changes since the date of the last Application for Payment;

(3) notice of any Liens or Encumbrances which have been filed, together with evidence that the Contractor has bonded or discharged such Liens or Encumbrances;

(4) written acknowledgement from Subcontractors that an agreement has been signed and accepted for the work to be performed by such Subcontractor;

(5) submittal logs;

(6) written reports;

(7) a letter of transmittal corresponding to the submittals associated with such payment;

(8) a verified statement setting forth the information required under any Applicable Law pertaining to prevailing wages;

(9) certified payroll reports to the extent required pursuant to the Prevailing Wage Law;

(10) such additional specific information required for the applicable payment as required by the Specifications or as reasonably required by Rockland Green; and

(11) any other documents or information relating to the Work or this Contract reasonably requested by Rockland Green or as may be required by Applicable Law, this Contract, or generally accepted accounting principles in connection with the financing of the Project.

DRAFT

B. Change Orders and Applications for Payments. Amounts reflected in Change Orders may be included in Application for Payments to the extent they are not in dispute and subject to final approval of cost to Rockland Green for such changes in the Work.

C. Certification by Contractor. Each Application for Payment shall be signed by the Contractor and shall constitute the Contractor's representation that the quantity of Work has reached the level for which payment is requested, that the Work has been properly performed in strict compliance with the Contract Documents, that the Contractor knows of no reason why payment should not be made as requested, and the Contractor will promptly pay its Subcontractors, suppliers, vendors and any other party for their portion of the Work covered by the Application for Payment.

D. Retainage. For each payment made prior to Final Completion of the Work, Rockland Green may withhold 10% of the payment, as retainage, from the payment otherwise due. Upon Final Completion of the Work, the Contractor may submit an Application for Payment that includes the retainage withheld from prior Applications for Payment pursuant to this Section.

E. Rockland Green Review and Payment. Upon receipt of a properly completed Application for Payment, Rockland Green shall review the Application for Payment and may also review the Work at the Site or elsewhere to determine whether the quantity and quality of the Work is as represented in the Application for Payment and is as required by this Contract. Such review of the Application for Payment and any related work shall be performed by Rockland Green within fourteen (14) days from the date Rockland Green receives such Application for Payment. The amount of each such payment shall be the amount approved for payment by Rockland Green, less a ten percent (10%) retainage, and such amounts, if any, otherwise owing by the Contractor to Rockland Green or which Rockland Green has the right to withhold as authorized by the Contract Documents. Rockland Green shall make payment of the approved Application for Payment within thirty (30) days from the date of such approved Application for Payment. Approval of the Contractor's Application for Payment shall not preclude Rockland Green from the exercise of any of its rights, including those related to authorized withholdings, offsets and reclamation.

F. Application for Payment as Representation and Warranty of Work. The submission by the Contractor of an Application for Payment also constitutes an affirmative representation and warranty that all work for which Rockland Green has previously paid is free and clear of any lien, claim, or other encumbrance of any person whatsoever. As a condition precedent to payment, the Contractor shall, when required by Rockland Green, also furnish to Rockland Green properly executed waivers of lien or claim, in a form acceptable to Rockland Green, from all Subcontractors, materialmen, suppliers or others having lien or claim rights, wherein said subcontractors, materialmen, suppliers or others having lien or claim rights, shall acknowledge receipt of all sums due pursuant to all prior Applications for Payment and waive and relinquish any liens, lien rights or other claims relating to the Work and the Project Site. Furthermore, the Contractor warrants and represents that, upon payment of the Application for Payment submitted, title to all Work included in such payment shall be vested in Rockland Green, even though responsibility for the care and maintenance of said Work rests with Contractor until Final Completion of the Work has been achieved.

SECTION 5.4 COSTS AND COST SUBSTANTIATION.

A. Costs. The Contract Price has been negotiated by the Parties and fixed by the terms of this Contract. Any other cost shall only be permitted in the event of a Change Order or Construction Change Directive. Any such cost proposed or incurred by the Contractor, which is directly or indirectly chargeable to Rockland Green in whole or in part hereunder, shall be (i) calculated in accordance with Section 8.8 or, if such cost is not calculable in accordance with the provisions of Section 8.8, then (ii) the fair market price for the good or service provided, or, if there is no market, shall be a just and reasonable price agreed upon by the Parties.

B. Cost Substantiation. To substantiate any costs, other than the Contract Price, the Contractor shall supply Rockland Green with a certificate signed by a senior management officer of the Contractor, which (1) shall state the amount of such cost and the provisions of this Contract under which such cost is properly chargeable to Rockland Green, and (2) if not calculable pursuant to Section 8.8 hereof, than Contractor, shall describe the competitive or other process utilized by the Contractor to obtain a fair market price, and shall state that such cost is a fair market price for the service or materials to be supplied (or, if there is no market, that such cost is commercially reasonable) and that such services and materials are reasonably required pursuant to this Contract. The certificate shall be accompanied by copies of such documentation as shall be reasonably required by Rockland Green which shall include reasonably detailed information necessary to substantiate any cost described in this subsection. Upon Rockland Green's request, to confirm direct costs required to be cost substantiated, Contractor shall provide copies of timesheets, invoices, canceled checks, expense reports, receipts and any other documents requested by Rockland Green.

SECTION 5.5 CONTRACTOR PROJECT SCHEDULE AS A CONDITION OF PAYMENT. The Contractor's Project Schedule shall be updated as required by Rockland Green and shall be updated to reflect conditions encountered from time to time. Each such revision shall be furnished to Rockland Green with each Application for Payment. Strict compliance with the requirements of this Section shall be a condition precedent to payment to the Contractor and failure by the Contractor to strictly comply with said requirements shall constitute a material breach of this Contract. No update to the Project Schedule can alter the Contract Time without the express, written approval of Rockland Green.

SECTION 5.6 PROMPT PAYMENT TO SUBCONTRACTORS. When payment is received from Rockland Green, the Contractor shall promptly pay all Subcontractors, materialmen, laborers and suppliers the amounts they are due for the work covered by such payment.

SECTION 5.7 NO APPROVALS, CONSENTS OR WAIVERS IMPLIED IN PAYMENTS. Neither payment to the Contractor, utilization of the Site for any purpose by Rockland Green, nor any other act or omission by Rockland Green shall be interpreted or construed as an acceptance of any Work of the Contractor not strictly in compliance with the Contract Documents or deemed to be a waiver of Rockland Green's right and remedies provided for in this Contract.

SECTION 5.8 PAYMENT WITHHOLDING. After written notice to the Contractor and a reasonable opportunity to cure, Rockland Green shall have the right to refuse to make payment, in whole or in part, and, if necessary, may demand the return of a portion or the entire amount previously paid to the Contractor due to:

(i) The quality of a portion, or all, of the Contractor's Work not being in compliance with the requirements of the Contract Documents;

(ii) The quantity of the Contractor's work not being as represented in the Contractor's Application for Payment, or otherwise;

(iii) The Contractor's rate of progress being such that, in the reasonable opinion of Rockland Green, Final Completion may be inexcusably delayed;

(iv) The Contractor's failure to use Contract funds, previously paid the Contractor by Rockland Green to pay Contractor's project-related obligations including, but not limited to, Subcontractors, laborers and material and equipment suppliers;

(v) Claims made, or claims likely to be made as evidenced by a claimant filing a demand, notice of intent to file a claim, including a duly filed mechanic's lien for labor or materials provided or a notice of intent to file a mechanic's lien, against Rockland Green or its property for which the Contractor or its agents or Subcontractors or others for whom it is responsible are, or reasonably appear to be at fault;

(vi) Loss caused by the Contractor; or

(vii) The Contractor's failure or refusal to perform any of its obligations to Rockland Green after written notice and a reasonable opportunity to cure as set forth above.

In the event that Rockland Green makes written demand upon the Contractor for amounts previously paid by Rockland Green as contemplated in this Section, the Contractor shall promptly comply with such demand. Rockland Green's rights hereunder survive the term of this Contract, are not waived by final payment and/or approval of the Certificate of Final Completion, and are in addition to Contractor's obligations elsewhere in this Contract.

SECTION 5.9 PAYMENT UPON FINAL COMPLETION. Upon Final Completion, Rockland Green shall pay the Contractor, in accordance with Section 5.10 below, an amount sufficient to increase total payments to the Contractor to one hundred percent (100%) of the Contract Price, less any amounts attributable to damages, and less one hundred fifty percent (150%) of the costs, as reasonably determined by Rockland Green for completing all incomplete work, correcting and bringing into conformance all defective and nonconforming work, and handling any outstanding or threatened claims. Such a calculation by Rockland Green of costs for completing all incomplete work, correcting and bringing into conformance all defective and nonconforming work, and handling any outstanding or threatened claims shall not bar Rockland Green from exercise of its rights elsewhere herein, or otherwise as provided by law for any incomplete, defective or nonconforming work or claims which are discovered by Rockland Green after the date of making such calculation or after the date of any partial or final payment, whether or not such incomplete, defective or nonconforming work or claims were obvious or should have been discovered earlier. Final payment shall be made only upon completion of the final inspection and approval of a Certificate of Final Completion in accordance with Section 4.2 and the delivery and approval of information, as required herein.

SECTION 5.10 FINAL PAYMENT. Rockland Green shall endeavor to make final payment of all sums due the Contractor within thirty (30) days of the final Application for Payment, after deduction of all previous payments and all percentages and amounts to be kept and retained under provisions of this Contract, and with the exception of items disputed in good faith or concerning which Rockland Green has reasonably exercised any of its rights to investigate. The acceptance by the Contractor of the final payment shall operate as and shall be a release to Rockland Green and every employee, officer and agent thereof, from any and all Claims and all liability to the Contractor for anything done or furnished in connection with the Work and for any act or neglect of Rockland Green or of any others relating to or affecting the Work. Acceptance of final payment by the Contractor, a Subcontractor or material supplier shall constitute a waiver of claims by that payee. No payment, however, final or otherwise, shall operate to release the Contractor or his sureties from any obligations under this Contract or the Performance Bond.

ARTICLE VI.
CONTRACT ADMINISTRATION

SECTION 6.1 CONTRACT ADMINISTRATION. Rockland Green will provide administration of the Contract as described in the Contract Documents.

SECTION 6.2 SITE VISITS. Rockland Green will visit the Site at intervals appropriate to the stage of the Contractor's Work (1) to become generally familiar with and to keep informed about the progress and quality of the portion of the Work completed, (2) to guard against defects and deficiencies in the Work, and (3) to determine in general if the Work is being performed in a manner indicating that the Work, when fully completed, will be in accordance with the Contract Documents. However, Rockland Green will not be required to make exhaustive or continuous on-site inspections to check the quality or quantity of the Work. Rockland Green will neither have control over or charge of, nor be responsible for, the means, methods, techniques, sequences or procedures, or for the safety precautions and programs in connection with the Work, since these are solely the Contractor's rights and responsibilities under the Contract Documents, except as otherwise provided.

SECTION 6.3 FAILURE TO PERFORM. Rockland Green will not be responsible for the Contractor's failure to perform the Work in accordance with the requirements of the Contract Documents. Rockland Green will not have control over or charge of and will not be responsible for acts or omissions of the Contractor, Subcontractor, or their agents or employees or any other persons or entities performing portions of the Work.

SECTION 6.4 COMMUNICATIONS FACILITATING CONTRACT ADMINISTRATION. The Contractor shall communicate with Rockland Green about matters arising out of or relating to this Contract, as well as the Project. Rockland Green's communications by and with Subcontractors and material suppliers shall be through the Contractor. The Contractor is responsible for updating the Project Schedule, and shall report immediately in writing to Rockland Green any and all conflicts or disputes that it encounters or becomes aware of during the Project that have the potential to delay any aspect of the Project. The Contractor shall provide the report on any such conflict or dispute in writing immediately to Rockland Green. The failure to report such a conflict or dispute in writing to Rockland Green as set forth herein shall constitute a

waiver by the Contractor of any potential relief provided for hereunder in connection with such conflict or dispute.

SECTION 6.5 MEETINGS. The Contractor shall conduct meetings in accordance with the Specifications or as reasonably requested by Rockland Green.

SECTION 6.6 REVIEW OF SUBMITTALS. Rockland Green will take appropriate action upon the Contractor's Submittals, but only for the limited purpose of checking for conformance with information given and the Work expressed in the Contract Documents. Rockland Green's review will be in accordance with the Specifications, while allowing sufficient time in Rockland Green's judgment to permit adequate review. Review of such documents is not conducted for the purpose of determining the accuracy and completeness of other details such as dimensions or quantities or for substantiating instructions for equipment or systems, all of which remain the responsibility of the Contractor as required by the Contract Documents. Rockland Green's review shall not constitute approval of safety precautions or of any means, methods, techniques, sequences, or procedures.

SECTION 6.7 REJECTION OF WORK. Rockland Green will have authority to reject Work that does not conform to the Contract Documents. Whenever Rockland Green considers it necessary or advisable, Rockland Green will have authority to require inspection or testing of the Work. However, neither this authority of Rockland Green nor a decision made in good faith either to exercise or not to exercise such authority shall give rise to a duty or responsibility of Rockland Green to the Contractor, Subcontractors, material and equipment suppliers, their agents or employees, or other persons or entities performing portions of the Work.

SECTION 6.8 PREPARATION OF CHANGE ORDERS AND CONSTRUCTION CHANGE DIRECTIVES. Rockland Green will prepare Change Orders and Construction Change Directives, and may authorize minor changes in the Work in accordance with Article VIII hereof.

SECTION 6.9 INSPECTIONS. Rockland Green will conduct inspections to determine the date of Substantial Completion and the date of Final Completion. The Contractor shall assemble and forward to Rockland Green, for Rockland Green's review and records, written warranties and related documents required by the Contract Documents. Observation or inspection of the Work by Rockland Green shall not relieve the Contractor of its responsibility to complete the Work in accordance with the Contract Documents. Work performed without direct observation by Rockland Green shall not relieve the Contractor of full responsibility for completing the Work in accordance with the Contract Documents.

ARTICLE VII.
TERM

SECTION 7.1 EFFECTIVE DATE AND TERM. This Contract shall become effective on the Contract Date and shall continue in effect until all Contract Services have been completed, or this Contract is earlier terminated, as applicable (the "Term"). All rights, obligations and liabilities of the Parties hereto shall commence on the Contract Date, subject to the terms and conditions hereto.

ARTICLE VIII.
CHANGES TO THE WORK

SECTION 8.1 CHANGES TO THE WORK. Changes in the Work may be accomplished after execution of this Contract, and without invalidating this Contract, by Change Order, Construction Change Directive or order for a minor change in the Work. A Change Order shall be based upon agreement between Rockland Green and the Contractor. A Construction Change Directive may or may not be agreed to by the Contractor. An order for a minor change in the Work may be issued by Rockland Green. The Contractor shall proceed with any such Change Orders, Construction Change Directives and minor changes without delay and in a diligent manner, and same shall be accomplished in strict accordance with the following terms and conditions.

SECTION 8.2 CHANGE ORDERS.

A. A Change Order is a written instrument prepared by Rockland Green and signed by Rockland Green and Contractor stating their agreement upon all of the following: (1) a change in the Work; (2) the amount of adjustment, if any, in the Contract Price; and (3) the extent of the adjustment, if any in the Contract Time.

B. The cost of any change in the Work shall be determined in accordance with Section 5.4 hereof, the requirements of this Article and consistent with the Contract Documents.

C. In accordance with the Specifications, Rockland Green may issue a proposal request that includes a detailed description of a proposed change in the Work with supplemental or revised Drawings and Specifications. The Contractor shall prepare and submit an estimate of any change to Contract Price or Contract Time within 7 days after receipt of a proposal request. The Contractor shall include quantities and unit costs, with total cost or credit to Rockland Green. If requested by Rockland Green, the Contactor shall also furnish documentation of quantities, Taxes, delivery charges, equipment rentals, and trade discounts as applicable. If a change in Contract Time is involved, the Contractor shall provide an updated Progress Schedule. Contractor shall not stop work or initiate changes in response to a proposal request. If approved, Rockland Green will prepare and issue a Change Order.

SECTION 8.3 CONSTRUCTION CHANGE DIRECTIVES.

A. A Construction Change Directive is a written order prepared by Rockland Green and signed by Rockland Green, directing a change in the Work prior to agreement on adjustment, if any, in the Contract Price or Contract Time, or both. A Construction Change Directive shall be used in the absence of total agreement on the terms of a Change Order.

B. Upon receipt of a Construction Change Directive, the Contractor shall promptly proceed with the changes in the Work involved, regardless of whether the Contractor agrees with the proposed adjustment in Contract Price or Contract Time, if any. Contractor shall also promptly advise Rockland Green in writing of the Contractor's agreement or disagreement with the method, if any, provided in the Construction Change Directive for determining the proposed adjustment in the Contract Price or Contract Time.

DRAFT

C. If the Construction Change Directive provides for an adjustment to the Contract Price, the adjustment shall be based on one of the following methods:

1. If the Contractor does not respond promptly or disagrees with the method for adjustment in the Contract Price, Rockland Green shall determine the method and the adjustment on the basis of reasonable expenditures and savings of those performing the Work attributable to the change, including, in case of an increase in the Contract Price, a reasonable amount for overhead and profit.

2. Mutual acceptance of a lump sum properly itemized and supported by sufficient substantiating data to permit evaluation;

3. Unit prices stated in the Contract Documents or subsequently agreed upon in writing; or

4. Cost to be determined in a manner agreed upon by the parties and a mutually acceptable fixed or percentage fee.

D. The Contractor shall keep and present, in such form as Rockland Green may require, an itemized accounting together with appropriate supporting data. Costs for purposes of this Section shall be limited to those costs set forth in Section 8.8 below.

E. A Construction Change Directive signed by the Contractor indicates the Contractor's agreement therewith. Such agreement shall be effective immediately and shall be recorded as a Change Order.

F. The amount of credit to be allowed by the Contractor to Rockland Green for a deletion or change that results in a net decrease in the Contract Price shall be actual net cost as determined by Rockland Green.

G. Pending final determination of the total cost of a Construction Change Directive, the Contractor may request payment for Work completed under the Construction Change Directive in Applications for Payment. Rockland Green will make an interim determination for purposes of monthly certification for payment for those costs and certify for payment the amount that Rockland Green determines, in Rockland Green's judgment, to be reasonably justified. Rockland Green's interim determination of cost shall adjust the Contract Price on the same basis as a Change Order, subject to the right of either Party to disagree and assert a Claim in accordance with this Contract.

I. If Rockland Green and the Contractor agree concerning adjustments in the Contract Price and Contract Time, or otherwise reach agreement upon the adjustment, such agreement shall be effective immediately and Rockland Green will prepare a Change Order. Change Orders may be issued for all or any part of a Construction Change Directive.

SECTION 8.4 MINOR CHANGES IN THE WORK. Rockland Green has authority to order minor changes in the Work not involving adjustment in the Contract Price or extension or reduction of the Contract Time and not inconsistent with the intent of the Contract Documents.

DRAFT

Such changes will be affected by written order signed by Rockland Green and shall be binding on Rockland Green and the Contractor.

SECTION 8.5 CONTRACTOR'S PROPOSAL FOR CHANGE ORDERS.

A. The Contractor was provided the opportunity to propose Proposed Alterations in its Proposal in response to the RFP, and the Specifications include a process for substitutions, therefore the Contractor acknowledges that there should not be any reason why the Contractor may need to request a Change Order. However, if for any reason, the Contractor believes a Change Order is necessary, the Contractor shall furnish a written proposal for a Change Order that includes a description of the change and the reason and justification therefor, an itemized price breakdown and proposed change to the Contract Price, and the proposed change in Contract Time. The price breakdown must be in accordance with this Article, and include sufficient detail to permit an analysis of all costs for material, labor, equipment, and Subcontracts, and must cover all Work involved in the modification, whether the Work was deleted, added or changed. The Contractor shall include quantities and unit costs, with total cost or credit to Rockland Green. The Contactor shall also furnish documentation of quantities, Taxes, delivery charges, equipment rentals, and trade discounts as applicable. If a change in Contract Time is involved, the Contractor shall provide an updated Progress Schedule

SECTION 8.6 EXECUTION OF CHANGE ORDER AS WAIVER OF CLAIM. The execution of a Change Order by the Contractor shall constitute conclusive evidence of the Contractor's agreement to the ordered changes in the Work, this Contract as thus amended, the Contract Price and the time for performance by the Contractor. The Contractor, by executing the Change Order, waives and forever releases any claim against Rockland Green for additional time or compensation for matters relating to, arising out of or resulting from the Work included within or affected by the executed Change Order.

SECTION 8.7 NOTIFICATION TO SURETY AS OTHERWISE REQUIRED. The Contractor shall notify the Contractor's surety with reference to all Change Orders and Construction Change Directives if such notice, consent or approval are required by law. The Contractor's execution of the Change Order or Construction Change Directive shall constitute the Contractor's warranty to Rockland Green that, if required, the surety has been notified of, and consents to, such Change Order or Construction Change Directive and the surety shall be conclusively deemed to have been notified of such Change Order or Construction Change Directive and to have expressly consented thereto.

SECTION 8.8 ADDITIONAL COST FACTORS IN PRICING CHANGE ORDERS OR CONSTRUCTION CHANGE DIRECTIVES. For the purpose of Change Orders or Construction Change Directives, the following additional definitions and requirements apply:

A. Materials, Supplies and Equipment. The costs of Contractor's or Subcontractor's materials, supplies, and equipment includes the cost for rentals of machinery and equipment, exclusive of hand tools, the cost for transportation, and does not include sales tax from which Rockland Green is exempt. Indirect costs not specifically related to the Change Order or Construction Change Directive shall not be considered.

B. Direct Labor Cost. Contractor's or Subcontractor's direct labor cost shall be pursuant to the Project Labor Agreement, and limited to the hourly rate of directly involved

DRAFT

workers, employer contributions towards bona fide employee benefits, employee benefit funds, unemployment insurance, social security, and workers' compensation insurance.

C. Overhead. Contractor's or Subcontractor's overhead shall include bond premiums, license fees, supervision, and field office expense.

D. Overhead and Profit Fee. The fee for overhead and profit shall be limited to the following schedule:

(i) For the Contractor, for any work performed by the Contractor's own forces, 10% of the subtotal of direct labor costs and materials, supplies and equipment costs.

(ii) For the Contractor, for any work performed by his Subcontractor, 5% of the amount due the Subcontractor.

(iii) For each Subcontractor or sub-subcontractor involved, for any work performed by their own forces, 10% of their materials and direct labor costs.

(iv) For each Subcontractor, for work performed by his sub-subcontractor(s), 5% of the amount due the sub-subcontractor.

ARTICLE IX.
CLAIMS

SECTION 9.1 PROCEDURES FOR CONTRACT CLAIMS.

A. All Claims against Rockland Green shall be initiated by a written Claim submitted to Rockland Green.

B. The responsibility to substantiate Claims shall rest with the party making the Claim.

C. Notice of such Claim shall be received by Rockland Green no later than either ten (10) days after the event, or ten (10) days after the first appearance of the circumstances causing the Claim, whichever is sooner, and same shall set forth in detail all known facts and circumstances supporting the claim.

D. Final costs associated with any Claim upon which notice has been filed must be submitted in writing to Rockland Green within thirty (30) days after notice has been received.

E. Any Claim not filed with Rockland Green within such time and in compliance with the preceding provisions shall be deemed conclusively to have been waived and shall be dismissed.

F. Claims shall be referred to the Architect for an initial determination. An initial decision is a condition precedent to mediation of any Claim arising prior to the date final payment is due. The Architect will review Claims and within 10 days of the receipt of a Claim take one or more of the following actions: (1) request additional supporting data; (2) reject the Claim in whole or in part; (3) approve the Claim; or (4) suggest a compromise. If the Architect requests additional supporting data, such data shall be provided within 10 days after receipt of such request.

DRAFT

The Architect will render an initial decision approving or rejecting the Claim or suggesting a compromise. This initial decision shall (1) be in writing; (2) state the reasons therefore; and (3) notify the Parties of any change in the Contract Price or Contract Time or both. The initial decision shall be final and binding on the Parties, but subject to mediation if the Parties agree to mediate, and if the Parties fail to resolve the dispute through mediation, to binding dispute resolution, in accordance with Article XI.

SECTION 9.2 CONTRACTOR PROHIBITED FROM WITHHOLDING SERVICES. The Contractor shall proceed diligently with performance of the Contract Services and Rockland Green will continue to make payments in accordance with the Contract Documents, regardless of the existence any disputes regarding change in the Work or of any Claims submitted by the Contractor.

SECTION 9.3 CLAIMS RELATED TO SITE CONDITIONS. In the event the Contractor discovers previously concealed, hidden, and/or subsurface Site conditions which materially vary from those typically and ordinarily encountered in the general geographical location of the Project Site and the Contract Documents, the Contract Price may, with the approval of Rockland Green, be modified, either upward or downward, upon the written notice of Claim made by either Party. Final costs must be submitted within thirty (30) days after such notice is received by Rockland Green, unless extended by written agreement of the Parties. As a condition precedent to Rockland Green having any liability to the Contractor due to concealed and unknown conditions, the Contractor must give Rockland Green written notice of, and an opportunity to observe, such condition prior to disturbing the condition. The failure by the Contractor to give the written notice and make the Claim as provided by this section shall constitute a waiver by the Contractor of any rights arising out of or relating to such concealed and unknown condition.

SECTION 9.4 CONDITION PRECEDENT TO LIABILITY. In the event the Contractor seeks to make a Claim for an increase in the Contract Price, as a condition precedent to any liability of Rockland Green therefor, unless emergency conditions exist, the Contractor shall strictly comply with the requirements of Section 9.1 and such Claim shall be made by the Contractor before proceeding to execute any Work for which a Claim is made. Failure to comply with this condition precedent shall constitute a waiver by the Contractor of any Claim for additional compensation.

SECTION 9.5 LIMITATION OF ROCKLAND GREEN'S OBLIGATIONS FOR CLAIMS. In a Claim by the Contractor against Rockland Green for compensation in excess of the Contract Price, any liability of Rockland Green to the Contractor shall be strictly limited and computed in accordance with the Contract Documents and shall in no event include consequential damages of the Contractor or any estimated costs or damages.

ARTICLE X.
EVENTS OF DEFAULT AND TERMINATION

SECTION 10.1 ROCKLAND GREEN'S RIGHT TO TERMINATE FOR CAUSE. Rockland Green may terminate the Contract for cause for any of the reasons set forth in this Article, or for any other material breach of this Contract, whether or not the act, omission, or conduct resulting in the Contractor's material breach is enumerated in this Article. When Rockland Green

terminates this Contract for any cause due to the fault of or breach by the Contractor, the Contractor shall not be entitled to receive further payment until the Work is finished. If Rockland Green's costs to complete the work in accordance with the Contract Standards and other damages incurred by Rockland Green as a result of the Contractor's fault and or breach exceed the unpaid balance of the Contract Price, the Contractor shall pay the difference to Rockland Green. This obligation for payment shall survive termination of this Contract.

SECTION 10.2 GROUNDS FOR TERMINATION. Rockland Green may terminate this Contract for cause if the Contractor:

A. Refuses or fails to supply enough properly skilled workers or proper materials;

B. Fails to make payment to Subcontractors or suppliers for materials or labor in accordance with the respective agreements between the Contractor and the Subcontractors or suppliers;

C. Fails to comply with Applicable Law;

D. Fails to perform the Work in accordance with the Contract Documents or otherwise breaches any provision of the Contract Documents;

E. Is insolvent as determined under the United States Bankruptcy Code;

F. Pursuant to the issuance of an order of a court of competent jurisdiction, a receiver, liquidator, custodian or trustee of the Contractor is appointed or of a major part of the Contractor's property, respectively, or the filing against the Contractor of a petition to reorganize the Contractor pursuant to the United States Bankruptcy Code, which order shall not have been discharged or which filing shall not have been dismissed within ninety (90) days after such issuance or filing, respectively;

G. Fails to provide adequate assurances after notice of an anticipatory breach or repudiation of this Contract;

H. Fails to make satisfactory progress in the prosecution of this Contract;

I. Endangers the performance of this Contract;

J. Fails, after notice, to implement Construction Change Directive or Change Order;

K. Ceases performance of the Work in violation of the Contract Standards;

L. Fails to obtain and maintain the Performance Bond, Payment Bond, or Required Insurance as required herein;

M. Intentionally misrepresents information and facts relating to the Contractor's performance of its obligations hereunder;

DRAFT

N. Assigns this Contract or any funds due hereunder without prior written approval by Rockland Green;

O. Experiences a change in ownership in violation of Section 14.6;

P. Makes a false representation or warranty in any material respect when made, and the legality of this Contract or the ability of the Contractor to carry out its obligations hereunder is adversely affected;

Q. Fails to supply complete and accurate information, records or accounts as provided herein; or

R. Fails to achieve Substantial Completion by the Scheduled Substantial Completion Date or fails to achieve Final Completion by the date agreed to therefor, except for excuse by Uncontrollable Circumstances.

SECTION 10.3 NOTICE OF TERMINATION. If Rockland Green determines pursuant to Section 10.2 that it has cause to terminate this Contract, Rockland Green will provide the Contractor with a written notice of and opportunity to cure the default. If the default is not cured within seven (7) days of the Contractor's receipt of the notice, the termination for default is effective on the date specified in Rockland Green's written notice. If, however, Rockland Green determines that default contributes to the curtailment of an essential service or poses an immediate threat to life, health, or property, the Executive Director may terminate this Contract immediately upon issuing oral or written notice to the Contractor without any prior notice or opportunity to cure. In addition to any other remedies provided by law or this Contract, the Contractor must compensate Rockland Green for additional costs that foreseeably would be incurred by Rockland Green, whether the costs are actually incurred or not, to obtain substitute performance. Rockland Green's expense incurred in completion of the Work, including the cost of re-letting, shall be deducted and paid by the Contractor out of the monies due or to become due to the Contractor under this Contract. If the expense is more than the sum remaining unpaid, the Contractor and its sureties shall pay the amount of such deficiency to Rockland Green.

SECTION 10.4 TERMINATION BY ROCKLAND GREEN FOR CONVENIENCE.

Rockland Green may, at any time, terminate this Contract for Rockland Green's convenience and without cause. In case of such termination, the Contractor shall be entitled to receive payment for Work executed, and reasonable costs incurred by reason of such termination.

SECTION 10.5 ACTION BY CONTRACTOR AND ROCKLAND GREEN.

A. Action by Contractor upon Notice of Termination. Upon receipt of written notice from Rockland Green of termination pursuant to this Article, the Contractor shall:

(i) Cease operations as directed by Rockland Green in the notice and, if required by Rockland Green, participate in an inspection of the Work with Rockland Green to record the extent of completion thereof, to identify the Work remaining to be completed or corrected, and to determine what temporary facilities, tools, equipment and construction machinery are required and authorized to remain at the Site pending completion of the Work.

DRAFT

(ii) Following such initial inspection of the Work with Rockland Green described in Section 10.5 A(i), above, the Contractor shall:

(a) Complete or correct the items directed by Rockland Green, and take actions necessary, or that Rockland Green may direct, for the protection and preservation of any stored materials and equipment and completed Work;

(b) Unless otherwise directed by Rockland Green pursuant to Section 10.5 (B)(i) below, remove its tools, equipment and construction machinery from the Site, and

(c) Except as directed by Rockland Green in Section 10.5 (B)(ii) below, terminate all existing Subcontracts and purchase orders related to the Work and enter into no further Subcontracts or purchase orders therefor. To the extent that Rockland Green elects to take legal assignment of Subcontracts and purchase orders as set forth in 10.5(B)(ii), the Contractor shall execute and deliver all such papers and take all such steps, including the legal assignment of such Subcontracts and other contractual rights of the Contractor, as Rockland Green may require for the purpose of fully vesting in Rockland Green the rights and benefits of the Contractor under such Subcontracts or purchase orders. All Subcontracts and purchase orders entered into by the Contractor shall contain provisions allowing for assignment to Rockland Green as described herein.

B. Action by Rockland Green Following Notice. Following written notice from Rockland Green of termination, Rockland Green may:

(i) Take possession of the Site and of all materials and equipment thereon;

(ii) Accept assignment of Subcontracts and purchase orders that are elected by Rockland Green to be assigned to it;

(iii) Complete the Work by whatever reasonable method Rockland Green may deem expedient; and

(iv) Exercise any rights under the Contractor's Performance Bond, Payment Bond, and any other applicable security instrument of the Contractor.

C. Cost of Terminating Subcontracts. Rockland Green shall not compensate the Contractor for the cost of terminating Subcontracts if this Contract is terminated.

ARTICLE XI.
DISPUTE RESOLUTION AND LITIGATION

SECTION 11.1 MEDIATION. Claims or other matters in controversy arising out of or related to this Contract may be subject to non-binding mediation prior to binding dispute resolution, if the Parties agree in writing to mediate. Unless the Parties agree otherwise, mediation shall be administered by the American Arbitration Association in accordance with its Construction Industry Mediation Procedures in effect at the time of the mediation. A request by a Party for mediation shall be made in writing to the other Party. The Parties shall share the mediator's fee

DRAFT

and any filing fees equally. Agreements reached in mediation shall be enforceable as settlement agreement in any court having jurisdiction thereof.

SECTION 11.2 FORUM SELECTION AND CONSENT TO JURISDICTION, WAIVER OF RIGHT TO REMOVE. All Legal Proceedings related to this Contract or to the Project or to any rights or any relationship between the parties arising therefrom shall be solely and exclusively filed, tried and maintained in the New York State Supreme Court located in Rockland County, New York. The Contractor and Rockland Green each expressly and irrevocably waive any right otherwise provided by any Applicable Law to remove the matter to any other state or federal venue, consents to the jurisdiction of such courts in any such Legal Proceeding, waive any objection it may have to the laying of the jurisdiction of any such Legal Proceeding, and waive its right to a trial by jury. Each party shall bear its own costs of such litigation, except as otherwise provided herein or by law. Neither party shall be compelled to participate in any form of arbitration, whether commenced by the other party or by a third party such as a Subcontractor, supplier or consultant.

ARTICLE XII.
INSURANCE, SECURITY FOR PERFORMANCE, INDEMNIFICATION, AND UNCONTROLLABLE CIRCUMSTANCES

SECTION 12.1 REQUIRED INSURANCE. At all times during the Term, the Contractor shall obtain and maintain the Required Insurance in accordance with Appendix D hereto and shall pay all premiums and deductibles with respect thereto as the same become due and payable. The Contractor shall also require all of its Subcontractors working at the Site to secure and maintain the Required Insurance and other financial sureties required by Applicable Law in connection with their presence at the Site and the performance of their duties. The failure of the Contractor to obtain and maintain any Required Insurance shall not relieve the Contractor of its liability for any losses intended to be insured thereby. Should any failure to provide continuous insurance coverage occur, the Contractor shall indemnify and hold harmless Rockland Green in the manner provided in Section 12.3 hereof, from and against any Loss-and-Expense arising out of such failure.

SECTION 12.2 SECURITY FOR PERFORMANCE.

A. Performance and Payment Bonds. The Contractor shall provide financial security for the performance of its obligations and prompt payment of moneys that are due to all persons furnishing labor and materials hereunder through a Performance Bond and a Payment Bond each issued by a surety company: (1) approved by Rockland Green having a rating of "A" in the latest revision of the A.M. Best Company's Insurance Report; (2) listed in the United States Treasury Department's Circular 570, "Companies Holding Certificates of Authority as Acceptable Sureties on Federal Bonds and as Acceptable Reinsurance Companies"; and (3) properly registered and licensed to conduct business in the State of New York. The Performance Bond and the Payment Bond shall each be issued in the amount of the Contract Price. The Performance Bond and the Payment Bond shall be substantially in the applicable form prescribed by Rockland Green and will be attached hereto as Transaction Agreements 1 and 2, respectively, to this Contract. A copy of the Performance Bond and the Payment Bond shall be kept by Rockland Green and shall be open to public inspection. The penal sum of each bond required under this Section shall be in the full amount of the Contract Price.

SECTION 12.3 INDEMNIFICATION BY THE CONTRACTOR.

A. To the full extent permitted by law, the Contractor shall indemnify and hold harmless Rockland Green and its directors, employees, representatives, agents, contractors, (each, a "Rockland Green Indemnitee"), from and against (and pay the full amount of) any and all Loss-and-Expense incurred by a Rockland Green Indemnitee to third-parties arising from or in connection with (or alleged to arise from or in connection with): (1) any failure by the Contractor to perform its obligations under this Contract; (2) the negligent acts, errors or omissions or willful misconduct of the Contractor or any of its officers, directors, employees, agents, representatives or Subcontractors in connection this Contract; and (3) to the extent provided elsewhere in this Contract.

B. The Contractor's indemnity obligations hereunder shall not be limited by any coverage exclusions or other provisions in any insurance policy maintained by the Contractor which is intended to respond to such events.

C. A Rockland Green Indemnitee shall promptly notify the Contractor of the assertion of any claim against it for which it is entitled to be indemnified hereunder. These indemnification provisions are for the protection of Rockland Green and any Rockland Green Indemnitee only and shall not establish, of themselves, any liability to third parties. This indemnification obligation shall include, but is not limited to, all claims against Rockland Green by an employee or former employee of the Contractor or any Subcontractor, and the Contractor expressly waives all immunity and limitation on liability under any industrial insurance act, other workers' compensation act, disability benefit act, or other employee benefit act of any jurisdiction which would otherwise be applicable in the case of such a claim. The provisions of this Section shall survive termination of this Contract.

D. The Contractor shall also ensure that all of its Subcontracts include the Subcontractor Indemnification language that is included in Appendix D, Required Insurance hereto.

SECTION 12.4 UNCONTROLLABLE CIRCUMSTANCES. Except as otherwise provided herein, neither party shall be liable to the other for any failure or delay in the performance of any obligation under this Contract to the extent such failure or delay is resulting from the occurrence of an Uncontrollable Circumstance.

A. Notice and Mitigation. The party that asserts the occurrence of an Uncontrollable Circumstance shall notify the other party immediately by electronic mail upon first knowledge of the occurrence of the Uncontrollable Circumstance, followed within three (3) days by a complete written description of: (1) the Uncontrollable Circumstance and the cause thereto (to the extent known); and (2) the date the Uncontrollable Circumstance began, its estimated duration, the estimated time during which the performance of such party's obligations hereunder will be delayed, or otherwise affected. As soon as practicable after the occurrence of an Uncontrollable Circumstance, the affected party shall also provide the other party with a description of: (1) the amount, if any, by which the Project Schedule is proposed to be adjusted as a result of such Uncontrollable Circumstance; (2) its estimated impact on the other obligations of such party under this Contract and on the obligations of any Subcontractors; and (3) potential mitigating actions which might be taken by the Contractor or Rockland Green. The affected party shall also provide prompt written notice of the cessation of such Uncontrollable Circumstance.

Whenever such act, event or condition shall occur, the party claiming to be adversely affected thereby shall, as promptly as practicable, use all reasonable efforts to eliminate the cause therefor, reduce costs and resume performance under this Contract. While the Uncontrollable Circumstance continues, the affected party shall give notice to the other party, before the first day of each succeeding week, updating the information previously submitted. The party claiming to be adversely affected by an Uncontrollable Circumstance shall bear the burden of proof, and shall furnish promptly any additional documents or other information relating to the Uncontrollable Circumstance reasonably requested by the other party.

B. Conditions to Schedule Relief. In the event that the Contractor believes it is entitled to any schedule relief on account of any Uncontrollable Circumstance, it shall furnish Rockland Green written notice of the specific schedule relief requested and detailing the event giving rise to the claim within fifteen (15) days after the giving of notice of the first knowledge of the Uncontrollable Circumstance, or if the specific schedule relief cannot reasonably be ascertained and such event detailed, with such fifteen (15) day period, then within such longer period with which it is reasonably possible to detail the event and ascertain such relief. Within thirty (30) days after receipt of such a timely submission from the Contractor, Rockland Green shall issue a written determination as to the extent, if any, it concurs with the Contractor's claim for performance or schedule relief, and the reasons therefor. The Contractor acknowledges that its failure to give reasonable and timely notice pertaining to an Uncontrollable Circumstance as required under this Section may increase the cost of the Uncontrollable Circumstance to Rockland Green. To the extent the Contractor's failure to give reasonable and timely notice to Rockland Green causes Rockland Green to incur additional costs related to the Uncontrollable Circumstance, the Contractor shall be responsible for such additional cost. The Contractor shall have the affirmative burden of refuting Rockland Green's assertion. Absent such refutation, Rockland Green's additional costs shall immediately become due from the Contractor.

C. Acceptance of Relief Constitutes Release. The Contractor's acceptance of any performance or schedule relief under this Section shall be construed as a release of Rockland Green by the Contractor (and all persons claiming by, through, or under the Contractor) of any and all Loss-and-Expense resulting from, or otherwise attributable to, the event giving rise to the relief claimed.

ARTICLE XIII.
WARRANTY

SECTION 13.1 WARRANTY. The Contractor warrants to Rockland Green that the Work, and all materials, equipment, and structures furnished or fabricated, shall (i) be new, of recent manufacture and of high quality, (ii) conform to the requirements of this Contract, (iii) be free of defects in materials, equipment, and workmanship, and (iv) meet the Specifications during the Warranty Period (the "Warranty"). The Warranty Period is the period commencing on the date of Final Completion and continuing through one-year unless otherwise extended as provided herein.

A. Call-Back Obligations. If, at any time during the Warranty Period, any of the Work is found to be malfunctioning, defective or otherwise not in accordance with the requirements of this Contract, the Contractor or its Subcontractor shall correct it promptly after receipt of written notice from Rockland Green to do so. Rockland Green shall give such notice

DRAFT

promptly after discovery of the condition. The Contractor shall respond to service calls from Rockland Green within three (3) business days. Such response shall require that a competent representative or representatives of the Contractor, inspect the Site and, while on Site, either correct the problem or initiate a course of action that will fully correct the problem within a reasonable period of time in accordance with Good Engineering and Construction Practice and the specific requirements of this Article. The time period for correction shall not exceed ten (10) days; provided, however, that if such time periods are not practicable in accordance with Good Engineering and Construction Practice, then the time period for correction shall be the minimum amount of time required in accordance with Good Engineering and Construction Practice. Before any necessary correction, repair or replacement of facilities is initiated by the Contractor, a plan indicating the scope and schedule for such work shall be approved by Rockland Green. In the event of a latent, hidden, or not readily observable defect in the design, materials or workmanship or deviation from this Contract, the Warranty shall extend for an additional one (1) year from the date of discovery of such defect, deviation or condition.

B. Full-Scale Inspection. The one-year warranty on workmanship set forth in Section A above includes a full-scale inspection by the Contractor at the end of the Warranty Period, as well as any required work identified during the inspection, including labor and materials.

C. Right of Rockland Green to Proceed with Corrective Action; Contractor Liability. If the Contractor fails to commence and complete the steps set forth in subsections (A) or (B) of this Section within the required time frames, in addition to any other remedies provided under this Contract, the Security Instruments or Applicable Law, Rockland Green may commence and complete the full-scale inspection and the correction of any nonconforming Work with its own forces or with third party contractors.

D. Subcontractors. The Contractor shall obtain from all Subcontractors, vendors, suppliers and other persons from which the Contractor procures structures, improvements, fixtures, machinery, equipment and materials to be incorporated in the Work such warranties and guarantees as are normally provided with respect thereto and as are specifically required in the Specifications, each of which shall be assigned to Rockland Green to the full extent of the terms thereof.

E. Manufacturers' Warranties. Nothing in this warranty is intended to limit any manufacturer's warranty which provides Rockland Green with greater warranty rights than set forth in this Article or the Contract Documents. The Contactor will provide Rockland Green with all manufacturers' warranties upon Final Completion. All warranties and guarantees shall commence on the date of Final Completion. Any manufacturer's warranties extending longer than one year shall remain in effect for the full warranty period.

F. No Period of Limitation on Other Obligations. Nothing contained in this Article shall be construed to establish a period of limitation with respect to other obligations that the Contractor has under this Contract or under Applicable Law with respect to the Work. The Warranty is not intended to constitute a period of limitations for any other rights or remedies Rockland Green may have regarding Contractor's other obligations under the Contract Documents.

G. Extension of Warranty. The "call-back" obligations set forth in this Section shall apply to all Work re-done or corrected pursuant to this Contract. The "call-back" obligations

DRAFT

for re-done or corrected elements of the Work shall extend beyond the Warranty Period, if necessary, to provide a one (1) year period following acceptance by Rockland Green of such re-done or corrected Work.

H. Contractor Reliance on Manufacturers' Warranties During Call-Back Period. During the period in which the call-back obligations set forth in this Section are in effect, the Contractor (or Rockland Green) shall be permitted to enforce all warranties provided by manufacturers, suppliers and other third parties, if any. Notwithstanding the applicability or effectiveness of such warranties, the Contractor shall be required to comply with all the requirements set forth in this Section.

I. Compensation. The Contractor acknowledges that the Contract Price contains the entire compensation due the Contractor for any and all warranty work to be performed by the Contractor or its Subcontractors or agents pursuant to this Article including overhead and profit, except as otherwise provided. In the event any amounts are required to be paid to third-parties to perform warranty work pursuant to this Article, payment of such amounts shall be the responsibility of the Contractor.

J. Warranty not Exclusive. The warranty set forth in this Article is in addition to, and not in limitation of, any other warranties, rights and remedies available under this Contract or Applicable Law, and shall not limit the Contractor's liability or responsibility imposed by this Contract or Applicable Law with respect to the Work, including liability for design defects, latent construction defects, strict liability, negligence or fraud. The provisions of this Article shall survive the termination of this Contract.

K. No Limitation of Third Party Warranties. Nothing in this Contract is intended to limit any third party warranty that provides Rockland Green with greater warranty rights than those provided under this Article.

ARTICLE XIV.
MISCELLANEOUS PROVISIONS

SECTION 14.1 RELATIONSHIP OF THE PARTIES. The Contractor is an independent contractor of Rockland Green and the relationship between the Parties shall be limited to performance of this Contract in accordance with its terms. Neither Party shall have any responsibility with respect to the services to be provided or contractual benefits assumed by the other Party. Rockland Green has no responsibility for performing any of the Contract Services and has no responsibility for means, methods or approaches used in connection with performance of any of the Contract Services by the Contractor or others. Rockland Green has no responsibility for any construction safety plans or safety inspections, including the enforcement of safety precautions associated with the Contractor's Work. Nothing in this Contract shall be deemed to constitute either Party a partner, agent or legal representative of the other Party. No liability or benefits, such as workers' compensation, pension rights or liabilities, or other provisions or liabilities arising out of or related to a contract for hire or employer/employee relationship, shall arise or accrue to any Party's agent or employee as a result of this Contract or the performance thereto.

SECTION 14.2 CERTAIN OBLIGATIONS TO SURVIVE TERMINATION. Warranties, representations, indemnification obligations and other continuing obligations

DRAFT

explicitly stated herein, survive acceptance of the Work under this Contract and termination of this Contract; and do not relieve the Contractor of the Contractor's obligations hereunder.

SECTION 14.3 NO WAIVERS. No action of Rockland Green or Contractor pursuant to this Contract (including, but not limited to, any investigation or payment), and no failure to act, shall constitute a waiver by either party of the other party's compliance with any term or provision of this Contract. No course of dealing or delay by Rockland Green or Contractor in exercising any right, power or remedy under this Contract shall operate as a waiver thereto or otherwise prejudice such party's rights, powers and remedies. No single or partial exercise of (or failure to exercise) any right, power or remedy of Rockland Green or the Contractor under this Contract shall preclude any other or further exercise thereto or the exercise of any other right, power or remedy. The above notwithstanding, any of the terms, covenants, and conditions of this Contract may be waived at any time by the party entitled to the benefit of such term, covenant or condition if such waiver is in writing and executed by the party against whom such waiver is asserted.

SECTION 14.4 ACTIONS OF ROCKLAND GREEN IN ITS GOVERNMENTAL CAPACITY. Nothing in this Contract shall be interpreted as limiting the rights and obligations of Rockland Green in its governmental or regulatory capacity.

SECTION 14.5 ASSIGNMENT. The Contractor shall not assign, transfer, convey, sublet or otherwise dispose of this Contract, or of the Contractor's right, title, or interest herein, (including without limitation through a sale of assets or ownership interest, merger, consolidation or other change of control) to any third party, or assign all or any of the portion of compensation that may be due or become due under the terms hereof to any other person or corporation, without the previous consent in writing of Rockland Green. If the Contractor violates this Section, Rockland Green shall have the right, in its sole discretion, to terminate this Contract without prior notice and without a cure period, and in the event of such termination, the Contractor shall forfeit all monies earned hereunder. Rockland Green may, without the consent of the Contractor, make assignments, create such security interests in its rights hereunder and pledge such monies receivable hereunder as may be required in connection with the issuance of bonds.

SECTION 14.6 CHANGE IN OWNERSHIP OF CONTRACTOR OR A PARENT COMPANY. The Contractor shall provide Rockland Green with five (5) days' prior written notice of any change of any nature in the ownership (which includes the ownership structure) of the Contractor or any parent, subsidiary or Affiliate thereof, including without limitation any transfers of shares of stock, membership or other ownership units of the Contractor, parent subsidiary or Affiliate. In addition, if the Contractor is a privately held company, the Contractor shall provide Rockland Green with five (5) days' prior written notice of any changes in the officers, principals or directors of the Contractor. Subsequent to any such notices, the Contractor shall provide upon request of Rockland Green any reasonable information requested by Rockland Green related to such change in ownership (which includes the ownership structure), officers, principals or directors. At any time within five (5) days following Rockland Green's receipt of such supporting information, Rockland Green shall have the right to terminate this Contract upon thirty (30) days' notice to the Contractor. In the event of a violation of this Section by the Contractor, Rockland Green shall have the right in its sole discretion to terminate this Contract without prior notice or cure period, and in the event of such termination, the Contractor shall forfeit all monies earned hereunder.

SECTION 14.7 BINDING EFFECT. This Contract shall inure to the benefit of and shall be binding upon Rockland Green and the Contractor and any assignee acquiring an interest hereunder consistent with Section 14.5 hereof.

SECTION 14.8 AMENDMENT AND WAIVER. This Contract may not be amended except by a written agreement signed by the Parties. Any of the terms, covenants, and conditions of this Contract may be waived at any time by the Party entitled to the benefit of such term, covenant or condition if such waiver is in writing and executed by the Party against whom such waiver is asserted.

SECTION 14.9 NON-DISCRIMINATION. The Contractor, a Subcontractor or a supplier, shall not discriminate nor permit discrimination by any of their respective officers, employees, Subcontractors, agents and representatives against any person because of age, race, color, religion, gender, national origin, sexual orientation, or, with respect to otherwise qualified individuals, handicap. The Contractor will take all actions reasonably necessary to ensure that qualified applicants are employed, and that employees are treated during employment, without regard to their age, race, color, gender, religion, sexual orientation, national origin or, with respect to otherwise qualified individuals, handicap. Such action shall include, without limitation, recruitment and recruitment advertising; layoff or termination; upgrading, demotion, transfer, rates of pay or other form of compensation; and selection for training, including apprenticeship. The Contractor shall impose the non-discrimination provisions of this Section by contract on all Subcontractors hired to perform work related to the Contract Services and shall take all reasonable actions necessary to enforce such provisions. The Contractor will post in conspicuous places, available to employees and applicants for employment, notices setting forth the provisions of this nondiscrimination clause.

SECTION 14.10 NO THIRD PARTY RIGHTS CREATED. The Contract Documents are not to be construed to create a contractual relationship of any kind other than between Rockland Green and the Contractor. No third-party rights are intended, created, or provided, either expressly or by implication by the terms and conditions of this Contract. The terms and conditions of this Contract are expressly limited to benefit the parties hereto.

SECTION 14.11 NOTICES.

A. Procedure. Unless otherwise specifically provided for elsewhere in this Contract, all notices, requests, approvals and other communications required or permitted under this Contract shall be in writing and shall be deemed to have been duly given: (1) when delivered personally; (2) when sent by a nationally-recognized overnight courier service; (3) when mailed by certified or registered mail, return, receipt requested, postage prepaid; or (4) when sent by email, provided that a copy of the email is also sent by one of the methods listed above (except that email shall be sufficient if the recipient confirms receipt in writing, including by return email). Notice sent by email shall be deemed to have been given on the date sent if sent during normal business hours of the recipient, or on the next business day if sent after normal business hours. Notices shall be deemed given only when actually received. Either Party may, by like notice, designate further or different addresses to which subsequent notices shall be sent.

B. Contractor Notice Address. Notices required to be given to the Contractor shall be addressed as follows:

DRAFT

[ ]
[ ]
[ ]
[ ]

C. Rockland Green Notice Address. Notices required to be given to Rockland Green shall be addressed as follows:

Executive Director
Rockland Green
172 Main Street
Nanuet, New York 10954

With a copies to:

General Counsel
Rockland Green
172 Main Street
Nanuet, New York 10954

West Group Law PLLC
81 Main Street, Suite 510
White Plains, NY 10601
Attn: Stephanie Kosmos, Esq.

SECTION 14.12 NOTICE OF LITIGATION. In the event the Contractor or Rockland Green receives notice of or undertakes the defense or the prosecution of any Legal Proceedings, claims, or investigations in connection with the Project, the Party receiving such notice or undertaking such prosecution shall give the other Party timely notice of such proceedings and shall inform the other Party in advance of all hearings regarding such proceedings.

SECTION 14.13 COUNTERPARTS. This Contract may be executed in any number of original counterparts. All such counterparts shall constitute but one and the same agreement.

SECTION 14.14 FURTHER ASSURANCES. Rockland Green and Contractor each agree to execute and deliver such further instruments and to perform any acts that may be necessary or reasonably requested in order to give full effect to this Contract. Rockland Green and the Contractor, in order to carry out this Contract, each shall use all commercially reasonable efforts to provide such information, execute such further instruments and documents and take such actions as may be reasonably requested by the other and not inconsistent with the provisions of this Contract and not involving the assumption of obligations or liabilities different from or in excess of or in addition to those expressly provided for this Contract. By way of example and not limitation, upon reasonable request of Rockland Green, the Contractor shall supply an affidavit that the Work and/or Site is free of all liens and encumbrances, including liens for any taxes which are due and required to be paid by the Contractor (other than liens required or contemplated by this Contract).

DRAFT

[*signature page follows*]

DRAFT

IN WITNESS WHERETO, the Parties have caused this Contract to be executed by their duly authorized representatives as of the day and year first above written.

ROCKLAND GREEN

By: _____
Gerard M. Damiani, Jr.
Executive Director

[ ]

By: _____
Name:
Title:

DRAFT

APPENDICES TO THE CONTRACT FOR RENOVATION OF ROCKLAND GREEN ADMINISTRATIVE HEADQUARTERS AND CONSTRUCTION OF AN IMMERSIVE THEATRE EXPERIENCE LOCATED AT 72 MAIN STREET IN NANUET, NEW YORK

APPENDIX A	CONTRACT DRAWINGS
APPENDIX B	SPECIFICATIONS
APPENDIX C	CONTRACT PRICE
APPENDIX D	REQUIRED INSURANCE
APPENDIX E	PREVAILING WAGE SCHEDULE
APPENDIX F	PROJECT SCHEDULE

DRAFT

APPENDIX A
CONTRACT DRAWINGS

[*To be included*]

DRAFT

APPENDIX B
SPECIFICATIONS

[*To be included*]

DRAFT

APPENDIX C
CONTRACT PRICE

[*To be developed*]

DRAFT

APPENDIX D
REQUIRED INSURANCE

Prior to the Notice to Proceed and throughout the term of the Contract, the Contractor shall maintain insurance issued by an insurance carrier satisfactory to Rockland Green to protect the parties hereto from and against any and all claims, demands, actions, judgments, costs, expenses and liabilities of every kind and nature which may arise or result, directly or indirectly, from or by reason of such loss, injury, including injury to the applicable Contractor's employees or employees of such Contractor's Subcontractors, or damage. Such insurance shall be maintained at the Contractor's sole expense.

The Contractor shall obtain and maintain throughout the term of the Contract the following types and minimum amounts, not including deductible, of insurance:

- Commercial general liability and property damage insurance with broad form blanket contractual liability and products and completed operations coverage, shall be not less than $1,000,000 per occurrence and $2,000,000 general aggregate
    - Prohibited exclusion(s), including but not limited to (1) 'gravity related' injuries; (2) injuries sustained by an employee of an/any insured; (3) liability assumed by contract (4) height limitation or (5) territory restriction; and
    - Insurance must apply on a Per-Project basis; and
    - No Labor Law or Third-Party Action Over Exclusions;
- Commercial comprehensive automobile liability endorsed for any automobile (owned and non-owned) with minimum limits for combined property damage and bodily injury of $1,000,000 per occurrence
- Worker's compensation coverage in the statutory amounts required by New York State Law;
- Employer's liability insurance required by New York State law covering all of the employees of the Contractor at Rockland Green 's facility;
- Excess liability above the commercial general liability and automobile liability shall not be less than $10,000,000 per occurrence and $10,000,000 general aggregate, the Umbrella must be excess over the General Liability, Automobile Liability and Employers Liability and
- Pollution liability, if applicable, shall not be less than $5,000,000.
- Professional liability, if applicable, shall not be less than $5,000,000.

DRAFT

1. The commercial general liability, excess liability, professional liability, and pollution liability shall be kept in force for a period of one (1) year following the end of the contract period.

2. Additional Insureds. The Contractor will name Rockland Green, the County, and their officers, agents, employees, and consultants as additional named insureds on a primary, non-contributory basis (the "Additional Insureds") for Ongoing and Completed Operations on all insurance policies required herein, other than workers' compensation and employer liability coverage. Such coverage must be provided using the 04/13 versions of ISO Form CG 20 10 and CG 20 37 or equivalent. The Contractor will waive the subrogation rights of its various insurance carriers in favor of Rockland Green via CG 20 04 or equivalent.

3. Insurance Certificates and Policies. Insurance and any renewals thereof will be evidenced by certificates of insurance (the "Certificates") and copies of all insurance policies and endorsements issued or countersigned by a duly authorized representative of the issuer and delivered to Rockland Green for its approval thirty (30) days prior to the Contract commencement. The Certificates will require thirty (30) days written notice to Rockland Green, of cancellation, intent not to renew, or reduction in its coverage by the insurance company for all policies.

4. Non-Recourse Provision. All insurance policies will provide that the insurers will have no recourse against the Additional Insureds for payment of any premium or assessment and will contain a severability of interest provision in regard to mutual coverage liability policies. The coverages will be the primary source of any restitution or other recovery for any injuries to, or death of persons, or loss or damage to property incurred as a result of an action or inaction of the Contractor or its Subcontractors, of their respective suppliers, employees, agents, representatives, or invitees, that fall within these coverages and also within the coverages of any liability insurance or self-insurance program maintained by Rockland Green.

5. Deductibles. Deductibles shall not exceed $10,000.

6. Subcontractors. The Contractor will be responsible for ensuring that all Subcontractors which are working at the Site secure and maintain all insurance coverages hereunder and other financial sureties required by Applicable Law in connection with their presence and the performance of their duties at or concerning the Work. The Contractor will furnish Rockland Green with Subcontractors' Certificates and policies for review and approval prior to beginning.

DRAFT

7. Specific Provisions for Comprehensive General Liability Insurance. Comprehensive General Liability insurance, as required hereunder, will include premises-operations, blanket contractual, products and completed operations, personal injury, host liquor liability, explosion, collapse, underground hazards, and broad form property damage, including completed operations and independent contractor's coverages.

8. Specific Provisions for Worker's Compensation Coverage. Worker's Compensation insurance must be in accordance with the requirements of New York law, as amended from time to time. The required worker's compensation insurance will include other State's coverage, voluntary compensation coverage, and federal longshoreman and harbor worker's coverage.

9. Changes in Insurance Coverage. The insurance listed herein are the minimum coverages permitted, except that Rockland Green may decrease or omit the coverages specified at any time in its sole discretion. If Rockland Green decreases such coverage, any cost savings will be credited to the benefit of Rockland Green.

10. Qualifications of Insurers. The Contractor is required to obtain the insurance set forth in this Appendix with insurance companies that carry a Best's "A" or equivalent rating. In addition, insurance must be obtained and maintained with insurers authorized to do business in the State of New York.

11. Subcontractor Indemnification. The Contractor shall include the following language in all Subcontracts.

> To the fullest extent permitted by law, the Subcontractor agrees to indemnify, defend and hold harmless the Contractor as well as all parties listed below as additional insureds, their officers, directors, agents, employees and partners (hereafter collectively "Indemnitees") from any and all claims, suits, damages, liabilities, professional fees, including attorneys' fees, costs, court costs, expenses and disbursements related to death, personal injuries or property damage (including loss of use thereof brought against any of the Indemnitees by any person or entity, arising out of or in connection with or as a result or consequence of the performance of the Work of the Subcontractor, as well as any additional work, extra work or add-on work, whether or not caused in whole or in part by the Subcontractor or any person or entity employed, either directly or indirectly by the Subcontractor including any subcontractors thereof and their employees. The parties expressly agree that this indemnification agreement contemplates 1) full indemnity in the event of liability imposed against the Indemnitees without negligence; and 2) partial indemnity in the event of any actual negligence on the part of the Indemnitees either causing or contributing to the underlying claim which negligence is expressly excepted from the Subcontractor's obligation to indemnify. Attorneys' fees, court costs, expenses and disbursements shall be defined without limit to include those fees, costs, etc. incurred

DRAFT

in defending the underlying claim and those fees, costs, etc. incurred in connection with the enforcement of this Subcontract Agreement. Indemnification under this Agreement shall operate whether or not Contractor has placed and maintained the insurance required under this agreement. The Subcontractor shall cause all subcontract agreements it enters into to include this indemnification clause so as to ensure that Contractor and all Indemnitees hereunder shall have the same protection from sub-subcontractors as is afforded by the Subcontractor.

DRAFT

APPENDIX E
PREVAILING WAGE SCHEDULE

[*To be included*]

DRAFT

APPENDIX F
PROJECT SCHEDULE

[*To be developed*]

DRAFT

TRANSACTION AGREEMENTS

1. Performance Bond
2. Payment Bond
3. Project Labor Agreement

DRAFT

TRANSACTION AGREEMENT 1

[PERFORMANCE BOND FORM]

Bond No. _____

KNOW ALL MEN BY THESE PRESENT, that we, [CONTRACTOR] with a place of business at as principal (the "Principal"), and[ ], a [ ] qualified to do business in the State of New York, with a place of business at [ ] as Surety (the "Surety"), are held and firmly bound unto the Rockland County Solid Waste Management Authority a/k/a Rockland Green as Obligee (the "Obligee"), in the sum of [dollars ($)] lawful money of the United States of America, to be paid to the Obligee, for which payment, well and truly to be made, we bind ourselves, our respective heirs, executors, administrators, successors and assigns, jointly and severally, firmly by these present.

WHEREAS, the Principal has assumed and made a contract with the Obligee, bearing the date of [ ], and entitled the Contract for the Renovation Of Rockland Green Administrative Headquarters And Construction Of An Immersive Theatre Experience located at 172 Main Street, Nanuet, NY (the "Contract").

NOW THE CONDITIONS of this obligation are such that if the Principal and all Subcontractors or suppliers under said Contract shall well and truly keep and perform all the undertakings, covenants, agreement, terms, and conditions of said Contract on their part to be kept and performed during the original term of said Contract and any extensions thereof that may be granted by the Obligee, with or without notice to the Surety, and shall also well and truly keep and perform all the undertakings, covenants, agreements, terms and conditions of any and all duly authorized modifications, alterations, changes or additions to said Contract, (notice to the Surety of such modifications, alterations, changes or additions being hereby waived), the obligations of the Surety set forth herein shall become null and void only if such completion of the Contract is expressly acknowledged in writing by the Obligee; otherwise such obligations shall remain in full force and virtue.

WHENEVER the Principal shall be declared by the Obligee to be in default under the Contract, the Obligee having performed the Obligee's material obligations thereunder, at the Obligee's option as declared in writing, the Surety shall promptly remedy the default whatever it may be or shall promptly perform the Contract in accordance with all of its terms and conditions. To the extent that the Obligee elects to not have the Surety remedy the default nor promptly perform the Contract, the Surety shall make payment to the Obligee up to the Penal Sum of this instrument.

DRAFT

IN THE EVENT the Contract is abandoned by the Principal, or is terminated by the Obligee under the applicable provisions of the Contract, the Surety hereby further agrees that the Surety shall, if requested in writing by the Obligee promptly take all such actions as is necessary to complete said Contract in accordance with its terms and conditions. To the extent that the Obligee elects not to require the Surety to take all such actions as are necessary to complete said Contract, the Surety shall make payment to the Obligee up to the Penal Sum of this instrument.

IN WITNESS WHEREOF, the Principal and Surety have hereto set their hands and seals this _____ day of _____, 2024.

PRINCIPAL	SURETY
_____	_____
_____	_____
[Name and Seal]	[Name and Seal]
_____	_____
[Title]	[Title]
_____	_____
[Address]	[Address]
_____	_____
[Phone]	[Phone]
Attest:_____	Attest:_____

The rate of the Bond is _____% of the first $_____ and _____% for the next $_____. The total premium for this Bond is $_____.

DRAFT

TRANSACTION AGREEMENT 2

[PAYMENT BOND FORM]

Bond No. _____

KNOW ALL MEN BY THESE PRESENT, that we [CONTRACTOR] with a place of business at as principal (the "Principal"), and [ ], a [ ] qualified to do business in the State of New York, with a place of business at [ ] as Surety (the "Surety"), are held and firmly bound unto Rockland County Solid Waste Management Authority a/k/a Rockland Green as Obligee (the "Obligee"), in the sum of [Dollars ($)] lawful money of the United States of America, to be paid to the Obligee, for which payment, well and truly to be made, we bind ourselves, our respective heirs, executors, administrators, successors and assigns, jointly and severally, firmly by these present.

WHEREAS, the Principal has assumed and made a contract with the Obligee, bearing the date of [ ], and entitled the Contract for the Renovation Of Rockland Green Administrative Headquarters And Construction Of An Immersive Theatre Experience located at 172 Main Street, Nanuet, NY (the "Contract").

NOW, THE CONDITIONS of this obligation are such that if the Principal and all Subcontractors under said Contract shall promptly pay for all labor performed or furnished and for all materials used or employed in said Contract (including any amendments or modifications thereto, notice to the Surety of such amendments or modifications being hereby waived) and defends, indemnifies and holds harmless the Obligee from claims, demands, liens or suites by any person or entity seeking payment for labor, materials or equipment furnished for use in performance of the Contract, then this obligation shall become null and void; otherwise, it shall remain in full force and effect.

The Surety's obligation to the Obligee under this Bond shall arise after the Obligee provides notice to the Principal and Surety of claims, demands, liens or suits against the Obligee or the Obligee's property by any person or entity seeking payment for labor, materials or equipment furnished for use in the performance of the Contract.

The Surety shall promptly and at the Surety's expense defend, indemnify and hold harmless the Obligee against any duly tendered claim, demand, lien or suit against the Obligee or the Obligee's property.

IN WITNESS WHEREFORE, the Principal and Surety have hereto set their hands and seals this _____ day of _____, 2024.

PRINCIPAL SURETY

DRAFT

_____	_____
_____	_____
[Name and Seal]	[Name and Seal]
_____	_____
[Title]	[Title]
_____	_____
[Address]	[Address]
_____	_____
[Phone]	[Phone]……
Attest:_____	Attest:_____

The rate of the Bond is _____% of the first $_____ and _____% for the next $_____. The total premium for this Bond is $_____.

DRAFT

TRANSACTION AGREEMENT 3

PROJECT LABOR AGREEMENT

DRAFT

APPENDIX I

FORMS OF BONDS

FORM OF PROPOSAL BOND

FORM OF PROPOSAL BOND

KNOW ALL MEN BY THESE PRESENTS, that we [NAME OF PROPOSER], as Principal (hereinafter the "Proposer") and [NAME OF SURETY], a [Corporation, Partnership, LLC, etc.] duly organized under the laws of the State of [_____], as Surety, are held and firmly bound unto the Rockland County Solid Waste Management Authority a/k/a Rockland Green, Rockland County, New York (hereinafter "Rockland Green"), as Obligee, in the sum of [_____] Dollars ($_____) lawful money of the United States of America to be paid to Rockland Green, its successors or assigns, for which payment, well and truly to be made, we bind ourselves, our successors and assigns, jointly and severally, firmly by these presents; and

WHEREAS, the above-named Proposer has submitted or is about to submit to Rockland Green a Proposal to renovate the existing Administrative Headquarters located at 172 Main Street in Nanuet, NY, to provide a new immersive theater and exhibit space, a conference room, an ADA-accessible restroom, upgraded finishes, enhanced lighting, an improved HVAC system, a solar array, an emergency generator, updated exterior finishes, and various site improvements as described in the Request for Proposals for the Renovation of Rockland Green Administrative Headquarters and Construction of an Immersive Theatre Experience located at 172 Main Street in Nanuet, NY (RFP 2025-02), dated February 18, 2025 (the "RFP"), issued by Rockland Green and covered by the Proposal submitted by the Proposer in response thereto, which Proposal is made a part hereof.

NOW, THEREFORE, the Surety hereby understands that if the above-referenced Proposer is selected by Rockland Green as a preferred Proposer, then the Proposer will enter into the Contract and the surety bonds acceptable to Rockland Green ensuring faithful performance of the Contract will be delivered to Rockland Green within the time specified in the RFP, or any extension thereof agreed to in writing by Rockland Green. Surety hereby agrees that if the Proposer shall fail to do so, Surety will pay to Rockland Green, as liquidated damages, the full amount of this bond within thirty (30) calendar days after receipt by Proposer and Surety of written notice of such failure from Rockland Green, which notice shall be given with reasonable promptness, identifying this bond and including a statement of the amount due. Upon execution of the Contract and delivery of the performance bond, this bond shall thereafter become null and void, otherwise to remain in full force and effect unless terminated as hereinafter provided.

It is agreed that this bond shall become effective on the date the Proposal is submitted and will continue in full force and effect for one hundred eighty (180) days from such date of submittal (unless extended for up to an additional one hundred eighty (180) days) or until terminated as hereinafter provided.

If the Proposal is not accepted within the time specified in the RFP, or any extension thereof agreed to in writing by Rockland Green, then after written notice by Rockland Green of such non-acceptance, this bond may be terminated by the Surety or Proposer upon written notice to each other and to Rockland Green by registered mail at least ten (10) days prior to the termination date specified in such notice. Upon the giving of such notice, Surety shall be discharged from all liability under this bond for any act or omission of the Proposer occurring after the date of the notice of non-acceptance.

Any suit or action under this bond shall be commenced only in a court of competent jurisdiction located in the State of New York.

IN WITNESS WHEREOF, Surety and Proposer, intending to be legally bound hereby, do each cause this Proposal bond to be duly executed on its behalf by its authorized officers, agent or representative.

Signed and sealed this _____ day of _____, ____.

SURETY	PROPOSER
[NAME OF SURETY]	[NAME OF PROPOSER]
Name: _____	Name: _____
Signature: _____	Signature: _____
Title: _____	Title: _____

FORM OF PERFORMANCE BOND

FORM OF PERFORMANCE BOND

Bond No. _____

KNOW ALL MEN BY THESE PRESENT, that we _____ with a place of business at _____ as principal (the "Principal"), and _____, a [_____] qualified to do business in the State of New York, with a place of business at _____ as Surety (the "Surety"), are held and firmly bound unto the Rockland County Solid Waste Management Authority a/k/a Rockland Green as Obligee (the "Obligee"), in the sum of *[insert amount and spell out bond penal sum]* lawful money of the United States of America, to be paid to the Obligee, for which payment, well and truly to be made, we bind ourselves, our respective heirs, executors, administrators, successors and assigns, jointly and severally, firmly by these present.

WHEREAS, the Principal has assumed and made a contract with the Obligee, bearing the date of _____, and entitled Contract for the Renovation of Rockland Green Administrative Headquarters and Construction of an Immersive Theatre Experience located 172 Main Street in Nanuet, NY (the "Contract").

NOW THE CONDITIONS of this obligation are such that if the Principal and all Subcontractors or suppliers under said Contract shall well and truly keep and perform all the undertakings, covenants, agreement, terms, and conditions of said Contract on its part to be kept and performed during the original term of said Contract and any extensions thereof that may be granted by the Obligee, with or without notice to the Surety, and during the life and including any guarantee required under the Contract, and shall also well and truly keep and perform all the undertakings, covenants, agreements, terms and conditions of any and all duly authorized modifications, alterations, changes or additions, the obligations of the Surety set forth herein shall become null and void; otherwise such obligations shall remain in full force and virtue.

WHENEVER the Principal shall be declared by the Obligee to be in default under the Contract, the Obligee having performed the Obligee's material obligations thereunder, at the Obligee's option as declared in writing, the Surety may promptly remedy the default whatever it may be or shall promptly perform the Contract in accordance with all of its terms and conditions. To the extent that the Obligee elects to not have the Surety remedy the default nor promptly perform the Contract, the Surety shall make payment to the Obligee up to the Penal Sum of this instrument.

IN THE EVENT the Contract is abandoned by the Principal, or is terminated by the Obligee under the applicable provisions of the Contract, the Surety hereby further agrees that the Surety shall, if requested in writing by the Obligee, promptly take all such actions as are necessary to complete said Contract in accordance with its terms and conditions. To the extent that the Obligee elects not to require the Surety to take all such actions as are necessary to complete said Contract, the Surety shall make payment to the Obligee up to the Penal Sum of this instrument.

IN WITNESS WHEREFORE, the Principal and Surety have hereto set their hands and seals this _____ day of _____, 2025.

PRINCIPAL SURETY

_____ _____

_____ _____

[Name and Seal] [Attorney-In-Fact][Seal]

_____ _____

[Title] [Address]

_____

[Phone]

Attest:_____ Attest:_____

The rate for this Bond is _____% of the first $_____ and _____% for the next $_____.

The total premium for this Bond is $_____.

[*END OF PERFORMANCE BOND*]

FORM OF LABOR AND MATERIALS PAYMENT BOND

FORM OF LABOR AND MATERIALS PAYMENT BOND

Bond No. _____

KNOW ALL MEN BY THESE PRESENT, that we [ ] with a place of business at as principal (the "Principal"), and _____, a [_____ _____] qualified to do business in the State of New York, with a place of business at _____ as Surety (the "Surety"), are held and firmly bound unto Rockland County Solid Waste Management Authority a/k/a Rockland Green as Obligee (the "Obligee"), in the sum of [Dollars ($)] lawful money of the United States of America, to be paid to the Obligee, for which payment, well and truly to be made, we bind ourselves, our respective heirs, executors, administrators, successors and assigns, jointly and severally, firmly by these present.

WHEREAS, the Principal has assumed and made a contract with the Obligee, bearing the date of [_____], and entitled Contract for the Renovation of Rockland Green Administrative Headquarters and Construction of an Immersive Theatre Experience located 172 Main Street in Nanuet, NY (the "Contract").

NOW, THE CONDITIONS of this obligation are such that if the Principal and all Subcontractors under said Contract shall promptly pay for all labor performed or furnished and for all materials and equipment used or employed in said Contract (including any amendments or modifications thereto), notice to the Surety of such amendments or modifications being hereby waived, and defends, indemnifies and holds harmless the Obligee from claims, demands, liens or suits by any person or entity seeking payment for labor, materials or equipment furnished for use in performance of the Contract, then this obligation shall become null and void; otherwise, it shall remain in full force and virtue.

The Surety's obligation to the Obligee under this Bond shall arise after the Obligee provides notice to the Principal and Surety of claims, demands, liens or suits against the Obligee or the Obligee's property by any person or entity seeking payment for labor, materials or equipment furnished for use in the performance of the Contract.

The Surety shall promptly and at the Surety's expense defend, indemnify and hold harmless the Obligee against any duly tendered claim, demand, lien or suit against the Obligee or the Obligee's property.

IN WITNESS WHEREFORE, the Principal and Surety have hereto set their hands and seals this _____day of _____, 2025.

PRINCIPAL	SURETY
_____	_____
_____	_____
[Name and Seal]	[Name and Seal]
_____	_____
[Title]	[Title]
_____	_____

[Address]
_____
[Phone]
Attest:_____

[Address]
_____
[Phone]
Attest:_____

The rate of the Bond is _____% of the first $_____ and _____% for the next $_____. The total premium for this Bond is $_____.

APPENDIX J

SITE VISIT PROTOCOL

APPENDIX J

SITE VISIT PROTOCOL

I. Rockland Green is soliciting Proposals for Renovation of Rockland Green Administrative Headquarters and Construction of an Immersive Theatre Experience (the "RFP"). Rockland Green has established a date for a mandatory Site visit and will accommodate Proposer's reasonable requests for additional access to the Site, in addition to the mandatory Site visit. During every visit to the Site, all Proposers, including any representative, agent, consultant, Subcontractor, Affiliate or interested party, is required to comply with this Site Visit Protocol during access to and inspection of the Site. Failure to do so may result in the rejection of a Proposal.

II. Protocol:

- The mandatory Site visit and meeting will take place on the date and time indicated in the RFP.

- Potential Proposers must notify Ryan Montal, Confidential Secretary to the Executive Director at rmontal@rocklandgreen.com in writing at least three days prior to the mandatory Site visit and meeting to indicate the total number of individuals representing such potential Proposer that will be in attendance at the Site visit and meeting and their names.

- Any individuals representing the Proposer at the Site visit and meeting must be employees or principals of the Proposer. A Proposer may not use a surrogate as its representative at the mandatory Site visit and meeting.

- All representatives from a Proposer must attend the same Site visit.

- Rockland Green will designate specific individuals to conduct a tour of the facility and answer questions.

- The Proposer, including any member of the team, representative, agent, consultant, Subcontractor, Affiliate or interested party, shall not engage in any communication concerning this RFP with a member of Rockland Green, except the individuals specifically identified by Rockland Green as allowed to guide Site visits and answer questions from the Proposer.

- The Proposer's team members must be dressed appropriately for Site visits, including correct footwear and hard hats. Any additional safety equipment required would be supplied by Rockland Green.

- Any request for information and clarifications regarding the RFP shall be submitted in writing. No oral information given by a Rockland Green team member during a Site visit shall be binding. Rockland Green is not responsible

for any oral explanation given during a Site visit.

- Proposers must comply with any Rockland Green, Rockland County Board of Health or other applicable policies or orders with regard to any public health protocols that may be required during Site visits.

III. Acknowledgement

The Proposer acknowledges that this Site Visit Protocol is part of the procurement process. The Proposer understands that failure to comply with the requirements may result in the rejection of its Proposal.

_____
Name of Proposer

_____
Authorized Representative

_____
Title